STD.ASME B16.49-ENGL 2000 ■ 0759670 0618546 206 ■

ASME B16.49-2000

FACTORY-MADE WROUGHT STEEL BUTTWELDING INDUCTION BENDS FOR TRANSPORTATION AND DISTRIBUTION SYSTEMS

AN AMERICAN NATIONAL STANDARD



The American Society of
Mechanical Engineers

Copyright ASME International
Provided by IHS under license with ASME
No reproduction or networking permitted without license from IHS

Not for Resale



The American Society of Mechanical Engineers

AN AMERICAN NATIONAL STANDARD

FACTORY-MADE WROUGHT STEEL BUTTWELDING INDUCTION BENDS FOR TRANSPORTATION AND DISTRIBUTION SYSTEMS

ASME B16.49-2000

Copyright ASME International
Provided by IHS under license with ASME
No reproduction or networking permitted without license from IHS
Not for Resale

Date of Issuance: September 11, 2000

The 2000 edition of this Standard is being issued with an automatic addenda subscription service. The use of addenda allows revisions made in response to public review comments or committee actions to be published as necessary; revisions published in addenda will become effective 6 months after the Date of Issuance of the addenda. The next edition of this Standard is scheduled for publication in 2005.

ASME issues written replies to inquiries concerning interpretations of technical aspects of this Standard. The interpretations will be included with the above addenda service.

ASME is the registered trademark of The American Society of Mechanical Engineers.

This code or standard was developed under procedures accredited as meeting the criteria for American National Standards. The Standards Committee that approved the code or standard was balanced to assure that individuals from competent and concerned interests have had an opportunity to participate. The proposed code or standard was made available for public review and comment that provides an opportunity for additional public input from industry, academia, regulatory agencies, and the public-at-large.

ASME does not "approve," "rate," or "endorse" any item, construction, proprietary device, or activity.

ASME does not take any position with respect to the validity of any patent rights asserted in connection with any items mentioned in this document, and does not undertake to insure anyone utilizing a standard against liability for infringement of any applicable letters patent, nor assume any such liability. Users of a code or standard are expressly advised that determination of the validity of any such patent rights, and the risk of infringement of such rights, is entirely their own responsibility.

Participation by federal agency representative(s) or person(s) affiliated with industry is not to be interpreted as government or industry endorsement of this code or standard.

ASME accepts responsibility for only those interpretations of this document issued in accordance with the established ASME procedures and policies, which precludes the issuance of interpretations by individuals.

No part of this document may be reproduced in any form,
in an electronic retrieval system or otherwise,
without the prior written permission of the publisher.

The American Society of Mechanical Engineers
Three Park Avenue, New York, NY 10016-5990

Copyright © 2000 by
THE AMERICAN SOCIETY OF MECHANICAL ENGINEERS
All Rights Reserved
Printed in U.S.A.

Copyright ASME International
Provided by IHS under license with ASME
No reproduction or networking permitted without license from IHS

Not for Resale

FOREWORD

In 1993, members of the ASME B31.8 Code for Pressure Piping Gas — Transmission and Distribution Systems committee approached the B16 committee to develop a standard that covers pipeline bends produced by the induction bending process.

Subcommittee F reviewed the request and identified that no current specification covered this product to the satisfaction of the users. It was also determined that this Standard would need to be more performance based than most other B16 Standards, which are normally product standards with set dimensional requirements.

At the 1994 meeting of Subcommittee F, the project to develop a standard was accepted. Through the cooperation of producers and users familiar with the process, and with approval by the Standards Committee and ASME, ASME B16.49-2000 received approval as an American National Standard on April 25, 2000.

Copyright ASME International
Provided by IHS under license with ASME
No reproduction or networking permitted without license from IHS
Not for Resale

ASME B16 COMMITTEE
Standardization of Valves, Flanges, Fittings, and Gaskets

(The following is the roster of the Committee at the time of approval of this Standard.)

OFFICERS

W. N. McLean, *Chair*
H. R. Sonderegger, *Vice Chair*
P. Reddington, *Secretary*

COMMITTEE PERSONNEL

R. W. Barnes, Anric Enterprises, Ontario, Canada
R. R. Brodin, Fisher Controls International, Inc., Marshalltown, Iowa
M. A. Clark, Nibco, Inc., Elkhart, Indiana
A. Cohen, Consultant, Albuquerque, New Mexico
C. E. Floren, Mueller Co., Decatur, Illinois
D. R. Frikken, Monsanto Co., St. Louis, Missouri
G. A. Jolly, Edward Vogt Valve Co., Jeffersonville, Indiana
W. G. Knecht, BW/IP International, Williamsport, Pennsylvania
R. Koester, The William Powell Co., Cincinnati, Ohio
W. N. McLean, Newco Valves, Palos Park, Illinois
M. L. Nayyar, Bechtel Power Corp., Frederick, Maryland
R. A. Schmidt, Ladish Co., Russellville, Arkansas
H. R. Sonderegger, TYCO Flow Control, Cranston, Rhode Island
W. M. Stephan, Flexitallic, Inc., Mount Laurel, New Jersey
T. F. Stroud, Ductile Iron Pipe Research Association, Birmingham, Alabama
M. D. Wasicek, American Bureau of Shipping, Houston, Texas
D. A. Williams, Southern Company Services, Birmingham, Alabama
L. A. Willis, Dow Chemical Co., Freeport, Texas
W. R. Worley, Union Carbide Corp., South Charleston, West Virginia

SUBCOMMITTEE F — STEEL THREADED AND WELDING FITTINGS

G. A. Jolly, *Chair,* Edward Vogt Valve Co., Jeffersonville, Indiana
S. J. Rossi, *Secretary,* The American Society of Mechanical Engineers, New York, New York
P. A. Benavides, Tube Forgings of America, Inc., Portland, Oregon
G. A. Cuccio, Capitol Manufacturing Co., Crowley, Louisiana
J. P. Ellenberger, WFI International, Inc., Houston, Texas
D. R. Frikken, Solutia, Inc., Gerald, Missouri
R. E. Johnson, Consultant, Gibsonia, Pennsylvania
R. C. Lafferty, Penna Machine Works, Inc., Aston, Pennsylvania
D. H. Monroe, Consultant, Birmingham, Alabama
C. H. Moore, Consultant, Arkadelphia, Arkansas
R. A. Schmidt, Ladish Co., Russellville, Arkansas
H. R. Sonderegger, TYCO Flow Control, Cranston, Rhode Island
L. A. Willis, Dow Chemical Co., Freeport, Texas
W. R. Worley, Union Carbide Corp., South Charleston, West Virginia

Previous page is blank.

Copyright ASME International
Provided by IHS under license with ASME
No reproduction or networking permitted without license from IHS
Not for Resale

CORRESPONDENCE WITH THE B16 COMMITTEE

General. ASME Standards are developed and maintained with the intent to represent the consensus of concerned interests. As such, users of this Standard may interact with the Committee by requesting interpretations, proposing revisions, and attending Committee meetings. Correspondence should be addressed to:

Secretary, B16 Main Committee
The American Society of Mechanical Engineers
Three Park Avenue
New York, NY 10016-5990

Proposing Revisions. Revisions are made periodically to the Standard to incorporate changes that appear necessary or desirable, as demonstrated by the experience gained from the application of the Standard. Approved revisions will be published periodically.

The Committee welcomes proposals for revisions to this Standard. Such proposals should be as specific as possible, citing the paragraph number(s), the proposed wording, and a detailed description of the reasons for the proposal, including any pertinent documentation.

Interpretations. Upon request, the B16 Committee will render an interpretation of any requirement of the Standard. Interpretations can only be rendered in response to a written request sent to the Secretary of the B16 Main Committee.

The request for interpretation should be clear and unambiguous. It is further recommended that the inquirer submit his/her request in the following format:

Subject:	Cite the applicable paragraph number(s) and the topic of the inquiry.
Edition:	Cite the applicable edition of the Standard for which the interpretation is being requested.
Question:	Phrase the question as a request for an interpretation of a specific requirement suitable for general understanding and use, not as a request for an approval of a proprietary design or situation. The inquirer may also include any plans or drawings, which are necessary to explain the question; however, they should not contain proprietary names or information.

Requests that are not in this format will be rewritten in this format by the Committee prior to being answered, which may inadvertently change the intent of the original request.

ASME procedures provide for reconsideration of any interpretation when or if additional information that might affect an interpretation is available. Further, persons aggrieved by an interpretation may appeal to the cognizant ASME Committee or Subcommittee. ASME does not "approve," "certify," "rate," or "endorse" any item, construction, proprietary device, or activity.

Attending Committee Meetings. The B16 Main Committee regularly holds meetings, which are open to the public. Persons wishing to attend any meeting should contact the Secretary of the B16 Main Committee.

Previous page is blank.

Copyright ASME International
Provided by IHS under license with ASME
No reproduction or networking permitted without license from IHS
Not for Resale

CONTENTS

Foreword iii
Committee Roster v
Correspondence With the B16 Committee vii

1 Scope and Definitions 1
2 Pressure Ratings 2
3 Size 2
4 Marking 3
5 Material 4
6 Material for Bends Containing Welds 4
7 Chemical Composition 4
8 Material Properties 5
9 Heat Treatment 6
10 Qualification Bend 6
11 Test Requirements 7
12 Dimensional Requirements 8
13 Inspection 9
14 Certification 9
15 Supplementary Requirements 9

Figures
1 Bend Dimensional Terms 3
2 Test Specimen Locations and Orientations 8
3 Measurement of Bend Angle and Out-of-Squareness 10

Tables
1 Maximum Limits of Chemical Elements That May Be Used 4
2 Compliance Factor, *F*, Carbon Equivalent Formula 5
3 Tensile Properties 6

Mandatory Annex
I References 13

Nonmandatory Annex
A Quality System Program 15

Previous page is blank.

Copyright ASME International
Provided by IHS under license with ASME
No reproduction or networking permitted without license from IHS
Not for Resale

FACTORY-MADE WROUGHT STEEL BUTTWELDING INDUCTION BENDS FOR TRANSPORTATION AND DISTRIBUTION SYSTEMS

1 SCOPE AND DEFINITIONS

1.1 General

This Standard covers design, material, manufacturing, testing, marking, and inspection requirements for factory-made pipeline bends of carbon steel materials having controlled chemistry and mechanical properties, produced by the induction bending process, with or without tangents. This Standard covers induction bends for transportation and distribution piping applications (e.g., ASME B31.4, B31.8, and B31.11). Process and power piping have differing requirements and materials that may not be appropriate for the restrictions and examinations described herein, and therefore are not included in this Standard.

1.2 Manufacturing Process

This process utilizes induction heating to heat a narrow band 360 deg around pipe at the point of bending as the pipe is being pushed through the inductor coil at a constant velocity. After the material passes through the coil it may be cooled by forced air or water spray, or it may be allowed to cool in still air. Bends in any producible wall thickness and diameter are covered. Induction bends covered by this Standard may be produced from seamless pipe, welded pipe, or cylinders.

1.3 Fabricated Bends

Larger angle bends obtained by girth welding two or more smaller angle bends together are considered pipe fabrications and as such are not within the scope of this Standard.

1.4 Standard Units

The values stated in either metric units or U.S. customary units are to be regarded separately as standard. Within the text, customary values are shown in parentheses. The values stated in each system are not exact equivalents; therefore, each system must be used independently of the other. Combining values from two systems may result in nonconformance with the Standard.

1.5 References

Standards and specifications adopted by reference in this Standard are shown in mandatory Annex I. It is not practical to identify the specific edition of each Standard and specification in the individual references. Instead, the specific edition reference is identified in Annex I. A product made in conformance with a prior edition of reference Standards and in all other respects conforming to this Standard will be considered to be in compliance.

1.6 Codes and Regulations

A bend used under the jurisdiction of a referencing code or a governmental regulation is subject to any limitation of that code or regulation. This includes any maximum temperature limitation or rule governing the use of a material at low temperature.

1.7 Service Conditions

Criteria for selection of bend material for a particular fluid service are not within the scope of this Standard.

1.8 Convention

In conformance with this Standard, the convention for fixing significant digits where limits, maximum and minimum values, are specified shall be "rounded off" as defined in ASTM Practice E 29. This requires that an observed or calculated value shall be rounded off to the nearest unit in the last right-hand digit used for expressing the limit. Decimal values and tolerance do not imply a particular method of measurement.

1.9 Quality Systems

Requirements relating to the manufacturers' quality system programs are described in nonmandatory Annex A.

Copyright ASME International
Provided by IHS under license with ASME
No reproduction or networking permitted without license from IHS
Not for Resale

1.10 Glossary

bend qualification procedure: document that specifies the properties of the starting pipe, the equipment to be used, the bending parameters, the qualification bend test results, the post-bend heat-treat equipment and cycle, the nondestructive testing procedures, and the weld end bevel details used for the manufacture of the bends.

cylinder: a pipe produced by the bender by rolling and welding the plate in the facility (or by subcontracting) as opposed to pipe produced in accordance with a recognized specification.

extrados: the outside arc of the bend.

intrados: the inside arc of the bend.

minimum (design) wall thickness: the wall thickness specified on the fabrication drawing or computed in accordance with the piping code as the minimum acceptable for the temperature and pressure application.

nominal (design) wall thickness: the wall thickness specified on the order or marked on the bend.

qualification bend: a bend segment produced and used to qualify the bending process to achieve the desired properties when tested.

transition zone: the area, at the tangent points of a bend, that covers the change (transition) from unheated to heated material.

NOTE: The terms *bender* and *manufacturer* are used interchangeably in this Standard.

2 PRESSURE RATINGS

2.1 Basis of Ratings

The allowable internal pressure rating for bends designed in accordance with this Standard shall not exceed that which is calculated for straight seamless pipe (or for pipe welded with a joint efficiency factor of 1.0) of equivalent material (as shown by comparison of composition and mechanical properties in the respective material specifications) in accordance with the rules established in the applicable sections of the referencing code for pressure piping. For these calculations, applicable data for the nominal size, nominal wall thickness, and material equivalent to that of the bend material shall be used. Nominal size, nominal wall thickness, and material identity markings on the bend may be used in lieu of pressure rating markings.

2.2 Design of Bends

The required internal pressure design thickness at the intrados (inside radius) of the bend shall be determined in accordance with Eq. 1 of this Standard. The thickness at the neutral axis (see Fig. 1) and on the extrados (outer radius) of the bend shall be no less than the mating pipe design thickness. The thickness of the bend shall vary in a relatively uniform manner from the intrados to the neutral axis as long as the wall thickness meets the minimum calculation in accordance with Eq. 2. If the variation is not uniform, the region is considered to be in conformance if the wall thickness at intermediate points is checked and found to be in accordance with Eq. 2. See Fig. 1.

$$T_I \geq \left(\frac{4(R/D_o) - 1}{4(R/D_o) - 2} \right) t \tag{1}$$

$$T_\phi \geq \left(\frac{4(R/D_o) + \sin \phi}{4(R/D_o) - 2 \sin \phi} \right) t \quad \text{for } -180 \text{ deg} \leq \phi \leq 0 \text{ deg} \tag{2}$$

$$T_\phi \geq 0.9t \quad \text{(see para. 12.3)} \quad \text{for } 0 \text{ deg} \leq \phi \leq 180 \text{ deg} \tag{3}$$

where

R = centerline radius
D_o = nominal outside diameter
T_I = minimum required thickness at the intrados
T_ϕ = minimum required wall thickness at location ϕ
ϕ = −90 deg at the intrados, and the neutral axis is 0 deg or −180 deg (see Fig. 1)
t = nominal design wall thickness (see para. 2.1)

3 SIZE

The diameter of bends shall be identified by the nominal pipe size as defined in ASME B36.10M (e.g., NPS 24). Alternatively or in addition, the marking may include the nominal size as defined in ISO 6708, which consists of the letters *DN* followed by a dimensionless whole number, which is indirectly related to the physical size, in millimeters, of the outside diameter of pipe to which the bend is intended to be welded (e.g., DN 600).

Copyright ASME International
Provided by IHS under license with ASME
No reproduction or networking permitted without license from IHS

Not for Resale

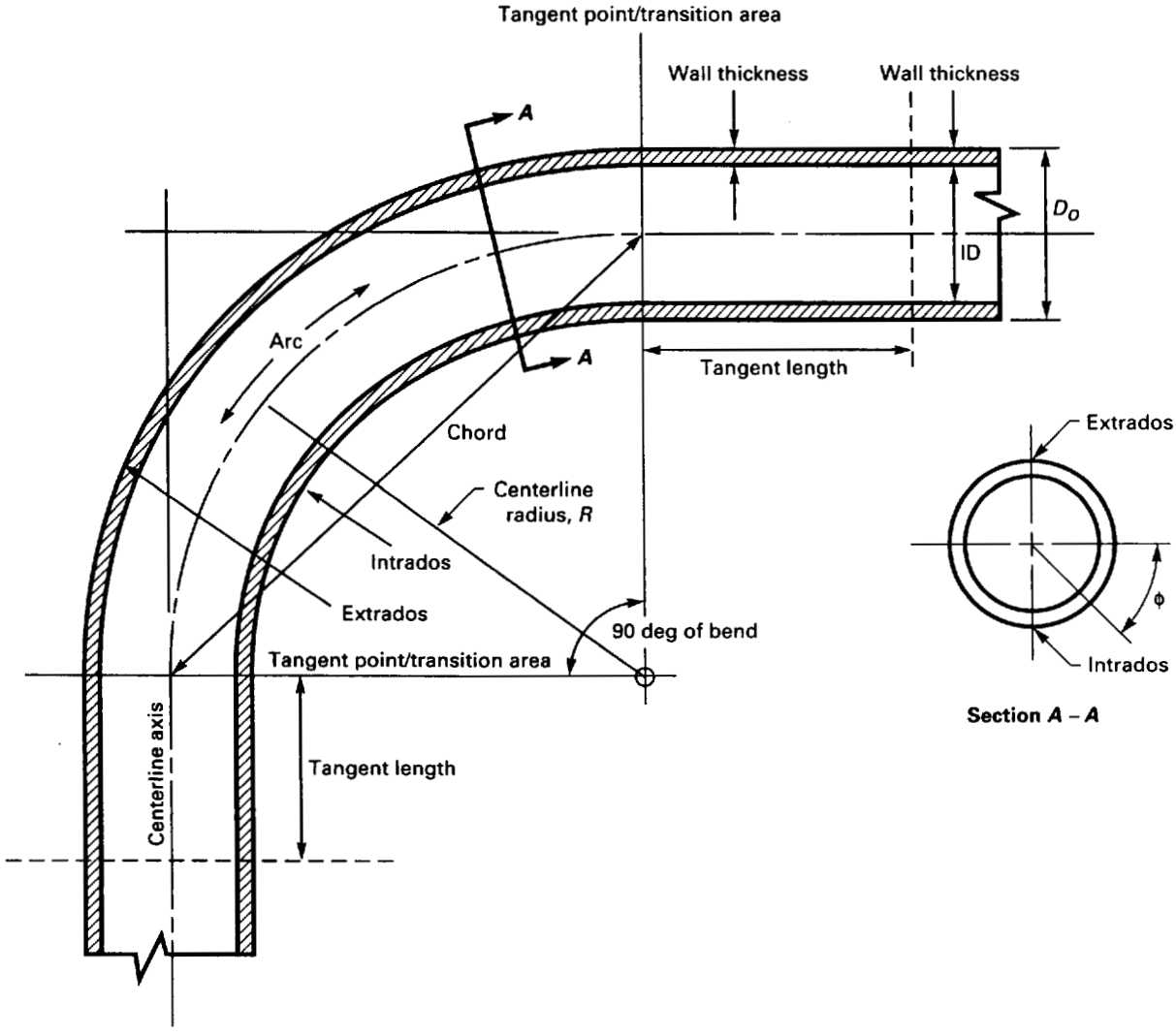

FIG. 1 BEND DIMENSIONAL TERMS

4 MARKING

4.1 Standard Marking

Each bend shall be marked on the outside surface within 300 mm (12 in.) of one end to show the following:

(a) manufacturer's name or trademark
(b) heat number or manufacturer's heat identification
(c) material grade symbol (see Table 3)
(d) B16.49
(e) nominal size
(f) nominal wall thickness
(g) bend radius
(h) bend angle
(i) post-bending heat-treatment condition (see para. 9.3)
(j) supplementary requirements (if applicable)

In addition, each bend shall be paint stenciled with the same information in 25 mm (1 in.) or larger letters on the inside surface within 150 mm (6 in.) of each end, except for NPS 12 (DN 300) or smaller, which only requires outside surface markings. Marking materials shall not adversely affect the bend material or coating. The purchaser may specify that paint marking on the inside surface is not permitted.

4.2 Depth of Stamping

Where steel stamps are used, care shall be taken so that the stamping is not so deep or so sharp as to

Copyright ASME International
Provided by IHS under license with ASME
No reproduction or networking permitted without license from IHS
Not for Resale

TABLE 1 MAXIMUM LIMITS OF CHEMICAL ELEMENTS THAT MAY BE USED

Element	Symbol	Max., %
Carbon	C	0.30
Manganese	Mn	1.60 [Note (1)]
Phosphorus	P	0.025
Sulfur	S	0.015
Silicon	Si	0.50
Chromium	Cr	0.30
Molybdenum	Mo	0.25
Vanadium	V	0.10
Copper	Cu	0.50
Nickel	Ni	1.00
Titanium	Ti	0.05
Niobium	Nb (Cb)	0.10
Boron	B	0.0010

GENERAL NOTE: The chemical requirements of this Table are not intended to represent the composition of any heat of steel, but to record the maximum permissible amounts of individual elements.

NOTE:

(1) For Grades P483 and higher for each reduction of 0.01% below the specified maximum carbon content, an increase of 0.05% above the maximum manganese content is permissible, up to a maximum of 2.00%.

cause cracking, or to reduce the wall thickness of the bend below the minimum allowed.

4.3 Compliance

Marking B16.49 on the bend designates that the bend was manufactured in conformance with ASME B16.49. Adding the prefix "ASME" is optional.

5 MATERIAL

5.1 Starting Materials

Bends covered by this Standard shall be produced from carbon steel pipe or cylinders having a chemistry in conformance with Table 1. Pipe may be furnished by the purchaser or supplied by the manufacturer. Starting pipe shall be seamless, submerged arc welded, or electric resistance welded. Helically welded pipe is not allowed due to the more complicated qualification requirements. Starting material shall be free from low-melting temperature metals, cracks, nicks, gouges, waves, buckles, or other such surface contamination defects that may inhibit successful completion of a bend.

5.1.1 Contamination. Contamination of pipe surfaces before or during bending by low melting temperature metals (i.e., copper, brass, zinc/galvanized, aluminum, etc.) can have serious effects on the bending process and the finish bend properties. Contact with such metals shall not be allowed.

5.1.2 Surface Condition. Prior to bending, material Grades P359 and higher shall be grit blasted to a commercial finish (SSPC SP-6) as a minimum on those sections to be bent.

6 MATERIAL FOR BENDS CONTAINING WELDS

6.1 Longitudinal Weld Seams

6.1.1 Seam welds in pipe made to an API, ASTM, or CSA specification must meet welding and nondestructive examination (NDE) requirements of that specification.

6.1.2 Other pipe or cylinders, not manufactured to the above specifications, shall be made by welders, welding operators, and welding procedures qualified under the provisions of Section IX of the ASME Boiler and Pressure Vessel Code (BPV). Before bending, 100% of each weld seam shall be radiographed in accordance with ASME Section VIII, Division 1, para. UW-51, and shall meet the acceptance criteria specified therein.

6.1.3 The longitudinal weld seam should be located on the neutral axis (ϕ = 0 deg or 180 deg in Fig. 1). When this is not possible, the weld seam shall be located not more than 15 deg from the neutral axis.

6.2 Girth Welds

Bending through a girth weld shall not be allowed unless agreed upon between the purchaser and manufacturer.

7 CHEMICAL COMPOSITION

The chemical composition of each heat[1] of material furnished to this Standard, as determined by a product analysis, shall be in accordance with Table 1. Each element specified in Table 1 shall be tested for and reported on the material test report required in para. 14. The carbon equivalent (CE) shall not exceed 0.40% as computed by the following equation:

[1] A heat of material shall consist of all pipe or cylinders from the same manufacturer and produced from a single cycle of a batch melting process.

Copyright ASME International
Provided by IHS under license with ASME
No reproduction or networking permitted without license from IHS
Not for Resale

TABLE 2 COMPLIANCE FACTOR, *F*, CARBON EQUIVALENT FORMULA

Carbon, %	Compliance Factor
<0.06	0.53
0.06	0.54
0.07	0.56
0.08	0.58
0.09	0.62
0.10	0.66
0.11	0.70
0.12	0.75
0.13	0.80
0.14	0.85
0.15	0.88
0.16	0.92
0.17	0.94
0.18	0.96
0.19	0.97
0.20	0.98
0.21	0.99
>0.21	1.00

$$CE = C + F\left(\frac{Mn}{6} + \frac{Si}{24} + \frac{Cu}{15} + \frac{Ni}{20} + \frac{Cr + Mo + Nb + V}{5} + 5B\right)$$

where F is a compliance factor that is dependent on the carbon content and is given in Table 2.

8 MATERIAL PROPERTIES

The properties of the bend, as determined for each lot[2], shall be in accordance with the ordered grade listed in Table 3.

8.1 Tensile Properties

The tensile properties shall be determined for the qualification bend in accordance with ASTM A 370. The yield-to-tensile ratio shall not exceed 0.90, except for Grade P483 and higher, for which the ratio shall not exceed 0.93. When the strength of the bend does not meet the ordered strength, the manufacturer may provide, with purchaser approval, bends of comparable strength to the design pipe. The thickness of the bend shall be at least equal to the specified design pipe thickness multiplied by the ratio of the specified minimum yield strength of the pipe and the minimum tested yield strength of the bend. For bends from welded pipe of NPS 8 (DN 200) or larger, a transverse weld tensile test in the final heat-treat condition shall he conducted to determine the ultimate tensile strength. See para. 11.1.1 for number, location, and orientation of test samples required.

8.2 Fracture Toughness Properties

Notch toughness properties of the bend material in the final heat-treated condition shall be determined on the qualification bend by a set of three transverse, full-size, Charpy V-notch specimens, with or without tapering[3] the ends, in accordance with ASTM A 370. When the material wall thickness does not permit machining full size (10 mm by 10 mm) specimens, the largest size possible of either $^2/_3$ size or $^1/_2$ size shall be substituted. All dimensions other than thickness are the same for full-size specimens. Specimens shall be taken with the axis transverse to the longitudinal axis of the bend. If material wall thickness does not allow at least a $^1/_2$ size Charpy specimen, no impact testing is required. Specimens shall be tested at −10°C (+14°F) or lower, unless otherwise specified by the purchaser (see para. 15.4), and shall achieve an average shear area for all specimens of at least 50%, with no one specimen less than 40%. In addition, all specimens, regardless of size, shall exhibit a minimum absorbed energy value of 27 J (20 ft-lbf) for Grade P386 and lower, and a minimum of 54 J (40 ft-lbf) for grades higher than P386. Weld metal shall meet an absorbed energy value of 27 J (20 ft-lbf) minimum for all grades. See para. 11.1.2 for location of testing samples required.

8.3 Hardness Testing

Hardness tests shall be performed in accordance with ASTM A 370 on the bend as required in para. 11.1.4. To verify uniformity in the bending process, all production bends shall be tested for hardness in the same locations as the qualification bend. The corresponding areas shall have hardness readings in the same quadrant around the circumference within the same range as the qualification bend, with no reading equating to a tensile strength less than that required in Table 3 for the material grade marked on the bend. The type of portable hardness tester used on production bends shall be approved by the purchaser. All testing shall be conducted in the final heat-treated condition. No hardness measurement shall exceed the maximum specified in Table 3.

[2] A lot shall consist of all bends from the same heat of material (within the essential variables allowed in para. 10.1) given the same heat treatment (unless waived by the purchaser; see para. 9) in a controlled furnace within a range of ±15°C (±25°F).

[3] When tapered-end specimens are used, the tapering shall not reduce the specimen length on one side below 28 mm (1.1 in.) or the end thickness below one-half the nominal specimen thickness.

Copyright ASME International
Provided by IHS under license with ASME
No reproduction or networking permitted without license from IHS

Not for Resale

TABLE 3 TENSILE PROPERTIES

Grade and Symbol	Tensile Properties			Hardness	
	Min. Yield Strength, MPa (ksi)	Min. Tensile Strength, MPa (ksi)	Elongation, Min. %	Max. HB [Note (1)]	Max. HRC [Note (2)]
P241	241 (35)	414 (60)	20	238	22
P290	290 (42)	414 (60)	20	238	22
P317	317 (46)	434 (63)	20	238	22
P359	359 (52)	455 (66)	20	238	22
P386	386 (56)	490 (71)	20	238	22
P414	414 (60)	517 (75)	20	238	22
P448	448 (65)	531 (77)	18	238	22
P483	483 (70)	565 (82)	16	247	24
P552	552 (80)	621 (90)	16	247	24

GENERAL NOTE: Intermediate grades may be purchased subject to agreement between the purchaser and manufacturer.
NOTES:
(1) HB (Hardness Brinell) is the primary number.
(2) HRC (Hardness Rockwell C) is an approximation based on ASTM E 140 hardness conversion.

9 HEAT TREATMENT

9.1 Type

Unless otherwise specified by the purchaser, each bend shall be heat treated after bending by one or more of the following methods:

(a) Stress Relieve or Temper. Uniformly heat between 480°C (900°F) and 675°C (1,250°F) and hold at temperature for at least 30 min per 25 mm (1 in.) of thickness at temperature, but no less than 30 min.

(b) Normalize. Heat above the transformation temperature range and hold at temperature for a minimum of 20 min per 25 mm (1 in.) of thickness, but not less than 20 min, and allow to cool in still air.

(c) Quench and Temper. Heat above the transformation temperature range and hold at temperature for a minimum of 20 min per 25 mm (1 in.) of thickness and direct quench in either water, oil, or a synthetic quenchant. Reheat to temper as defined above. Quench facilities shall be of sufficient size and shall be equipped to ensure proper and uniform cooling.

9.2 Equipment

All furnace heat-treatment equipment shall have a recording device that is calibrated at least quarterly. Heat-treat furnaces shall be surveyed annually, or at a shorter interval, as necessary to maintain uniformity of heat treatment, or thermocouples shall be attached to each furnace load. Thermocouples shall be calibrated at least quarterly. Records shall be kept of furnace surveys, thermocouple calibrations, and if used, thermocouple readings for each furnace load.

9.3 Heat-Treat Designators

Each bend and the material test report (see para. 14) shall be identified with one of the following designators indicating final heat-treat condition:

N = normalize
NT = normalize and temper
SR = stress relieve
QT = quench and temper

10 QUALIFICATION BEND

10.1 Essential Variables

Prior to production bending, a qualification bend shall be made and tested from each heat of material to demonstrate the suitability of the bending procedure to provide a product meeting the required dimensions and material properties. This bend and tangent section shall be of adequate length to obtain all the required test coupons. All bends (qualification and production) shall be completed in a continuous heating cycle without stops or starts, unless such areas are included in the bend procedure qualification testing and found acceptable. Post-bend heating for production bend dimensional corrections is not allowed unless covered in the qualification bend procedure. The procedure qualification shall account for the essential variables required to make a bend. When any of these essential variables change, a new qualification bend must be made. The manufacturer's quality assurance program shall include procedures that ensure that the essential variables are properly controlled. This includes equipment calibration fre-

Copyright ASME International
Provided by IHS under license with ASME
No reproduction or networking permitted without license from IHS
Not for Resale

quency as necessary for control but in no case less than annually. Essential variables are as follows:

Essential Variable	Limits of Variation
Pipe wall thickness	±3 mm (0.12 in)
Bend-radius-to-diameter ratio (R/D_0)	None unless agreed upon with purchaser
Forming velocity	±2.5 mm (0.1 in.) per min
Forming temperature	±25°C (±50°F) from the qualification temperature
Coil design	None
Coolant type	None
Cooling water temperature	±15°C (±25°F)
Flow rate/pressure of coolant	±10% change in flow rate (or equivalent rate in pressure)
Weld seam	15 deg from the neutral axis
Heat treatment	±15°C (±25°F) in holding temperature or any change in procedure
Induction heating power	±5%
Induction heating frequency	±20%

10.2 Records

10.2.1 Bend Qualification Procedure. Each manufacturer shall prepare a written procedure that demonstrates that bends having suitable properties such as strength, ductility, and hardness can be formed by that procedure. These records shall be available for the purchaser's review. Changes in the essential variables shall require a new procedure.

10.2.2 Testing Results. All applicable testing results shall be part of the records.

11 TEST REQUIREMENTS

The testing requirements differ between the qualification bend and the production bends. The following requirements apply in the locations specified. The qualification bend testing shall be conducted on a bend representative of the final heat-treat condition. The production bend tests shall be conducted on each bend in the same final heat-treat condition as that which produced the qualification bend.

11.1 Qualification Bend Requirements

11.1.1 Tensile Testing. Transverse tensile samples for NPS 8 (DN 200) or larger shall be taken from the tangent, the transition zone, and the bend segment at both the intrados and extrados for each lot of material. For sizes smaller than NPS 8 (DN 200), either transverse or longitudinal test specimens shall be used. If the tangents and/or transition zones are not left integral to the bend, no tensile tests are required except on the bend. See Fig. 2.

11.1.2 Fracture Toughness Testing. A set of three transverse Charpy V-notch impact specimens shall be taken from the tangent, the transition zone, and the bend at both the intrados and extrados for each lot of material. If the tangents and/or transition zones are not left integral to the bend, no impact tests are required except on the bend. See Fig. 2.

11.1.3 Weld Testing. The tensile, impact, and hardness tests shall be performed on the pipe or cylinder longitudinal seam weld at the locations shown in Fig. 2. Acceptance criteria shall be as specified in paras. 8.1, 8.2, 8.3, and 11.1.4. Testing of ERW weld seam is impractical and as such is not required by this Standard.

11.1.4 Hardness Testing. The bend shall be tested for hardness in all the same locations as the tensile tests are taken. In addition, a hardness reading shall be taken every 15 deg of the bend at the intrados and extrados. The allowable difference between the minimum and maximum hardness readings within a quadrant around the circumference is 30 Brinell Hardness number, or equivalent, if another testing method is used. See Fig. 2.

11.2 Production Bend Requirements

To demonstrate uniformity between the qualification and production bends, each production bend shall be hardness tested in all the same locations as the qualification bend. In addition, hardness readings shall be taken for each additional 30 deg of arc beyond the qualification bend angle. All values within like quadrants around the circumference shall be within the same range as determined in para. 11.1.4. No readings shall exceed the maximum specified in Table 3, and no reading shall equate to a tensile strength less than the minimum required in Table 3 for the specified grade.

11.3 Testing Results

The bend shall be marked with the appropriate grade symbol of Table 3 based on the test results for all locations meeting the minimum values specified for that grade. If the bend strength is different from the

Copyright ASME International
Provided by IHS under license with ASME
No reproduction or networking permitted without license from IHS
Not for Resale

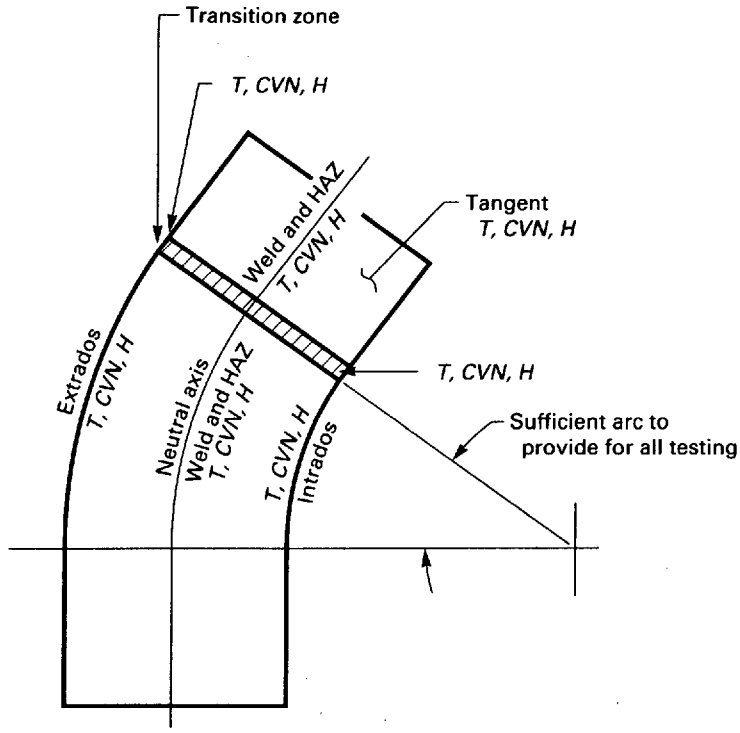

T = Transverse of longitudinal tensile specimen, size dependent

CVN = Transverse Charpy V-notch specimen, set of three

H = Hardness reading, which is required for 15 deg of arc on the qualification bend and for each additional 30 deg on the production bends

FIG. 2 TEST SPECIMEN LOCATIONS AND ORIENTATIONS

mating pipe, and the substitution of wall thickness for yield strength is used in accordance with para. 8.1, both the bend grade and the intended mating pipe grade shall be marked on the bend (i.e., P414/X483).

12 DIMENSIONAL REQUIREMENTS

The dimensional requirements in paras. 12.1 through 12.6 shall be met.

12.1 Ovality

Ovality shall be measured throughout the bend and tangents. The difference between the maximum and minimum outside diameter shall not exceed 2½% of the mating pipe outside diameter within the bend and 1% at the welding end. Purchaser and manufacturer may agree to different ovality tolerance (see para. 15.3).

12.2 Outside Diameter

The outside diameter of each welding end shall be within 1% of the mating pipe outside diameter. The diameter throughout the bend and the remainder of the tangents need only meet the ovality tolerance, unless purchaser and manufacturer agree to other tolerances provided the requirements of para. 15.3 are satisfied.

12.3 Wall Thickness

The wall thickness shall be checked in sufficient locations throughout the bend to ensure that the minimum wall does not fall below 90% of the nominal wall thickness marked on the bend (or below the purchaser specified minimum wall thickness). This below-tolerance allowance does not apply to those areas determined to need reinforcement as a result of design requirements of para. 2.2. Inspection shall be done using

Copyright ASME International
Provided by IHS under license with ASME
No reproduction or networking permitted without license from IHS

Not for Resale

compression wave ultrasonic examination by calibrated equipment that meets a procedure developed by the manufacturer to ensure accurate readings.

12.4 Inside Diameter

12.4.1 Welding Ends. For NPS 36 (DN 900) and smaller, the inside diameter tolerance at the bevel face shall be ±2.5 mm (±0.10 in.). For larger sizes, the inside diameter tolerance shall be ±3 mm (±0.12 in.).

12.4.2 Body. The internal diameter at any location in the bend shall not be less than 97% of the minimum specified mating pipe internal diameter. Proof of conformance to this requirement shall be demonstrated by passing a sphere or other suitable gaging device through the bend without assistance of power equipment.

12.5 End Preparation

Welding ends shall be beveled using ASME B16.25 Fig. 2a or 3a end preparations, unless otherwise specified by the purchaser.

12.6 Bend Dimensional Tolerances

The bend angle, center-to-face dimensions, bend radius, chord lengths, squareness, and bend plane shall be measured and recorded for each bend. The tolerances on the ordered dimensions shall be as follows:

Dimension	Tolerance
Bend angle	±½ deg
Bend radius	±1%
Bend plane	±1 deg
End squareness	
NPS 36 (DN 900) and smaller	2.4 mm (0.09 in.)
Greater than NPS 36 (DN 900)	3 mm (0.12 in.)
Linear dimensions	
NPS 24 (DN 600) and smaller	±5 mm (0.19 in.)
Greater than NPS 24 (DN 600)	±6 mm (0.25 in.)

See Fig. 3, sketches (a) and (b).

13 INSPECTION

13.1 Workmanship and Finish

Prior to inspection, all bends shall be grit blasted or shot blasted clean to a bright metal finish in accordance with SSPC SP-6. All bends shall be visually examined on all accessible surfaces for laminations, cracks, notches, gouges, arc burns, wrinkles, or other injurious defects. Surface imperfections shall be removed by grinding or machining, provided they are not deeper than allowed in para. 12.3. Repair by welding of base metal or weld metal is not permitted without purchaser approval. It is characteristic of the induction process that an upset occurs at each tangent point (transition) of a bend. These are of a cosmetic nature and are not classified as injurious defects.

13.2 Nondestructive Examination

The entire extrados of each bend, from neutral axis to neutral axis including the weld seam, shall be magnetic particle or liquid penetrant examined for injurious defects. The area shall be free of cracks, laps, or laminations. All rounded indications greater than 3 mm (0.12 in.) in any direction shall be classified as imperfections and shall be removed as required in para. 13.1.

13.3 Outside Inspection

An inspector representing the purchaser shall have free access to areas of the manufacturer's facility that involve the manufacture of the ordered bends. All testing records, welding records, etc., shall be available for inspection prior to shipment.

14 CERTIFICATION

A Certified Material Test Report (CMTR) shall be furnished listing as a minimum the following information:

(a) chemical composition (including *CE*)
(b) tensile properties
(c) impact properties
(d) hardness results
(e) heat treatment
(f) bend qualification procedure
(g) welded or seamless
(h) nondestructive examination results
(i) any special tests required on purchase order (paras. 15.2 through 15.8)

15 SUPPLEMENTARY REQUIREMENTS

The supplementary requirements (paras. 15.1 through 15.8) are not applicable to product furnished to this Standard except when specified on the purchase order or otherwise agreed upon. When specified or agreed upon, supplementary requirements shall have the same force as requirements of the mandatory sections (paras. 1 through 14). Each bend shall be marked with the

Copyright ASME International
Provided by IHS under license with ASME
No reproduction or networking permitted without license from IHS
Not for Resale

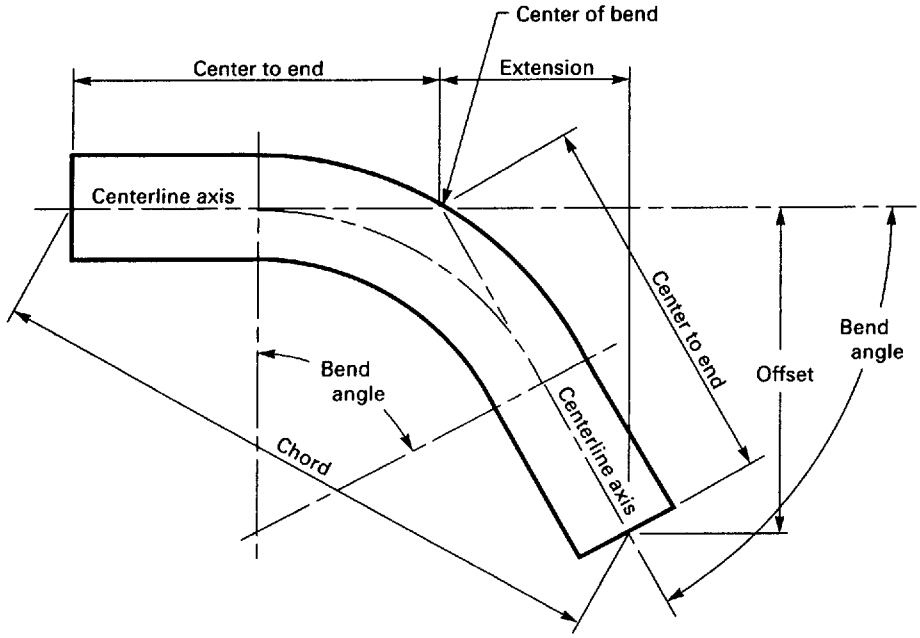

(a) Measurement of Bend Angle by Measurement and Calculation

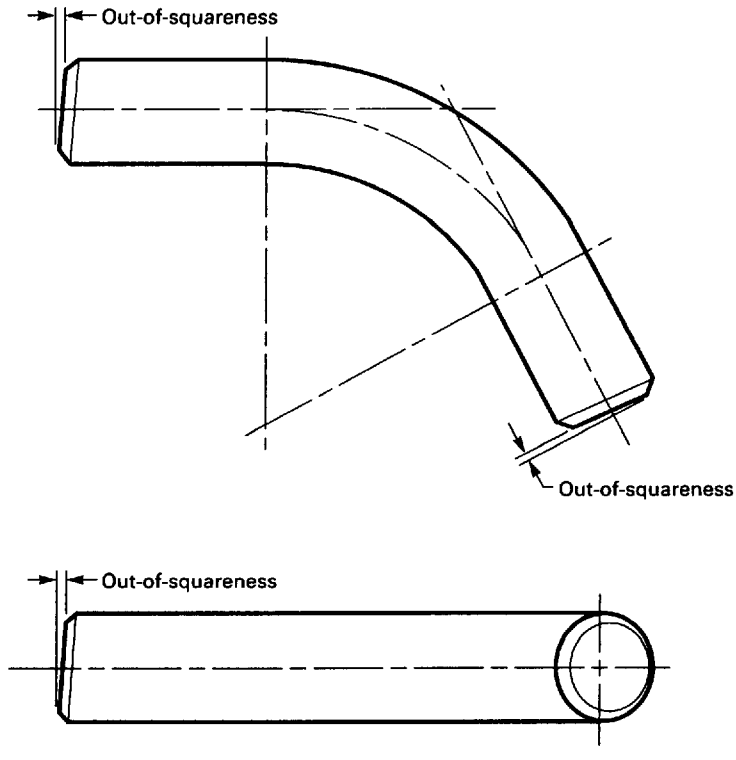

(b) Measurement of Out-of-Squareness

FIG. 3 MEASUREMENT OF BEND ANGLE AND OUT-OF-SQUARENESS

Copyright ASME International
Provided by IHS under license with ASME
No reproduction or networking permitted without license from IHS

Not for Resale

applicable supplementary requirement (e.g., SR 15.1) after the normal marking required in para. 4.1.

15.1 Heat Treatment

If agreed upon, bends can be furnished in an "as-bent" condition. The properties of para. 8 must be met for that heat of material offered.

15.2 Nondestructive Examination

Magnetic particle or liquid penetrant examination shall be performed on the bend area including the intrados, extrados, and weld seam. No cracks are permitted. All other indications will be addressed by agreement between purchaser and manufacturer. All inspections shall be done by personnel, and procedures shall be approved by the purchaser.

15.3 Segmentable Bends

Bends required to be suitable for segmentation shall be provided with an ovality through the bend and tangents of 1% maximum.

15.4 Fracture Toughness

Notch toughness requirements other than those specified shall be by agreement between purchaser and manufacturer. This can include lower test temperatures, greater absorbed energy requirements, or different shear area requirements.

15.5 Sour Gas Applications

Bends required for sour gas applications shall be furnished to meet NACE MR0175.

15.6 Weld Seam Examination: UT

15.6.1 In lieu of radiography, each weld seam in a pipe or starting cylinder may be ultrasonically tested. Acceptance criteria are by agreement between purchaser and manufacturer.

15.6.2 Each bend shall be ultrasonically examined for the full length of weld from bevel end to bevel end after forming and final heat treatment. Testing procedure and acceptance standards shall be as agreed upon between purchaser and manufacturer.

15.7 Weld Seam Examination: RT

Each bend shall have the weld seam 100% radiographed for the full length from bevel end to bevel end after forming and final heat treatment. Testing procedure and acceptance standards shall be as agreed upon between purchaser and manufacturer.

15.8 Chemistries

15.8.1 Alternative chemical requirements and/or lower carbon equivalent shall be as agreed to by purchaser and manufacturer.

15.8.2 Acceptance of previous bend qualification procedures based on similar material chemistries shall be as agreed upon between purchaser and manufacturer. This can include variations to other essential variable requirements if agreed upon.

Copyright ASME International
Provided by IHS under license with ASME
No reproduction or networking permitted without license from IHS

Not for Resale

MANDATORY ANNEX I
REFERENCES

The following is a list of publications referenced in this Standard.

ASME BPV-1998, Boiler and Pressure Vessel Code
ASME B16.25-1997, Buttwelding Ends
ASME B31, Code for Pressure Piping
ASME B36.10M-1996, Welded and Seamless Wrought Steel Pipe

Publisher: The American Society of Mechanical Engineers (ASME), Three Park Avenue, New York, NY 10016; Order Department: 22 Law Drive, Box 2300, Fairfield, NJ 07007

ASTM A 370-95, Standard Test Methods and Definitions for Mechanical Testing of Steel Products
ASTM A 751-95, Standard Test Methods, Practices, and Terminology for Chemical Analysis of Steel Products
ASTM E 29-93a, Practice for Using Significant Digits in Test Data to Determine Conformance With Specifications
ASTM E 140-95, Hardness Conversion Table for Metals

Publisher: The American Society for Testing and Materials (ASTM), 100 Barr Harbor Drive, West Conshohocken, PA 19428

ISO 6708-1980, Pipework Components—Definition and Selection of DN (Nominal Size)
ISO 9000-1994, Quality Systems

Publisher: International Organization for Standardization (ISO), 1 rue de Varembé, Case Postale 56, CH-1211, Genevè 20, Switzerland/Suisse

NACE MR0175-97, Sulfide Stress Cracking Resistant Metallic Materials for Oilfield Equipment

Publisher: National Association of Corrosion Engineers (NACE International), P.O. Box 218340, Houston, TX 77218

SSPC SP-6, Commercial Blast Cleaning

Publisher: The Society for Protective Coatings (SSPC), 40 24th Street, Pittsburgh, PA 15222

Previous page is blank.

Copyright ASME International
Provided by IHS under license with ASME
No reproduction or networking permitted without license from IHS
Not for Resale

NONMANDATORY ANNEX A
QUALITY SYSTEM PROGRAM

The products manufactured in accordance with this Standard shall be produced under a quality system program following the principles of an appropriate standard from the ISO 9000 series.[1] A determination of the need for registration and/or certification of the product manufacturer's quality system program by an independent organization shall be the responsibility of the manufacturer. Detailed documentation demonstrating program compliance shall be available to the purchaser upon request. The product manufacturer is defined as the entity whose name or trademark appears on the product in accordance with the marking or identification requirements of this Standard.

---

[1] The series is also available from the American National Standards Institute (ANSI) and the American Society for Quality Control (ASQC) as American National Standards that are identified by the prefix "Q" replacing the prefix.

Previous page is blank.

Copyright ASME International
Provided by IHS under license with ASME
No reproduction or networking permitted without license from IHS

Not for Resale

AMERICAN NATIONAL STANDARDS FOR PIPING, PIPE FLANGES, FITTINGS, AND VALVES

Scheme for the Identification of Piping Systems A13.1-1996
Pipe Threads, General Purpose (Inch) ..... B1.20.1-1983(R1992)
Dryseal Pipe Threads (Inch) ..... B1.20.3-1976(R1998)
Cast Iron Pipe Flanges and Flanged Fittings: Classes 25, 125, and 250 ..... B16.1-1998
Malleable Iron Threaded Fittings: Classes 150 and 300 ..... B16.3-1998
Gray Iron Threaded Fittings: Classes 125 and 250 ..... B16.4-1998
Pipe Flanges and Flanged Fittings (NPS ½ Through NPS 24) B16.5-1996
Factory-Made Wrought Steel Buttwelding Fittings B16.9-1993
Face-to-Face and End-to-End Dimensions of Valves B16.10-1992
Forged Fittings, Socket-Welding and Threaded B16.11-1996
Cast Iron Threaded Drainage Fittings B16.12-1998
Ferrous Pipe Plugs, Bushings, and Locknuts with Pipe Threads B16.14-1991
Cast Bronze Threaded Fittings: Classes 125 and 250 ..... B16.15-1985(R1994)
Cast Copper Alloy Solder Joint Pressure Fittings ..... B16.18-1984(R1994)
Metallic Gaskets for Pipe Flanges: Ring-Joint, Spiral-Wound, and Jacketed B16.20-1998
Nonmetallic Flat Gaskets for Pipe Flanges B16.21-1992
Wrought Copper and Copper Alloy Solder Joint Pressure Fittings B16.22-1995
Cast Copper Alloy Solder Joint Drainage Fittings — DWV B16.23-1992
Cast Copper Alloy Pipe Flanges and Flanged Fittings: Classes 150, 300, 400, 600, 900, 1500, and 2500 ..... B16.24-1991(R1998)
Buttwelding Ends B16.25-1997
Cast Copper Alloy Fittings for Flared Copper Tubes B16.26-1988
Wrought Steel Buttwelding Short Radius Elbows and Returns B16.28-1994
Wrought Copper and Wrought Copper Alloy Solder Joint Drainage Fittings — DWV B16.29-1994
Manually Operated Metallic Gas Valves for Use in Gas Piping Systems up to 125 psig (Sizes ½ Through 2) B16.33-1990
Valves — Flanged, Threaded, and Welding End B16.34-1996
Orifice Flanges B16.36-1996
Large Metallic Valves for Gas Distribution (Manually Operated, NPS 2½ to 12, 125 psig Maximum) ..... B16.38-1985(R1994)
Malleable Iron Threaded Pipe Unions B16.39-1998
Manually Operated Thermoplastic Gas Shutoffs and Valves in Gas Distribution Systems ..... B16.40-1985(R1994)
Ductile Iron Pipe Flanges and Flanged Fittings, Classes 150 and 300 ..... B16.42-1998
Manually Operated Metallic Gas Valves for Use in House Piping Systems B16.44-1995
Cast Iron Fittings for Sovent® Drainage Systems B16.45-1998
Large Diameter Steel Flanges (NPS 26 Through NPS 60) B16.47-1996
Steel Line Blanks B16.48-1997
Factory-Made Wrought Steel Buttwelding Induction Bends for Transportation and Distribution Systems B16.49-2000
Power Piping B31.1-1998
Fuel Gas Piping (not an ANSI standard) B31.2-1968
Process Piping B31.3-1999
Pipeline Transportation Systems for Liquid Hydrocarbons and Other Liquids B31.4-1998
Refrigeration Piping B31.5-1992
Gas Transmission and Distribution Piping Systems B31.8-1999
Building Services Piping B31.9-1996
Slurry Transportation Piping Systems B31.11-1989
Manual for Determining the Remaining Strength of Corroded Pipelines B31G-1991
Welded and Seamless Wrought Steel Pipe B36.10M-1996
Stainless Steel Pipe ..... B36.19M-1985(R1994)
Self-Operated and Power-Operated Safety-Related Valves Functional Specification Standard ..... N278.1-1975(R1992)

The ASME Publications Catalog shows a complete list of all the Standards published by the Society. For a complimentary catalog, or the latest information about our publications, call 1-800-THE-ASME (1-800-843-2763).

Copyright ASME International
Provided by IHS under license with ASME
No reproduction or networking permitted without license from IHS
Not for Resale

ASME Services

ASME is committed to developing and delivering technical information.At ASME's Information Central, we make every effort to answer your questions and expedite your orders. Our representatives are ready to assist you in the following areas:

ASME Press
Codes & Standards
Credit Card Orders
IMechE Publications
Meetings & Conferences
Member Dues Status
Member Services & Benefits
Other ASME Programs
Payment Inquiries
Professional Development
Short Courses
Publications
Public Information
Self-Study Courses
Shipping Information
Subscriptions/Journals/Magazines
Symposia Volumes
Technical Papers

How can you reach us? It's easier than ever!

There are four options for making inquiries* or placing orders. Simply mail, phone, fax, or E-mail us and an Information Central representative will handle your request.

Mail
ASME
22 Law Drive, Box 2900
Fairfield, New Jersey
07007-2900

Call Toll Free
US & Canada: 800-THE-ASME
(800-843-2763)
Mexico: 95-800-THE-ASME
(95-800-843-2763)
Universal: 973-882-1167

Fax—24 hours
973-882-1717
973-882-5155

E-Mail—
24 hours
Infocentral@asme.org

* Information Central staff are not permitted to answer inquiries about the technical content of this code or standard. Information as to whether or not technical inquiries are issued to this code or standard is shown on the copyright page. All technical inquiries must be submitted in writing to the staff secretary. Additional procedures for inquiries may be listed within.

Copyright ASME International
Provided by IHS under license with ASME
No reproduction or networking permitted without license from IHS
Not for Resale

STD.ASME B16.49-ENGL 2000 ■ 0759670 0618568 977 ■

ISBN 0-7918-2653-8



9 790791 826538



J15600

Copyright ASME International
Provided by IHS under license with ASME
No reproduction or networking permitted without license from IHS

Not for Resale