STD.ASME B16.45-ENGL 1998 ■ 0759670 0615638 349 ■

ASME B16.45-1998

(Revision of ASME B16.45-1987)

CAST IRON FITTINGS FOR SOVENT® DRAINAGE SYSTEMS

AN AMERICAN NATIONAL STANDARD



The American Society of Mechanical Engineers

Copyright ASME International
Provided by IHS under license with ASME
No reproduction or networking permitted without license from IHS
Not for Resale



The American Society of Mechanical Engineers

AN AMERICAN NATIONAL STANDARD

CAST IRON FITTINGS FOR SOVENT® DRAINAGE SYSTEMS

ASME B16.45-1998

(Revision of ASME B16.45-1987)

Copyright ASME International
Provided by IHS under license with ASME
No reproduction or networking permitted without license from IHS
Not for Resale

Date of Issuance: April 30, 1999

The 1998 edition of this Standard is being issued with an automatic addenda subscription service. The use of addenda allows revisions made in response to public review comments or committee actions to be published on a regular yearly basis; revisions published in addenda will become effective six months after the Date of Issuance of the addenda. The next edition of this Standard is scheduled for publication in 2003.

ASME issues written replies to inquiries concerning interpretations of technical aspects of this Standard. The interpretations will be included with the above addenda service.

ASME is the registered trademark of The American Society of Mechanical Engineers.

This code or standard was developed under procedures accredited as meeting the criteria for American National Standards. The Standards Committee that approved the code or standard was balanced to assure that individuals from competent and concerned interests have had an opportunity to participate. The proposed code or standard was made available for public review and comment, which provides an opportunity for additional public input from industry, academia, regulatory agencies, and the public-at-large.

ASME does not "approve," "rate," or "endorse" any item, construction, proprietary device, or activity.

ASME does not take any position with respect to the validity of any patent rights asserted in connection with any items mentioned in this document, and does not undertake to insure anyone utilizing a standard against liability for infringement of any applicable Letters Patent, nor assumes any such liability. Users of a code or standard are expressly advised that determination of the validity of any such patent rights, and the risk of infringement of such rights, is entirely their own responsibility.

Participation by federal agency representative(s) or person(s) affiliated with industry is not to be interpreted as government or industry endorsement of this code or standard.

ASME accepts responsibility for only those interpretations issued in accordance with governing ASME procedures and policies which precludes the issuance of interpretations by individual volunteers.

No part of this document may be reproduced in any form,
in an electronic retrieval system or otherwise,
without the prior written permission of the publisher.

The American Society of Mechanical Engineers
Three Park Avenue, New York, NY 10016-5990

Copyright © 1999 by
THE AMERICAN SOCIETY OF MECHANICAL ENGINEERS
All Rights Reserved
Printed in U.S.A.

Copyright ASME International
Provided by IHS under license with ASME
No reproduction or networking permitted without license from IHS

Not for Resale

FOREWORD

(This Foreword is not part of ASME B16.45-1998)

In the spring of 1920, the American Engineering Standards Committee (later successively named American Standards Association, United States of America Standards Institute, and American National Standards Institute) authorized the organization of a Sectional Committee (later named Standards Committee) on the Standardization of Pipe Flanges for the purpose of unifying and further developing the flanged and threaded fitting standards in force in the United States. Designated as joint sponsors were the American Society of Mechanical Engineers, the Heating and Piping Contractors National Association (later the Mechanical Contractors Association of America), and the Manufacturers Standardization Society of the Valve and Fittings Industry. In 1982, American National Standards Committee B16 was reorganized as the ASME B16 Committee, with ASME operating as sole sponsor under procedures accredited by ANSI.

The Sovent® system for plumbing drainage systems was developed in Switzerland, in 1961, by Mr. Fritz Sommer. Patent rights for the United States, where the system is finding use in high rise developments, were obtained in late 1969. The Manufacturers Standardization Society of the Valve and Fittings Industry developed and approved SP-74 in September 1970. A few months later, the MSS publication was submitted to Standards Committee B16, whose Subcommittee 9 (now Subcommittee J) gave prompt approval to the proposal. After Standards Committee approval, some delay was encountered in providing necessary assurances to ANSI, but approval was finally granted to ANSI B16.32-1973, Cast Copper Alloy Solder Joint Fittings for Sovent® Drainage Systems. Approval was subsequently received for ANSI B16.43-1982, Wrought Copper and Copper Alloy Solder Joint Fittings for Sovent® Drainage Systems.

In 1982, Subcommittee B was requested to develop a standard for cast iron material. Following approval by the B16 Main Committee and the ASME Supervisory Board, approval was granted by ANSI for ASME/ANSI B16.45, Cast Iron Fittings for Sovent® Drainage Systems, on May 13, 1987.

In the 1998 edition of ASME B16.45, reference standards are updated, a quality system program annex is added, and several editorial revisions are made. Following approval by ASME B16 Subcommittee B and B16 Main Committee, ANSI approved this American National Standard on November 20, 1998.

All requests for interpretations or suggestions for revisions should be sent to the Administrative Secretary, B16 Committee, American Society of Mechanical Engineers, Three Park Avenue, New York, NY 10016-5990.

Copyright ASME International
Provided by IHS under license with ASME
No reproduction or networking permitted without license from IHS
Not for Resale

ASME B16 COMMITTEE
Standardization of Valves, Flanges, Fittings, Gaskets, and Valve Actuators

(The following is the roster of the Committee at the time of approval of this Standard.)

OFFICERS

W. N. McLean, *Chair*
H. R. Sonderegger, *Vice Chair*
P. A. Reddington, *Secretary*

COMMITTEE PERSONNEL

W. L. Ballis, Consultant, London, Ohio
R. W. Barnes, Anric Enterprises, Etobicoke, Ontario, Canada
R. R. Brodin, Fisher Controls International, Inc., Marshalltown, Iowa
M. A. Clark, Nibco, Inc., Elkhart, Indiana
A. Cohen, A. Cohen and Associates, Albuquerque, New Mexico
C. E. Floren, Mueller Co., Decatur, Illinois
D. R. Frikken, Solutia, Inc., St. Louis, Missouri
R. Henrich, Minnegasco, Inc., Golden Valley, Minnesota
J. C. Inch, Mueller Refrigeration Products Co., Hartsville, Tennessee
G. A. Jolly, Vogt Valve Co., Louisville, Kentucky
W. G. Knecht, BW/IP International, Inc., Williamsport, Pennsylvania
R. Koester, The William Powell Co., Cincinnati, Ohio
W. N. McLean, Newco Valves, Palos Park, Illinois
M. L. Nayyar, Bechtel Power Corp., Gaithersburg, Maryland
P. A. Reddington, American Society of Mechanical Engineers, New York, New York
R. A. Schmidt, Trinity-Ladish Co., Russellville, Arkansas
H. R. Sonderegger, Grinnell Corp., Cranston, Rhode Island
W. M. Stephan, Flexitallic, Inc., Mount Laurel, New Jersey
T. F. Stroud, Ductile Iron Pipe Research Association, Birmingham, Alabama
M. D. Wasicek, ABS Americas, Houston, Texas
R. E. White, Richard E. White and Associates, South Bend, Indiana
D. A. Williams, Southern Company Services, Birmingham, Alabama
L. A. Willis, The Dow Chemical Co., Freeport, Texas
W. R. Worley, Union Carbide Corp., South Charleston, West Virginia

SUBCOMMITTEE B — THREADED FITTINGS (EXCEPT STEEL)

H. R. Sonderegger, *Chair,* Grinnell Corp., Cranston, Rhode Island
B. P. Feder, *Secretary,* American Society of Mechanical Engineers, New York, New York
K. Barron, Ward Manufacturing, Blossburg, Pennsylvania
M. A. Clark, Nibco, Inc., Elkhart, Indiana
A. Cohen, A. Cohen and Associates, Albuquerque, New Mexico
A. A. Knapp, Canadian Copper/Brass Development Association, Ontario, Canada
R. L. Larkin, American Darling Valve, Birmingham, Alabama
P. I. McGrath, Consultant, Birmingham, Alabama
W. N. McLean, Newco Valves, Palos Park, Illinois
J. K. Schultz, Conine Manufacturing Co., Tyler, Texas

Copyright ASME International
Provided by IHS under license with ASME
No reproduction or networking permitted without license from IHS
Not for Resale

CORRESPONDENCE WITH B16 COMMITTEE

General. ASME Standards are developed and maintained with the intent to represent the consensus of concerned interests. As such, users of this Standard may interact with the Committee by requesting interpretations, proposing revisions, and attending Committee meetings. Correspondence should be addressed to:

Secretary, B16 Main Committee
The American Society of Mechanical Engineers
Three Park Avenue
New York, NY 10016-5990

Proposing Revisions. Revisions are made periodically to the Standard to incorporate changes that appear necessary or desirable, as demonstrated by the experience gained from the application of the Standard. Approved revisions will be published periodically.

The Committee welcomes proposals for revisions to this Standard. Such proposals should be as specific as possible, citing the paragraph number(s), the proposed wording, and a detailed description of the reasons for the proposal, including any pertinent documentation.

Interpretations. Upon request, the B16 Committee will render an interpretation of any requirement of the Standard. Interpretations can only be rendered in response to a written request sent to the Secretary of the B16 Main Committee.

The request for interpretation should be clear and unambiguous. It is further recommended that the inquirer submit his/her request in the following format:

Subject:	Cite the applicable paragraph number(s) and the topic of the inquiry.
Edition:	Cite the applicable edition of the Standard for which the interpretation is being requested.
Question:	Phrase the question as a request for an interpretation of a specific requirement suitable for general understanding and use, not as a request for an approval of a proprietary design or situation. The inquirer may also include any plans or drawings, which are necessary to explain the question; however, they should not contain proprietary names or information.

Requests that are not in this format will be rewritten in this format by the Committee prior to being answered, which may inadvertently change the intent of the original request.

ASME procedures provide for reconsideration of any interpretation when or if additional information that might affect an interpretation is available. Further, persons aggrieved by an interpretation may appeal to the cognizant ASME Committee or Subcommittee. ASME does not "approve," "certify," "rate," or "endorse" any item, construction, proprietary device, or activity.

Attending Committee Meetings. The B16 Main Committee regularly holds meetings, which are open to the public. Persons wishing to attend any meeting should contact the Secretary of the B16 Main Committee.

Copyright ASME International
Provided by IHS under license with ASME
No reproduction or networking permitted without license from IHS
Not for Resale

CONTENTS

Foreword iii
Standards Committee Roster v
Committee Correspondence vii

1 Scope 1
1.1 General 1
1.2 Quality Systems 1
1.3 References 1

2 Description 1

3 Sizes 1

4 Marking 1

5 Material 1

6 Pitch 1

7 Design Features 2

8 Dimensions and Tolerances 2
8.1 Dimensions 2
8.2 Metal Thickness 2
8.3 Outside and Inside Diameter of Fitting 2
8.4 Center-to-End Dimensions 2

9 Alignment 2

10 Tests 2

Figures
1 Aerator Fitting 3
2 Deaerator Fitting 5
3 Designation of Openings: Aerator Fitting 6
4 Designation of Openings: Deaerator Fitting 6

Copyright ASME International
Provided by IHS under license with ASME
No reproduction or networking permitted without license from IHS
Not for Resale

Tables

1 Dimensions of Sovent® Aerator Fittings 4
2 Dimensions of Sovent® Deaerator Fittings 5
3 Inspection Tolerances for Diameters 7
4 Inspection Tolerances for Center-to-End Dimensions 7

Mandatory Annex

I References 9

Nonmandatory Annex

A Quality System Program 11

Copyright ASME International
Provided by IHS under license with ASME
No reproduction or networking permitted without license from IHS
Not for Resale

CAST IRON FITTINGS FOR SOVENT® DRAINAGE SYSTEMS

1 SCOPE

1.1 General

This Standard for cast iron drainage fittings used on self-aerating, one-pipe Sovent®[1] drainage systems, covers the following:

(a) description

(b) sizes and methods for designating openings for reducing fittings

(c) marking

(d) material

(e) pitch

(f) design

(g) dimensions and tolerances

(h) tests

1.2 Quality Systems

Requirements relating to the product manufacturers' Quality System Programs are described in Annex A.

1.3 References

Standards and specifications adopted by reference in this Standard are shown in Annex I, which is part of this Standard.

2 DESCRIPTION

(a) These fittings are designed for use in buildings utilizing the single-stack Sovent® system.

(b) Fittings are designed to achieve satisfactory performance within standards based on normal fixture load as per American Plumbing Industry Fixture Unit Values for Drainage.[2]

(c) Manufacturers are cautioned that configurations shown in Figs. 1 and 2 are critical. The dimensions specified herein shall govern all cases.

(d) Connections shall conform to sizes and dimensions listed in Table 1 or 2. Joint connections are designed for use with hubless soil pipe couplings conforming to the requirements of the Cast Iron Soil Pipe Institute Specification 310-85.

3 SIZES[3]

(a) Sizes and dimensions of fittings shall conform to dimensions in Table 1 or 2.

(b) Opening size sequence is illustrated in Figs. 3 and 4.

4 MARKING

(a) Each fitting shall be marked with the manufacturer's name or trademark, and with "Sovent®."

(b) Fittings of gray cast iron do not require material marking. If the manufacturer elects to use malleable iron or ductile iron, the fitting shall be marked with "MI" or "DI."

5 MATERIAL

(a) The material used to manufacture the fittings shall be in accordance with ASTM A 126, Grade A.

(b) At the option of the manufacturer, fittings may be furnished of malleable iron complying with the requirements of ASTM A 197 or A 47, Grade 32510, or of ductile iron complying with ASTM A 395 or A 536, Grade 65-45-12.

6 PITCH

All nominal 90 deg drain openings shall be pitched down toward the fitting in a slope of $\frac{1}{4}$ in./ft (2.1%) of horizontal pipe with reference to a horizontal plane.

---

[1] ®Registered U. S. Patent and Trade Mark Office by O. H. C. Messner.

[2] Reference: National Standard Plumbing Code — 1996

[3] The use of the word "nominal" as a modifier of a dimension or size is intended to indicate that the stated dimension or size is used for purposes of designation only. The actual dimension may be the nominal dimension subject to the variation of established tolerances.

Copyright ASME International
Provided by IHS under license with ASME
No reproduction or networking permitted without license from IHS
Not for Resale

7 DESIGN FEATURES

(a) The liquid or air flow area on each side of baffle Q (see Fig. 1) in the aerator fitting shall not be less than the cross-sectional area of the nominal pipe size (NPS) of the main line.

(b) Aerator fittings with double soil entries shall have baffle P (see Fig. 1).

(c) The cross-sectional area (see Fig. 2) opposite the baffle (flow area) on the deaerator fittings shall be from 1.2 to 1.4 times the nominal pipe size (NPS).

8 DIMENSIONS AND TOLERANCES

8.1 Dimensions

Dimensions in U.S. customary units given in Tables 1 through 4 are the standard. For conversion to metric units, 1 in. = 25.4 mm.

8.2 Metal Thickness

At no point in the castings shall the metal thickness be less than 90% of the values listed in Table 1.

8.3 Outside and Inside Diameter of Fitting

The diameters shall be within the tolerances shown in Table 3.

8.4 Center-to-End Dimensions

The center-to-end dimensions shall be within the tolerances shown in Table 4.

9 ALIGNMENT

The maximum allowable variation in the alignment of all openings shall be 0.06 in./ft (0.5%), except for openings that are pitched.

10 TESTS

(a) Each fitting shall be subjected to a minimum hydrostatic pressure of 25 psi. The fitting shall not leak water or sweat at any part of the surface. Alternate tests that demonstrate the same degree of soundness and strength are acceptable.

(b) Manufacturers shall inspect fittings prior to shipment for the presence of cracks, holes, or other defects.

(c) Manufacturers shall be prepared to certify that their products meet the requirements of this Standard.

Copyright ASME International
Provided by IHS under license with ASME
No reproduction or networking permitted without license from IHS

Not for Resale

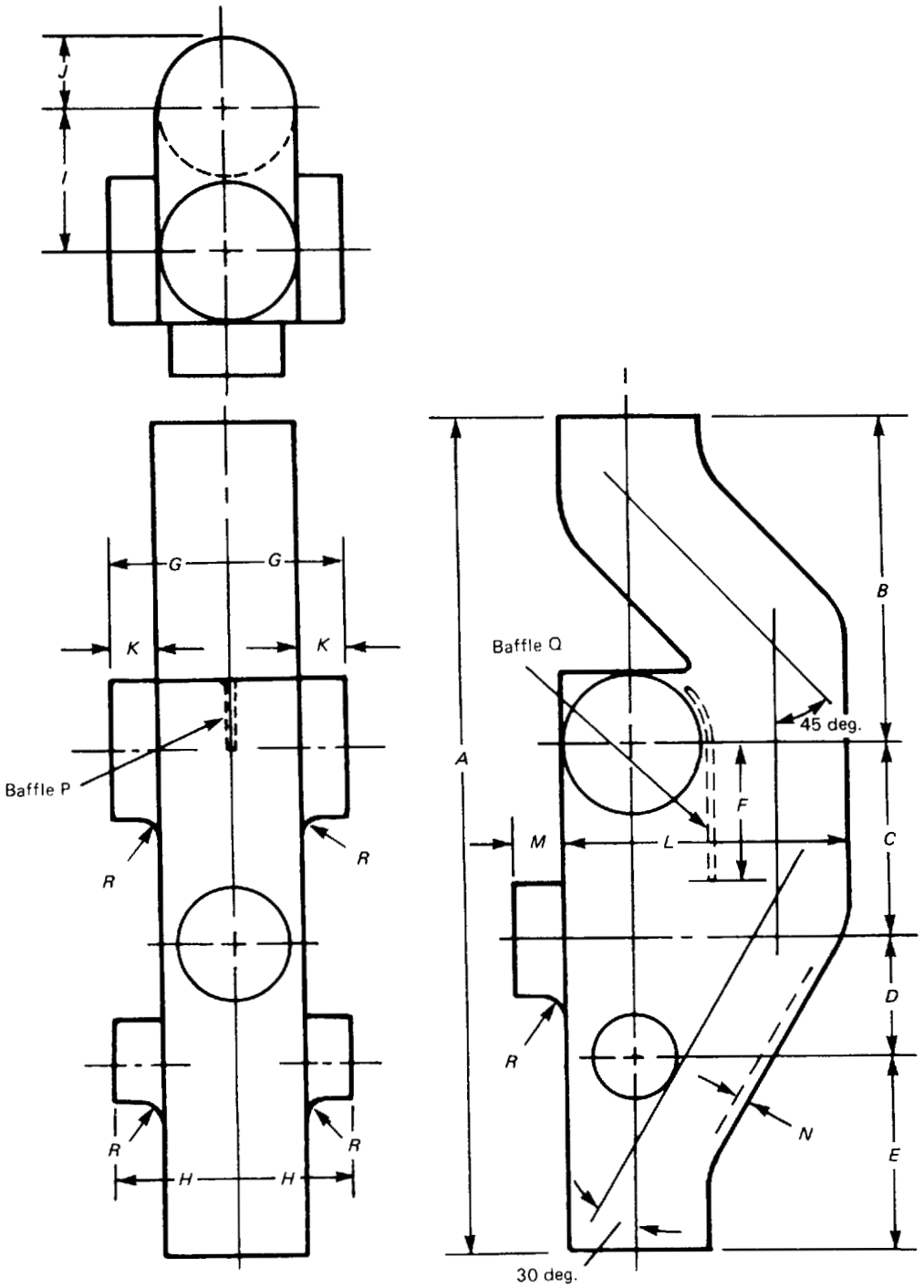

GENERAL NOTE: See Fig. 3 for designation of openings.

FIG. 1 AERATOR FITTING

Copyright ASME International
Provided by IHS under license with ASME
No reproduction or networking permitted without license from IHS

Not for Resale

TABLE 1 DIMENSIONS OF SOVENT® AERATOR FITTINGS

NPS	Opening Size [Note (1)]													A	B	C	D	E	F	G	H	I	J	K	L	M	N
	(1)		(2)		(3)		(4)		(5)		(6)		(7)														
3	3	×	3	×	3	×	3	×	2	×	2	×	2	19.50	8.25	5.00	2.00	4.25	3.00	3.66	3.66	3.16	1.66	2.00	6.31	2.00	[Note (2)]
4	4	×	4	×	4	×	4	×	2	×	2	×	3	24.75	10.75	7.00	3.00	4.00	4.00	4.25	4.25	4.19	2.23	2.50	9.75	3.00	[Note (2)]
5	5	×	5	×	4	×	4	×	2	×	2	×	3	30.75	13.75	7.00	3.00	7.00	5.13	6.22	6.22	6.25	2.73	3.50	12.50	3.00	[Note (2)]
6	6	×	6	×	4	×	4	×	2	×	2	×	3	30.75	13.75	7.00	3.00	7.00	5.13	6.72	6.72	6.75	3.23	3.50	13.13	3.00	[Note (2)]
8	8	×	8	×	4	×	4	×	2	×	2	×	3	36.00	15.00	13.00	3.00	5.00	6.00	7.00	7.00	6.50	4.31	3.50	14.88	2.00	[Note (2)]
8	8	×	8	×	6	×	6	×	4	×	4	×	6	36.00	15.00	13.00	3.00	5.00	6.00	7.00	7.00	6.50	4.31	4.50	14.88	2.00	[Note (2)]

GENERAL NOTE: Dimensions are in inches.

NOTES:

(1) See Fig. 3 for location of designated size dimensions.

(2) Nominal metal thickness:

NPS 2 = 0.16
NPS 3 = 0.16
NPS 4 = 0.19
NPS 5 = 0.19
NPS 6 = 0.19
NPS 8 = 0.23

Copyright ASME International
Provided by IHS under license with ASME
No reproduction or networking permitted without license from IHS

Not for Resale

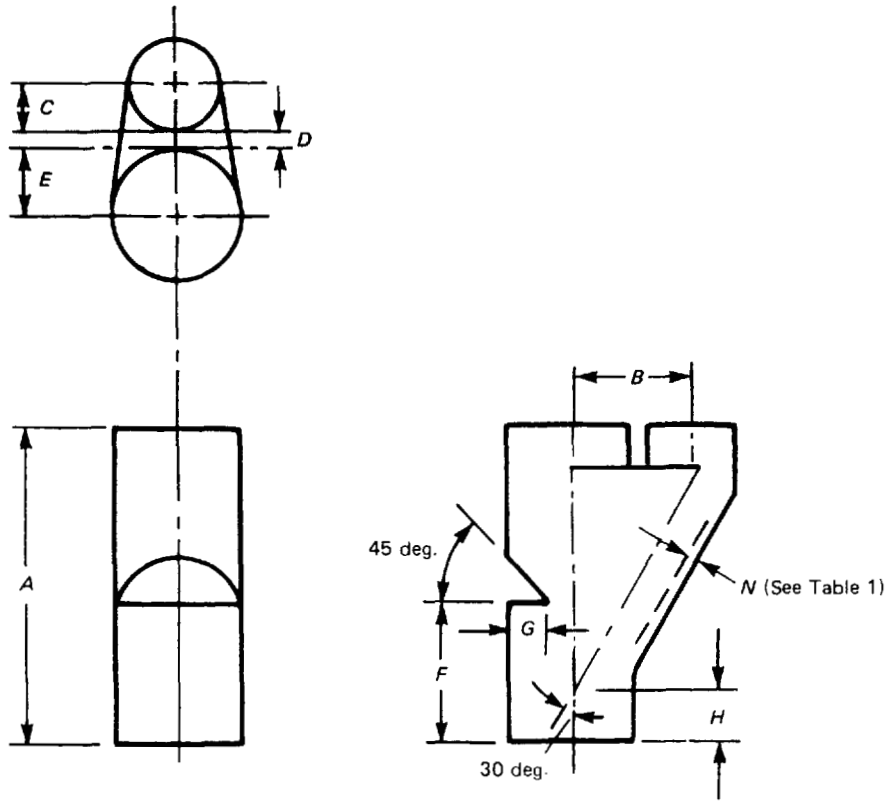

GENERAL NOTE: See Fig. 4 for designation of openings.

FIG. 2 DEAERATOR FITTING

TABLE 2 DIMENSIONS OF SOVENT® DEAERATOR FITTINGS

	Opening Size												
NPS	①		②		③	*A*	*B*	*C*	*D*	*E*	*F*	*G*	*H*
3	3	×	3	×	3	10.75	4.00	1.66	0.69	1.65	4.75	1.40	1.75
4	4	×	4	×	3	12.63	4.62	1.69	0.75	2.18	5.00	1.50	2.25
5	5	×	5	×	4	16.00	5.75	2.23	0.87	2.65	8.00	2.25	3.00
6	6	×	6	×	4	20.75	6.75	2.23	1.37	3.15	10.00	2.50	4.25
8	8	×	8	×	6	21.00	9.00	3.19	1.63	4.18	10.00	3.25	2.75

GENERAL NOTE: Dimensions are in inches.

Copyright ASME International
Provided by IHS under license with ASME
No reproduction or networking permitted without license from IHS
Not for Resale

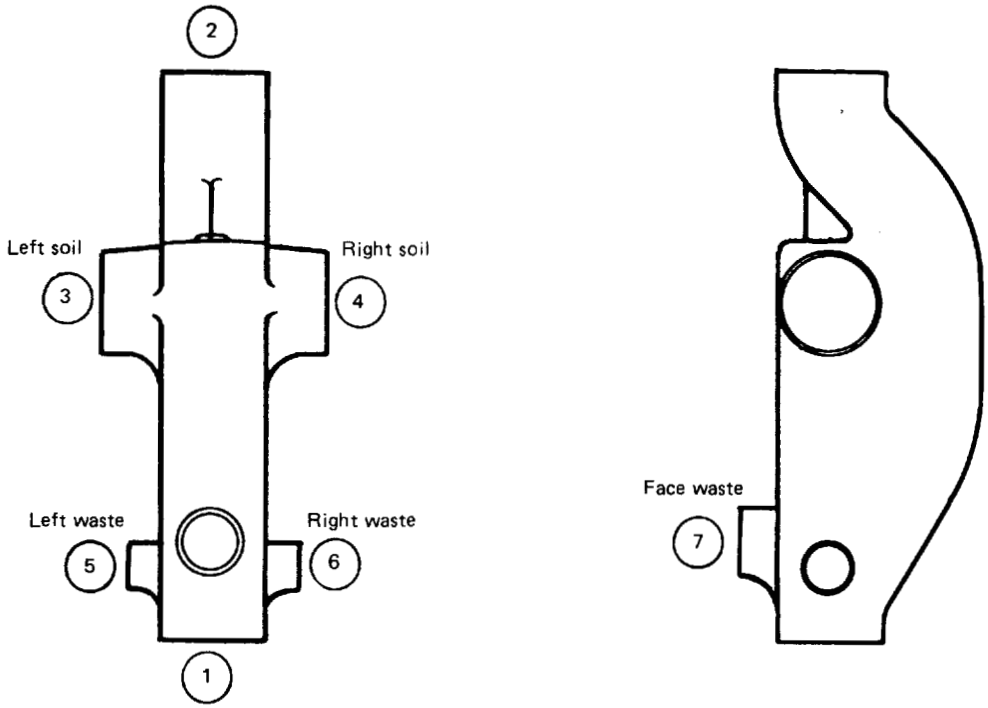

FIG. 3 DESIGNATION OF OPENINGS: AERATOR FITTING

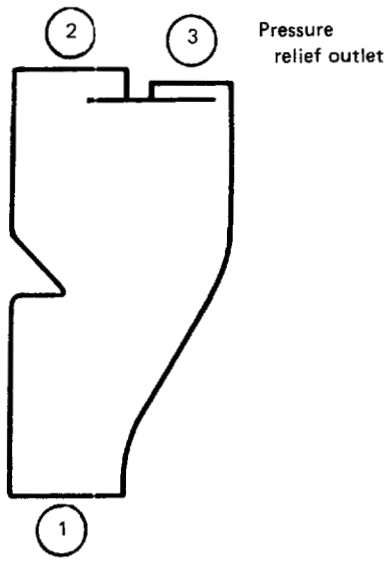

FIG. 4 DESIGNATION OF OPENINGS: DEAERATOR FITTING

Copyright ASME International
Provided by IHS under license with ASME
No reproduction or networking permitted without license from IHS
Not for Resale

TABLE 3 INSPECTION TOLERANCES FOR DIAMETERS

NPS	Inside Diameter, in.	Outside Diameter, in.
2	2.00 ± 0.06	2.35 ± 0.09
3	3.00 ± 0.06	3.35 ± 0.09
4	4.00 ± 0.06	4.38 ± 0.09
5	4.94 ± 0.09	5.30 ± 0.09
6	5.94 ± 0.09	6.30 ± 0.09
8	7.94 ± 0.13	8.38 ± 0.13

TABLE 4 INSPECTION TOLERANCES FOR CENTER-TO-END DIMENSIONS [Note (1)]

NPS	Center-to-End, Plus or Minus, in.
2	0.08
3	0.10
4	0.12
5	0.12
6	0.14
8	0.16

NOTE:
(1) The above limits apply to all fittings covered by this Standard. Inspection limits for end-to-end dimensions shall be double the limits for center-to-center dimensions. The largest opening in the fitting governs the tolerance to be applied to all openings.

Copyright ASME International
Provided by IHS under license with ASME
No reproduction or networking permitted without license from IHS

Not for Resale

ANNEX I
REFERENCES

(This Annex is an integral part of ASME B16.45-1998 and is placed after the main text for convenience.)

The following is a list of standards and specifications referenced in this Standard.

National Standard Plumbing Code — 1996

Publisher: National Standard Plumbing Code, 180 South Washington Street, Falls Church, VA 22040

ASTM A 126-95, Specification for Gray Iron Castings for Valves, Flanges, and Pipe Fittings

ASTM A 197-87 (R1992), Specification for Cupola Malleable Iron

ASTM A 395-88 (R1993), Specification for Ferritic Ductile Iron Pressure-Retaining Castings for Use at Elevated Temperatures

ASTM A 536-84 (R1993), Specification for Ductile Iron Castings

Publisher: American Society for Testing and Materials (ASTM) 100 Barr Harbor Drive, West Conshohocken, PA 19428-2959

CISPI 310-97, Hubless Cast Iron Soil Pipe Coupling

Publisher: Cast Iron Soil Pipe Institute (CISPI), 5959 Shallowford Road, Chattanooga, TN 37421

ISO 9000-1: 1994, Quality Management and Quality Assurance Standards — Part 1: Guidelines for Selection and Use

ISO 9000-2: 1997, Quality Management and Quality Assurance Standards — Part 2: Generic Guidelines for the Application of ISO 9001, ISO 9002, and ISO 9003

ISO 9000-3: 1991, Quality Management and Quality Assurance Standards — Part 3: Guidelines for the Application of ISO 9001 to the Development, Supply, and Maintenance of Software

ISO 9001: 1994, Quality Systems — Model for Quality Assurance in Design, Development, Production, Installation, and Servicing

ISO 9002: 1994, Quality Systems — Model for Quality Assurance in Production and Servicing

ISO 9003: 1994, Quality Systems — Model for Quality Assurance in Final Inspection and Test

Publisher: ISO International Organization for Standardization (ISO), 1, rue de Varembé, Case postale 56 CH-1121 Genève 20, Switzerland/Suisse

Copyright ASME International
Provided by IHS under license with ASME
No reproduction or networking permitted without license from IHS

Not for Resale

ANNEX A
QUALITY SYSTEM PROGRAM

(This is a nonmandatory part of ASME B16.45-1998 and is provided for informational purposes only.)

The products manufactured in accordance with this Standard shall be produced under a quality system program following the principles of an appropriate standard from the ISO 9000 series.[1] A determination of the need for registration and/or certification of the product manufacturer's quality system program by an independent organization shall be the responsibility of the manufacturer. The detailed documentation demonstrating program compliance shall be available to the purchaser at the manufacturer's facility. A written summary description of the program utilized by the product manufacturer shall be available to the purchaser upon request. The product manufacturer is defined as the entity whose name or trademark appears on the product in accordance with the marking or identification requirements of this Standard.

---

[1] The series is also available from the American National Standards Institute (ANSI) and the American Society for Quality (ASQ) as American National Standards that are identified by a prefix "Q" replacing the prefix "ISO." Each standard of the series is listed under Annex I.

Copyright ASME International
Provided by IHS under license with ASME
No reproduction or networking permitted without license from IHS
Not for Resale

AMERICAN NATIONAL STANDARDS FOR PIPING, PIPE FLANGES, FITTINGS, AND VALVES

Scheme for the Identification of Piping Systems A13.1-1996
Pipe Threads, General Purpose (Inch) ..... B1.20.1-1983(R1992)
Dryseal Pipe Threads (Inch) ..... B1.20.3-1976(R1991)
Cast Iron Pipe Flanges and Flanged Fittings: Classes 25, 125, and 250 ..... B16.1-1998
Malleable Iron Threaded Fittings: Classes 150 and 300 ..... B16.3-1998
Gray Iron Threaded Fittings: Classes 125 and 250 ..... B16.4-1998
Pipe Flanges and Flanged Fittings (NPS ½ Through NPS 24) B16.5-1996
Factory-Made Wrought Steel Buttwelding Fittings B16.9-1993
Face-to-Face and End-to-End Dimensions of Valves B16.10-1992
Forged Fittings, Socket-Welding and Threaded B16.11-1996
Cast Iron Threaded Drainage Fittings B16.12-1998
Ferrous Pipe Plugs, Bushings, and Locknuts with Pipe Threads B16.14-1991
Cast Bronze Threaded Fittings: Classes 125 and 250 ..... B16.15-1985(R1994)
Cast Copper Alloy Solder Joint Pressure Fittings ..... B16.18-1984(R1994)
Metallic Gaskets for Pipe Flanges: Ring-Joint, Spiral-Wound, and Jacketed B16.20-1998
Nonmetallic Flat Gaskets for Pipe Flanges B16.21-1992
Wrought Copper and Copper Alloy Solder Joint Pressure Fittings B16.22-1995
Cast Copper Alloy Solder Joint Drainage Fittings — DWV B16.23-1992
Cast Copper Alloy Pipe Flanges and Flanged Fittings: Classes 150, 300, 400, 600, 900, 1500, and 2500 ..... B16.24-1991
Buttwelding Ends B16.25-1992
Cast Copper Alloy Fittings for Flared Copper Tubes B16.26-1988
Wrought Steel Buttwelding Short Radius Elbows and Returns B16.28-1994
Wrought Copper and Wrought Copper Alloy Solder Joint Drainage Fittings — DWV B16.29-1994
Cast Copper Alloy Solder Joint Fittings for Sovent Drainage Systems B16.32-1992
Manually Operated Metallic Gas Valves for Use in Gas Piping Systems up to 125 psig (Sizes ½ Through 2) B16.33-1990
Valves — Flanged, Threaded, and Welding End B16.34-1996
Orifice Flanges B16.36-1996
Large Metallic Valves for Gas Distribution (Manually Operated, NPS 2½ to 12, 125 psig Maximum) ..... B16.38-1985(R1994)
Malleable Iron Threaded Pipe Unions B16.39-1998
Manually Operated Thermoplastic Gas Shutoffs and Valves in Gas Distribution Systems ..... B16.40-1985(R1994)
Functional Qualification Requirements for Power Operated Active Valve Assemblies for Nuclear Power Plants ..... B16.41-1983(R1989)
Ductile Iron Pipe Flanges and Flanged Fittings, Classes 150 and 300 ..... B16.42-1998
Manually Operated Metallic Gas Valves for Use in House Piping Systems B16.44-1995
Cast Iron Fittings for Sovent® Drainage Systems B16.45-1998
Large Diameter Steel Flanges (NPS 26 Through NPS 60) B16.47-1996
Steel Line Blanks B16.48-1997
Power Piping B31.1-1995
Fuel Gas Piping (not an ANSI standard) B31.2-1968
Process Piping B31.3-1996
Pipeline Transportation Systems for Liquid Hydrocarbons and Other Liquids B31.4-1992
Refrigeration Piping B31.5-1992
Gas Transmission and Distribution Piping Systems B31.8-1995
Building Services Piping B31.9-1988
Slurry Transportation Piping Systems B31.11-1989
Manual for Determining the Remaining Strength of Corroded Pipelines B31G-1991
Welded and Seamless Wrought Steel Pipe B36.10M-1995
Stainless Steel Pipe ..... B36.19M-1985(R1994)
Self-Operated and Power-Operated Safety-Related Valves Functional Specification Standard ..... N278.1-1975(R1992)

The ASME Publications Catalog shows a complete list of all the Standards published by the Society. For a complimentary catalog, or the latest information about our publications, call 1-800-THE-ASME (1-800-843-2763).

Copyright ASME International
Provided by IHS under license with ASME
No reproduction or networking permitted without license from IHS
Not for Resale

ASME Services

ASME is committed to developing and delivering technical information. At ASME's Information Central, we make every effort to answer your questions and expedite your orders. Our representatives are ready to assist you in the following areas:

ASME Press
Codes & Standards
Credit Card Orders
IMechE Publications
Meetings & Conferences
Member Dues Status
Member Services & Benefits
Other ASME Programs
Payment Inquiries
Professional Development
Short Courses
Publications
Public Information
Self-Study Courses
Shipping Information
Subscriptions/Journals/Magazines
Symposia Volumes
Technical Papers

How can you reach us? It's easier than ever!

There are four options for making inquiries* or placing orders. Simply mail, phone, fax, or E-mail us and an Information Central representative will handle your request.

Mail
ASME
22 Law Drive, Box 2900
Fairfield, New Jersey
07007-2900

Call Toll Free
US & Canada: 800-THE-ASME
(800-843-2763)
Mexico: 95-800-THE-ASME
(95-800-843-2763)
Universal: 973-882-1167

Fax-24 hours
973-882-1717
973-882-5155

E-Mail-24 hours
Infocentral
@asme.org

* Information Central staff are not permitted to answer inquiries about the technical content of this code or standard. Information as to whether or not technical inquiries are issued to this code or standard is shown on the copyright page. All technical inquiries must be submitted in writing to the staff secretary. Additional procedures for inquiries may be listed within.

Copyright ASME International
Provided by IHS under license with ASME
No reproduction or networking permitted without license from IHS
Not for Resale