STD.ASME B16.42-ENGL 1998 0759670 0608994 794

ASME B16.42-1998
(Revision of ASME/ANSI B16.42-1987)

DUCTILE IRON PIPE FLANGES AND FLANGED FITTINGS

Classes 150 and 300

AN AMERICAN NATIONAL STANDARD

The American Society of Mechanical Engineers

Copyright ASME International
Provided by IHS under license with ASME
No reproduction or networking permitted without license from IHS
Not for Resale

STD.ASME B16.42-ENGL 1998 0759670 0608995 620

The American Society of Mechanical Engineers

AN AMERICAN NATIONAL STANDARD

DUCTILE IRON PIPE FLANGES AND FLANGED FITTINGS

Classes 150 and 300

ASME B16.42-1998
(Revision of ASME/ANSI B16.42-1987)

Copyright ASME International
Provided by IHS under license with ASME
No reproduction or networking permitted without license from IHS
Not for Resale

Date of Issuance: April 26, 1999

The 1998 edition of this Standard is being issued with an automatic addenda subscription service. The use of addenda allows revisions made in response to public review comments or committee actions to be published on a regular yearly basis; revisions published in addenda will become effective six months after the Date of Issuance of the addenda. The next edition of this Standard is scheduled for publication in 2003.

ASME issues written replies to inquiries concerning interpretations of technical aspects of this Standard. The interpretations will be included with the above addenda service.

ASME is the registered trademark of The American Society of Mechanical Engineers.

This code or standard was developed under procedures accredited as meeting the criteria for American National Standards. The Standards Committee that approved the code or standard was balanced to assure that individuals from competent and concerned interests have had an opportunity to participate. The proposed code or standard was made available for public review and comment, which provides an opportunity for additional public input from industry, academia, regulatory agencies, and the public-at-large.

ASME does not "approve," "rate," or "endorse" any item, construction, proprietary device, or activity.

ASME does not take any position with respect to the validity of any patent rights asserted in connection with any items mentioned in this document, and does not undertake to insure anyone utilizing a standard against liability for infringement of any applicable Letters Patent, nor assumes any such liability. Users of a code or standard are expressly advised that determination of the validity of any such patent rights, and the risk of infringement of such rights, is entirely their own responsibility.

Participation by federal agency representative(s) or person(s) affiliated with industry is not to be interpreted as government or industry endorsement of this code or standard.

ASME accepts responsibility for only those interpretations issued in accordance with governing ASME procedures and policies which precludes the issuance of interpretations by individual volunteers.

No part of this document may be reproduced in any form,
in an electronic retrieval system or otherwise,
without the prior written permission of the publisher.

The American Society of Mechanical Engineers
Three Park Avenue, New York, NY 10016-5990

Copyright © 1999 by
THE AMERICAN SOCIETY OF MECHANICAL ENGINEERS
All Rights Reserved
Printed in U.S.A.

Copyright ASME International
Provided by IHS under license with ASME
No reproduction or networking permitted without license from IHS

Not for Resale

FOREWORD

(This Foreword is not part of ASME B16.42-1998.)

In 1921, the American Engineering Standards Committee, later the American Standards Association (ASA), now the American National Standards Institute (ANSI), authorized the organization of a Sectional Committee on the Standardization of Pipe Flanges and Flanged Fittings, with the following organizations as joint sponsors: Heating, Piping, and Air Conditioning Contractors National Association (later the Mechanical Contractors Association of America, MCAA), Manufacturers Standardization Society of the Valves and Fittings Industry (MSS), and The American Society of Mechanical Engineers (ASME). Cast iron flanges and flanged fittings are within the scope of Subcommittee No. 1 (now Subcommittee A), with standards approved by ASA as early as 1928.

In 1957, piping components of ductile iron (also called nodular iron and, in Europe, spheroidal graphite iron) first appeared in the market. Controversy immediately developed over proper pressure-temperature ratings, and this was further aggravated by the use of casting patterns for both gray iron and carbon steel for producing the components.

Conflicting philosophies, which emerged from that controversy, thwarted efforts by MSS to develop standard practices in the early 1960s; the conflicts persisted during a study of ratings, starting in 1966 by American National Standards Committee B16 (as the Sectional Committee was called after reorganization of ASA as ANSI). The conflict continued to delay acceptance and approval of this Standard, which ultimately originated with a draft developed by MSS (taking advantage of earlier efforts) and submitted to Subcommittee A in 1977. Combining that draft with the rating basis developed in the B16 Committee, the first edition of this Standard was found acceptable and was approved by the Standards Committee, cosecretariat organizations, and ANSI, and was published with the designation ANSI B16.42-1979.

In 1982, American National Standards Committee B16 was reorganized as an ASME Committee operating under procedures accredited by ANSI. The 1981 edition of the Standard updated the referenced standards and specifications and established U.S. customary units as the standard. Following approval by the Standards Committee and ASME, ANSI granted its approval as an American National Standard on July 13, 1987, with the new designation ASME/ANSI B16.42-1987.

In the 1998 edition of ASME B16.42, Reference Standards are updated, a Quality System Program Annex is added, and several editorial revisions are made. Following approval by ASME B16 Subcommittee B and B16 Main Committee, ANSI approved this American National Standard on November 20, 1998.

Requests for interpretation or suggestions for revision should be sent to the Secretary, B16 Committee, The American Society of Mechanical Engineers, Three Park Avenue, New York, NY 10016-5990.

Copyright ASME International
Provided by IHS under license with ASME
No reproduction or networking permitted without license from IHS
Not for Resale

ASME B16 COMMITTEE
Standardization of Valves, Flanges, Fittings, Gaskets, and Valve Actuators

(The following is the roster of the Committee at the time of approval of this Standard.)

OFFICERS

W. N. McLean, *Chair*
H. R. Sonderegger, *Vice Chair*
P. A. Reddington, *Secretary*

COMMITTEE PERSONNEL

W. L. Ballis, Consultant, London, Ohio
R. W. Barnes, Anric Enterprises, Etobicoke, Ontario, Canada
R. R. Brodin, Fisher Controls International, Inc., Marshalltown, Iowa
M. A. Clark, Nibco, Inc., Elkhart, Indiana
A. Cohen, A. Cohen and Associates, Albuquerque, New Mexico
C. E. Floren, Mueller Co., Decatur, Illinois
D. R. Frikken, Solutia, Inc., St. Louis, Missouri
R. Henrich, Minnegasco, Inc., Golden Valley, Minnesota
J. C. Inch, Mueller Refrigeration Products Co., Hartsville, Tennessee
G. A. Jolly, Vogt Valve Co., Louisville, Kentucky
W. G. Knecht, BW/IP International, Inc., Williamsport, Pennsylvania
R. Koester, The William Powell Co., Cincinnati, Ohio
W. N. McLean, Newco Valves, Palos Park, Illinois
M. L. Nayyar, Bechtel Power Corp., Gaithersburg, Maryland
P. A. Reddington, The American Society of Mechanical Engineers, New York, New York
R. A. Schmidt, Trinity-Ladish Co., Russellville, Arkansas
H. R. Sonderegger, Grinnell Corp., Cranston, Rhode Island
W. M. Stephan, Flexitallic, Inc., Mount Laurel, New Jersey
T. F. Stroud, Ductile Iron Pipe Research Association, Birmingham, Alabama
M. D. Wasicek, ABS Americas, Houston, Texas
R. E. White, Richard E. White and Associates, South Bend, Indiana
D. A. Williams, Southern Company Services, Birmingham, Alabama
L. A. Willis, The Dow Chemical Co., Freeport, Texas
W. R. Worley, Union Carbide Corp., South Charleston, West Virginia

PERSONNEL OF SUBCOMMITTEE B — THREADED FITTINGS (Except Steel)

H. R. Sonderegger, *C & S Chair,* Grinnell Corp., Cranston, Rhode Island
B. P. Feder, *Secretary,* The American Society of Mechanical Engineers, New York, New York
K. Barron, Ward Manufacturing, Blossburg, Pennsylvania
M. A. Clark, Nibco, Inc., Elkhart, Indiana
A. Cohen, A. Cohen and Associates, Albuquerque, New Mexico
A. A. Knapp, Canadian Copper/Brass, Ontario, Canada
R. L. Larkin, American Darling Valve, Birmingham, Alabama
P. I. McGrath, Consultant, Birmingham, Alabama
W. N. McLean, Newco Valves, Palos Park, Illinois
J. K. Schultz, Conine Manufacturing Co.,Tyler, Texas

Copyright ASME International
Provided by IHS under license with ASME
No reproduction or networking permitted without license from IHS
Not for Resale

CORRESPONDENCE WITH B16 COMMITTEE

General. ASME Standards are developed and maintained with the intent to represent the consensus of concerned interests. As such, users of this Standard may interact with the Committee by requesting interpretations, proposing revisions, and attending Committee meetings. Correspondence should be addressed to:

Secretary, B16 Main Committee
The American Society of Mechanical Engineers
Three Park Avenue
New York, NY 10016-5990

Proposing Revisions. Revisions are made periodically to the Standard to incorporate changes that appear necessary or desirable, as demonstrated by the experience gained from the application of the Standard. Approved revisions will be published periodically.

The Committee welcomes proposals for revisions to this Standard. Such proposals should be as specific as possible, citing the paragraph number(s), the proposed wording, and a detailed description of the reasons for the proposal, including any pertinent documentation.

Interpretations. Upon request, the B16 Committee will render an interpretation of any requirement of the Standard. Interpretations can only be rendered in response to a written request sent to the Secretary of the B16 Main Committee.

The request for interpretation should be clear and unambiguous. It is further recommended that the inquirer submit his/her request in the following format:

Subject:	Cite the applicable paragraph number(s) and the topic of the inquiry.
Edition:	Cite the applicable edition of the Standard for which the interpretation is being requested.
Question:	Phrase the question as a request for an interpretation of a specific requirement suitable for general understanding and use, not as a request for an approval of a proprietary design or situation. The inquirer may also include any plans or drawings, which are necessary to explain the question; however, they should not contain proprietary names or information.

Requests that are not in this format will be rewritten in this format by the Committee prior to being answered, which may inadvertently change the intent of the original request.

ASME procedures provide for reconsideration of any interpretation when or if additional information that might affect an interpretation is available. Further, persons aggrieved by an interpretation may appeal to the cognizant ASME Committee or Subcommittee. ASME does not "approve," "certify," "rate," or "endorse" any item, construction, proprietary device, or activity.

Attending Committee Meetings. The B16 Main Committee regularly holds meetings, which are open to the public. Persons wishing to attend any meeting should contact the Secretary of the B16 Main Committee.

Copyright ASME International
Provided by IHS under license with ASME
No reproduction or networking permitted without license from IHS
Not for Resale

CONTENTS

Foreword iii
Standards Committee Roster v
Correspondence With the B16 Committee vii

1 Scope 1
1.1 General 1
1.2 Quality Systems 1
1.3 References 1

2 Pressure-Temperature Ratings 1
2.1 General 1
2.2 Ratings of Flanged Joints 1
2.3 Rating Temperature 1
2.4 Temperature Considerations 2
2.5 Variances From Ratings 2

3 Size 2
3.1 Nominal Size 2
3.2 Reducing Fitting Sizes 2
3.3 Reducing Flange Sizes 2

4 Marking 2

5 Materials 3
5.1 Castings 3
5.2 Bolting 3
5.3 Gaskets 3

6 Dimensions 3
6.1 Center-to-Contact Surface and Center-to-End 3
6.2 Facings 3
6.3 Flange Bolt Holes 4
6.4 Spot Facing 4
6.5 Reducing Flanges 4
6.6 Threads for Threaded Flanges 4
6.7 Stud Bolts, Bolts, and Nuts 4
6.8 Gaskets 5
6.9 Drains 5

7 Tolerances 5
7.1 Wall Thickness 5
7.2 Center-to-Contact Surface and Contact Surface-to-Contact Surface 5

Copyright ASME International
Provided by IHS under license with ASME
No reproduction or networking permitted without license from IHS
Not for Resale

7.3 Facings 5
7.4 Flange Thickness 5
7.5 Bore of Flanges 5
7.6 Drilling and Facing 5

8 Testing 5
8.1 General 5
8.2 Flange Testing 5
8.3 Fitting Shell Tests 5

Figures

1 Method of Designating Outlets of Reducing Fittings 7
2 Method of Designating Location of Tapped Holes for Drains When Specified 8

Tables

1 Pressure–Temperature Ratings, U.S. Customary Units 2
2 Reducing Threaded Flanges for Class 150 and 300 9
3 Templates for Drilling Class 150 Ductile Iron Flanges 10
4 Dimensions of Class 150 Ductile Iron Flanges 11
5 Dimensions of Class 150 Elbows, Double Branch Elbows, Tees, Crosses, Laterals, True Ys (Straight Sizes), and Reducers 13
6 Dimensions of Class 150 Base Elbows and Base Tees 14
7 Templates for Drilling Class 300 Ductile Iron Flanges 15
8 Dimensions of Class 300 Ductile Iron Flanges 17
9 Dimensions of Class 300 Elbows, Tees, Crosses, Laterals, True Ys (Straight Sizes), and Reducers 19
10 Dimensions of Class 300 Base Elbows and Base Tees 20

Annexes

A Methods for Establishing Pressure–Temperature Ratings 21
B References 23
C Quality System Program 25

Copyright ASME International
Provided by IHS under license with ASME
No reproduction or networking permitted without license from IHS
Not for Resale

DUCTILE IRON PIPE FLANGES AND FLANGED FITTINGS
Classes 150 and 300

1 SCOPE

1.1 General

This Standard covers minimum requirements for Class 150 and 300 cast ductile iron pipe flanges and flanged fittings. The requirements covered are as follows:

(a) pressure-temperature ratings
(b) sizes and method of designating openings
(c) marking
(d) materials
(e) dimensions and tolerances
(f) bolts, nuts, and gaskets
(g) tests

1.2 Quality Systems

Requirements relating to the product manufacturers' Quality System Programs are described in Annex B.

1.3 References

1.3.1 Referenced Standards. Standards and specifications adopted by reference in this Standard are shown in Annex C, which is part of this Standard. It is not considered practical to identify the specific edition of each standard and specification in the individual references. Instead, the specific edition reference is identified in Annex C.

1.3.2 Codes and Regulations. A flange or flanged fitting used under the jurisdiction of the ASME Boiler and Pressure Vessel Code, the ASME Code for Pressure Piping, or a governmental regulation is subject to any limitation of that code or regulation. This includes any maximum temperature limitation, any rule governing the use of a material at low temperature, or provisions for operation at a pressure exceeding the pressure-temperature ratings in this Standard.

2 PRESSURE–TEMPERATURE RATINGS

2.1 General

Cast ductile iron pipe flanges and flanged fittings covered by this Standard shall be designated as one of the following: Class 150 or 300.

Except as provided in para. 2.5, ratings are maximum allowable nonshock working pressures, expressed as gage pressure, at the service temperature from –20°F to 650°F. Ratings in Table 1 are in U.S. customary units. For intermediate temperatures, linear interpolation is permitted. Methods for establishing pressure-temperature ratings are given in Annex A.

2.2 Ratings of Flanged Joints

Ratings in this Standard apply to flanged joints that conform to the limitations on bolting in para. 5.2 and on gaskets in para. 6.8, and which are made up in accordance with good practice for alignment and assembly. See also para. 2.4.

Use of the ratings for flanged joints not conforming to these limitations is the sole responsibility of the user. Requirements for alignment and assembly of joints are not given in this Standard.

If the two flanges in a flanged joint do not have the same pressure-temperature ratings, the rating of the joint at any temperature is the lower of the two flange ratings at that temperature.

2.3 Rating Temperature

The temperature shown for a corresponding pressure rating is the temperature of the pressure-containing shell of the flange or flanged fitting. In general, this temperature is the same as that of the contained fluid. Use of a pressure rating corresponding to a temperature other than that of the contained fluid is the responsibility of the user, subject to the requirements of the applicable code or regulation.

Copyright ASME International
Provided by IHS under license with ASME
No reproduction or networking permitted without license from IHS
Not for Resale

TABLE 1 PRESSURE-TEMPERATURE RATINGS, U.S. CUSTOMARY UNITS

	Working Pressure, psi gage	
Temperature, °F	Class 150	Class 300
-20 to 100	250	640
200	235	600
300	215	565
400	200	525
500	170	495
600	140	465
650	125	450

2.4 Temperature Considerations

Application of the ratings in this Standard to flanged joints at both high and low temperatures shall take into consideration the risk of leakage due to forces and moments developed in the connected piping or equipment. The following provisions are intended to minimize these risks.

2.4.1 Flange Attachment. Threaded flanges are not recommended for service above 500°F if severe thermal gradients or thermal cycling is involved.

2.4.2 High Temperature Service. When used above 400°F, Class 150 flanged joints may develop leakage unless care is taken to avoid imposing severe external loads and/or severe thermal gradients.

2.5 Variances From Ratings

Except as provided herein, ratings are the maximum allowable nonshock working pressure for the corresponding temperature.

2.5.1 Safety or Relief Valve Operation. Under conditions of safety valve, relief valve, or rupture disk operation, the pressure on a flange or flanged fitting may exceed the rated pressure at the pressure relieving temperature by no more than 10%. Such conditions are necessarily of short duration. Overpressure greater than the aforementioned under pressure-relieving conditions is the responsibility of the user, subject to the requirements of the applicable code or regulation.

2.5.2 Other Variances. Operating variations (transients) that subject a flange or flanged fitting to pressure in excess of the rated pressure at the corresponding temperature are the responsibility of the user, subject to the requirements of the applicable code or regulation.

2.5.3 System Hydrostatic Test. Flanged joints and flanged fittings may be subjected to system hydrostatic tests at a pressure not to exceed the hydrostatic shell test pressure specified in para. 8.3. Testing at any higher pressure is the responsibility of the user.

3 SIZE

3.1 Nominal Size

The size of a flange or flanged fitting covered by this Standard is its nominal pipe size (NPS). The diameter of a bolt is its nominal size. Use of nominal indicates that the stated size or dimension is only for designation, not measurement. The actual dimension may or may not be the nominal size and is subject to established tolerances.

3.2 Reducing Fitting Sizes

Reducing fittings shall be designated by the size of the openings in their proper sequence as indicated in the sketches, Fig. 1.

3.3 Reducing Flange Sizes

Reducing flanges shall be designated by the two nominal pipe sizes. See examples in Note (4), Table 2.

4 MARKING

Except as modified herein, flanges and flanged fittings shall be marked as required in MSS SP-25.

(a) Name. The manufacturer's name or trademark shall be applied.

(b) Material. The word "DUCTILE" ("D.I." where space does not permit "DUCTILE").

(c) Rating Class. Numerals shall be applied giving the pressure rating class for which the product is designed.

(d) Designation. The designation "B16" shall be applied, preferably located adjacent to the Class designation, to indicate conformance to this Standard.

(e) Temperature. No temperature markings are required on flanges and flanged fittings, but if marked, the temperature shall be shown with its corresponding tabulated pressure rating.

Copyright ASME International
Provided by IHS under license with ASME
No reproduction or networking permitted without license from IHS
Not for Resale

(f) Size. The nominal pipe size shall be given, but may be omitted from reducing flanges and reducing flanged fittings.

5 MATERIALS

5.1 Castings

Ductile iron castings covered by this Standard shall conform to ASTM A 395. The castings shall not be repaired by plugging, welding, brazing, or impregnation.

5.2 Bolting

Bolting listed in paras. 5.2.1 and 5.2.2 shall be used in flanged joints covered by this Standard. Bolting of other material may be used if permitted by the applicable code or governmental regulation.

5.2.1 High Strength Bolting. Bolting materials having allowable stresses not less than those for ASTM A 193 Grade B7 may be used with any flanged joint at all listed temperatures. The strength of the nut shall be not less than specified for ASTM A 194 Grade 2H.

5.2.2 Low Strength Bolting. Bolting materials with yield strength equivalent to ASTM A 307 Grade B are considered low strength and may be used for flanged joints at temperatures no greater than 400°F and only with gaskets described in para. 6.8.

5.2.3 Bolting to Cast Iron Flanges. When Class 150 ductile iron flanges are bolted to Class 125 cast iron flanges, or Class 300 ductile iron flanges are bolted to Class 250 cast iron flanges, it is recommended that low strength boltings be used within the limitations in para. 5.2.2. If high strength bolting is used, it is recommended that the mating flanges be flat faced and that full-faced gaskets (ASME B16.5, Fig. E1, Group Ia materials) extending to the O.D. of the flange be used.

5.3 Gaskets

Materials listed in Fig. E1 (ASME B16.5, Annex E) shall be used. The user is responsible for selection of gasket materials that will withstand the expected bolt load without injurious crushing and which are suitable for the service conditions.

For low strength bolting described in para. 5.2.2, only gaskets listed in Group Ia (ASME B16.5, Fig. E1) shall be used.

6 DIMENSIONS[1]

6.1 Center-to-Contact Surface and Center-to-End

6.1.1 Standard Fittings. Center-to-contact surface dimensions are shown in Tables 5 and 9.

6.1.2 Reducing Fittings. Center-to-contact surface or center-to-flange edge dimensions for all openings shall be the same as those of straight size fittings of the largest opening. The contact surface-to-contact surface dimensions for all combinations of reducers and eccentric reducers shall be as listed for the larger opening.

6.1.3 Side Outlet Fittings. Side outlet elbows, side outlet tees, and side outlet crosses shall have all openings on intersecting center lines, and the center-to-contact surface dimensions of the side outlet shall be the same as for the largest opening. Long radius elbows with side outlet shall have the side outlet on the radial center line of the elbow, and center-to-contact surface dimension of the side outlet shall be the same as for the regular 90 deg elbow of the largest opening.

6.1.4 Fittings With Bases. Dimensions of bases for base elbows and base tees are shown in Tables 6 and 10.

6.1.5 Special Degree Elbows. Special degree elbows ranging from 1 deg to 45 deg, inclusive, shall have the same center-to-contact surface dimensions as 45 deg elbows; those over 45 deg to 90 deg, inclusive, shall have the same center-to-contact surface dimensions as 90 deg elbows. The angle designation of an elbow is its deflection from straight line flow and is also the angle between the flange faces.

6.2 Facings

6.2.1 General. Class 150 fittings and companion flanges are regularly furnished flat or with a 0.06 in. raised face. Class 300 fittings and companion flanges are furnished with a 0.06 in. raised face. The raised face is included in the minimum flange thickness Q.

6.2.2 Facings of Blind Flanges. Blind flanges need not be faced in the center if, when this center part is raised, its diameter is at least 1 in. smaller than the inside diameter of the corresponding pressure class fittings, as given in the tables. When the center part

[1] Linear dimensions expressed in decimal fractions of an inch are actually common fractions rounded to the nearest two-place decimal.

Copyright ASME International
Provided by IHS under license with ASME
No reproduction or networking permitted without license from IHS
Not for Resale

STD.ASME B16.42-ENGL 1998 ■ 0759670 0609005 178 ■

is depressed, its diameter shall not be greater than the inside diameter of the corresponding pressure class fittings, as given in the tables. Machining of the depressed center is not required.

6.2.3 Flange Facing Finish. Contact faces shall be finished in accordance with MSS SP-6.

6.3 Flange Bolt Holes

Bolt holes are in multiples of four so that fittings may face in any quadrant. Pairs of bolt holes shall straddle the center lines.

6.4 Spot Facing

Spot facing is required on ductile iron flanges and flanges on fittings if the flange thickness at any point exceeds the required minimum thickness Q as given in Tables 4, 5, 8, and 9 by more than the following amounts.

Nominal Pipe Size	Excess Thickness, in., Max.
2–18	0.12
20–24	0.19

Diameter of spot facing, when required, shall be in accordance with MSS SP-9.

6.5 Reducing Flanges

6.5.1 Drilling, O.D., Thickness, and Facing Dimensions. Flange drilling, O.D., thickness, and facing are the same as those of the standard flange of the size from which the reduction is being made.

6.5.2 Threaded Flanges. The hub dimensions shall be at least as large as those of the standard flange of the size from which the reduction is being made. The hub may be larger or may be omitted, as detailed in Table 2.

6.6 Threads for Threaded Flanges

Threaded flanges shall have American National Standard Pipe Threads, General Purpose (Inch) conforming to ASME B1.20.1. The thread shall be concentric with the axis of the flange, and variations in alignment shall not exceed 0.06 in./ft (0.5%).

6.6.1 Class 150 Flanges. Class 150 flanges are made without a counterbore. The threads shall be chamfered approximately to the major diameter of the thread at the back of the flange at an angle of approximately 45 deg with the axis of the thread of afford easy entrance in making a joint and to protect the thread. The chamfer shall be concentric with the thread and shall be included in the measurement of the thread length.

6.6.2 Class 300 Flanges. Class 300 flanges may be made with a counterbore. The threads shall be chamfered to the diameter of the counterbore at the back of the flange at an angle of approximately 45 deg with the axis of the threads to afford easy entrance in making a joint. The counterbore and chamfer shall be concentric with the thread.

6.6.3 Length of Threads. The minimum length of effective thread in reducing flanges shall be at least equal to dimension T of the corresponding pressure class threaded flange as shown in the tables, but does not necessarily extend to the face of the flange. See Table 2 for reducing threaded flanges.

6.6.4 Threading Tolerances. The gaging notch of the working gage shall come flush with the bottom of the chamfer in all threaded flanges, and shall be considered as the intersection of the chamfer cone and the pitch cone of the thread. This depth of chamfer is approximately equal to one-half the pitch of the thread. The maximum allowable thread variation is one turn large or small from the gaging notch.

6.7 Stud Bolts, Bolts, and Nuts

6.7.1 Alloy Bolting. Alloy steel stud bolts, threaded at both ends or full length, or heavy hex bolts may be used. Heavy hex nuts shall be used with all alloy steel bolting.

6.7.2 Carbon Steel Bolting

(a) Bolts smaller than $^3/_4$ in. shall have square heads or heavy hex heads. Nuts shall be heavy hex.

(b) Bolts $^3/_4$ in. and larger shall have square heads or hex heads. Nuts shall be hex or heavy hex.

6.7.3 Bolt Dimensions. Dimensions of all bolts shall conform to ASME B18.2.1.

6.7.4 Nut Dimensions. Dimensions of all nuts shall conform to ASME B18.2.2.

6.7.5 Threading of Bolts

(a) Carbon steel bolting shall be threaded in accordance with ASME B1.1, coarse thread series, Class 2A for bolts and stud bolts, and Class 2B for nuts.

(b) Alloy steel bolting shall be threaded in accordance with ASME B1.1. Nominal diameters 1 in. and smaller

Copyright ASME International
Provided by IHS under license with ASME
No reproduction or networking permitted without license from IHS
Not for Resale

shall be of the coarse thread series; nominal diameters $1\frac{1}{8}$ in. and larger shall be of the 8 thread series. Bolts, studs, and stud bolts shall have Class 2A dimensions; nuts shall have Class 2B dimensions.

6.8 Gaskets

Gaskets for Class 150 flat face flanges shall conform to the dimensions shown in ASME B16.21. For flanges with raised face, gaskets shall conform to limiting dimensions of ASME B16.5, Annex E.

6.9 Drains

6.9.1 Pipe Thread Tapping. Holes may be tapped in the wall of a fitting if the metal is thick enough to allow the effective thread length specified in MSS SP-45. Where thread length is insufficient or the tapped hole needs reinforcement, a boss shall be added.

6.9.2 Bosses. Where bosses are required, the diameters shall be as specified in MSS SP-45.

6.9.3 Designating Locations. The means of designating the locations of tapped holes or sockets for drains in fittings is shown in Fig. 2.

Each possible location is designated by a letter so that the desired locations for the various types of fittings may be specified without using further sketches or descriptions.

7 TOLERANCES

7.1 Wall Thickness

The wall thickness values for fittings listed in Tables 5 and 9 are minimum. Equipment shall be designed to produce greater nominal wall thickness so that manufacturing variances will not fall below these minimum values. See para. A1.2 in Annex A for the basis used to establish these values.

7.2 Center-to-Contact Surface and Contact Surface-to-Contact Surface

7.2.1 Center-to-Contact Surface

(a) Sizes NPS 10 and smaller, ±0.03 in.
(b) Sizes NPS 12 and larger, ±0.06 in.

7.2.2 Contact Surface-to-Contact Surface

(a) Sizes NPS 10 and smaller, ±0.06 in.
(b) Sizes NPS 12 and larger, ±0.12 in.

7.3 Facings

Outside diameter, 0.06 in. raised face, ±0.03 in.

7.4 Flange Thickness

(a) Sizes NPS 18 and smaller, +0.12 in. −0
(b) Sizes NPS 20 and larger, +0.19 in. −0

7.5 Bore of Flanges

7.5.1 Lapped Flanges

(a) Sizes NPS 10 and smaller, +0.03 in. −0
(b) Sizes NPS 12 and larger, +0.06 in. −0

7.5.2 Counterbore of Threaded Flanges

(a) Sizes NPS 10 and smaller, +0.03 in. −0
(b) Sizes NPS 12 and larger, +0.06 in. −0

7.6 Drilling and Facing

(a) Bolt circle diameter, +0.06 in.
(b) Center-to-center of adjacent bolt holes, ±0.03 in.
(c) Eccentricity between bolt circle diameter and machined facing diameters:
(1) Sizes NPS $2\frac{1}{2}$ and smaller, ±0.03 in.
(2) Sizes NPS 3 and larger, ±0.06 in.

8 TESTING

8.1 General

Flanged fittings shall be hydrostatically tested in accordance with para. 8.3.

8.2 Flange Testing

Flanges are not required to be hydrostatically tested. Flanges attached to (or integral with) piping, pressure vessels, or other equipment may be subject to system hydrostatic test (see para. 2.5.3). In such cases, attention should be given to gasket selection because of possible excessive deformation of the flange.

8.3 Fitting Shell Tests

The hydrostatic shell test for flanged fittings shall be not less than 1.5 times the 100°F rating rounded off to the next higher 25 psi increment. The test pressure shall be 400 psi for Class 150 and 975 psi for Class 300.

Copyright ASME International
Provided by IHS under license with ASME
No reproduction or networking permitted without license from IHS
Not for Resale

(a) The test shall be made with water, or with other suitable fluid provided its viscosity is no greater than that of water, at a test temperature not above 125°F.

(b) The test duration shall be a minimum of 15 sec for fittings NPS 2 and smaller, 60 sec for fittings NPS $2\frac{1}{2}$ through 8, and 3 min for fitting NPS 10 and larger.

(c) No visible leakage is permitted through the pressure boundary wall.

Copyright ASME International
Provided by IHS under license with ASME
No reproduction or networking permitted without license from IHS

Not for Resale

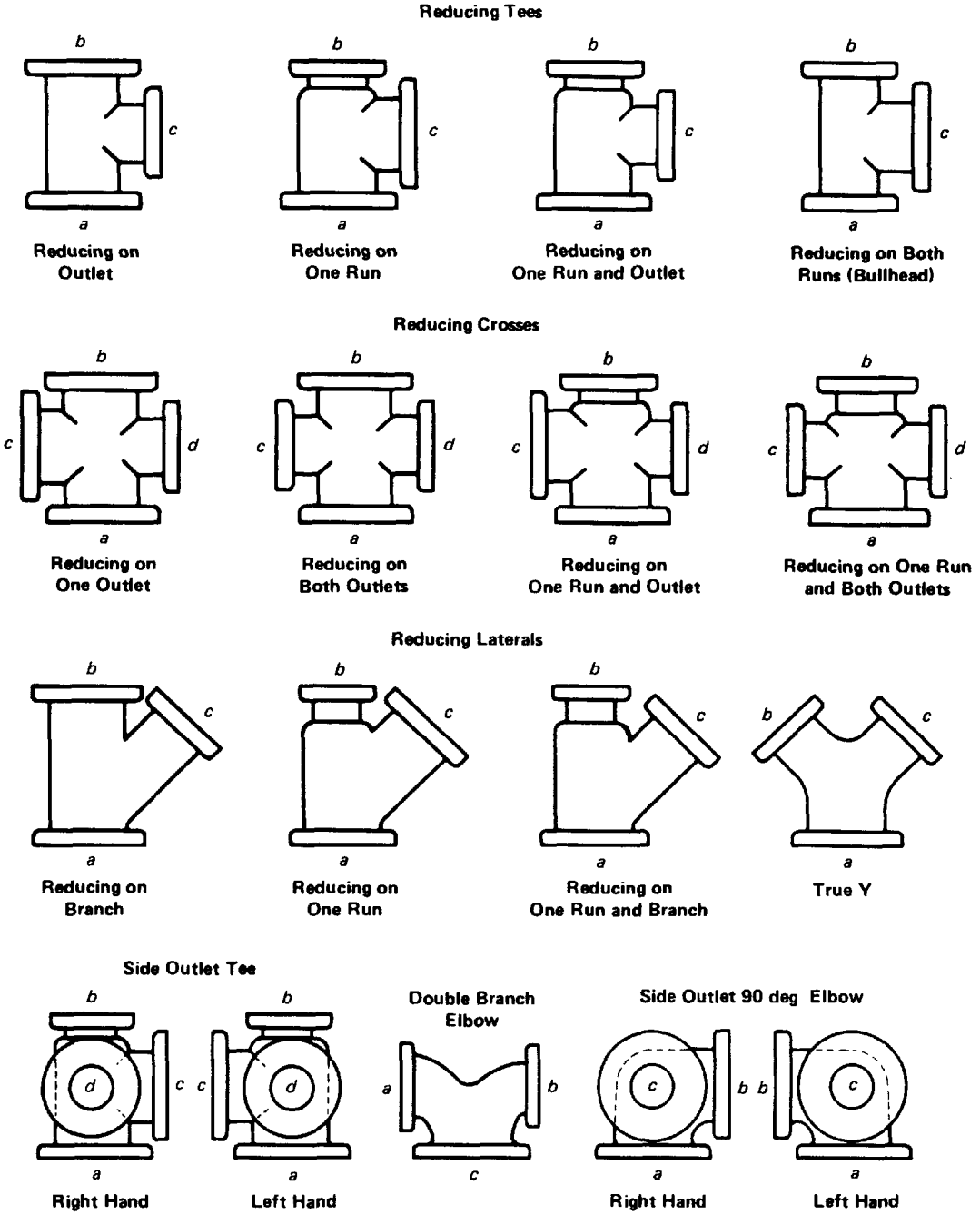

GENERAL NOTE:
In designating the outlets of reducing fittings, the openings should be read in the order indicated by the sequence of the letters *a, b, c,* and *d*. In designating the outlets of side outlet reducing fittings, the side outlet is named last, and in the case of the side outlet cross (which is not shown), the side outlet is designated by the letter *e*.

FIG. 1 METHOD OF DESIGNATING OUTLETS OF REDUCING FITTINGS

Copyright ASME International
Provided by IHS under license with ASME
No reproduction or networking permitted without license from IHS
Not for Resale

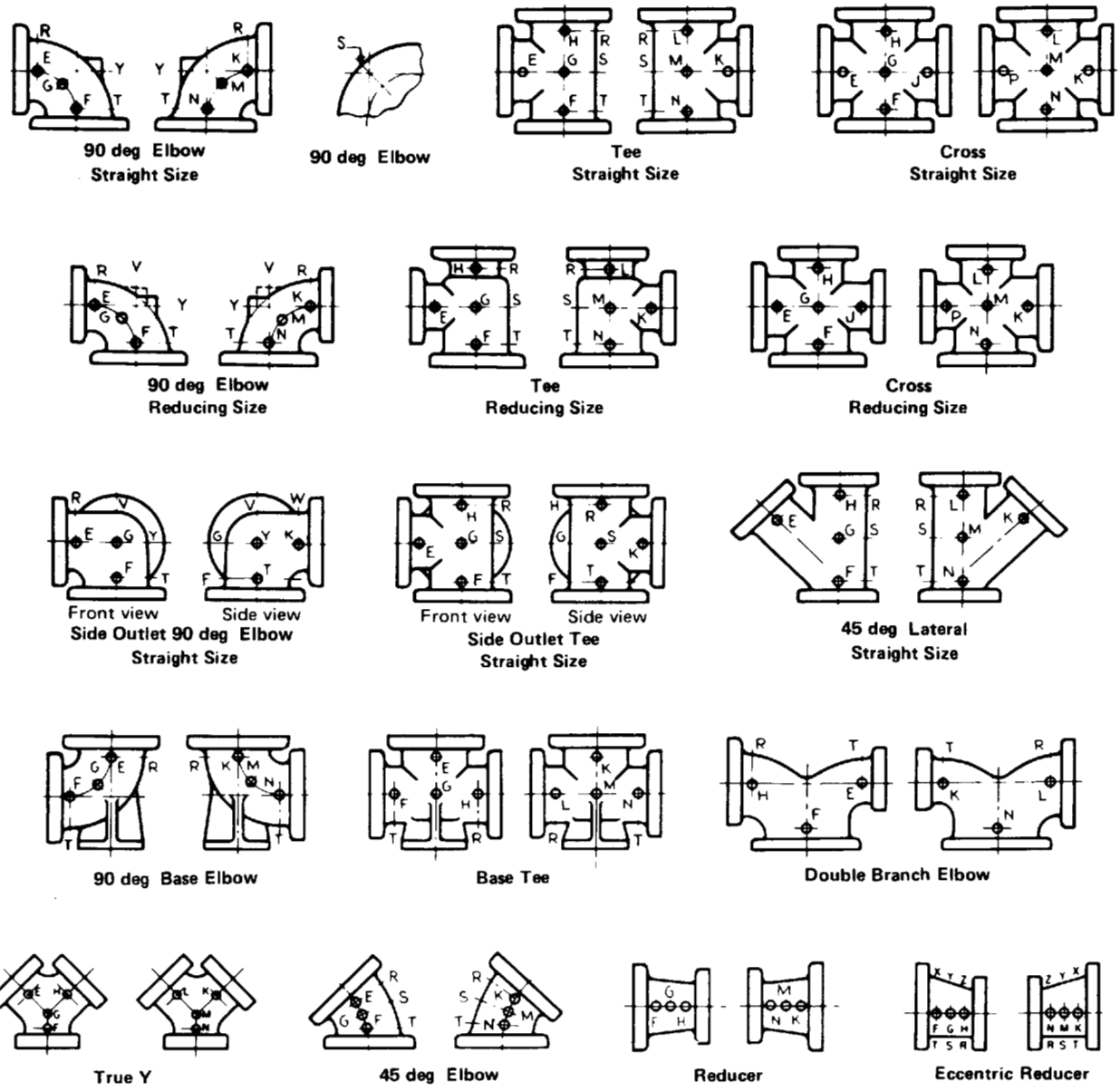

GENERAL NOTE:
The above sketches show two views of the same fitting and represent fittings with symmetrical shapes, with the exception of the side outlet elbow and the side outlet tee (straight sizes).

FIG. 2 METHOD OF DESIGNATING LOCATION OF TAPPED HOLES FOR DRAINS WHEN SPECIFIED

Copyright ASME International
Provided by IHS under license with ASME
No reproduction or networking permitted without license from IHS Not for Resale

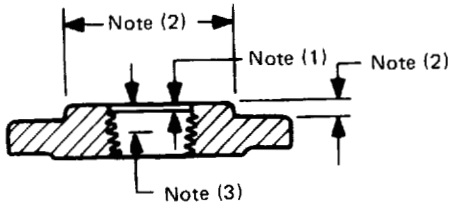

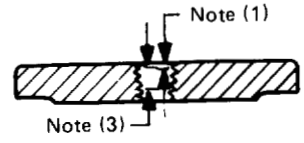

Blind Flange

TABLE 2 REDUCING THREADED FLANGES FOR CLASSES 150 AND 300

1	2	3	4	5	6
Nominal Pipe Size [Note (4)]	Smallest Size [Note (2)] of Reducing Outlet Requiring Hub Flanges	Nominal Pipe Size [Note (4)]	Smallest Size [Note (2)] of Reducing Outlet Requiring Hub Flanges	Nominal Pipe Size [Note (4)]	Smallest Size [Note (2)] of Reducing Outlet Requiring Hub Flanges
1	½	3½	1½	12	3½
1¼	½	4	1½	14	3½
1½	½	5	1½	16	4
2	1	6	2½	18	4
2½	1¼	8	3	20	4
3	1¼	10	3½	24	4

NOTES:

(1) Class 150 flanges do not have a counterbore. Class 300 flanges will have a depth of counterbore q of 0.25 in. for NPS 2 and smaller tappings and 0.38 in. for NPS 2½ and larger. The diameter of counterbore S is the same as that given in the tables of threaded flanges for the corresponding tapping.

(2) The hub dimensions shall be at least as large as those of the standard flanges of the size to which the reduction is being made, except flanges reducing to a size smaller than those of columns 2, 4, and 6 may be made from blind flanges. See example 2 below.

(3) Minimum length of effective threads shall be at least equal to dimension T of the corresponding pressure class threaded flange as shown in tables, but does not necessarily extend to the face of the flange. For thread of threaded flanges, see para. 6.6.

(4) For method of designating reducing threaded flanges, see para. 3.3 and examples 1 and 2 below.

Example 1: The size designation is NPS 6 × 2½ — Class 300 reducing threaded flange. This flange has the following dimensions:

NPS 2½ — taper pipe thread tapping (ASME B1.20.1)
12.5 in. — diameter of regular NPS 6 Class 300 threaded flange
1.44 in. — thickness of regular NPS 6 Class 300 threaded flange
7.0 in. — diameter of hub for regular NPS 5 Class 300 threaded flange
0.62 in. — height of hub for regular NPS 5 Class 300 threaded flange

Other dimensions the same as for regular NPS 6 Class 300 threaded flange, Table 8.

Example 2: The size designation is NPS 6 × 2 — Class 300 reducing threaded flange. Use regular NPS 6 Class 300 blind flange tapped with NPS 2 taper pipe thread (ASME B1.20.1).

Copyright ASME International
Provided by IHS under license with ASME
No reproduction or networking permitted without license from IHS
Not for Resale

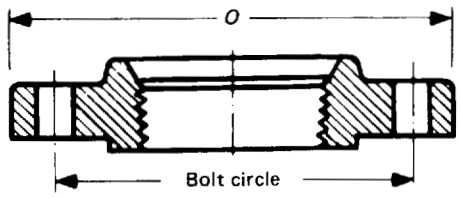

Flange

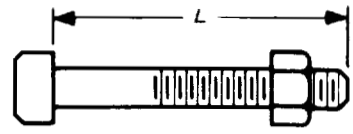

Machine Bolt With Nut

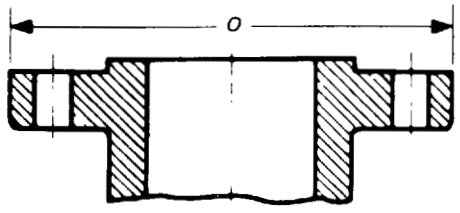

Flanged Fitting

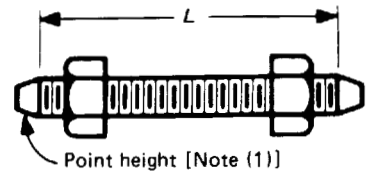

Stud Bolt With Nuts

TABLE 3 TEMPLATES FOR DRILLING CLASS 150 DUCTILE IRON FLANGES

Nominal Pipe Size	Outside Diameter of Flange, *O*	Drilling [Notes (2), (3)]				Length of Bolts, *L*	
		Diameter of Bolt Circle	Diameter of Bolt Holes	Number of Bolts	Diameter of Bolts	Stud Bolts [Note (3)]	Machine Bolts
1	4.25	3.12	0.62	4	1/2	2.75	2.25
1 1/4	4.62	3.50	0.62	4	1/2	2.75	2.50
1 1/2	5.00	3.88	0.62	4	1/2	3.00	2.50
2	6.00	4.75	0.75	4	5/8	3.25	2.75
2 1/2	7.00	5.50	0.75	4	5/8	3.50	3.00
3	7.50	6.00	0.75	4	5/8	3.75	3.25
3 1/2	8.50	7.00	0.75	8	5/8	3.75	3.25
4	9.00	7.50	0.75	8	5/8	3.75	3.25
5	10.00	8.50	0.88	8	3/4	4.00	3.25
6	11.00	9.50	0.88	8	3/4	4.00	3.50
8	13.50	11.75	0.88	8	3/4	4.25	3.75
10	16.00	14.25	1.00	12	7/8	4.75	4.00
12	19.00	17.00	1.00	12	7/8	4.75	4.25
14	21.00	18.75	1.12	12	1	5.25	4.50
16	23.50	21.25	1.12	16	1	5.50	4.75
18	25.00	22.75	1.25	16	1 1/8	6.00	5.00
20	27.50	25.00	1.25	20	1 1/8	6.25	5.50
24	32.00	29.50	1.38	20	1 1/4	7.00	6.00

GENERAL NOTES:
(a) Dimensions are in inches.
(b) For other dimensions, see Tables 4 and 5.

NOTES:
(1) Length of stud bolts does not include the height of the points.
(2) For flange holes, see para. 6.3.
(3) For spot facing, see para. 6.4.

Copyright ASME International
Provided by IHS under license with ASME
No reproduction or networking permitted without license from IHS
Not for Resale

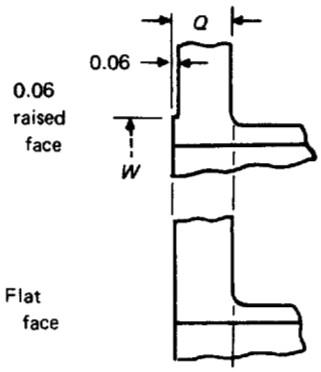

End Flange Facings and Their Relationship to Flange Thickness

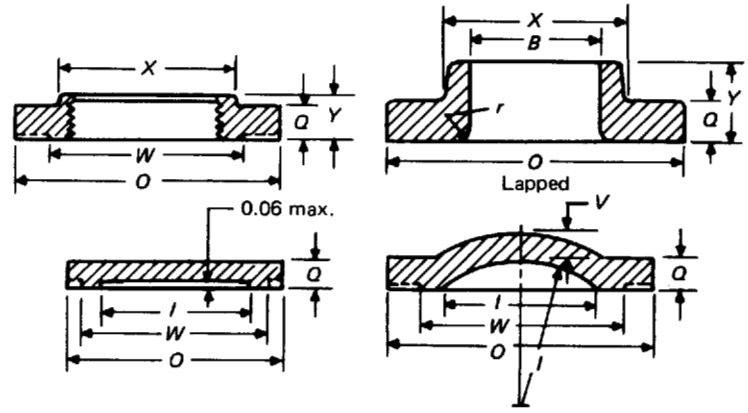

NPS 12 and Larger Optional Design

TABLE 4 DIMENSIONS OF CLASS 150 DUCTILE IRON FLANGES

Nominal Pipe Size	Diameter of Port, *I*	Diameter of Flange, *O*	Thickness of Flange Min., *Q*	Diameter of Hub [Note (1)] Min., *X*	Length of Hub and Threads [Note (2)] Min., *Y*	Wall Thickness Min., *V*	Diameter of Raised Face, *W*	Bore Lapped Min., *B*	Corner Radius of Bore of Lapped Flange, *r*	Hub Length Lapped, *Y*
1	1.00	4.25	0.56	1.94	0.69	...	2.00	1.38	0.12	0.69
1¼	1.25	4.62	0.62	2.31	0.81	...	2.50	1.72	0.19	0.81
1½	1.50	5.00	0.69	2.56	0.88	...	2.88	1.97	0.25	0.88
2	2.00	6.00	0.75	3.06	1.00	...	3.62	2.46	0.31	1.00
2½	2.50	7.00	0.88	3.56	1.12	...	4.12	2.97	0.31	1.12
3	3.00	7.50	0.94	4.25	1.19	...	5.00	3.60	0.38	1.19
3½	3.50	8.50	0.94	4.81	1.25	...	5.50	4.10	0.38	1.25
4	4.00	9.00	0.94	5.31	1.31	...	6.19	4.60	0.44	1.31
5	5.00	10.00	0.94	6.44	1.44	...	7.31	5.69	0.44	1.44
6	6.00	11.00	1.00	7.56	1.56	...	8.50	6.75	0.50	1.56
8	8.00	13.50	1.12	9.69	1.75	...	10.62	8.75	0.50	1.75
10	10.00	16.00	1.19	12.00	1.94	...	12.75	10.92	0.50	1.94
12	12.00	19.00	1.25	14.38	2.19	0.81	15.00	12.92	0.50	2.19
14	14.00	21.00	1.38	15.75	2.25	0.88	16.25	14.18	0.50	3.12
16	16.00	23.50	1.44	18.00	2.50	1.00	18.50	16.19	0.50	3.44
18	18.00	25.00	1.56	19.88	2.69	1.06	21.00	18.20	0.50	3.81
20	20.00	27.50	1.69	22.00	2.88	1.12	23.00	20.25	0.50	4.06
24	24.00	32.00	1.88	26.12	3.25	1.25	27.25	24.25	0.50	4.38

GENERAL NOTES:
(a) Dimensions are in inches.
(b) For tolerances, see Section 7.
(c) For facings, see para. 6.2.
(d) For flange bolt holes, see para. 6.3 and Table 3.
(e) For spot facing, see para. 6.4.
(f) For reducing threaded flanges, see Table 2.
(g) Blind flanges may be made with or without hub at the option of the manufacturer.

NOTES:
(1) This dimension is for large end of the hub, which may be straight or tapered. Taper shall not exceed 7 deg on threaded and lapped flanges.
(2) For thread of threaded flanges, see para. 6.6.

Copyright ASME International
Provided by IHS under license with ASME
No reproduction or networking permitted without license from IHS Not for Resale

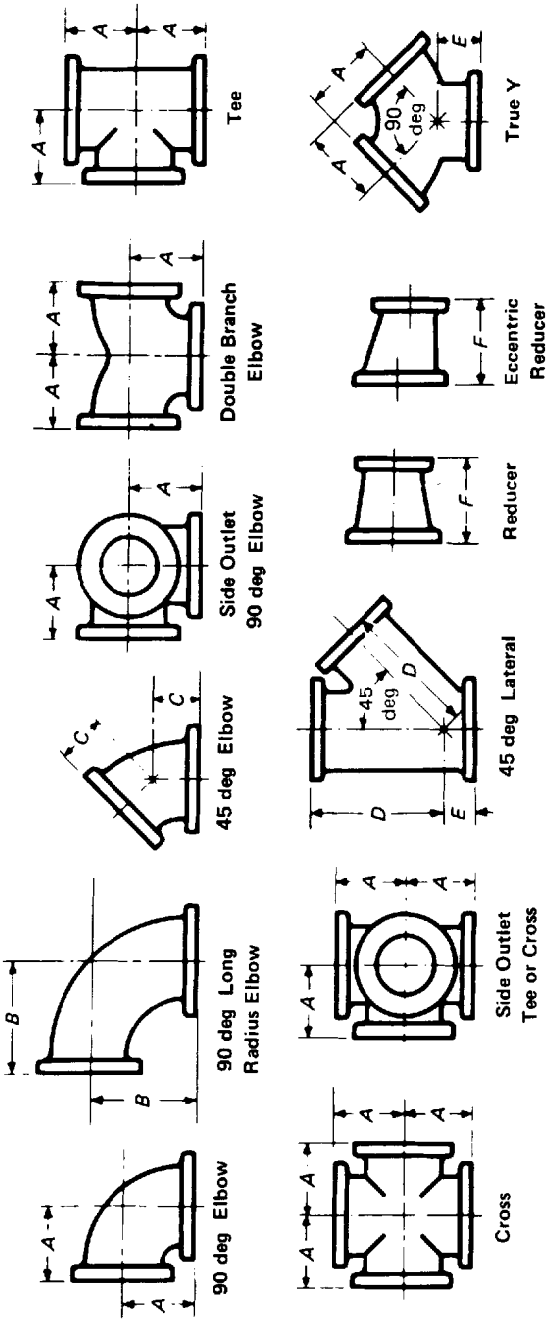

TABLE 5 ILLUSTRATION

Not for Resale

Copyright ASME International
Provided by IHS under license with ASME
No reproduction or networking permitted without license from IHS

STD.ASME B16.42-ENGL 1998 ■ 0759670 0609014 100 ■

TABLE 5 DIMENSIONS OF CLASS 150 ELBOWS, DOUBLE BRANCH ELBOWS, TEES, CROSSES, LATERALS, TRUE Ys (STRAIGHT SIZES), AND REDUCERS

Nominal Pipe Size	Inside Diameter of Fittings	Center-to-Face 90 deg Elbow Tees, Crosses, True Y, and Double Branch Elbow, *A*	Center-to-Face 90 deg Long Radius Elbow, *B*	Center-to-Face 45 deg Elbow, *C*	Center-to-Face Lateral, *D*	Short Center-to-Face True Y and Lateral, *E*	Face-to-Face Reducer, *F*	Diameter of Flange	Thickness of Flange Min., *Q*	Wall Thickness Min.
1	1.00	3.50	5.00	1.75	5.75	1.75	4.50	4.25	0.44	0.16
1¼	1.25	3.75	5.50	2.00	6.25	1.75	4.50	4.62	0.50	0.19
1½	1.50	4.00	6.00	2.25	7.00	2.00	4.50	5.00	0.56	0.19
2	2.00	4.50	6.50	2.50	8.00	2.50	5.00	6.00	0.62	0.22
2½	2.50	5.00	7.00	3.00	9.50	2.50	5.50	7.00	0.69	0.22
3	3.00	5.50	7.75	3.00	10.00	3.00	6.00	7.50	0.75	0.22
3½	3.50	6.00	8.50	3.50	11.50	3.00	6.50	8.50	0.81	0.25
4	4.00	6.50	9.00	4.00	12.00	3.00	7.00	9.00	0.94	0.25
5	5.00	7.50	10.25	4.50	13.50	3.50	8.00	10.00	0.94	0.28
6	6.00	8.00	11.50	5.00	14.50	3.50	9.00	11.00	1.00	0.28
8	8.00	9.00	14.00	5.50	17.50	4.50	11.00	13.50	1.12	0.31
10	10.00	11.00	16.50	6.50	20.50	5.00	12.00	16.00	1.19	0.34
12	12.00	12.00	19.00	7.50	24.50	5.50	14.00	19.00	1.25	0.38
14	13.25	14.00	21.50	7.50	27.00	6.00	16.00	21.00	1.38	0.41
16	15.25	15.00	24.00	8.00	30.00	6.50	18.00	23.50	1.44	0.44
18	17.25	16.50	26.50	8.50	32.00	7.00	19.00	25.00	1.56	0.47
20	19.25	18.00	29.00	9.50	35.00	8.00	20.00	27.50	1.69	0.50
24	23.25	22.00	34.00	11.00	40.50	9.00	24.00	32.00	1.88	0.57

GENERAL NOTES:
(a) Dimensions are in inches; reference Table 5 Illustration on previous page.
(b) For tolerances, see Section 7.
(c) For facings, see para. 6.2.
(d) For flange bolt holes, see para. 6.3 and Table 3.
(e) For spot facing, see para. 6.4.
(f) For center-to-contact surface and center-to-end dimensions of reducing fittings, see para. 6.1.
(g) For contact surface-to-contact surface and end-to-end dimensions of reducers and eccentric reducers, see para. 6.1.
(h) For intersecting center lines, center-to-contact surface, and center-to-end dimensions of side outlet fittings, see para. 6.1.
(i) For center-to-contact surface and center-to-end dimensions of special degree elbows, see para. 6.1.
(j) For drains, see para. 6.9.

Copyright ASME International
Provided by IHS under license with ASME
No reproduction or networking permitted without license from IHS
Not for Resale

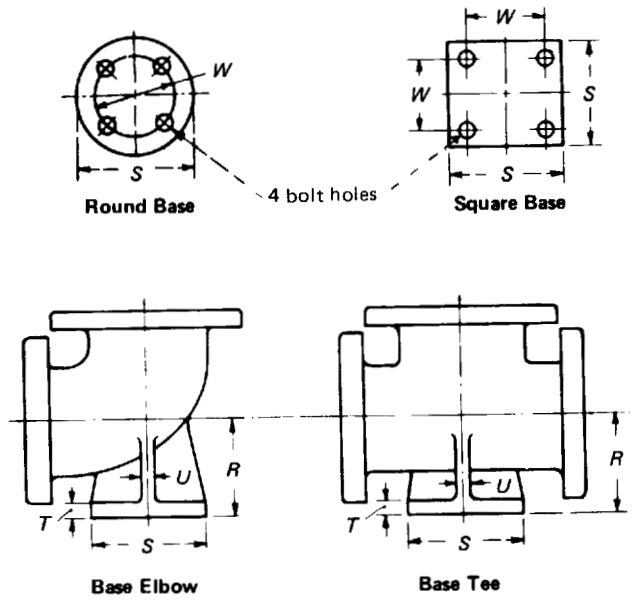

TABLE 6 DIMENSIONS OF CLASS 150 BASE ELBOWS AND BASE TEES

Nominal Pipe Size	Center-to-Base [Note (2)], *R*	Diameter of Round Base or Width of Square Base [Note (3)], *S*	Thickness of Base, *T*	Thickness of Ribs, *U*	Nominal Size of Supporting Pipe for Base	Base Drilling [Note (1)]	
						Bolt Circle or Bolt Spacing, *W*	Diameter of Drilled Holes
2	4.12	4.62	0.50	0.50	1¼	3.50	0.62
2½	4.50	4.62	0.50	0.50	1¼	3.50	0.62
3	4.88	5.00	0.56	0.50	1½	3.88	0.62
3½	5.25	5.00	0.56	0.50	1½	3.88	0.62
4	5.50	6.00	0.62	0.50	2	4.75	0.75
5	6.25	7.00	0.69	0.62	2½	5.50	0.75
6	7.00	7.00	0.69	0.62	2½	5.50	0.75
8	8.38	9.00	0.94	0.88	4	7.50	0.75
10	9.75	9.00	0.94	0.88	4	7.50	0.75
12	11.25	11.00	1.00	1.00	6	9.50	0.88
14	12.50	11.00	1.00	1.00	6	9.50	0.88
16	13.75	11.00	1.00	1.00	6	9.50	0.88
18	15.00	13.50	1.12	1.12	8	11.75	0.88
20	16.00	13.50	1.12	1.12	8	11.75	0.88
24	18.50	13.50	1.12	1.12	8	11.75	0.88

GENERAL NOTES:
(a) Dimensions are in inches.
(b) Bases are not finished unless so ordered.

NOTES:
(1) Bolt hole template shown for round base is the same as for the flange of the supporting pipe size, except using only four holes in all cases so placed as to straddle center lines. The bases of these fittings are intended for support in compression and are not to be used for anchors or supports in tension or shear.
(2) For reducing fittings, the size and center-to-face dimensions of base are determined by the size of the largest opening of fitting. In the case of reducing base elbows, orders shall specify whether the base shall be opposite the larger or smaller opening.
(3) The base dimensions apply to all straight and reducing sizes.

Copyright ASME International
Provided by IHS under license with ASME
No reproduction or networking permitted without license from IHS Not for Resale

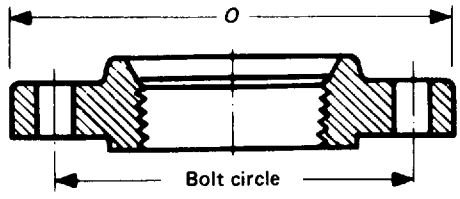

Flange

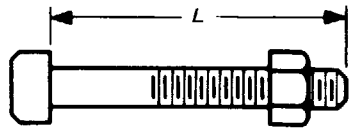

Machine Bolt With Nut

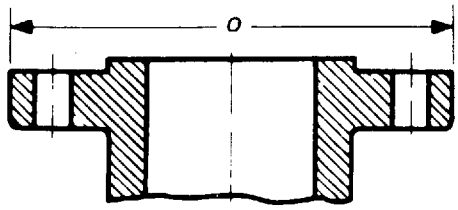

Flanged Fitting

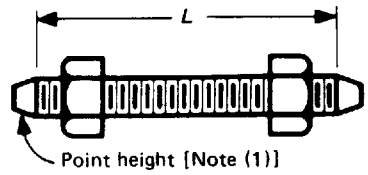

Stud Bolt With Nuts

TABLE 7 TEMPLATES FOR DRILLING CLASS 300 DUCTILE IRON FLANGES

Nominal Pipe Size	Outside Diameter of Flange, *O*	Drilling [Notes (2), (3)]				Length of Bolts, *L*	
		Diameter of Bolt Circle	Diameter of Bolt Holes	Number of Bolts	Diameter of Bolts	Stud Bolts [Note (3)]	Machine Bolts
1	4.88	3.50	0.75	4	5/8	3.00	2.50
1 1/4	5.25	3.88	0.75	4	5/8	3.25	2.75
1 1/2	6.12	4.50	0.88	4	3/4	3.50	3.00
2	6.50	5.00	0.75	8	5/8	3.50	3.00
2 1/2	7.50	5.88	0.88	8	3/4	4.00	3.25
3	8.25	6.62	0.88	8	3/4	4.25	3.50
3 1/2	9.00	7.25	0.88	8	3/4	4.25	3.75
4	10.00	7.88	0.88	8	3/4	4.50	3.75
5	11.00	9.25	0.88	8	3/4	4.75	4.25
6	12.50	10.62	0.88	12	3/4	4.75	4.25
8	15.00	13.00	1.00	12	7/8	5.50	4.75
10	17.50	15.25	1.12	16	1	6.25	5.50
12	20.50	17.75	1.25	16	1 1/8	6.75	5.75
14	23.00	20.25	1.25	20	1 1/8	7.00	6.25
16	25.50	22.50	1.38	20	1 1/4	7.50	6.50
18	28.00	24.75	1.38	24	1 1/4	7.75	6.75
20	30.50	27.00	1.38	24	1 1/4	8.00	7.25
24	36.00	32.00	1.62	24	1 1/2	9.00	8.00

GENERAL NOTES:
(a) Dimensions are in inches.
(b) For other dimensions, see Tables 8 and 9.

NOTES:
(1) Length of stud bolts does not inlcude the height of the points.
(2) For flange bolt holes, see para. 6.3.
(3) For spot facing, see para. 6.4.

Copyright ASME International
Provided by IHS under license with ASME
No reproduction or networking permitted without license from IHS Not for Resale

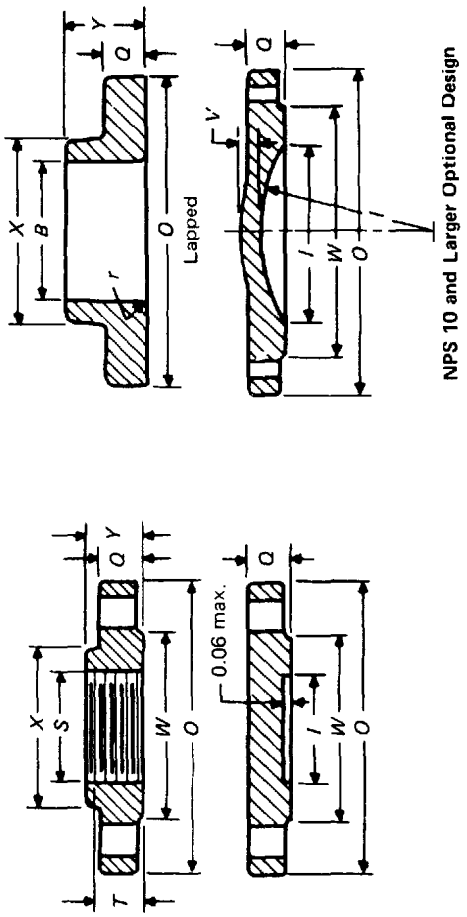

TABLE 8 ILLUSTRATION

Not for Resale

Copyright ASME International
Provided by IHS under license with ASME
No reproduction or networking permitted without license from IHS

TABLE 8 DIMENSIONS OF CLASS 300 DUCTILE IRON FLANGES

Nominal Pipe Size	Diameter of Port, *I*	Diameter of Flange, *O*	Thickness of Flange Min., *Q*	Diameter of Hub [Note (1)] Min., *X*	Length of Hub Min., *Y*	Hub Lapped, *Y*	Wall Thickness Min., *V*	Length of Threads [Note (2)] Min., *T*	Bore Lapped Min., *B*	Corner Radius of Bore of Lapped Flange, *r*	Diameter of Raised Face, *W*	Diameter of Counterbore, *S*
1	1.00	4.88	0.69	2.06	1.06	1.06	...	0.69	1.38	0.12	2.00	1.41
1¼	1.25	5.25	0.75	2.50	1.06	1.06	...	0.81	1.72	0.19	2.50	1.75
1½	1.50	6.12	0.81	2.75	1.19	1.19	...	0.88	1.97	0.25	2.88	1.99
2	2.00	6.50	0.88	3.31	1.31	1.31	...	1.12	2.46	0.31	3.62	2.50
2½	2.50	7.50	1.00	3.94	1.50	1.50	...	1.25	2.97	0.31	4.12	3.00
3	3.00	8.25	1.12	4.62	1.69	1.69	...	1.25	3.60	0.38	5.00	3.63
3½	3.50	9.00	1.19	5.25	1.75	1.75	...	1.44	4.10	0.38	5.50	4.13
4	4.00	10.00	1.25	5.75	1.88	1.88	...	1.44	4.60	0.44	6.19	4.63
5	5.00	11.00	1.38	7.00	2.00	2.00	...	1.69	5.69	0.44	7.31	5.69
6	6.00	12.50	1.44	8.12	2.06	2.06	...	1.81	6.75	0.50	8.50	6.75
8	8.00	15.00	1.62	10.25	2.44	2.44	...	2.00	8.75	0.50	10.62	8.75
10	10.00	17.50	1.88	12.62	2.62	3.75	0.94	2.19	10.92	0.50	12.75	10.88
12	12.00	20.50	2.00	14.75	2.88	4.00	1.00	2.38	12.92	0.50	15.00	12.94
14	13.25	23.00	2.12	16.75	3.00	4.38	1.12	2.50	14.18	0.50	16.25	14.19
16	15.25	25.50	2.25	19.00	3.25	4.75	1.25	2.69	16.19	0.50	18.50	16.19
18	17.00	28.00	2.38	21.00	3.50	5.12	1.38	2.75	18.20	0.50	21.00	18.19
20	19.00	30.50	2.50	23.12	3.75	5.50	1.50	2.88	20.25	0.50	23.00	20.19
24	23.00	36.00	2.75	27.62	4.19	6.00	1.62	3.25	24.25	0.50	27.25	24.19

GENERAL NOTES:
(a) Dimensions are in inches; reference Table 8 Illustration on previous page.
(b) For tolerances, see Section 7.
(c) For facing, see para. 6.2.
(d) For flange bolt holes, see para. 6.3 and Table 7.
(e) For spot facing, see para. 6.4.
(f) For reducing threaded flanges, see Table 2.
(g) Blind flanges may be made with or without hub at the option of the manufacturer.

NOTES:
(1) This dimension is for large end of hub, which may be straight or tapered. Taper shall not exceed 7 deg on threaded and lapped flanges.
(2) For thread of threaded flanges, see para. 6.6.

Copyright ASME International
Provided by IHS under license with ASME
No reproduction or networking permitted without license from IHS
Not for Resale

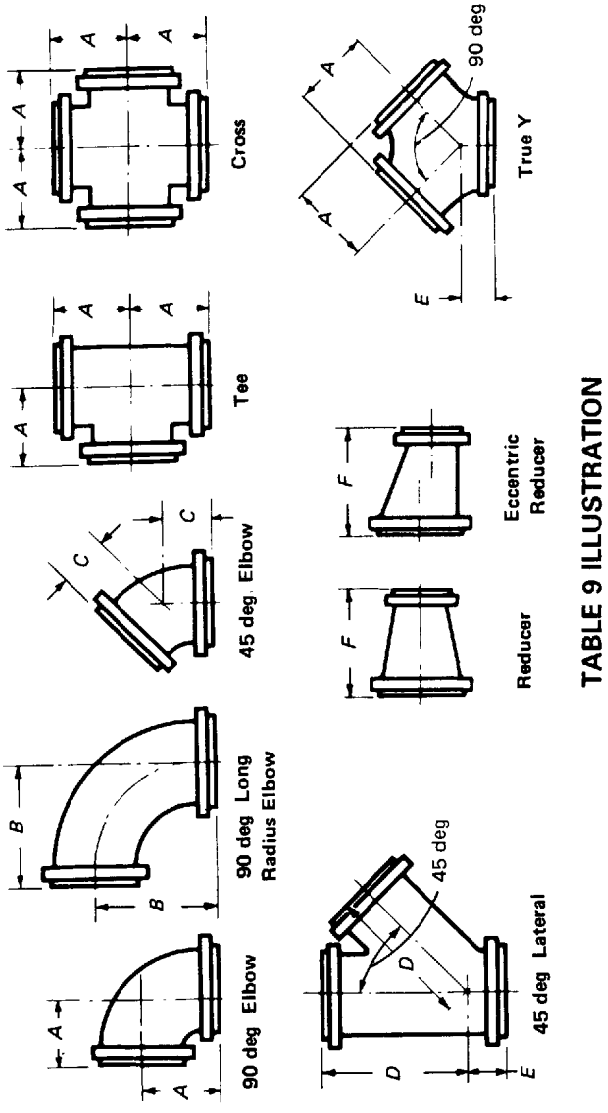

Not for Resale

Copyright ASME International
Provided by IHS under license with ASME
No reproduction or networking permitted without license from IHS

ASTD.ASME B16.42-ENGL 1998 ■ 0759670 0609020 484 ■

TABLE 9 DIMENSIONS OF CLASS 300 ELBOWS, TEES, CROSSES, LATERALS, TRUE Ys (STRAIGHT SIZES), AND REDUCERS

Nominal Pipe Size	Inside Diameter of Fittings Min.	Center-to-Face 90 deg Elbow Tees, Crosses, and True Y, *A*	Center-to-Face 90 deg Long Radius Elbow, *C*	Center-to-Face 45 deg Elbow, *C*	Center-to-Face Lateral, *D*	Short Center-to-Face True Y and Lateral, *E*	Face-to-Face Reducer, *F*	Diameter of Flange	Thickness of Flange Min., *Q*	Wall Thickness Min.
1	1.00	4.00	5.00	2.25	6.50	2.00	4.50	4.88	0.69	0.19
1¼	1.25	4.25	5.50	2.50	7.25	2.25	4.50	5.25	0.75	0.19
1½	1.50	4.50	6.00	2.75	8.50	2.50	4.50	6.12	0.81	0.19
2	2.00	5.00	6.50	3.00	9.00	2.50	5.00	6.50	0.88	0.25
2½	2.50	5.50	7.00	3.50	10.50	2.50	5.50	7.50	1.00	0.25
3	3.00	6.00	7.75	3.50	11.00	3.00	6.00	8.25	1.12	0.28
3½	3.50	6.50	8.50	4.00	12.50	3.00	6.50	9.00	1.19	0.29
4	4.00	7.00	9.00	4.50	13.50	3.00	7.00	10.00	1.25	0.31
5	5.00	8.00	10.25	5.00	15.00	3.50	8.00	11.00	1.38	0.38
6	6.00	8.50	11.50	5.50	17.50	4.00	9.00	12.50	1.44	0.38
8	8.00	10.00	14.00	6.00	20.50	5.00	11.00	15.00	1.62	0.44
10	10.00	11.50	16.50	7.00	24.00	5.50	12.00	17.50	1.88	0.50
12	12.00	13.00	19.00	8.00	27.50	6.00	14.00	20.50	2.00	0.56
14	13.25	15.00	21.50	8.50	31.00	6.50	16.00	23.00	2.12	0.62
16	15.25	16.50	24.00	9.50	34.50	7.50	18.00	25.50	2.25	0.69
18	17.00	18.00	26.50	10.00	37.50	8.00	19.00	28.00	2.38	0.75
20	19.00	19.50	29.00	10.50	40.50	8.50	20.00	30.50	2.50	0.81
24	23.00	22.50	34.00	12.00	47.50	10.00	24.00	36.00	2.75	0.94

GENERAL NOTES:
(a) Dimensions are in inches; reference Table 9 Illustration on previous page.
(b) For tolerances, see Section 7.
(c) For facings, see para. 6.2.
(d) For flange bolt holes, see para. 6.3 and Table 7.
(e) For spot facing, see para. 6.4.
(f) For center-to-contact surface and center-to-end dimensions of reducing fittings, see para. 6.1.
(g) For contact surface-to-contact surface and end-to-end dimensions of reducers and eccentric reducers, see para. 6.1.
(h) For intersecting center lines, center-to-contact surface, and center-to-end dimensions of side outlet fittings, see para. 6.1.
(i) For center-to-contact surface and center-to-end dimensions for special degree elbows, see para. 6.1.
(j) For drains, see para. 6.9.

Copyright ASME International
Provided by IHS under license with ASME
No reproduction or networking permitted without license from IHS
Not for Resale

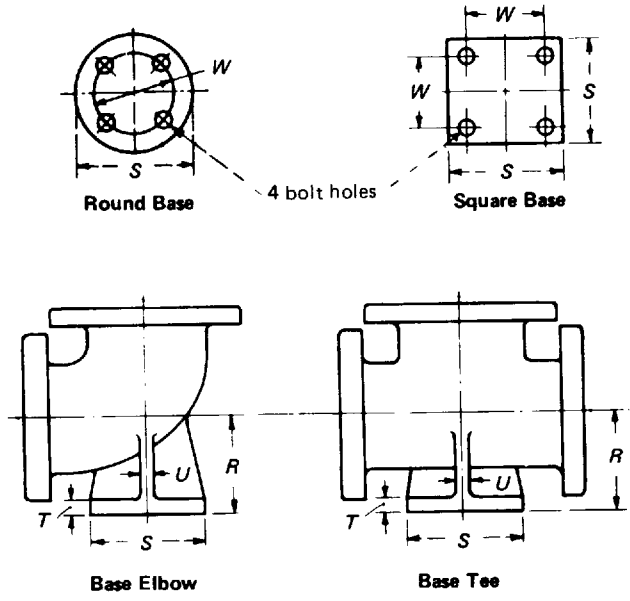

TABLE 10 DIMENSIONS OF CLASS 300 BASE ELBOWS AND BASE TEES

Nominal Pipe Size	Center-to-Base [Note (2)], *R*	Diameter of Round Base or Width of Square Base [Note (3)], *S*	Thickness of Base, *T*	Thickness of Ribs, *U*	Nominal Size of Supporting Pipe for Base	Base Drilling [Note (1)]	
						Bolt Circle or Bolt Spacing, *W*	Diameter of Drilled Holes
2	4.50	5.25	0.75	0.50	1¼	3.88	0.75
2½	4.75	5.25	0.75	0.50	1¼	3.88	0.75
3	5.25	6.12	0.81	0.62	1½	4.50	0.88
3½	5.62	6.12	0.81	0.62	1½	4.50	0.88
4	6.00	6.50	0.88	0.62	2	5.00	0.75
5	6.75	7.50	1.00	0.75	2½	5.88	0.88
6	7.50	7.50	1.00	0.75	2½	5.88	0.88
8	9.00	10.00	1.25	0.88	4	7.88	0.88
10	10.50	10.00	1.25	0.88	4	7.88	0.88
12	12.00	12.50	1.44	1.00	6	10.62	0.88
14	13.50	12.50	1.44	1.00	6	10.62	0.88
16	14.75	12.50	1.44	1.12	6	10.62	0.88
18	16.25	15.00	1.62	1.12	8	13.00	1.00
20	17.88	15.00	1.62	1.25	8	13.00	1.00
24	20.75	17.50	1.88	1.25	10	15.25	1.12

GENERAL NOTES:
(a) Dimensions are in inches.
(b) Bases are not finished unless so ordered.

NOTES:
(1) Bolt hole template shown for round base is the same as for the flange of the supporting pipe size, except using only four holes in all cases so placed as to straddle center lines. The bases of these fittings are intended for support in compression and are not to be used for anchors or supports in tension or shear.
(2) For reducing fittings, the size and center-to-face dimensions of bases are determined by the size of the largest opening of fitting. In the case of reducing base elbows, orders shall specify whether the base shall be opposite the larger or smaller opening.
(3) The base dimensions shall apply to all straight and reducing sizes.

Copyright ASME International
Provided by IHS under license with ASME
No reproduction or networking permitted without license from IHS
Not for Resale

STD·ASME B16·42-ENGL 1998 ■ 0759670 0609022 257 ■

ANNEX A
METHODS FOR ESTABLISHING PRESSURE–TEMPERATURE RATINGS

(This Annex is an integral part of ASME B16.42-1998 and is placed after the main text for convenience.)

A1 GENERAL

A1.1 Introduction

Pressure-temperature ratings in this Standard have been determined by the procedures in this Annex. The primary consideration in establishing ratings is adequate wall thickness to sustain stresses due to pressure and other loadings. See para. A1.2. Other considerations affecting or limiting the ratings include:

(a) stresses in flanges resulting from bolt-up necessary to maintain gasket seal;

(b) distortion of flanges and flanged fittings due to loadings transmitted through the pipeline;

(c) limitations applying primarily to valves but imposed also on flanges in order to maintain compatible ratings.

A1.2 Wall Thickness

Wall thickness requirements for flanged fittings are set forth in para. 7.1, and minimum thicknesses t_m are listed in the tables designated in para. 7.1. These values are all greater than those determined by Eq. (1).

$$t = 1.5\,P_c d/(2S - 1.2P_c) \quad (1)$$

where

t = calculated thickness, in.
P_c = pressure rating class designation expressed in psi (e.g., P_c = 150 psi for Class 150)
d = inside diameter of the fitting, in.
S = stress factor of 7000 psi

Equation (1) gives thickness 50% greater than for a simple cylinder designed for a stress of 7000 psi when subjected to an internal pressure equal to the pressure rating class designation in psi. Actual values in the dimension tables listed in para. 7.1 are approximately 0.1 in. to 0.2 in. heavier than those given by the equation.

A2 RATINGS IN CUSTOMARY UNITS

A2.1 Ambient Rating Equation

Ratings for −20°F to 100°F temperatures for all pressure classes are established by Eq. (2).

$$P_T = P_r S_1/8750 \quad (2)$$

where

P_T = rated working pressure, psig, for the material at temperature T
P_r = pressure rating class index expressed in psi (P_r = 300 psi for Class 300 and P_r = 115 psi for Class 150)
S_1 = selected stress, psi

The selected stress S_1 shall be the lowest of the following values:

(a) 60% of specified minimum yield strength at 100°F.

(b) 1.25 times the allowable stress at 100°F. The allowable stress shall be determined by the rules of the ASME Boiler and Pressure Vessel Code, Section I, Appendix A-150.

$$S_1 = 31{,}300 - (T^2/49.85) \quad (3)$$

Using 100 as the value for T, Eq. (3) establishes an upper limit for bolt loads approximating 125% of allowable stress for ASTM A 193 Grade B7 bolting.

A2.2 Ratings for Class 150

Pressure-temperature ratings for Class 150 flanges and flanged fittings are determined as follows.

(a) The value for p_T at temperature T (°F) for temperatures from 400°F to 650°F shall be that given by Eq. (4).

Copyright ASME International
Provided by IHS under license with ASME
No reproduction or networking permitted without license from IHS
Not for Resale

$$p_T = 320 - 0.3T \quad (4)$$

The limits of T are 400°F min. and 650°F max.

(b) The values for p_T between 100°F and 400°F shall be determined by linear interpolation of the values calculated for p_T at 100°F using Eqs. (2) and (4).

A2.3 Ratings for Class 300

Pressure-temperature ratings for Class 300 flanges and flanged fittings are determined as follows.

(a) The value for p_T at temperature T (°F) for temperatures from 400°F to 650°F shall be that given by Eq. (5).

$$p_T = 645 - 0.3T \quad (5)$$

The limits of T are 400°F min. and 650°F max.

(b) The values for p_T between 100°F and 400°F shall be determined by linear interpolation of the values calculated for p_T at 100°F and 400°F using Eqs. (2) and (5).

Copyright ASME International
Provided by IHS under license with ASME
No reproduction or networking permitted without license from IHS Not for Resale

STD.ASME B16.42-ENGL 1998 ■ 0759670 0609024 02T ■

ANNEX B
REFERENCES

(This Annex is an integral part of ASME B16.42-1998 and is placed after the main text for convenience.)

The following is a list of publications referenced in this Standard.

ASME B1.1-1989, Unified Inch Screw Threads (UN and UNR Thread Form)[1]

ASME B1.20.1-1983 (R1992), Pipe Threads, General Purpose (Inch)[1]

ASME B16.5-1996, Pipe Flanges and Flanged Fittings[1]

ASME B16.21-1992, Nonmetallic Flat Gaskets for Pipe Flanges[1]

ASME B18.2.1-1996, Square and Hex Bolts and Screws (Inch Series)[1]

ASME B18.2.2-1987, (R1993) Square and Hex Nuts (Inch Series)[1]

ASME Boiler and Pressure Vessel Code, 1995 Edition, Section I, Power Boilers[1]

Publisher: The American Society of Mechanical Engineers (ASME), Three Park Avenue, New York, NY 10016-5990

ASTM A 193/A 193M-97a, Specification for Alloy-Steel and Stainless Steel Bolting Materials for High-Temperature Service

ASTM A 194/A 194M-97, Specification for Carbon and Alloy Steel Nuts for Bolts for High-Pressure and High-Temperature Service

ASTM A 307-94, Specification for Carbon Steel Bolts and Studs, 60 000 PSI Tensile Strength

ASTM A 395-88 (R1993), Specification for Ferritic Ductile Iron Pressure-Retaining Castings for Use at Elevated Temperatures

Publisher: American Society for Testing and Materials (ASTM), 100 Barr Harbor Drive, West Conshohocken, PA 19428-2959

ISO 9000-1: 1994, Quality management and quality assurance standards — Part 1: Guidelines for selection and use

ISO 9000-2: 1997, Quality management and quality assurance standards — Part 2: Generic guidelines for the application of ISO 9001, ISO 9002, and ISO 9003

ISO 9000-3: 1991, Quality management and quality assurance standards — Part 3: Guidelines for the application of ISO 9001 to the development, supply, and maintenance of software

ISO 9001: 1994, Quality systems — Model for quality assurance in design, development, production, installation, and servicing

ISO 9002: 1994, Quality systems — Model for quality assurance in production and servicing

ISO 9003: 1994, Quality systems — Model for quality assurance in final inspection and test

Publisher: International Organization for Standardization (ISO), 1 rue de Varembè, Case postale 56 CH-1121 Genève 20, Switzerland/Suisse

MSS SP-6-1996, Standard Finishes for Contact Faces of Pipe Flanges and Connecting-End Flanges of Valves and Fittings

MSS SP-9-1997, Spot Facing for Bronze, Iron and Steel Flanges

MSS SP-25-1998, Standard Marking System for Valves, Fittings, Flanges and Unions

MSS SP-45-1992, Bypass and Drain Connections

Publisher: Manufacturers Standardization Society of the Valve and Fittings Industry (MSS), 127 Park Street, NE, Vienna, VA 22180

[1] May also be obtained from American National Standards Institute (ANSI), 11 West 42nd Street, New York, NY 10036.

Copyright ASME International
Provided by IHS under license with ASME
No reproduction or networking permitted without license from IHS Not for Resale

ANNEX C
QUALITY SYSTEM PROGRAM

(This is a nonmandatory part of ASME B16.42-1998 and is provided for informational purposes only.)

The products manufactured in accordance with this Standard shall be produced under a quality system program following the principles of an appropriate standard from the ISO 9000 series.[1] A determination of the need for registration and/or certification of the product manufacturer's quality system program by an independent organization shall be the responsibility of the manufacturer. The detailed documentation demonstrating program compliance shall be available to the purchaser at the manufacturer's facility. A written summary description of the program utilized by the product manufacturer shall be available to the purchaser upon request. The product manufacturer is defined as the entity whose name or trademark appears on the product in accordance with the marking or identification requirements of this Standard.

[1] The series is also available from the American National Standards Institute (ANSI) and the American Society for Quality Control (ASQC) as American National Standards that are identified by a prefix "Q" replacing the prefix "ISO." Each standard of the series is listed under Annex C.

Copyright ASME International
Provided by IHS under license with ASME
No reproduction or networking permitted without license from IHS
Not for Resale

AMERICAN NATIONAL STANDARDS FOR PIPING, PIPE FLANGES, FITTINGS, AND VALVES

Scheme for the Identification of Piping Systems A13.1-1996
Pipe Threads, General Purpose (Inch) ..... B1.20.1-1983(R1992)
Dryseal Pipe Threads (Inch) ..... B1.20.3-1976(R1991)
Cast Iron Pipe Flanges and Flanged Fittings: Classes 25, 125, and 250 ..... B16.1-1998
Malleable Iron Threaded Fittings: Classes 150 and 300 ..... B16.3-1998
Gray Iron Threaded Fittings: Classes 125 and 250 ..... B16.4-1998
Pipe Flanges and Flanged Fittings (NPS ½ Through NPS 24) B16.5-1996
Factory-Made Wrought Steel Buttwelding Fittings B16.9-1993
Face-to-Face and End-to-End Dimensions of Valves B16.10-1992
Forged Fittings, Socket-Welding and Threaded B16.11-1996
Cast Iron Threaded Drainage Fittings B16.12-1998
Ferrous Pipe Plugs, Bushings, and Locknuts with Pipe Threads B16.14-1991
Cast Bronze Threaded Fittings: Classes 125 and 250 ..... B16.15-1985(R1994)
Cast Copper Alloy Solder Joint Pressure Fittings ..... B16.18-1984(R1994)
Metallic Gaskets for Pipe Flanges: Ring-Joint, Spiral-Wound, and Jacketed B16.20-1998
Nonmetallic Flat Gaskets for Pipe Flanges B16.21-1992
Wrought Copper and Copper Alloy Solder Joint Pressure Fittings B16.22-1995
Cast Copper Alloy Solder Joint Drainage Fittings — DWV B16.23-1992
Cast Copper Alloy Pipe Flanges and Flanged Fittings: Classes 150, 300, 400, 600, 900, 1500, and 2500 ..... B16.24-1991
Buttwelding Ends B16.25-1992
Cast Copper Alloy Fittings for Flared Copper Tubes B16.26-1988
Wrought Steel Buttwelding Short Radius Elbows and Returns B16.28-1994
Wrought Copper and Wrought Copper Alloy Solder Joint Drainage Fittings — DWV B16.29-1994
Cast Copper Alloy Solder Joint Fittings for Sovent Drainage Systems B16.32-1992
Manually Operated Metallic Gas Valves for Use in Gas Piping Systems up to 125 psig (Sizes ½ Through 2) B16.33-1990
Valves — Flanged, Threaded, and Welding End B16.34-1996
Orifice Flanges B16.36-1996
Large Metallic Valves for Gas Distribution (Manually Operated, NPS 2½ to 12, 125 psig Maximum) ..... B16.38-1985(R1994)
Malleable Iron Threaded Pipe Unions B16.39-1998
Manually Operated Thermoplastic Gas Shutoffs and Valves in Gas Distribution Systems ..... B16.40-1985(R1994)
Functional Qualification Requirements for Power Operated Active Valve Assemblies for Nuclear Power Plants ..... B16.41-1983(R1989)
Ductile Iron Pipe Flanges and Flanged Fittings, Classes 150 and 300 ..... B16.42-1998
Manually Operated Metallic Gas Valves for Use in House Piping Systems B16.44-1995
Cast Iron Fittings for Sovent® Drainage Systems B16.45-1998
Large Diameter Steel Flanges (NPS 26 Through NPS 60) B16.47-1996
Steel Line Blanks B16.48-1997
Power Piping B31.1-1995
Fuel Gas Piping (not an ANSI standard) B31.2-1968
Process Piping B31.3-1996
Pipeline Transportation Systems for Liquid Hydrocarbons and Other Liquids B31.4-1992
Refrigeration Piping B31.5-1992
Gas Transmission and Distribution Piping Systems B31.8-1995
Building Services Piping B31.9-1988
Slurry Transportation Piping Systems B31.11-1989
Manual for Determining the Remaining Strength of Corroded Pipelines B31G-1991
Welded and Seamless Wrought Steel Pipe B36.10M-1995
Stainless Steel Pipe ..... B36.19M-1985(R1994)
Self-Operated and Power-Operated Safety-Related Valves Functional Specification Standard ..... N278.1-1975(R1992)

The ASME Publications Catalog shows a complete list of all the Standards published by the Society. For a complimentary catalog, or the latest information about our publications, call 1-800-THE-ASME (1-800-843-2763).

Copyright ASME International
Provided by IHS under license with ASME
No reproduction or networking permitted without license from IHS
Not for Resale