STD.ASME B16.4-ENGL 1998 ■ 0759670 0617769 788 ■

ASME B16.4-1998
(Revision of ASME B16.4-1992)

GRAY IRON THREADED FITTINGS

Classes 125 and 250

AN AMERICAN NATIONAL STANDARD

The American Society of Mechanical Engineers

Copyright ASME International
Provided by IHS under license with ASME
No reproduction or networking permitted without license from IHS
Not for Resale

STD.ASME B16.4-ENGL 1998 ■ 0759670 0617770 4TT ■

The American Society of Mechanical Engineers

AN AMERICAN NATIONAL STANDARD

GRAY IRON THREADED FITTINGS

Classes 125 and 250

ASME B16.4-1998
(Revision of ASME B16.4-1992)

Copyright ASME International
Provided by IHS under license with ASME
No reproduction or networking permitted without license from IHS
Not for Resale

Date of Issuance: August 6, 1999

The 1998 edition of this Standard is being issued with an automatic addenda subscription service. The use of addenda allows revisions made in response to public review comments or committee actions to be published on a regular yearly basis; revisions published in addenda will become effective 6 months after the Date of Issuance of the addenda. The next edition of this Standard is scheduled for publication in 2003.

ASME issues written replies to inquiries concerning interpretations of technical aspects of this Standard. The interpretations will be included with the above addenda service.

ASME is the registered trademark of The American Society of Mechanical Engineers.

This code or standard was developed under procedures accredited as meeting the criteria for American National Standards. The Standards Committee that approved the code or standard was balanced to assure that individuals from competent and concerned interests have had an opportunity to participate. The proposed code or standard was made available for public review and comment that provides an opportunity for additional public input from industry, academia, regulatory agencies, and the public-at-large.

ASME does not "approve," "rate," or "endorse" any item, construction, proprietary device, or activity.

ASME does not take any position with respect to the validity of any patent rights asserted in connection with any items mentioned in this document, and does not undertake to insure anyone utilizing a standard against liability for infringement of any applicable Letters Patent, nor assumes any such liability. Users of a code or standard are expressly advised that determination of the validity of any such patent rights, and the risk of infringement of such rights, is entirely their own responsibility.

Participation by federal agency representative(s) or person(s) affiliated with industry is not to be interpreted as government or industry endorsement of this code or standard.

ASME accepts responsibility for only those interpretations issued in accordance with governing ASME procedures and policies which precludes the issuance of interpretations by individual volunteers.

No part of this document may be reproduced in any form,
in an electronic retrieval system or otherwise,
without the prior written permission of the publisher.

The American Society of Mechanical Engineers
Three Park Avenue, New York, NY 10016-5990

Copyright © 1999 by
THE AMERICAN SOCIETY OF MECHANICAL ENGINEERS
All Rights Reserved
Printed in U.S.A.

Copyright ASME International
Provided by IHS under license with ASME
No reproduction or networking permitted without license from IHS

Not for Resale

FOREWORD

In the spring of 1921, when the unification and extension of the flanged and threaded fittings standards in force in this country seemed desirable, the American Engineering Standards Committee [subsequently the American Standards Association and currently the American National Standards Institute (ANSI)] authorized the organization of a Sectional Committee on the Standardization of Pipe Flanges and Flanged Fittings. The following organizations served as joint sponsors: Heating, Piping, and Air Conditioning Contractors National Association (later the Mechanical Contractors Association of America), Manufacturers Standardization Society of the Valve and Fittings Industry, and the American Society of Mechanical Engineers.

At the second meeting of the Sectional Committee held in New York on December 16, 1921, a report was submitted by the Subcommittee on Threaded Fittings. It indicated clearly that good progress was already being made toward the development of an American Standard for cast iron threaded fittings intended for services of 125 and 250 lb steam pressure. The review of the proposals of the manufacturer's Committee of Five was assigned to the Subcommittee on Threaded Fittings, and after a thorough study, it made its report to the Sectional Committee. The Standard was finally completed, approved, and published in December, 1927 with the designation ASA B16d-1927.

To bring this Standard in line with the best current practice, a revision was begun in September, 1936, providing for hydraulic service ratings, material specifications, tolerances on alignment, threading of fittings, and dimensions of some additional sizes, as well as dimensional tables covering reducing couplings, caps, and closed- and open-pattern return bends. The revision was approved in March, 1941.

The Standard was reviewed in 1947 and was approved by the Sectional Committee. Following approval of the sponsor bodies, the Standard was presented for approval as an American Standard. It received that approval in December, 1949, and was given the new designation ASA B16.4-1949.

A review was started in 1961 by Subcommittee No. 2. A draft involving only minor changes was approved by the Sectional Committee and sponsor bodies. Final ASA approval was granted on December 26, 1963.

As the changes in organization and standards designation increased, Subcommittee No. 2 began a review in 1968. Minor changes included updating references and bringing the Standard into conformance with adopted policies of the B16 Committee. Final approval was granted by the American National Standards Institute on January 20, 1971.

In 1975, Subcommittee B (formerly 2), in its regular five-year review of the document, recommended the addition of metric (SI) equivalents and updating of referenced standards. The revised edition received approval by ANSI on August 30, 1977.

In 1982, American National Standards Committee B16 became the ASME B16 Standards Committee, operating with the same scope under ASME procedures accredited by ANSI. A new revision of the standard, including rationalization of metric equivalent dimensions and updating of referenced standards, was approved and published as ANSI/ASME B16.4-1985.

The 1992 edition of B16.4 omitted metric units, established U.S. customary units as the standard, and provided for electrodeposition as an alternative to hot dipping if zinc coating is required. Editorial revisions were made to clarify and correct the text. Following approval

Copyright ASME International
Provided by IHS under license with ASME
No reproduction or networking permitted without license from IHS
Not for Resale

by the Standards Committee and ASME, approval as an American National Standard was given on December 2, 1992, with the designation ASME B16.4-1992.

In the 1998 edition of ASME B16.4, the list of referenced standards has once again been updated, a Quality System Program Annex has been added, an issued Interpretation has been included, and several editorial revisions have been made. Following approval by ASME B16 Subcommittee B and B16 Main Committee, ANSI approved this American National Standard on November 20, 1998.

Requests for interpretation and suggestions for revision should be sent to the Secretary, B16 Committee, The American Society of Mechanical Engineers, Three Park Avenue, New York, NY 10016-5990.

Copyright ASME International
Provided by IHS under license with ASME
No reproduction or networking permitted without license from IHS
Not for Resale

ASME B16 COMMITTEE
Standardization of Valves, Flanges, Fittings, Gaskets, and Valve Actuators

(The following is the roster of the Committee at the time of approval of this Standard.)

OFFICERS

W. N. McLean, *Chair*
H. R. Sonderegger, *Vice Chair*
P. A. Reddington, *Secretary*

COMMITTEE PERSONNEL

W. L. Ballis, Consultant, London, Ohio
R. W. Barnes, Anric Enterprises, Etobicoke, Ontario, Canada
R. R. Brodin, Fisher Controls International, Inc., Marshalltown, Iowa
M. A. Clark, Nibco, Inc., Elkhart, Indiana
A. Cohen, A. Cohen and Associates, Albuquerque, New Mexico
C. E. Floren, Mueller Co., Decatur, Illinois
D. R. Frikken, Solutia, Inc., St. Louis, Missouri
R. Henrich, Minnegasco, Inc., Golden Valley, Minnesota
J. C. Inch, Mueller Refrigeration Products Co., Hartsville, Tennessee
G. A. Jolly, Vogt Valve Co., Louisville, Kentucky
W. G. Knecht, BW/IP International, Inc., Williamsport, Pennsylvania
R. Koester, The William Powell Co., Cincinnati, Ohio
W. N. McLean, Newco Valves, Palos Park, Illinois
M. L. Nayyar, Bechtel Power Corp., Gaithersburg, Maryland
P. A. Reddington, American Society of Mechanical Engineers, New York, New York
R. A. Schmidt, Trinity-Ladish Co., Russellville, Arkansas
H. R. Sonderegger, Grinnell Corp., Cranston, Rhode Island
W. M. Stephan, Flexitallic, Inc., Mount Laurel, New Jersey
T. F. Stroud, Ductile Iron Pipe Research Association, Birmingham, Alabama
M. D. Wasicek, ABS Americas, Houston, Texas
R. E. White, Richard E. White and Associates, South Bend, Indiana
D. A. Williams, Southern Company Services, Birmingham, Alabama
L. A. Willis, The Dow Chemical Co., Freeport, Texas
W. R. Worley, Union Carbide Corp., South Charleston, West Virginia

SUBCOMMITTEE B — THREADED FITTINGS (EXCEPT STEEL)

H. R. Sonderegger, *Chair,* Grinnell Corp., Cranston, Rhode Island
B. P. Feder, *Secretary,* American Society of Mechanical Engineers, New York, New York
K. Barron, Ward Manufacturing, Blossburg, Pennsylvania
M. A. Clark, Nibco, Inc., Elkhart, Indiana
A. Cohen, A. Cohen and Associates, Albuquerque, New Mexico
A. A. Knapp, Canadian Copper/Brass Development Association, North York, Ontario, Canada
R. L. Larkin, American Darling Valve, Birmingham, Alabama
P. I. McGrath, Jr., Consultant, Birmingham, Alabama
W. N. McLean, Newco Valves, Palos Park, Illinois
J. K. Schultz, Conine Manufacturing Co., Inc., Tyler, Texas

Copyright ASME International
Provided by IHS under license with ASME
No reproduction or networking permitted without license from IHS
Not for Resale

CONTENTS

Foreword iii
Standards Committee Roster v

1 Scope 1
2 Pressure–Temperature Ratings 1
3 Size 1
4 Marking 1
5 Material 1
6 Dimensions and Tolerances 1
7 Threading 2
8 Ribs 2
9 Plugs, Bushings, and Locknuts 2
10 Face Bevel 3
11 Coatings 3

Figures
1 Identification of Reducing Fittings 2
2 Gaging of Chamfered Internal Threads 3

Tables
1 Pressure–Temperature Ratings 2
2 Inspection Tolerances 3
3 Dimensions of Class 125, 90 deg and 45 deg Elbows, Tees, and Crosses (Straight Sizes) 4
4 Dimensions of Class 125, 90 deg Elbows and Crosses (Reducing Sizes) 5
5 Dimensions of Class 125 Tees (Reducing Sizes) 6
6 Dimensions of Class 125 Caps, Reducing Couplings, and Closed- and Open-Pattern Return Bends 9
7 Dimensions of Class 250, 90 deg and 45 deg Elbows, Tees, and Crosses (Straight Sizes) 10

Mandatory Annex
I References 11

Nonmandatory Annex
A Quality System Program 13

Copyright ASME International
Provided by IHS under license with ASME
No reproduction or networking permitted without license from IHS
Not for Resale

GRAY IRON THREADED FITTINGS
Classes 125 and 250

1 SCOPE

1.1 General

This Standard for gray iron threaded fittings, Classes 125 and 250, covers:

(a) pressure–temperature ratings,

(b) size and method of designating openings of reducing fittings,

(c) marking,

(d) material,

(e) dimensions and tolerances,

(f) threading, and

(g) coatings.

1.2 References

Standards and specifications adopted by reference in this Standard are shown in Mandatory Annex I.

1.3 Quality Systems

Requirements relating to the product manufacturers' Quality System Programs are described in Nonmandatory Annex A.

2 PRESSURE–TEMPERATURE RATINGS

(a) Pressure–temperature ratings for these fittings are shown in Table 1.

(b) All ratings are independent of the contained fluid and are the maximum nonshock pressures at the tabulated temperatures. Intermediate ratings may be obtained by linear interpolation between the temperatures shown.

(c) The temperatures shown for the corresponding pressure rating shall be the material temperature of the pressure-retaining structure. It may be assumed that the material temperature is the same as the fluid temperature. Use of a pressure rating at a material temperature other than that of the contained fluid is the responsibility of the user and subject to the requirements of any applicable code.

3 SIZE

(a) The sizes of the fittings scheduled in Tables 3 through 7 are identified by the corresponding nominal[1] pipe size (NPS).

(b) For reducing tees and crosses, the size of the largest run opening shall be given first, followed by the size of the opening at the opposite end of the run. Where the fitting is a tee, the size of the outlet is given last. Where the fitting is a cross, the largest side-outlet opening is the third dimension given, followed by the opposite opening. The straight-line sketches of Fig. 1 illustrate how the reducing fittings are read.

4 MARKING

(a) Each Class 125 fitting shall be marked for identification with the manufacturer's name or trademark.

(b) Each Class 250 fitting shall be marked for identification with:

(1) the manufacturer's name or trademark, and

(2) the numerals "250."

5 MATERIAL

Castings shall be produced to meet the requirements of ASTM A 126, Specification for Gray Iron Castings for Valves, Flanges, and Pipe Fittings, Class A, B or C. The manufacturer shall be prepared to certify that the product has been so produced and that the chemical and physical properties thereof, as proved by test specimens, are equal to these requirements.

6 DIMENSIONS AND TOLERANCES

(a) Tables of center-to-end dimensions are given for standard straight and reducing fittings. The sketches of fittings shown in the Standard are representative and for the purpose of illustration.

(b) The dimensions in Tables 3 through 7 of reducing

[1] The use of the word "nominal" as a modifier of a dimension or size is intended to indicate that the stated dimension or size is used for purposes of designation.

Copyright ASME International
Provided by IHS under license with ASME
No reproduction or networking permitted without license from IHS
Not for Resale

TABLE 1 PRESSURE–TEMPERATURE RATINGS

Temperature, °F	Class 125, psi	Class 250, psi
−20 to 150	175	400
200	165	370
250	150	340
300	140	310
350	125 [Note (1)]	300
400	. . .	250 [Note (2)]

NOTES:

(1) Permissible for service temperature up to 353°F reflecting the temperature of saturated steam at 125 psig.

(2) Permissible for service temperature up to 406°F reflecting the temperature of saturated steam at 250 psig.

fittings are for use only when making patterns for the specific reducing fitting in question and do not apply when a larger size pattern is bushed to make the reducing fitting wanted.

(c) It is recognized that some variations are absolutely unavoidable in the making of patterns and castings. The following tolerances shall be permitted.

(1) Metal Thickness Tolerances. Metal thickness at no point in the castings shall be less than 90% of the value given in Tables 3 through 7.

(2) Center-to-End Tolerances. Permitted tolerances on the center-to-end dimensions of the fittings are shown in Table 2. Tolerances for end-to-end dimensions and lengths of couplings and reducers shall be twice those given. The largest opening in a reducing fitting governs the tolerances to be applied to all openings. These tolerances do not apply to return bends and caps.

7 THREADING

(a) All fittings shall be threaded according to ASME B1.20.1, Pipe Threads, General Purpose (Inch), and the variations in threading shall be limited to one turn large or one turn small from the gaging notch on the plug when using working gages.

(b) The reference point for gaging internal fittings threads depends upon the chamfer diameter. When the internal chamfer diameter exceeds the major diameter of the internal thread, the reference point is the last thread scratch on the chamfer cone. When the internal chamfer diameter does not exceed the major diameter of the internal thread, the reference point is the end of the fitting (see Fig. 2).

(c) For the purpose of easier entrance in making a joint and for protection of the thread, all threads shall be countersunk a distance of not less than one-half the pitch of the thread at an angle of approximately 45 deg with the axis of the thread. Countersinking shall be concentric with the threads.

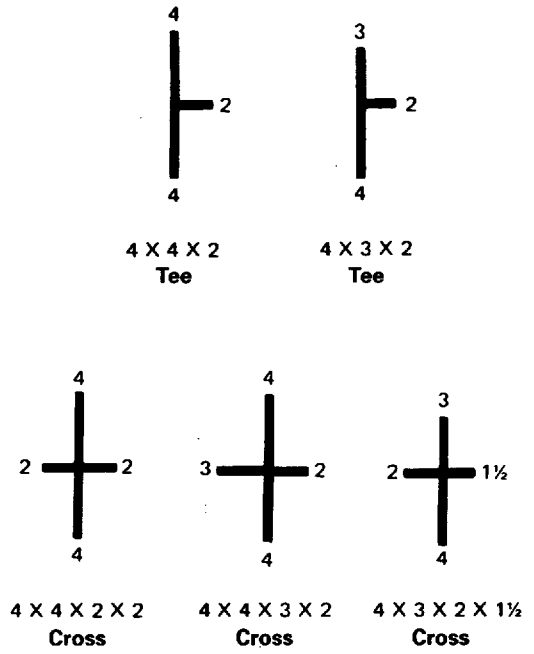

FIG. 1 IDENTIFICATION OF REDUCING FITTINGS

(d) The length of the threads specified in all tables shall be measured to include the countersink.

(e) The maximum allowable variation in the alignment of threads of all openings of threaded fittings shall be 0.06 in./ft (0.5%).

8 RIBS

(a) The addition of ribs or lugs is permitted on threaded fittings. Where ribs are used, it is recommended that their thickness shall be the same as specified for metal thickness of the fitting.

(b) Right-hand couplings shall have not more than two ribs.

(c) Right- and left-hand couplings shall have four or more ribs unless the left-hand opening is clearly marked "L," in which case the use of ribs is optional with the manufacturer.

9 PLUGS, BUSHINGS, AND LOCKNUTS

For dimensions of plugs, bushings, and locknuts to be used in connection with Class 125 and Class 250

Copyright ASME International
Provided by IHS under license with ASME
No reproduction or networking permitted without license from IHS
Not for Resale

TABLE 2 INSPECTION TOLERANCES

Nominal Pipe Size	Plus or Minus, in.
1/4	0.04
3/8	0.05
1/2, 3/4	0.06
1, 1 1/4	0.07
1 1/2, 2	0.08
2 1/2, 3, 3 1/2	0.10
4, 5	0.12
6	0.14
8	0.16
10	0.19
12	0.21

gray iron threaded fittings, see ASME B16.14, Ferrous Pipe Plugs, Bushings, and Locknuts With Pipe Threads.

10 FACE BEVEL

A bevel not exceeding 5 deg is permitted on the faces of fitting openings. Center-to-end, end-to-end, and width of band dimensions may include or exclude the bevel.

11 COATINGS

When gray iron fittings are zinc coated, they shall be hot dipped in accordance with ASTM A 153 or have an electrodeposited zinc coating conforming to ASTM B 633, Type I, Service Condition 4. Hot-dipped coatings shall be 0.0034 in. minimum thickness and applied prior to threading. Electrodeposited zinc shall be 0.001 in. minimum thickness and applied following threading.

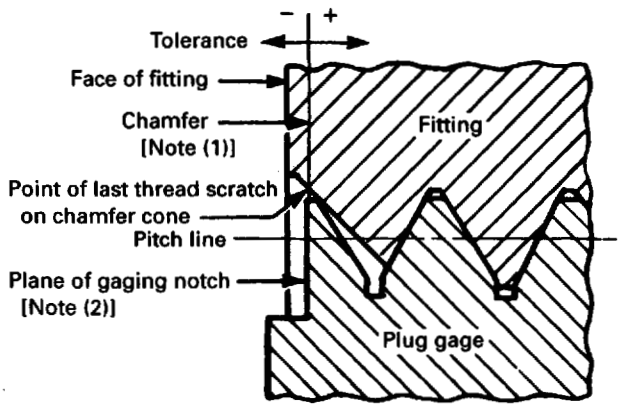

GENERAL NOTE:
Enlarged view showing chamfered internal thread of basic size with chamfer exceeding the major diameter.

NOTES:
(1) The chamfer illustrated is at a 45 deg angle and is approximately 3/8 pitch in depth. However, these details are not requirements and are given only for information on the illustration shown.
(2) Plane of gaging notch should intersect crest of thread on gage.

FIG. 2 GAGING OF CHAMFERED INTERNAL THREADS

Copyright ASME International
Provided by IHS under license with ASME
No reproduction or networking permitted without license from IHS
Not for Resale

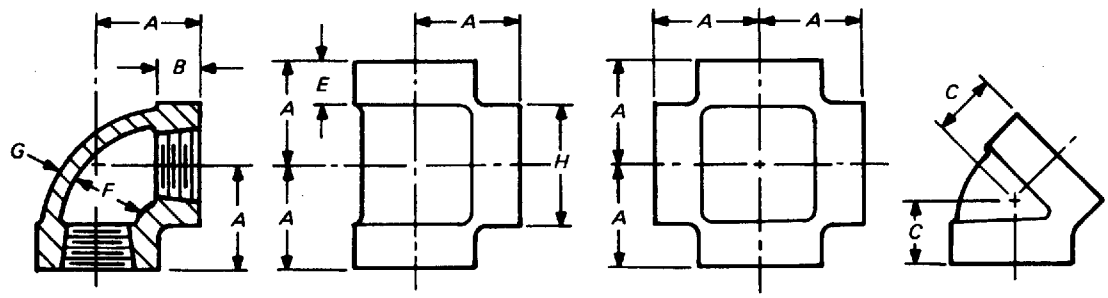

90 deg Elbow Tee Cross 45 deg Elbow

TABLE 3 DIMENSIONS OF CLASS 125, 90 deg AND 45 deg ELBOWS, TEES, AND CROSSES (STRAIGHT SIZES)

Nominal Pipe Size	Center-to-End Elbows, Tees, and Crosses, *A* [Note (1)]	Center-to-End, 45 deg Elbows, *C*	Length of Thread, Min., *B*	Width of Band, Min., *E*	Inside Diameter of Fitting, *F*		Metal Thickness, *G*	Outside Diameter of Band, Min., *H*
					Min.	Max.		
1/4	0.81	0.73	0.32	0.38	0.54	0.58	0.11	0.93
3/8	0.95	0.80	0.36	0.44	0.67	0.72	0.12	1.12
1/2	1.12	0.88	0.43	0.50	0.84	0.90	0.13	1.34
3/4	1.31	0.98	0.50	0.56	1.05	1.11	0.15	1.63
1	1.50	1.12	0.58	0.62	1.31	1.38	0.17	1.95
1 1/4	1.75	1.29	0.67	0.69	1.66	1.73	0.18	2.39
1 1/2	1.94	1.43	0.70	0.75	1.90	1.97	0.20	2.68
2	2.25	1.68	0.75	0.84	2.37	2.44	0.22	3.28
2 1/2	2.70	1.95	0.92	0.94	2.87	2.97	0.24	3.86
3	3.08	2.17	0.98	1.00	3.50	3.60	0.26	4.62
3 1/2	3.42	2.39	1.03	1.06	4.00	4.10	0.28	5.20
4	3.79	2.61	1.08	1.12	4.50	4.60	0.31	5.79
5	4.50	3.05	1.18	1.18	5.56	5.66	0.38	7.05
6	5.13	3.46	1.28	1.28	6.62	6.72	0.43	8.28
8	6.56	4.28	1.47	1.47	8.62	8.72	0.55	10.63
10	8.08	5.16	1.68	1.68	10.75	10.85	0.69	13.12
12	9.50	5.97	1.88	1.88	12.75	12.85	0.80	15.47

GENERAL NOTE: Dimensions are in inches.

NOTE:
(1) Dimensions for reducing elbows and reducing crosses are given in Table 4 and reducing tees in Table 5.

Copyright ASME International
Provided by IHS under license with ASME
No reproduction or networking permitted without license from IHS
Not for Resale

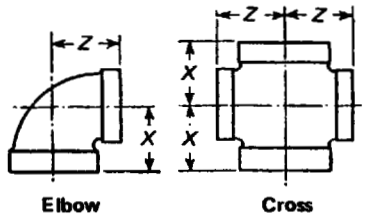

TABLE 4 DIMENSIONS OF CLASS 125, 90 deg ELBOWS AND CROSSES (REDUCING SIZES)

Elbows			Crosses		
	Center-to-End			Center-to-End	
Nominal Pipe Size	X	Z	Nominal Pipe Size	X	Z
1/2 × 3/8	1.04	1.03	3/4 × 3/4 × 1/2 × 1/2	1.20	1.22
3/4 × 1/2	1.20	1.22	1 × 1 × 3/4 × 3/4	1.37	1.45
1 × 3/4	1.37	1.45	1 1/4 × 1 1/4 × 1 × 1	1.58	1.67
1 × 1/2	1.26	1.36	1 1/4 × 1 1/4 × 3/4 × 3/4	1.45	1.62
1 1/4 × 1	1.58	1.67	1 1/2 × 1 1/2 × 1 1/4 × 1 1/4	1.82	1.88
1 1/4 × 3/4	1.45	1.62	1 1/2 × 1 1/2 × 1 × 1	1.65	1.80
1 1/4 × 1/2	1.34	1.53	1 1/2 × 1 1/2 × 3/4 × 3/4	1.52	1.75
1 1/2 × 1 1/4	1.82	1.88	2 × 2 × 1 1/2 × 1 1/2	2.02	2.16
1 1/2 × 1	1.65	1.80	2 × 2 × 1 1/4 × 1 1/4	1.90	2.10
1 1/2 × 3/4	1.52	1.75	2 × 2 × 1 × 1	1.73	2.02
1 1/2 × 1/2	1.41	1.66	2 × 2 × 3/4 × 3/4	1.60	1.97
2 × 1 1/2	2.02	2.16	2 1/2 × 2 1/2 × 2 × 2	2.39	2.60
2 × 1 1/4	1.90	2.10	2 1/2 × 2 1/2 × 1 1/2 × 1 1/2	2.16	2.51
2 × 1	1.73	2.02	2 1/2 × 2 1/2 × 1 1/4 × 1 1/4	2.04	2.45
2 × 3/4	1.60	1.97	2 1/2 × 2 1/2 × 1 × 1	1.87	2.37
2 × 1/2	1.49	1.88	3 × 3 × 2 × 2	2.57	2.89
2 1/2 × 2	2.39	2.60	3 × 3 × 1 1/2 × 1 1/2	2.29	2.80
2 1/2 × 1 1/2	2.16	2.51	3 × 3 × 1 1/4 × 1 1/4	2.17	2.74
2 1/2 × 1 1/4	2.04	2.45	3 × 3 × 1 × 1	2.00	2.66
2 1/2 × 1	1.87	2.37	3 1/2 × 3 1/2 × 2 1/2 × 2 1/2	2.93	3.24
3 × 2 1/2	2.83	2.99	3 1/2 × 3 1/2 × 2 × 2	2.62	3.14
3 × 2	2.52	2.89	3 1/2 × 3 1/2 × 1 1/2 × 1 1/2	2.39	3.05
3 × 1 1/2	2.29	2.80	4 × 4 × 3 × 3	3.30	3.60
3 × 1 1/4	2.17	2.74	4 × 4 × 2 1/2 × 2 1/2	3.05	3.51
3 1/2 × 3	3.18	3.33	4 × 4 × 2 × 2	2.74	3.41
4 × 3 1/2	3.54	3.69	4 × 4 × 1 1/2 × 1 1/2	2.51	3.32
4 × 3	3.30	3.60	5 × 5 × 4 × 4	4.00	4.41
4 × 2 1/2	3.05	3.51	5 × 5 × 3 × 3	3.51	4.22
4 × 2	2.74	3.41	5 × 5 × 2 × 2	2.95	4.03
5 × 4	4.00	4.41	6 × 6 × 4 × 4	4.13	4.94
5 × 3	3.51	4.22	6 × 6 × 3 × 3	3.64	4.75
5 × 2 1/2	3.26	4.13	6 × 6 × 2 1/2 × 2 1/2	3.39	4.66
6 × 5	4.63	5.03	6 × 6 × 2 × 2	3.08	4.56
6 × 4	4.13	4.94	8 × 8 × 6 × 6	5.56	6.37
6 × 3	3.64	4.75	8 × 8 × 4 × 4	4.50	6.17
8 × 6	5.56	6.37			

GENERAL NOTES:
(a) Dimensions are in inches.
(b) For dimensions not given, see Table 3.

Copyright ASME International
Provided by IHS under license with ASME
No reproduction or networking permitted without license from IHS
Not for Resale

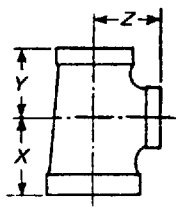

TABLE 5 DIMENSIONS OF CLASS 125 TEES (REDUCING SIZES)

Nominal Pipe Size	Center-to-End			Nominal Pipe Size	Center-to-End		
	X	Y	Z		X	Y	Z
1/2 × 1/2 × 3/8	1.04	1.04	1.03	1 1/2 × 1 1/4 × 1/2	1.41	1.34	1.66
1/2 × 1/2 × 1/4	0.97	0.97	0.98	1 1/2 × 1 × 1 1/2	1.94	1.80	1.94
3/4 × 3/4 × 1/2	1.20	1.20	1.22	1 1/2 × 1 × 1 1/4	1.82	1.67	1.88
3/4 × 3/4 × 3/8	1.12	1.12	1.13	1 1/2 × 1 × 1	1.65	1.50	1.80
3/4 × 3/4 × 1/4	1.05	1.05	1.08	1 1/2 × 3/4 × 1 1/2	1.94	1.75	1.94
3/4 × 1/2 × 3/4	1.31	1.22	1.31	1 1/2 × 3/4 × 1 1/4	1.82	1.62	1.88
3/4 × 1/2 × 1/2	1.20	1.12	1.22	1 1/2 × 1/2 × 1 1/2	1.94	1.66	1.94
1/2 × 1/2 × 3/4	1.22	1.22	1.20	1 1/4 × 1 1/4 × 1 1/2	1.88	1.88	1.82
1 × 1 × 3/4	1.37	1.37	1.45	1 1/4 × 1 × 1 1/2	1.88	1.80	1.82
1 × 1 × 1/2	1.26	1.26	1.36	1 × 1 × 1 1/2	1.80	1.80	1.65
1 × 1 × 3/8	1.18	1.18	1.27	2 × 2 × 1 1/2	2.02	2.02	2.16
1 × 3/4 × 1	1.50	1.45	1.50	2 × 2 × 1 1/4	1.90	1.90	2.10
1 × 3/4 × 3/4	1.37	1.31	1.45	2 × 2 × 1	1.73	1.73	2.02
1 × 3/4 × 1/2	1.26	1.20	1.36	2 × 2 × 3/4	1.60	1.60	1.97
1 × 1/2 × 1	1.50	1.36	1.50	2 × 2 × 1/2	1.49	1.49	1.88
1 × 1/2 × 3/4	1.37	1.22	1.45	2 × 1 1/2 × 2	2.25	2.16	2.25
1 × 1/2 × 1/2	1.26	1.12	1.36	2 × 1 1/2 × 1 1/2	2.02	1.94	2.16
1 × 3/8 × 1	1.50	1.27	1.50	2 × 1 1/2 × 1 1/4	1.90	1.82	2.10
3/4 × 3/4 × 1	1.45	1.45	1.37	2 × 1 1/2 × 1	1.73	1.65	2.02
1 1/4 × 1 1/4 × 1	1.58	1.58	1.67	2 × 1 1/2 × 3/4	1.60	1.52	1.97
1 1/4 × 1 1/4 × 3/4	1.45	1.45	1.62	2 × 1 1/2 × 1/2	1.49	1.41	1.88
1 1/4 × 1 1/4 × 1/2	1.34	1.34	1.53	2 × 1 1/4 × 2	2.25	2.10	2.25
1 1/4 × 1 × 1 1/4	1.75	1.67	1.75	2 × 1 1/4 × 1 1/2	1.02	1.88	2.16
1 1/4 × 1 × 1	1.58	1.50	1.67	2 × 1 1/4 × 1 1/4	1.90	1.75	2.10
1 1/4 × 1 × 3/4	1.45	1.37	1.62	2 × 1 1/4 × 1	1.73	1.58	2.02
1 1/4 × 1 × 1/2	1.34	1.26	1.53	2 × 1 × 2	2.25	2.02	2.25
1 1/4 × 3/4 × 1 1/4	1.75	1.62	1.75	2 × 1 × 1 1/2	2.02	1.80	2.16
1 1/4 × 3/4 × 1	1.58	1.45	1.67	2 × 1 × 1 1/4	1.90	1.67	2.10
1 1/4 × 3/4 × 3/4	1.45	1.31	1.62	2 × 3/4 × 2	2.25	1.97	2.25
1 1/4 × 1/2 × 1 1/4	1.75	1.53	1.75	2 × 1/2 × 2	2.25	1.88	2.25
1 1/4 × 1/2 × 1	1.58	1.36	1.67	1 1/2 × 1 × 2	2.16	2.02	2.02
1 × 1 × 1 1/4	1.67	1.67	1.58	1 1/4 × 1 1/4 × 2	2.10	2.10	1.90
1 1/2 × 1 1/2 × 1 1/4	1.82	1.82	1.88	1 1/2 × 1 1/2 × 2	2.16	2.16	2.02
1 1/2 × 1 1/2 × 1	1.65	1.65	1.80	1 1/2 × 1 1/4 × 2	2.16	2.10	2.02
1 1/2 × 1 1/2 × 3/4	1.52	1.52	1.75	2 1/2 × 2 1/2 × 2	2.39	2.39	2.60
1 1/2 × 1 1/2 × 1/2	1.41	1.41	1.66	2 1/2 × 2 1/2 × 1 1/2	2.16	2.16	2.51
1 1/2 × 1 1/4 × 1 1/2	1.94	1.88	1.94	2 1/2 × 2 1/2 × 1 1/4	2.04	2.04	2.45
1 1/2 × 1 1/4 × 1 1/4	1.82	1.75	1.88	2 1/2 × 2 1/2 × 1	1.87	1.87	2.37
1 1/2 × 1 1/4 × 1	1.65	1.58	1.80	2 1/2 × 2 1/2 × 3/4	1.74	1.74	2.32
1 1/2 × 1 1/4 × 3/4	1.52	1.45	1.75	2 1/2 × 2 1/2 × 1/2	1.63	1.63	2.23

(continued)

Copyright ASME International
Provided by IHS under license with ASME
No reproduction or networking permitted without license from IHS
Not for Resale

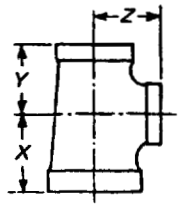

TABLE 5 DIMENSIONS OF CLASS 125 TEES (REDUCING SIZES) (CONT'D)

Nominal Pipe Size	Center-to-End			Nominal Pipe Size	Center-to-End		
	X	Y	Z		X	Y	Z
2½ × 2 × 2½	2.70	2.60	2.70	3 × ¾ × 3	3.08	2.61	3.08
2½ × 2 × 2	2.39	2.25	2.60	2½ × 2½ × 3	2.99	2.99	2.83
2½ × 2 × 1½	2.16	2.02	2.51	2½ × 2 × 3	2.99	2.89	2.83
2½ × 2 × 1¼	2.04	1.90	2.45	2 × 2 × 3	2.89	2.89	2.52
2½ × 2 × 1	1.87	1.73	2.37	3½ × 3½ × 3	3.18	3.18	3.33
2½ × 2 × ¾	1.74	1.60	2.32	3½ × 3½ × 2½	2.93	2.93	3.24
2½ × 2 × ½	1.63	1.49	2.23	3½ × 3½ × 2	2.62	2.62	3.14
2½ × 1½ × 2½	2.70	2.51	2.70	3½ × 3½ × 1½	2.39	2.39	3.05
2½ × 1½ × 2	2.39	2.16	2.60	3½ × 3½ × 1¼	2.27	2.27	2.99
2½ × 1½ × 1½	2.16	1.94	2.51	3½ × 3½ × 1	2.10	2.10	2.91
2½ × 1¼ × 2½	2.70	2.45	2.70	3½ × 3 × 3	3.18	3.08	3.33
2½ × 1¼ × 2	2.39	2.10	2.60	3½ × 3 × 2½	2.93	2.83	3.24
2½ × 1 × 2½	2.70	2.37	2.70	3½ × 3 × 2	2.62	2.52	3.14
2½ × 1 × 2	2.39	2.02	2.60	3½ × 3 × 1½	2.39	2.29	3.05
2½ × ¾ × 2½	2.70	2.32	2.70	3½ × 2½ × 3½	3.42	3.24	3.42
2½ × ½ × 2½	2.70	2.23	2.70	3½ × 2½ × 3	3.18	2.99	3.33
2 × 2 × 2½	2.60	2.60	2.39	3½ × 2½ × 2½	2.93	2.70	3.24
2 × 1½ × 2½	2.60	2.51	2.39	3½ × 2 × 3½	3.42	3.14	3.42
2 × 1¼ × 2½	2.60	2.45	2.39	3½ × 1½ × 3½	3.42	3.05	3.42
1½ × 1½ × 2½	2.51	2.51	2.16	3½ × 1¼ × 3½	3.42	2.99	3.42
3 × 3 × 2½	2.83	2.83	2.99	3½ × 1 × 3½	3.42	2.91	3.42
3 × 3 × 2	2.52	2.52	2.89	3 × 3 × 3½	3.33	3.33	3.18
3 × 3 × 1½	2.29	2.29	2.80	4 × 4 × 3½	3.54	3.54	3.69
3 × 3 × 1¼	2.17	2.17	2.74	4 × 4 × 3	3.30	3.30	3.60
3 × 3 × 1	2.00	2.00	2.66	4 × 4 × 2½	3.05	3.05	3.51
3 × 3 × ¾	1.87	1.87	2.61	4 × 4 × 2	2.74	2.74	3.41
3 × 3 × ½	1.76	1.76	2.52	4 × 4 × 1½	2.51	2.51	3.32
3 × 2½ × 3	3.08	2.99	3.08	4 × 4 × 1¼	2.39	2.39	3.26
3 × 2½ × 2½	2.83	2.70	2.99	4 × 4 × 1	2.22	2.22	3.18
3 × 2½ × 2	2.52	2.39	2.89	4 × 4 × ¾	2.09	2.09	3.13
3 × 2½ × 1½	2.29	2.16	2.80	4 × 3½ × 4	3.79	3.69	3.79
3 × 2½ × 1¼	2.17	2.04	2.74	4 × 3½ × 3½	3.54	3.42	3.69
3 × 2½ × 1	2.00	1.87	2.66	4 × 3½ × 3	3.30	3.18	3.60
3 × 2 × 3	3.08	2.89	3.08	4 × 3½ × 2½	3.05	2.93	3.51
3 × 2 × 2½	2.83	2.60	2.99	4 × 3½ × 2	2.74	2.62	3.41
3 × 2 × 2	2.52	2.25	2.89	4 × 3½ × 1½	2.51	2.39	3.32
3 × 2 × 1½	2.29	2.02	2.80	4 × 3½ × 1¼	2.39	2.27	3.26
3 × 1½ × 3	3.08	2.80	3.08	4 × 3 × 4	3.79	3.60	3.79
3 × 1¼ × 3	3.08	2.74	3.08	4 × 3 × 3	3.30	3.08	3.60
3 × 1 × 3	3.08	2.66	3.08	4 × 3 × 2½	3.05	2.83	3.51

(continued)

Copyright ASME International
Provided by IHS under license with ASME
No reproduction or networking permitted without license from IHS
Not for Resale

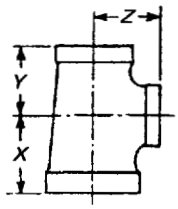

TABLE 5 DIMENSIONS OF CLASS 125 TEES (REDUCING SIZES) (CONT'D)

Nominal Pipe Size	Center-to-End			Nominal Pipe Size	Center-to-End		
	X	Y	Z		X	Y	Z
4 × 3 × 2	2.74	2.52	3.41	6 × 6 × 5	4.63	4.63	5.03
4 × 2½ × 4	3.79	3.51	3.79	6 × 6 × 4	4.13	4.13	4.94
4 × 2½ × 3	3.30	2.99	3.60	6 × 6 × 3	3.64	3.64	4.75
4 × 2½ × 2½	3.05	2.70	3.51	6 × 6 × 2½	3.39	3.39	4.66
4 × 2 × 4	3.79	3.41	3.79	6 × 6 × 2	3.08	3.08	4.56
4 × 2 × 3	3.30	2.89	3.60	6 × 6 × 1½	2.85	2.85	4.47
4 × 2 × 2	2.74	2.25	3.41	6 × 6 × 1¼	2.73	2.73	4.41
4 × 1½ × 4	3.79	3.32	3.79	6 × 6 × 1	2.56	2.56	4.33
4 × 1¼ × 4	3.79	3.26	3.79	6 × 5 × 6	5.13	5.03	5.13
4 × 1 × 4	3.79	3.18	3.79	6 × 5 × 5	4.63	4.50	5.03
3½ × 3½ × 4	3.69	3.69	3.54	6 × 5 × 4	4.13	4.00	4.94
3 × 3 × 4	3.60	3.60	3.30	6 × 5 × 3	3.64	3.51	4.75
2½ × 2½ × 4	3.51	3.51	3.05	6 × 5 × 2½	3.39	3.26	4.66
2 × 2 × 4	3.41	3.41	2.74	6 × 5 × 2	3.08	2.95	4.56
5 × 5 × 4	4.00	4.00	4.41	6 × 4 × 6	5.13	4.94	5.13
5 × 5 × 3½	3.75	3.75	4.31	6 × 4 × 5	4.63	4.41	5.03
5 × 5 × 3	3.51	3.51	4.22	6 × 4 × 4	4.13	3.79	4.94
5 × 5 × 2½	3.26	3.26	4.13	6 × 3 × 6	5.13	4.75	5.13
5 × 5 × 2	2.95	2.95	4.03	6 × 3 × 3	3.64	3.08	4.75
5 × 5 × 1½	2.72	2.72	3.94	6 × 2½ × 6	5.13	4.66	5.13
5 × 5 × 1¼	2.60	2.60	3.88	6 × 2 × 6	5.13	4.56	5.13
5 × 5 × 1	2.43	2.43	3.80	5 × 5 × 6	5.03	5.03	4.63
5 × 4 × 5	4.50	4.41	4.50	5 × 3 × 6	5.03	4.75	4.63
5 × 4 × 4	4.00	3.79	4.41	4 × 4 × 6	4.94	4.94	4.13
5 × 4 × 3½	3.75	3.54	4.31	8 × 8 × 6	5.56	5.56	6.37
5 × 4 × 3	3.51	3.30	4.22	8 × 8 × 5	5.03	5.03	6.27
5 × 4 × 2½	3.26	3.05	4.13	8 × 8 × 4	4.50	4.50	6.17
5 × 4 × 2	2.95	2.74	4.03	8 × 8 × 4	4.00	4.00	6.07
5 × 4 × 1½	2.72	2.51	3.94	8 × 8 × 2½	3.69	3.69	6.01
5 × 3 × 5	4.50	4.22	4.50	8 × 8 × 2	3.44	3.44	5.84
5 × 3 × 4	4.00	3.60	4.41	8 × 6 × 8	6.56	6.37	6.56
5 × 3 × 3	3.51	3.08	4.22	8 × 6 × 6	5.56	5.13	6.37
5 × 2½ × 5	4.50	4.13	4.50	8 × 4 × 8	6.56	6.17	6.56
5 × 2 × 5	4.50	4.03	4.50	6 × 6 × 8	6.37	6.37	5.56
4 × 4 × 5	4.41	4.41	4.00				

GENERAL NOTES:
(a) Dimensions are in inches.
(b) For dimensions not given, see Table 3.

Copyright ASME International
Provided by IHS under license with ASME
No reproduction or networking permitted without license from IHS Not for Resale

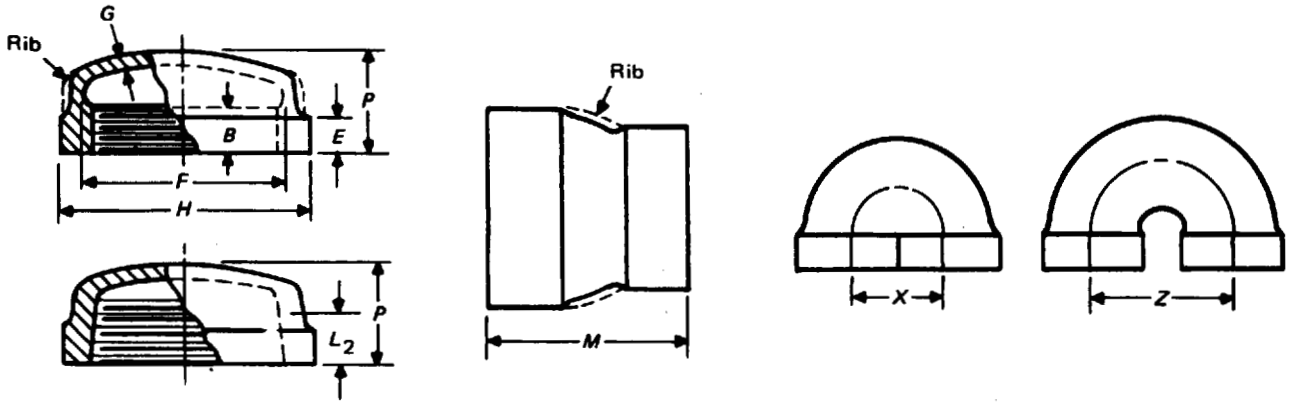

TABLE 6 DIMENSIONS OF CLASS 125 CAPS, REDUCING COUPLINGS, AND CLOSED- AND OPEN-PATTERN RETURN BENDS

Nominal Pipe Size	Length of Thread [Note (1)]		Width of Band,	Inside Diameter of Fitting, *F* [Note (1)]		Metal Thick-ness,	Outside Diameter of Band,	Length of Reducing Concentric Couplings, *M*	Height, Min.,	Center-to-Center	
	B, Min.	L_2, Min.	Min., *E*	Min.	Max.	*G*	Min., *H*	[Note (2)]	*P* [Note (1)]	Closed *X*	Open *Z*
½	0.43	...	0.50	0.84	0.90	0.13	1.34	1.38	...	1.25	1.75
¾	0.50	...	0.56	1.05	1.11	0.15	1.63	1.50	...	1.50	1.88
1	0.58	...	0.62	1.31	1.38	0.17	1.95	1.70	...	1.75	2.50
1¼	0.67	...	0.69	1.66	1.73	0.18	2.39	2.13	...	2.25	3.00
1½	0.70	...	0.75	1.90	1.97	0.20	2.68	2.25	...	2.50	3.50
2	0.75	...	0.84	2.37	2.44	0.22	3.28	2.32	...	3.25	4.50
2½	0.92	1.14	0.94	2.87	2.97	0.24	3.86	2.63	1.81	3.75	5.50
3	0.98	1.20	1.00	3.50	3.60	0.26	4.62	2.88	1.91	4.50	6.50
3½	1.03	1.25	1.06	4.00	4.10	0.28	5.20	3.13	2.03	...	...
4	1.08	1.30	1.12	4.50	4.60	0.31	5.79	3.38	2.22	6.00	7.50
5	1.18	1.41	1.18	5.56	5.66	0.38	7.05	3.57	2.38	...	...
6	1.28	1.51	1.28	6.62	6.72	0.43	8.28	3.81	2.63	...	...
8	1.47	1.71	1.47	8.62	8.72	0.55	10.63	5.25	2.88	...	...
10	1.68	1.92	1.68	10.75	10.85	0.69	13.12	...	3.50	...	...
12	1.88	2.12	1.88	12.75	12.85	0.80	15.47	...	3.88	...	...

GENERAL NOTES:
(a) Dimensions are in inches.
(b) Caps may be made flat or with a radius as shown in the illustrations.

NOTES:
(1) Caps may be made without recess. Caps so made shall be of such height *P* that the length of perfect thread shall be not less than *B*, and the length of useful thread (*B* plus threads with fully formed roots and flat crests) shall be not less than *L* (effective length of external thread) required by ASME B1.20.1, Pipe Threads, General Purpose (Inch).
(2) Dimension *M* for all reduction of reducing couplings (concentric only) shall be the same as shown for the largest opening. Dimension *M* for eccentric couplings is not standard and such information should be obtained from the manufacturer.

Copyright ASME International
Provided by IHS under license with ASME
No reproduction or networking permitted without license from IHS Not for Resale

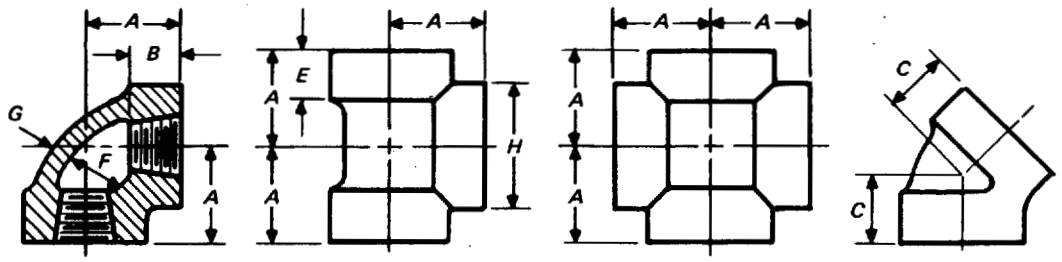

90 deg Elbow Tee Cross 45 deg Elbow

TABLE 7 DIMENSIONS OF CLASS 250, 90 deg AND 45 deg ELBOWS, TEES, AND CROSSES (STRAIGHT SIZES)

Nominal Pipe Size	Center-to-End Elbows, Tees, and Crosses, *A*	Center-to-End, 45 deg Elbows, *C*	Length of Thread, Min., *B*	Width of Band, Min., *E*	Inside Diameter of Fitting, *F*		Metal Thickness, *G*	Outside Diameter of Band, Min., *H*
					Min.	Max.		
1/4	0.94	0.81	0.43	0.49	0.54	0.58	0.18	1.17
3/8	1.06	0.88	0.47	0.55	0.67	0.72	0.18	1.36
1/2	1.25	1.00	0.57	0.60	0.84	0.90	0.20	1.59
3/4	1.44	1.13	0.64	0.68	1.05	1.11	0.23	1.88
1	1.63	1.31	0.75	0.76	1.31	1.38	0.28	2.24
1 1/4	1.94	1.50	0.84	0.88	1.66	1.73	0.33	2.73
1 1/2	2.13	1.69	0.87	0.97	1.90	1.97	0.35	3.07
2	2.50	2.00	1.00	1.12	2.37	2.44	0.39	3.74
2 1/2	2.94	2.25	1.17	1.30	2.87	2.97	0.43	4.60
3	3.38	2.50	1.23	1.40	3.50	3.60	0.48	5.36
3 1/2	3.75	2.63	1.28	1.49	4.00	4.10	0.52	5.98
4	4.13	2.81	1.33	1.57	4.50	4.60	0.56	6.61
5	4.88	3.19	1.43	1.74	5.56	5.66	0.66	7.92
6	5.63	3.50	1.53	1.91	6.62	6.72	0.74	9.24
8	7.00	4.31	1.72	2.24	8.62	8.72	0.90	11.73
10	8.63	5.19	1.93	2.58	10.75	10.85	1.08	14.37
12	10.00	6.00	2.13	2.91	12.75	12.85	1.24	16.84

GENERAL NOTES:
(a) Dimensions are in inches.
(b) The Class 250 standard for threaded fittings covers only the straight sizes of 90 deg and 45 deg elbows, tees, and crosses.

Copyright ASME International
Provided by IHS under license with ASME
No reproduction or networking permitted without license from IHS Not for Resale

STD.ASME B16.4-ENGL 1998 ■ 0759670 0617786 867 ■

MANDATORY ANNEX I
REFERENCES

The following is a list of publications referenced in this Standard.

ASME B1.20.1-1983 (R1992), Pipe Threads, General Purpose (Inch)[1]

ASME B16.14-1991, Ferrous Pipe Plugs, Bushings, and Locknuts With Pipe Threads[1]

Publisher: American Society of Mechanical Engineers (ASME), Three Park Avenue, New York, NY 10016-5990; Order Department: 22 Law Drive, Box 2300, Fairfield, NJ 07007-2300

ASTM A 126-95, Specification for Gray Iron Castings for Valves, Flanges, and Pipe Fittings

ASTM A 153/A 153M-95, Specification for Zinc Coating (Hot-Dip) on Iron and Steel Hardware

ASTM B 633-85 (R1994), Specification for Electrodeposited Coatings of Zinc on Iron and Steel

Publisher: American Society for Testing and Materials (ASTM), 100 Barr Harbor Drive, West Conshohocken, PA 19428

ISO 9000-1: 1994, Quality management and quality assurance standards, Part 1: Guidelines for selection and use

ISO 9000-2: 1997, Quality management and quality assurance standards, Part 2: Generic guidelines for the application of ISO 9001, ISO 9002, and ISO 9003

ISO 9000-3: 1991, Quality management and quality assurance standards, Part 3: Guidelines for the application of ISO 9001 to the development, supply, and maintenance of software

ISO 9001: 1994, Quality systems: Model for quality assurance in design, development, production, installation, and servicing

ISO 9002: 1994, Quality systems: Model for quality assurance in production and servicing

ISO 9003: 1994, Quality systems: Model for quality assurance in final inspection and test

Publisher: International Organization for Standardization (ISO), 1 rue de Varembé, Case Postale 56, CH-1121, Genève 20, Switzerland/Suisse

[1] May also be obtained from American National Standards Institute (ANSI), 11 West 42nd Street, New York, NY 10036.

Copyright ASME International
Provided by IHS under license with ASME
No reproduction or networking permitted without license from IHS
Not for Resale

NONMANDATORY ANNEX A
QUALITY SYSTEM PROGRAM

The products manufactured in accordance with this Standard shall be produced under a quality system program following the principles of an appropriate standard from the ISO 9000 series.[1] A determination of the need for registration and/or certification of the product manufacturer's quality system program by an independent organization shall be the responsibility of the manufacturer. The detailed documentation demonstrating program compliance shall be available to the purchaser at the manufacturer's facility. A written summary description of the program utilized by the product manufacturer shall be available to the purchaser upon request. The product manufacturer is defined as the entity whose name or trademark appears on the product in accordance with the marking or identification requirements of this Standard.

---

[1] The series is also available from the American National Standards Institute (ANSI) and the American Society for Quality (ASQ) as American National Standards that are identified by a prefix "Q" in place of the prefix "ISO." Each standard of the series is listed under Annex I.

Copyright ASME International
Provided by IHS under license with ASME
No reproduction or networking permitted without license from IHS
Not for Resale