ASME B16.4 INTERPRETATIONS

Replies to Technical Inquiries
December 2, 1992 through June 30, 1998

INTRODUCTION

As a service to persons who use the B16 standards, the B16 Committee renders interpretations of the requirements upon request. The procedure for requesting an interpretation is described in the following paragraphs.

The interpretations include all replies that have been approved by the B16 Main Committee in response to inquiries concerning interpretation of this Standard.

An interpretation applies either to the Edition and Addenda in effect on the date of issuance of the interpretation or the Edition and Addenda stated in the interpretation. Subsequent revisions to this Standard may supersede the interpretation.

PROCEDURE FOR REQUESTING INTERPRETATIONS

On request, the B16 Committee will render an interpretation of any requirement of this Standard. Interpretations can only be rendered in response to a written request, which should be addressed to: Secretary, B16 Main Committee, The American Society of Mechanical Engineers, Three Park Avenue, New York, NY 10016-5990.

The request for interpretation should be clear and unambiguous. It is further recommended that the inquirer submit his or her request using the following format:

(a) Subject. Cite the applicable paragraph number(s) and/or give a concise description of the subject.

(b) Question. Phrase the question as a request for an interpretation of a specific requirement suitable for general understanding and use, not as a request for an approval of a proprietary design or situation. The inquirer may also include any plans or drawings that are necessary to explain the question; however, they should not contain proprietary names or information.

Requests that are not in this format may be rewritten in this format prior to being answered, which may inadvertently change the original intent of the request.

ASME procedures provide for reconsideration of an interpretation when or if additional information is available that the inquirer believes might affect the interpretation. Further, persons aggrieved by an interpretation may appeal to the cognizant ASME committee or subcommittee. ASME does not "approve," "certify," "rate," or "endorse" any item, construction, proprietary device, or activity.

Copyright ASME International
Provided by IHS under license with ASME
No reproduction or networking permitted without license from IHS
Not for Resale

Interpretation: 1-1

Subject: ASME B16.4-1992, Para. 7(e), Angle Tolerance Requirement in Elbows

Date Issued: March 14, 1995

File: B16-94-008

Question: In ASME B16.4-1992, is there a tolerance requirement for the 90 deg or 45 deg angle in elbows?

Reply: Yes. The tolerance is given in para. 7(e) as an alignment variation expressed as a slope that the user of the standard may convert to an angular variation. For further clarification, see Fig. 1-1 below.

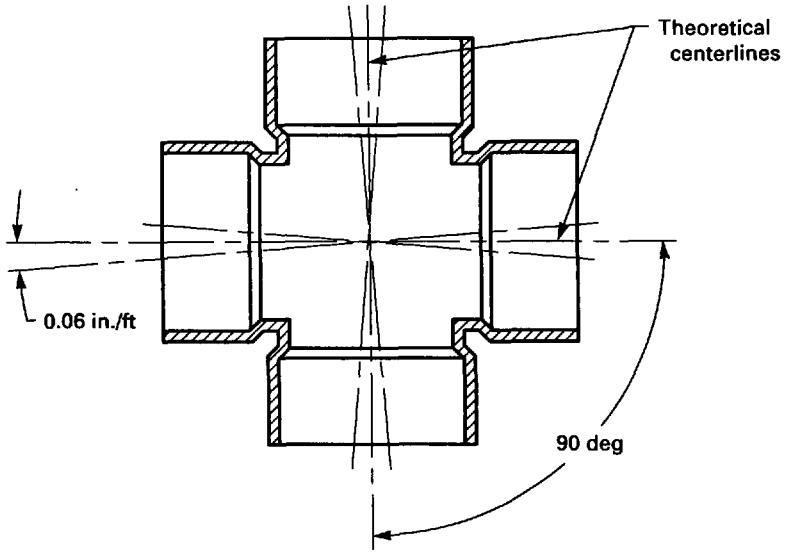

GENERAL NOTES:
(a) For illustration only; not to scale.
(b) 0.06 in./ft = 0.2865 deg.

FIG. 1-1

Copyright ASME International
Provided by IHS under license with ASME
No reproduction or networking permitted without license from IHS
Not for Resale

AMERICAN NATIONAL STANDARDS FOR PIPING, PIPE FLANGES, FITTINGS, AND VALVES

Scheme for the Identification of Piping Systems A13.1-1996
Pipe Threads, General Purpose (Inch) ..... B1.20.1-1983(R1992)
Dryseal Pipe Threads (Inch) ..... B1.20.3-1976(R1991)
Cast Iron Pipe Flanges and Flanged Fittings: Classes 25, 125, and 250 ..... B16.1-1998
Malleable Iron Threaded Fittings: Classes 150 and 300 ..... B16.3-1998
Gray Iron Threaded Fittings: Classes 125 and 250 ..... B16.4-1998
Pipe Flanges and Flanged Fittings (NPS ½ Through NPS 24) B16.5-1996
Factory-Made Wrought Steel Buttwelding Fittings B16.9-1993
Face-to-Face and End-to-End Dimensions of Valves B16.10-1992
Forged Fittings, Socket-Welding and Threaded B16.11-1996
Cast Iron Threaded Drainage Fittings B16.12-1998
Ferrous Pipe Plugs, Bushings, and Locknuts with Pipe Threads B16.14-1991
Cast Bronze Threaded Fittings: Classes 125 and 250 ..... B16.15-1985(R1994)
Cast Copper Alloy Solder Joint Pressure Fittings ..... B16.18-1984(R1994)
Metallic Gaskets for Pipe Flanges: Ring-Joint, Spiral-Wound, and Jacketed B16.20-1998
Nonmetallic Flat Gaskets for Pipe Flanges B16.21-1992
Wrought Copper and Copper Alloy Solder Joint Pressure Fittings B16.22-1995
Cast Copper Alloy Solder Joint Drainage Fittings — DWV B16.23-1992
Cast Copper Alloy Pipe Flanges and Flanged Fittings: Classes 150, 300, 400, 600, 900, 1500, and 2500 ..... B16.24-1991(R1998)
Buttwelding Ends B16.25-1997
Cast Copper Alloy Fittings for Flared Copper Tubes B16.26-1988
Wrought Steel Buttwelding Short Radius Elbows and Returns B16.28-1994
Wrought Copper and Wrought Copper Alloy Solder Joint Drainage Fittings — DWV B16.29-1994
Manually Operated Metallic Gas Valves for Use in Gas Piping Systems up to 125 psig (Sizes ½ Through 2) B16.33-1990
Valves — Flanged, Threaded, and Welding End B16.34-1996
Orifice Flanges B16.36-1996
Large Metallic Valves for Gas Distribution (Manually Operated, NPS 2½ to 12, 125 psig Maximum) ..... B16.38-1985(R1994)
Malleable Iron Threaded Pipe Unions B16.39-1998
Manually Operated Thermoplastic Gas Shutoffs and Valves in Gas Distribution Systems ..... B16.40-1985(R1994)
Ductile Iron Pipe Flanges and Flanged Fittings, Classes 150 and 300 ..... B16.42-1998
Manually Operated Metallic Gas Valves for Use in House Piping Systems B16.44-1995
Cast Iron Fittings for Sovent® Drainage Systems B16.45-1998
Large Diameter Steel Flanges (NPS 26 Through NPS 60) B16.47-1996
Steel Line Blanks B16.48-1997
Power Piping B31.1-1995
Fuel Gas Piping (not an ANSI standard) B31.2-1968
Process Piping B31.3-1999
Pipeline Transportation Systems for Liquid Hydrocarbons and Other Liquids B31.4-1992
Refrigeration Piping B31.5-1992
Gas Transmission and Distribution Piping Systems B31.8-1995
Building Services Piping B31.9-1996
Slurry Transportation Piping Systems B31.11-1989
Manual for Determining the Remaining Strength of Corroded Pipelines B31G-1991
Welded and Seamless Wrought Steel Pipe B36.10M-1996
Stainless Steel Pipe ..... B36.19M-1985(R1994)
Self-Operated and Power-Operated Safety-Related Valves Functional Specification Standard ..... N278.1-1975(R1992)

The ASME Publications Catalog shows a complete list of all the Standards published by the Society. For a complimentary catalog, or the latest information about our publications, call 1-800-THE-ASME (1-800-843-2763).

Copyright ASME International
Provided by IHS under license with ASME
No reproduction or networking permitted without license from IHS
Not for Resale

ASME Services

ASME is committed to developing and delivering technical information. At ASME's Information Central, we make every effort to answer your questions and expedite your orders. Our representatives are ready to assist you in the following areas:

ASME Press
Codes & Standards
Credit Card Orders
IMechE Publications
Meetings & Conferences
Member Dues Status
Member Services & Benefits
Other ASME Programs
Payment Inquiries
Professional Development
Short Courses
Publications
Public Information
Self-Study Courses
Shipping Information
Subscriptions/Journals/Magazines
Symposia Volumes
Technical Papers

How can you reach us? It's easier than ever!

There are four options for making inquiries* or placing orders. Simply mail, phone, fax, or E-mail us and an Information Central representative will handle your request.

Mail
ASME
22 Law Drive, Box 2900
Fairfield, New Jersey
07007-2900

Call Toll Free
US & Canada: 800-THE-ASME
(800-843-2763)
Mexico: 95-800-THE-ASME
(95-800-843-2763)
Universal: 973-882-1167

Fax-24 hours
973-882-1717
973-882-5155

E-Mail-24 hours
Infocentral
@asme.org

* Information Central staff are not permitted to answer inquiries about the technical content of this code or standard. Information as to whether or not technical inquiries are issued to this code or standard is shown on the copyright page. All technical inquiries must be submitted in writing to the staff secretary. Additional procedures for inquiries may be listed within.

Copyright ASME International
Provided by IHS under license with ASME
No reproduction or networking permitted without license from IHS
Not for Resale

STD.ASME B16.4 INTERPRETATIONS-ENGL 1998 ■ 0759670 0617792 060 ■

ISBN 0-7918-2575-2





J02298

Copyright ASME International
Provided by IHS under license with ASME
No reproduction or networking permitted without license from IHS

Not for Resale