INDD B16.36 88 ■ 2595512 0078093 T48 ■

ADOPTION NOTICE

ASME-B16.36, "Flanges, Orifice," was adopted on October 3, 1994 for use by the Department of Defense (DoD). Proposed changes by DoD activities must be submitted to the DoD Adopting Activity: Commanding Officer, Naval Construction Battalion Center, Code 156, 1000 23rd Avenue, Port Hueneme, CA 93043-4301. DoD activities may obtain copies of this standard from the Standardization Document Order Desk, 700 Robbins Avenue, Building 4D, Philadelphia, PA 19111-5094. The private sector and other Government agencies may purchase copies from the American Society of Mechanical Engineers, 345 East 47th Street, New York, NY 10017.

Custodians:
Army - ME
Navy - YD-1
Air Force - 99

Adopting Activity
Navy - YD-1

FSC 4730

DISTRIBUTION STATEMENT A. Approved for public release; distribution is unlimited.

Copyright ASME International
Provided by IHS under license with ASME
No reproduction or networking permitted without license from IHS
Not for Resale

STD.ASME B16.36-ENGL 1996 0759670 0579291 T44

ASME B16.36-1996

(Revision of ASME/ANSI B16.36-1988)

ORIFICE FLANGES

AN AMERICAN NATIONAL STANDARD

The American Society of Mechanical Engineers

Copyright ASME International
Provided by IHS under license with ASME
No reproduction or networking permitted without license from IHS

Not for Resale

The American Society of
Mechanical Engineers

AN AMERICAN NATIONAL STANDARD

ORIFICE FLANGES

ASME B16.36-1996

(Revision of ASME/ANSI B16.36-1988)

Copyright ASME International
Provided by IHS under license with ASME
No reproduction or networking permitted without license from IHS

Not for Resale

Date of Issuance: January 31, 1997

The 1996 edition of this Standard is being issued with an automatic addenda subscription service. The use of an addenda allows revisions made in response to public review comments or committee actions to be published as necessary; revisions published in addenda will become effective 6 months after the Date of Issuance of the addenda. The next edition of this Standard is scheduled for publication in 2001.

ASME issues written replies to inquiries concerning interpretations of technical aspects of this Standard. The interpretations will be included with the above addenda service. Interpretations are not part of the addenda to the Standard.

ASME is the registered trademark of the American Society of Mechanical Engineers.

This code or standard was developed under procedures accredited as meeting the criteria for American National Standards. The Consensus Committee that approved the code or standard was balanced to assure that individuals from competent and concerned interests have had an opportunity to participate. The proposed code or standard was made available for public review and comment which provides an opportunity for additional public input from industry, academia, regulatory agencies, and the public-at-large.

ASME does not "approve," "rate," or "endorse" any item, construction, proprietary device, or activity.

ASME does not take any position with respect to the validity of any patent rights asserted in connection with any items mentioned in this document, and does not undertake to insure anyone utilizing a standard against liability for infringement of any applicable Letters Patent, nor assume any such liability. Users of a code or standard are expressly advised that determination of the validity of any such patent rights, and the risk of infringement of such rights, is entirely their own responsibility.

Participation by federal agency representative(s) or person(s) affiliated with industry is not to be interpreted as government or industry endorsement of this code or standard.

ASME accepts responsibility for only those interpretations issued in accordance with governing ASME procedures and policies which preclude the issuance of interpretations by individual volunteers.

No part of this document may be reproduced in any form,
in an electronic retrieval system or otherwise,
without the prior written permission of the publisher.

The American Society of Mechanical Engineers
345 East 47th Street, New York, NY 10017

Copyright © 1997 by
THE AMERICAN SOCIETY OF MECHANICAL ENGINEERS
All Rights Reserved
Printed in U.S.A.

Copyright ASME International
Provided by IHS under license with ASME
No reproduction or networking permitted without license from IHS

Not for Resale

FOREWORD

(This Foreword is not part of ASME B16.36-1996.)

August of 1956 marked the first recorded correspondence noting the lack of standardization for orifice flanges. There were, and still are, several codes for the performance and calibration of orifice flanges, but there had been no standardization of the flanges themselves. Over the ensuing 3 years, correspondence continued among the Instrument Society of America, American Gas Association, and the B16 Standards Committee.

On December 3, 1959, Subcommittee 3 (now Subcommittee C) of B16 authorized the appointment of a Task Force to undertake drafting of a standard. Although the intial work progressed smoothly, a controversy developed over the standard size of taps to be specified for the flanges. This required many years to resolve. It was finally achieved in 1973 with the issuance of a draft from the Task Force. Comments and objections to this draft from members of Subcommittee C were resolved, and a redraft was approved by the Subcommittee late in 1974. The B16 Standards Committee was balloted in the spring of 1975 and approval was gained. Comments from B16 members from the gas industry requested that the Class 400 orifice flange be included, and the B16 Subcommittee C agreed to consider this for a possible addendum. The Standard was approved by ANSI on August 15, 1975.

On April 30, 1979, an addenda was issued which added Class 400 flanges and Annex B covering reference documents and organizations.

In 1982, American National Standards Committee B16 was reorganized as an ASME Committee operating under procedures accredited by ANSI. In the 1988 edition, figures were added to illustrate jack bolts and corner taps, metric units have been omitted, and references to other standards have been updated. Following approval by the B16 Main Committee and the ASME Supervisory Board, the Standard was approved as an American National Standard by ANSI on February 18, 1988.

This 1996 Edition adds angular meter taps for ring joint flanges in sizes not previously covered and includes several other revisions. Following approval by the B16 Main Committee and the ASME Supervisory Board, this Standard was approved as an American National Standard by ANSI on November 6, 1996.

Requests for interpretations or suggestions for revisions should be sent to the Secretary, B16 Committee, The American Society of Mechanical Engineers, United Engineering Center, 345 East 47th Street, New York, NY 10017.

Copyright ASME International
Provided by IHS under license with ASME
No reproduction or networking permitted without license from IHS
Not for Resale

ASME B16 COMMITTEE
Standardization of Valves, Flanges, Fittings, Gaskets, and Valve Actuators

(The following is the roster of the Committee at the time of approval of this Standard.)

OFFICERS

W. N. McLean, *Chair*
R. A. Schmidt, *Vice Chair*
K. M. Ciciora, *Secretary*

COMMITTEE PERSONNEL

W. L. Ballis, Columbia Gas Distribution Co., Columbus, Ohio
R. R. Brodin, Fisher Controls International, Inc., Marshalltown, Iowa
M. A. Clark, Nibco Inc., Elkhart, Indiana
A. Cohen, Copper Development Association, Inc., New York, New York
W. C. Farrell, Jr., Consultant, Birmingham, Alabama
C. E. Floren, Mueller Co., Decatur, Illinois
D. R. Frikken, Monsanto Co., St. Louis, Missouri
M. W. Garland, Frick Co., Waynesboro, Pennsylvania
J. C. Inch, Mueller Refrigeration Products Co., Hartsville, Tennessee
G. A. Jolly, The Henry Vogt Machine Co., Louisville, Kentucky
W. G. Knecht, Consultant, Williamsport, Pennsylvania
R. A. Koester, The William Powell Co., Cincinnati, Ohio
W. N. McLean, Newco Valve Co., Palos Park, Illinois
M. L. Nayyar, Bechtel Corp., Gaithersburg, Maryland
R. A. Schmidt, Ladish Co., Russellville, Arkansas
W. M. Stephan, Flexitallic Inc., Pennsauken, New Jersey
T. F. Stroud, Ductile Iron Research Association, Birmingham, Alabama
M. D. Wasicek, ABS Americas, Houston, Texas
R. E. White, Richard E. White & Associates, South Bend, Indiana
D. A. Williams, Southern Company Services, Birmingham, Illinois
L. A. Willis, Dow Chemical Co., Freeport, Texas
W. R. Worley, Union Carbide Corp., South Charleston, West Virginia

PERSONNEL OF SUBCOMMITTEE C — STEEL FLANGES AND FLANGED FITTINGS

D. R. Frikken, *Chair,* Monsanto Co., St. Louis, Missouri
K. M. Ciciora, *Secretary,* ASME International, New York, New York
V. C. Bhasin, Sigmatech, Pittsburgh, Pennsylvania
G. D. Conlee, Consultant, St. Louis, Missouri
W. C. Farrell, Jr. Consultant, Birmingham, Alabama
M. L. Henderson, Coffer Corp., Houston, Texas
R. E. Johnson, Flowline Div., New Castle, Pennsylvania
R. Koester, The William Powell Co., Cincinnati, Ohio
R. Madewell, Flo-Bend Inc., Sand Springs, Oklahoma

Copyright ASME International
Provided by IHS under license with ASME
No reproduction or networking permitted without license from IHS
Not for Resale

W. N. McLean, Newco Valve Co., Palos Park, Illinois
M. L. Nayyar, Bechtel Corp., Gaithersburg, Maryland
R. A. Schmidt, Ladish Co., Russellville, Arkansas
D. L. Shira, Taylor Forge, Cordova, Tennessee
J. C. Thompson, Milwaukee Valve, Rising Sun, Maryland
L. A. Willis, Dow Chemical Co., Freeport, Texas

Copyright ASME International
Provided by IHS under license with ASME
No reproduction or networking permitted without license from IHS
Not for Resale

CONTENTS

Foreword iii
Standards Committee Roster v

1 Scope 1
2 Pressure–Temperature Ratings 1
3 Material 1
4 Size 1
5 Marking 1
6 Flange Facing Finish 2
7 Gaskets for Raised Face Flanges 2
8 Pressure Taps 2
9 Jack Screw Provision 2
10 Dimensions 2
11 Flange Threads 2
12 Tolerances 3

Figures
1 Corner Taps 4
2 Jack Bolts 4
3 Angular Meter Tap for RTJ Flanges 5

Tables
1 Class 300 Orifice Flanges, Welding Neck, Slip-On, and Threaded 6
2 Class 400 Orifice Flanges, Welding Neck 8
3 Class 600 Orifice Flanges, Welding Neck 10
4 Class 900 Orifice Flanges, Welding Neck 12
5 Class 1500 Orifice Flanges, Welding Neck 14
6 Class 2500 Orifice Flanges, Welding Neck 16

Annex
A Quality System Program 17
B References 19

Interpretations 21

Copyright ASME International
Provided by IHS under license with ASME
No reproduction or networking permitted without license from IHS
Not for Resale

ORIFICE FLANGES
Classes 300, 400, 600, 900, 1500, and 2500

1 SCOPE

1.1 General

This Standard covers flanges (similar to those covered in ASME B16.5) that have orifice pressure diffential connections. Coverage is limited to the following:

(a) welding neck flanges Classes 300, 400, 600, 900, 1500, and 2500

(b) slip-on and threaded Class 300

1.2 References

1.2.1 Referenced Standards. Standards and specifications adopted by reference in this Standard are shown in Annex B, which is part of this Standard. It is not considered practical to identify the specific edition of each standard and specification in the individual references. Instead, the specific edition reference is identified in Annex B. A flange manufactured in accordance with earlier editions of the referenced standards and in all other respects conforming to this Standard will be considered to be in accordance with this Standard.

1.2.2 Codes and Regulations. A flange used under the jurisdiction of the ASME Boiler and Pressure Vessel Code, the ASME Code for Pressure Piping, or a governmental regulation is subject to any limitation of that Code or regulation. This includes any maximum temperature limitation, or rules governing the use of a material at low temperature, or provisions for operation at pressure exceeding the pressure–temperature ratings in this Standard.

1.3 Content

The requirements of this Standard include:

(a) pressure ratings

(b) marking

(c) materials

(d) dimensions

(e) tolerances

1.4 Quality Systems

Non-mandatory requirements relating to the product manufacturer's Quality System Program are described in Annex A.

2 PRESSURE–TEMPERATURE RATINGS

The pressure–temperature ratings, including all use recommendations and limitations, and the method of rating given in ASME B16.5 apply to these flanges.

3 MATERIAL

3.1 General

Flange materials shall meet all requirements of ASME B16.5.

3.2 Bolting

Material shall be in accordance with ASME B16.5.

3.3 Plugs

Pressure retaining plugs shall conform to ASME B16.11, unless otherwise agreed between purchaser and manufacturer. Plug material shall be at least as corrosion resistant as the corresponding flange material.

4 SIZE

Orifice flange sizes are indicated by the nominal pipe size to which they are attached. Only those listed in Tables 1 through 6 are considered standard.

5 MARKING

Flanges shall be marked as required in ASME B16.5. For welding neck flanges only, the bore diameter shall be marked.

Copyright ASME International
Provided by IHS under license with ASME
No reproduction or networking permitted without license from IHS
Not for Resale

6 FLANGE FACING FINISH

The finish of contact faces shall conform to the requirements of ASME B16.5.

7 GASKETS FOR RAISED FACE FLANGES

7.1 Gasket Thickness

Flange dimensions are based on the use of 0.06 in. thick gaskets.[1]

7.2 Gasket Thickness

If gaskets of differing hardness and compressibility are used, the rules of Annex E of ASME B16.5 shall govern.

8 PRESSURE TAPS

8.1 General

Each orifice flange is provided with two pressure tap holes extending radially from the outside diameter of the flange to the inside diameter of the flange. Corner taps may be used on NPS $1\frac{1}{2}$ and smaller if space permits. See Fig. 1. For ring joint flanges listed in Tables 2 through 6, where radial taps will interfere with the ring groove, angular meter taps, as illustrated in Fig. 3, will be required. Each pressure tap hole shall be equipped with a pipe plug.

8.2 Location

The 0.94 in. locating dimension for raised face and 0.75 in. for ring joint[1] shall be measured at the bore.

8.3 Pipe Connection

Unless otherwise specified, pressure tap holes may be either tapped $\frac{1}{2}$ NPT or $\frac{1}{2}$ NPS socket connection in accordance with AME B16.11.

[1] When the location of the pressure tap with respect to the orifice plate is critical for the service and metering conditions, its location may be altered to accomodate other than 0.06 in. thick gaskets or ring type joint gaskets whose thickness may vary from that listed in Tables 2, 3, 4, 5, and 6.

The alteration of location may also be accomplished by the removal of 0.06 in. from the raised face of the flange. If an original 0.06 in. high raised face is removed, the user is cautioned to limit the outside diameter of the gasket or orifice plate to the tabulated *R* dimension.

9 JACK SCREW PROVISION

9.1 Location

Each flange shall have a machine bolt mounted in a hole drilled on the flange center line at 90 deg. from the pressure taps, for use as a jack screw. Machine bolt shall be regular with one heavy hex nut. See Fig. 2.

9.2 Slot for Nut

A slot shall be provided in the flange 0.06 in. wider than the width across flats of the nut. The depth of the slot shall admit the nut so that there is no interference with the joining of the flanges when bolted together without orifice plate.

9.3 Tapped Hole

As an alternative to para. 9.2., a tapped hole may be provided and the hex nut omitted when agreed on between the purchaser and the manufacturer.

10 DIMENSIONS

10.1 Flange Dimensions

Dimensions are listed in Tables 1, 2, 3, 4, 5, and 6.

10.2 Gasket Dimensions

Gasket dimensions shall be in accordance with Appendix E of ASME B16.5.

11 FLANGE THREADS

Threaded flanges shall have an American National Standard taper pipe thread conforming to ASME B1.20.1.

(a) The thread shall be concentric with the axis of the flange. Variations in alignment shall not exceed 0.06 in./ft. (0.5%).

(b) The flanges are made with counterbores at the back of the flange and the threads shall be chamfered to the diameter of the counterbore at an angle of approximately 45 deg. with the axis of the thread to afford easy entrance in making a joint. The counterbore and chamfer shall be concentric with the thread.

(c) In order to permit the pipe to be inserted to the face of the flange, the threads should have full root diameters through to the face of the flange, or shall have a counterbore at the face of the flange.

Copyright ASME International
Provided by IHS under license with ASME
No reproduction or networking permitted without license from IHS
Not for Resale

STD.ASME B16.36-ENGL 1996 ■ 0759670 0579300 887 ■

(d) The gaging notch of the working gage shall come flush with the bottom of the chamfer in all threaded flanges and shall be considered as being the intersection of the chamfer cone and the pitch cone of the thread. This depth of chamfer is approximately equal to one-half (½) the pitch of the thread.

(e) The maximum allowable thread variation is one turn large or small from the gaging notch.

12 TOLERANCES

Tolerances on all dimensions shall be as shown in ASME B16.5 except for those shown below.

12.1 Pressure Tap Location

Tolerance on location of center of pressure tap hole[2] from flange face shall be:

(a) flanges smaller than NPS 4, ±0.02 in.

(b) flanges NPS 4 and larger, ±0.03 in.

12.2 Bore Diameter

Bore diameter tolerance (welding neck flanges only) is ±0.5% of nominal value.

[2] See para. 8.2.

Copyright ASME International
Provided by IHS under license with ASME
No reproduction or networking permitted without license from IHS
Not for Resale

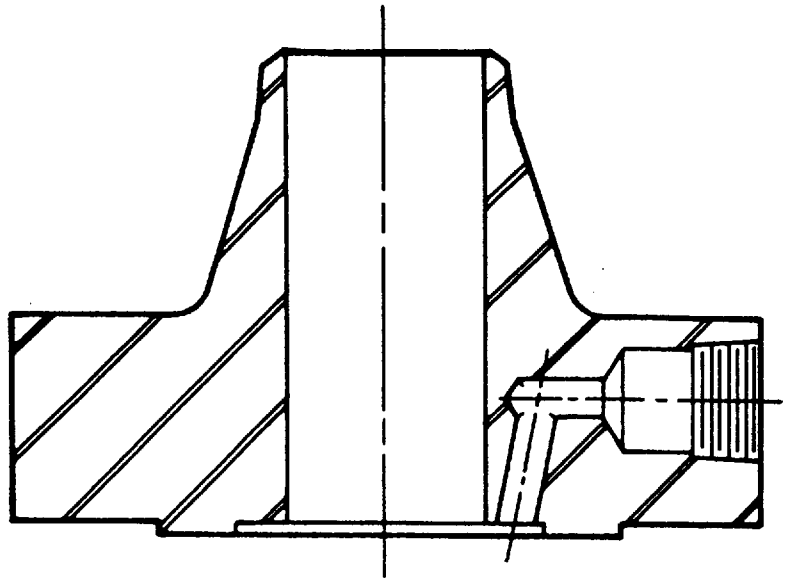

FIG. 1 CORNER TAPS

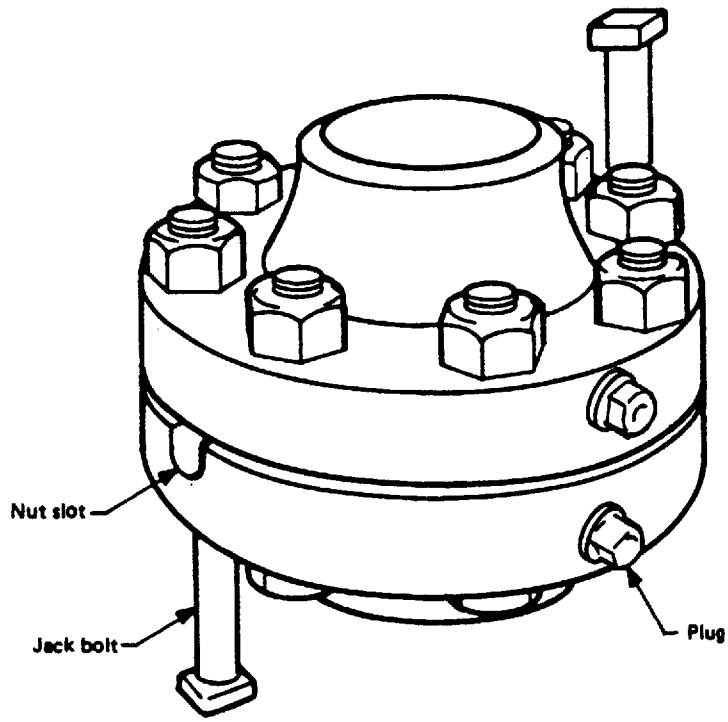

FIG. 2 JACK BOLTS

Copyright ASME International
Provided by IHS under license with ASME
No reproduction or networking permitted without license from IHS
Not for Resale

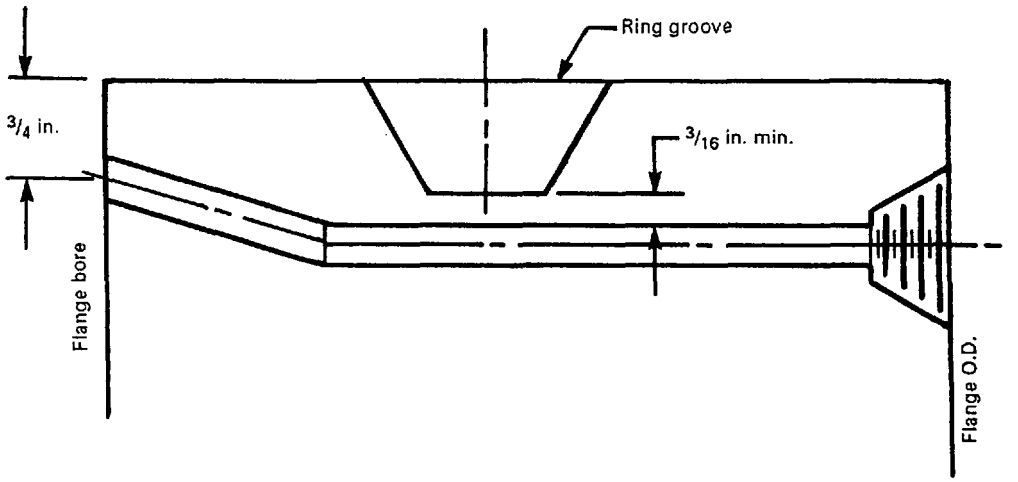

FIG. 3 ANGULAR METER TAP FOR RTJ FLANGES

Copyright ASME International
Provided by IHS under license with ASME
No reproduction or networking permitted without license from IHS Not for Resale

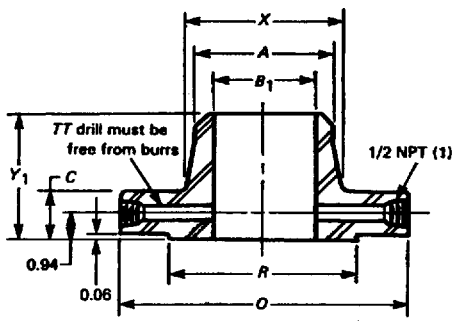

Weld Neck

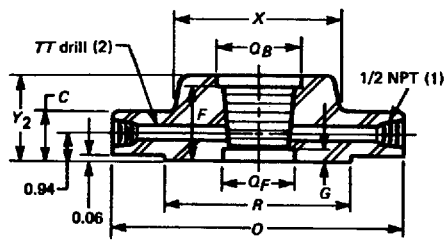

Threaded

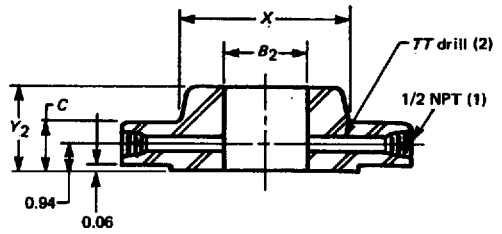

Slip-on

TABLE 1 CLASS 300 ORIFICE FLANGES, WELDING NECK, SLIP-ON, AND THREADED[3,4]

Nominal Pipe Size	Outside Diameter of Raised Face *R*	Outside Diameter of Flange *O*	Thickness of Flange, Min. *C*	Length Through Hub: Slip-On and Threaded Y_2	Length Through Hub: Weld Neck Y_1	Diameter of Hub *X*	Hub Diameter Beginning of Chamfer (W.N.) *A*	Diameter of Counterbore: Back Q_B	Diameter of Counterbore: Face Q_F	Counterbore Depth (From Face): *F*	Counterbore Depth (From Face): *G*	Bore: Slip-On B_2	Bore: Weld Neck B_1	Diameter of Pressure Connection *TT*	Drilling Template: Bolt Circle	Drilling Template: Number of Holes	Drilling Template: Diameter of Holes	Drilling Template: Diameter of Bolts	Bolt Length [(5), (6)]: Machine Bolts	Bolt Length [(5), (6)]: Stud Bolts
1	2.00	4.88	1.50	1.88	3.25	2.12	1.32	1.41	1.30	1.44	0.75	1.36	See Note (7).	1/4	3.50	4	0.69	5/8	4.50	5.00
1 1/2	2.88	6.12	1.50	1.88	3.38	2.75	1.90	1.99	1.89	1.47	0.72	1.95		1/4	4.50	4	0.81	3/4	4.75	5.25
2	3.62	6.50	1.50	1.94	3.38	3.31	2.38	2.50	2.36	1.50	0.69	2.44		1/4	5.00	8	0.69	5/8	4.50	5.00
2 1/2	4.12	7.50	1.50	2.00	3.50	3.94	2.88	3.00	2.84	1.75	0.56	2.94		1/4	5.88	8	0.81	3/4	4.75	5.25
3	5.00	8.25	1.50	2.06	3.50	4.62	3.50	3.63	3.46	1.81	0.56	3.57		3/8	6.62	8	0.81	3/4	4.75	5.25
4	6.19	10.00	1.50	2.12	3.62	5.75	4.50	4.63	4.45	1.88	0.56	4.57		1/2	7.88	8	0.81	3/4	4.75	5.25
6	8.50	12.50	1.50	2.12	3.94	8.12	6.63	6.75	6.57	1.88	0.31	6.72		1/2	10.62	12	0.88	3/4	4.75	5.25
8	10.62	15.00	1.62	2.44	4.38	10.25	8.63	8.75	8.55	2.19	0.44	8.72		1/2	13.00	12	1.00	7/8	5.00	5.75
10	12.75	17.50	1.88	2.62	4.62	12.62	10.75					10.88		1/2	15.25	16	1.12	1	5.75	6.50
12	15.00	20.50	2.00	2.88	5.12	14.75	12.75					12.88		1/2	17.75	16	1.25	1 1/8	6.25	7.00
14	16.25	23.00	2.12	3.00	5.62	16.75	14.00					14.14		1/2	20.25	20	1.25	1 1/8	6.50	7.25
16	18.50	25.50	2.25	3.25	5.75	19.00	16.00	See Note (8).				16.16		1/2	22.50	20	1.38	1 1/4	7.00	7.75
18	21.00	28.00	2.38	3.50	6.25	21.00	18.00					18.18		1/2	24.75	24	1.38	1 1/4	7.25	8.00
20	23.00	30.50	2.50	3.75	6.38	23.12	20.00					20.20		1/2	27.00	24	1.38	1 1/4	7.50	8.50
24	27.25	36.00	2.75	4.19	6.62	27.62	24.00					24.25		1/2	32.00	24	1.62	1 1/2	8.25	9.50

Copyright ASME International
Provided by IHS under license with ASME
No reproduction or networking permitted without license from IHS
Not for Resale

GENERAL NOTE: Dimensions are in inches.

NOTES:
(1) Other NPT sizes may be furnished if required.
(2) For slip-on and threaded flanges, verify that 77 drilling extends to inside diameter of pipe after assembly and is free from burrs.
(3) Weld neck flanges NPS 3 and smaller are identical to Class 600 flanges and may be so marked.
(4) All other dimensions are in accordance with ASME B16.5.
(5) Bolt lengths include allowance for orifice and gasket thickness of 0.25 in. for NPS 1–12 and 0.38 in. for NPS 14–24.
(6) In conformance with ASME B16.5, stud bolt lengths do not include point heights.
(7) Bore diameter of weld neck flanges is to be specified by the purchaser.
(8) Threaded flanges are furnished in NPS 1–8 only.

Copyright ASME International
Provided by IHS under license with ASME
No reproduction or networking permitted without license from IHS

Not for Resale

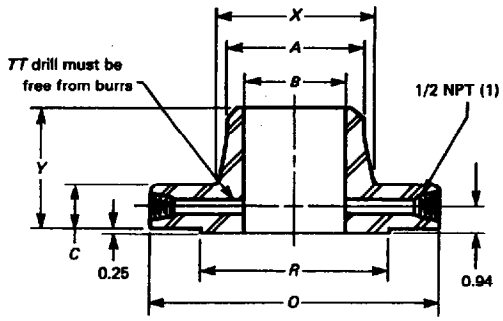

Raised Face

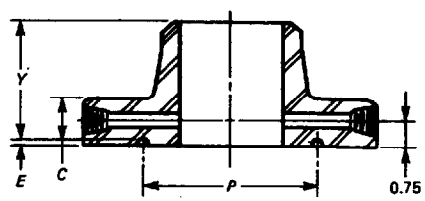

Ring Type Joint



Special One or Two Piece Ring and Orifice Plate Assembly

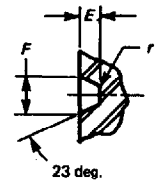

Groove Detail

TABLE 2 CLASS 400 ORIFICE FLANGES, WELDING NECK[2]

Nominal Pipe Size	Outside Diameter of Raised Face *R*	Outside Diameter of Flange *O*	Thickness of Flange, Min. *C*	Length Through Hub *Y*	Ring Type Joint						Diameter of Hub *X*	Hub Diameter Beginning of Chamfer *A*	Bore *B*	Diameter of Pressure Connection *TT*	Drilling Template				Length of Stud Bolts [(3), (4)]	
					Groove Number	Pitch Diameter *P*	Groove Depth *E*	Groove Width *F*	Radius at Bottom r_{max}	Special Oval Ring Height *W*					Diameter of Bolt Circle	Number of Holes	Diameter of Holes	Diameter of Bolts	Raised Face	Ring Joint
1 1½ 2 2½ 3	For NPS 3 and smaller, use Class 600.																			
4	6.19	10.00	1.50	3.50	R37	5.875	0.312	0.469	0.03	1.06	5.75	4.50	See Note (5).	½	7.88	8	1.00	⅞	5.50	6.00
6	8.50	12.50	1.62	4.06	R45	8.312	0.312	0.469	0.03	1.06	8.12	6.63		½	10.62	12	1.00	⅞	6.25	6.50
8	10.62	15.00	1.88	4.62	R49	10.625	0.312	0.469	0.03	1.06	10.25	8.63		½	13.00	12	1.12	1	6.75	7.25
10	12.75	17.50	2.12	4.88	R53	12.750	0.312	0.469	0.03	1.06	12.62	10.75		½	15.25	16	1.25	1⅛	7.50	8.00
12	15.00	20.50	2.25	5.38	R57	15.000	0.312	0.469	0.03	1.06	14.75	12.75		½	17.75	16	1.38	1¼	8.00	8.50
14	16.25	23.00	2.39	5.88	R61	16.500	0.312	0.469	0.03	1.06	16.75	14.00		½	20.25	20	1.38	1¼	8.25	9.00
16	18.50	25.50	2.50	6.00	R65	18.500	0.312	0.469	0.03	1.19	19.00	16.00		½	22.50	20	1.50	1⅜	8.75	9.25
18	21.00	28.00	2.62	6.50	R69	21.000	0.312	0.469	0.03	1.19	21.00	18.00		½	24.75	24	1.50	1⅜	9.25	9.50
20	23.00	30.50	2.75	6.62	R73	23.000	0.375	0.531	0.06	1.25	23.12	20.00		½	27.00	24	1.62	1½	9.75	10.25
24	27.25	36.00	3.00	6.88	R77	27.250	0.938	0.656	0.06	1.44	27.62	24.00		½	32.00	24	1.88	1¾	11.00	11.50

Copyright ASME International
Provided by IHS under license with ASME
No reproduction or networking permitted without license from IHS
Not for Resale

GENERAL NOTE: Dimensions are in inches.

NOTES:
(1) Other NPT sizes may be furnished if required.
(2) All other dimensions are in accordance with ASME B16.5.
(3) In conformance with ASME B16.5, stud bolt lengths do not include point heights.
(4) Bolt lengths for raised face flanges include allowance for orifice and gasket thickness of 0.25 in. for NPS 4–12 and 0.38 in. for NPS 14–24. Bolt lengths for ring type joint flanges include allowance of 0.62 in. for NPS 4–10, 0.75 in. for NPS 12-18, and 0.88 in. for NPS 20.
(5) Bore is to be specified by the purchaser.
(6) Ring joint flange in NPS 24 will require an angular meter tap as shown in Fig. 3.

Copyright ASME International
Provided by IHS under license with ASME
No reproduction or networking permitted without license from IHS

Not for Resale

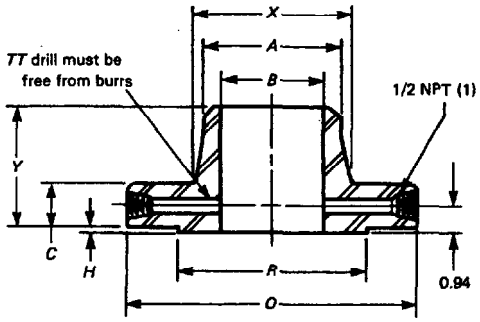

Raised Face

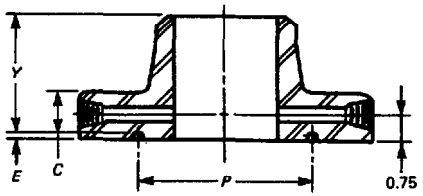

Ring Type Joint



Special One or Two Piece Ring and Orifice Plate Assembly

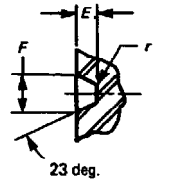

Groove Detail

TABLE 3 CLASS 600 ORIFICE FLANGES, WELDING NECK[2,3]

Nominal Pipe Size	Outside Diameter of Raised Face *R*	Outside Diameter of Flange *O*	Thickness of Flange, Min. *C*	Length Through Hub *Y*	Height of Raised Face *H*	Ring Type Joint						Diameter of Hub *X*	Hub Diameter Beginning of Chamfer *A*	Bore *B*	Diameter of Pressure Connection *TT*	Drilling Template				Diameter of Bolts	Length of Stud Bolts [(4)(5)]	
						Groove Number	Pitch Diameter *P*	Groove Depth *E*	Groove Width *F*	Radius at Bottom r_{max}	Special Oval Ring Height *W*					Bolt Circle	Number of Holes	Diameter of Holes				
																		Raised Face	Ring Joint		Raised Face	Ring Joint
1	2.00	4.88	1.44	3.19	0.06	R16	2.000	0.250	0.344	0.03	1.00	2.12	1.32	See Note (6).	1/4	3.50	4	0.69	0.75	5/8	5.00	5.50
1 1/2	2.88	6.12	1.44	3.32	0.06	R20	2.688	0.250	0.344	0.03	1.00	2.75	1.90		1/4	4.50	4	0.81	0.88	3/4	5.25	5.50
2	3.62	6.50	1.44	3.32	0.06	R23	3.250	0.312	0.469	0.03	1.06	3.31	2.38		1/4	5.00	8	0.69	0.75	5/8	5.00	5.50
2 1/2	4.12	7.50	1.44	3.44	0.06	R26	4.000	0.312	0.469	0.03	1.06	3.94	2.88		1/4	5.88	8	0.81	0.88	3/4	5.25	5.75
3	5.00	8.25	1.44	3.44	0.06	R31	4.875	0.312	0.469	0.03	1.06	4.62	3.50		3/8	6.62	8	0.81	0.88	3/4	5.25	5.75
4	6.19	10.75	1.50	4.00	0.25	R37	5.875	0.312	0.469	0.03	1.06	6.00	4.50		1/2	8.50	8	1.00	1.00	7/8	6.00	6.50
6	8.50	14.00	1.88	4.62	0.25	R45	8.312	0.312	0.469	0.03	1.06	8.75	6.63		1/2	11.50	12	1.12	1.12	1	7.00	7.50
8	10.62	16.50	2.19	5.25	0.25	R49	10.625	0.312	0.469	0.03	1.06	10.75	8.63		1/2	13.75	12	1.25	1.25	1 1/8	7.75	8.25
10	12.75	20.00	2.50	6.00	0.25	R53	12.750	0.312	0.469	0.03	1.06	13.50	10.75		1/2	17.00	16	1.38	1.38	1 1/4	8.75	9.25
12	15.00	22.00	2.62	6.12	0.25	R57	15.000	0.312	0.469	0.03	1.06	15.75	12.75		1/2	19.25	20	1.38	1.38	1 1/4	9.00	9.50
14	16.25	23.75	2.75	6.50	0.25	R61	16.500	0.312	0.469	0.03	1.06	17.00	14.00		1/2	20.75	20	1.50	1.50	1 3/8	9.50	10.00
16	18.50	27.00	3.00	7.00	0.25	R65	18.500	0.312	0.469	0.03	1.19	19.50	16.00		1/2	23.75	20	1.62	1.62	1 1/2	10.25	10.75
18	21.00	29.25	3.25	7.25	0.25	R69	21.000	0.312	0.469	0.03	1.19	21.50	18.00		1/2	25.75	20	1.75	1.75	1 5/8	11.00	11.50
20	23.00	32.00	3.50	7.50	0.25	R73	23.000	0.375	0.531	0.06	1.25	24.00	20.00		1/2	28.50	24	1.75	1.75	1 5/8	11.75	12.50
24	27.25	37.00	4.00	8.00	0.25	R77	27.250	0.438	0.656	0.06	1.44	28.25	24.00		1/2	33.00	24	2.00	2.00	1 7/8	13.25	13.75

Copyright ASME International
Provided by IHS under license with ASME
No reproduction or networking permitted without license from IHS
Not for Resale

GENERAL NOTE: Dimensions are in inches.

NOTES:
(1) Other NPT sizes may be furnished if required.
(2) Weldneck flanges NPS 3 and smaller are identical to Class 300 flanges except for bolting and may be used for such service.
(3) All other dimensions are in accordance with ASME B16.5.
(4) Bolt lengths for raised face flanges include allowance for orifice and gasket thickness of 0.25 in. for NPS 1–12 and 0.38 in. for NPS 14–24. Bolt lengths for ring type joint flanges include allowance of 0.62 in. for NPS 1–10, 0.75 in. for NPS 12–18, and 0.88 in. for NPS 20.
(5) In conformance with ASME B16.5, stud bolt lengths do not include point heights.
(6) Bore is to be specified by the purchaser.
(7) Ring joint flange in NPS 24 will require an angular meter tap as shown in Fig. 3.

Copyright ASME International
Provided by IHS under license with ASME
No reproduction or networking permitted without license from IHS

Not for Resale

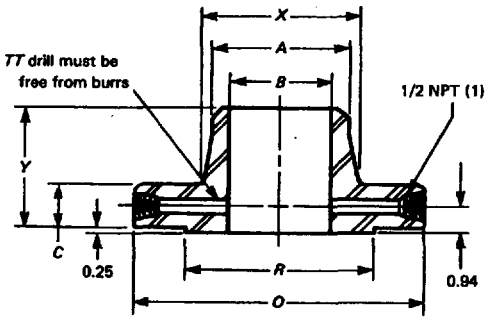

Raised Face

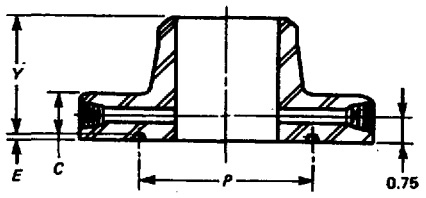

Ring Type Joint

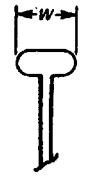

Special One or Two Piece Ring and Orifice Plate Assembly

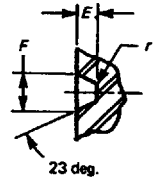

Groove Detail

TABLE 4 CLASS 900 ORIFICE FLANGES, WELDING NECK[2]

Nominal Pipe Size	Outside Diameter of Raised Face *R*	Outside Diameter of Flange *O*	Thickness of Flange, Min. *C*	Length Through Hub *Y*	Ring Type Joint (6)						Diameter of Hub *X*	Hub Diameter Beginning of Chamfer *A*	Bore *B*	Diameter of Pressure Connection *TT*	Drilling Template				Length of Stud Bolts [(3), (4)]	
					Groove Number	Pitch Diameter *P*	Groove Depth *E*	Groove Width *F*	Radius at Bottom r_{max}	Special Oval Ring Height *W*					Diameter of Bolt Circle	Number of Holes	Diameter of Holes	Diameter of Bolts	Raised Face	Ring Joint
1 1½ 2 2½	For NPS 2½ and smaller, use Class 1500.																			
3	5.00	9.50	1.50	4.00	R31	4.875	0.312	0.469	0.03	1.06	5.00	3.50	See Note (5).	⅜	7.50	8	1.00	⅞	6.00	6.50
4	6.19	11.50	1.75	4.50	R37	5.875	0.312	0.469	0.03	1.06	6.25	4.50		½	9.25	8	1.25	1⅛	7.00	7.50
6	8.50	15.00	2.19	5.50	R45	8.312	0.312	0.469	0.03	1.06	9.25	6.63		½	12.50	12	1.25	1⅛	7.75	8.25
8	10.62	18.50	2.50	6.38	R49	10.625	0.312	0.469	0.03	1.06	11.75	8.63		½	15.50	12	1.50	1⅜	9.00	9.50
10	12.75	21.50	2.75	7.25	R53	12.750	0.312	0.469	0.03	1.06	14.50	10.75		½	18.50	16	1.50	1⅜	9.50	10.00
12	15.00	24.00	3.12	7.88	R57	15.000	0.312	0.469	0.03	1.06	16.50	12.75		½	21.00	20	1.50	1⅜	10.25	10.75
14	16.25	25.25	3.38	8.38	R62	16.500	0.438	0.656	0.06	1.31	17.75	14.00		½	22.00	20	1.62	1½	11.00	11.50
16	18.50	27.75	3.50	8.50	R66	18.500	0.438	0.656	0.06	1.44	20.00	16.00		½	24.25	20	1.75	1⅝	11.50	12.00
18	21.00	31.00	4.00	9.00	R70	21.000	0.500	0.781	0.06	1.56	22.25	18.00		½	27.00	20	2.00	1⅞	13.00	13.75
20	23.00	33.75	4.25	9.75	R74	23.000	0.500	0.781	0.06	1.56	24.50	20.00		½	29.50	20	2.12	2	14.00	14.75
24	27.25	41.00	5.50	11.50	R78	27.250	0.625	1.062	0.09	1.88	29.50	24.00		½	35.50	20	2.62	2½	17.50	18.50

Copyright ASME International
Provided by IHS under license with ASME
No reproduction or networking permitted without license from IHS
Not for Resale

GENERAL NOTE: Dimensions are in inches.

NOTES:
(1) Other NPT sizes may be furnished if required.
(2) All other dimensions are in accordance with ASME B16.5.
(3) In conformance with ASME B16.5, stud bolt lengths do not include point heights.
(4) Bolt lengths for raised face flanges include allowance for orifice and gasket thickness of 0.25 in. for NPS 3–12 and 0.38 in. for NPS 14–24. Bolt lengths for ring type joint flanges include allowance of 0.62 in. for NPS 3–10 and 0.75 in. for NPS 12.
(5) Bore is to be specified by the purchaser.
(6) Ring joint flanges larger than NPS 12 will require angular meter taps as shown in Fig. 3.

Copyright ASME International
Provided by IHS under license with ASME
No reproduction or networking permitted without license from IHS

Not for Resale

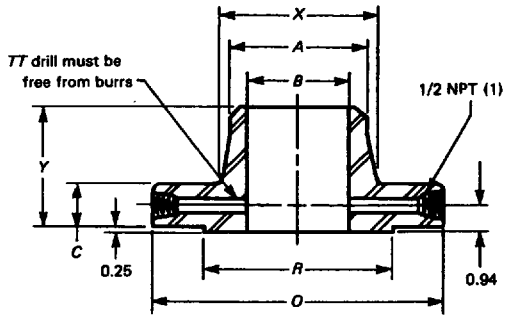

Raised Face

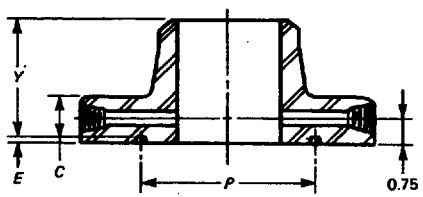

Ring Type Joint



Special One or Two Piece Ring and Orifice Plate Assembly

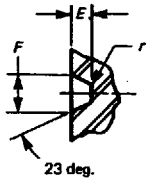

Groove Detail

TABLE 5 CLASS 1500 ORIFICE FLANGES, WELDING NECK[2]

Nominal Pipe Size	Outside Diameter of Raised Face *R*	Outside Diameter of Flange *O*	Thickness of Flange, Min. *C*	Length Through Hub *Y*	Ring Type Joint (6)						Diameter of Hub *X*	Hub Diameter Beginning of Chamfer *A*	Bore *B*	Diameter of Pressure Connection *TT*	Drilling Template				Length of Stud Bolts [(3), (4)]	
					Groove Number	Pitch Diameter *P*	Groove Depth *E*	Groove Width *F*	Radius at Bottom r_{max}	Special Oval Ring Height *W*					Diameter of Bolt Circle	Number of Holes	Diameter of Holes	Diameter of Bolts	Raised Face	Ring Joint
1	2.00	5.88	1.50	3.25	R16	2.000	0.250	0.344	0.03	1.00	2.06	1.32	See Note (5).	1/4	4.00	4	1.00	7/8	6.00	6.25
1 1/2	2.88	7.00	1.50	3.50	R20	2.688	0.250	0.344	0.03	1.00	2.75	1.90		1/4	4.88	4	1.12	1	6.25	6.50
2	3.62	8.50	1.50	4.00	R24	3.750	0.312	0.469	0.03	1.06	4.12	2.38		1/4	6.50	8	1.00	7/8	6.00	6.50
2 1/2	4.12	9.62	1.62	4.12	R27	4.250	0.312	0.469	0.03	1.06	4.88	2.88		1/4	7.50	8	1.12	1	6.50	7.00
3	5.00	10.50	1.88	4.62	R35	5.375	0.312	0.469	0.03	1.06	5.25	3.50		3/8	8.00	8	1.25	1 1/8	7.25	7.25
4	6.19	12.25	2.12	4.88	R39	6.375	0.312	0.469	0.03	1.06	6.38	4.50		1/2	9.50	8	1.38	1 1/4	8.00	8.50
6	8.50	15.50	3.25	6.75	R46	8.312	0.375	0.531	0.06	1.12	9.00	6.63		1/2	12.50	12	1.50	1 3/8	10.50	11.00
8	10.62	19.00	3.62	8.38	R50	10.625	0.438	0.656	0.06	1.31	11.50	8.63		1/2	15.50	12	1.75	1 5/8	11.75	12.25
10	12.75	23.00	4.25	10.00	R54	12.750	0.438	0.656	0.06	1.31	14.50	10.75		1/2	19.00	12	2.00	1 7/8	13.50	14.00
12	15.00	26.50	4.88	11.12	R58	15.000	0.562	0.806	0.06	1.56	17.75	12.75		1/2	22.50	16	2.12	2	15.00	15.75
14	16.25	29.50	5.25	11.75	R63	16.500	0.625	1.062	0.09	1.75	19.50	14.00		1/2	25.00	16	2.38	2 1/4	16.25	17.52
16	18.50	32.50	5.75	12.25	R67	18.500	0.688	1.188	0.09	2.00	21.75	16.00		1/2	27.75	16	2.62	2 1/2	17.75	19.00
18	21.00	36.00	6.38	12.88	R71	21.000	0.688	1.188	0.09	2.00	23.50	18.00		1/2	30.50	16	2.88	2 3/4	19.75	21.00
20	23.00	38.75	7.00	14.00	R75	23.000	0.688	1.312	0.09	2.12	25.25	20.00		1/2	32.75	16	3.12	3	21.50	22.50
24	27.25	46.00	8.00	16.00	R79	27.250	0.812	1.438	0.09	2.31	30.00	24.00		1/2	39.00	16	3.62	3 1/2	24.50	26.00

Copyright ASME International
Provided by IHS under license with ASME
No reproduction or networking permitted without license from IHS

Not for Resale

STD·ASME B16·36-ENGL 1996 ■ 0759670 0579312 5T9 ■

GENERAL NOTE: Dimensions are in inches.

NOTES:
(1) Other NPT sizes may be furnished if required.
(2) All other dimensions are in accordance with ASME B16.5.
(3) In conformance with ASME B16.5, stud bolt lengths do not include point heights.
(4) Bolt lengths for raised face flanges include allowance for orifice and gasket thickness of 0.25 in. for NPS 1–12 and 0.38 in. for NPS 14–24. Bolt lengths for *ring type joint flanges* include allowance of 0.62 in. for NPS 1–6.
(5) Bore is to be specified by the purchaser.
(6) *Ring joint flanges larger than* NPS 6 will require angular meter taps shown in Fig. 3.

Copyright ASME International
Provided by IHS under license with ASME
No reproduction or networking permitted without license from IHS
Not for Resale

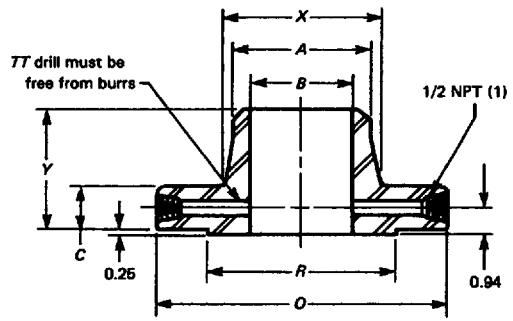

Raised Face

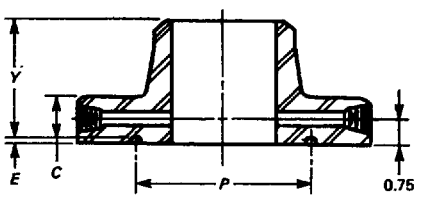

Ring Type Joint



Special One or Two Piece Ring and Orifice Plate Assembly

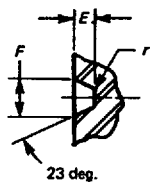

Groove Detail

TABLE 6 CLASS 2500 ORIFICE FLANGES, WELDING NECK[2]

Nominal Pipe Size	Outside Diameter of Raised Face *R*	Outside Diameter of Flange *O*	Thickness of Flange, Min. *C*	Length Through Hub *Y*	Ring Type Joint						Diameter of Hub *X*	Hub Diameter Beginning of Chamfer *A*	Bore *B*	Diameter of Pressure Connection *TT*	Drilling Template				Length of Stud Bolts [(3), (4)]	
					Groove Number	Pitch Diameter *P*	Groove Depth *E*	Groove Width *F*	Radius at Bottom r_{max}	Special Oval Ring Height *W*					Diameter of Bolt Circle	Number of Holes	Diameter of Holes	Diameter of Bolts	Raised Face	Ring Joint
1	2.00	6.25	1.50	3.62	R18	2.375	0.250	0.344	0.03	1.00	2.25	1.32	See Note (5).	1/4	4.25	4	1.00	7/8	6.00	6.25
1 1/2	2.88	8.00	1.75	4.38	R23	3.250	0.312	0.469	0.03	1.06	3.12	1.90		1/4	5.75	4	1.25	1 1/8	7.00	7.50
2	3.62	9.25	2.00	5.00	R26	4.000	0.312	0.469	0.03	1.06	3.75	2.38		1/4	6.75	8	1.12	1	7.25	7.75
2 1/2	4.12	10.50	2.25	5.62	R28	4.375	0.375	0.531	0.06	1.19	4.50	2.88		1/4	7.75	8	1.25	1 1/8	8.00	8.50
3	5.00	12.00	2.62	6.62	R32	5.000	0.375	0.531	0.06	1.19	5.25	3.50		3/8	9.00	8	1.38	1 1/4	9.00	9.50
4	6.19	14.00	3.00	7.50	R38	6.188	0.438	0.656	0.06	1.31	6.50	4.50		1/2	10.75	8	1.62	1 1/2	10.25	10.75
6	8.50	19.00	4.25	10.75	R47	9.000	0.500	0.781	0.06	1.44	9.25	6.63		1/2	14.50	8	2.12	2	13.75	14.50
8	10.62	21.75	5.00	12.50	R51	11.000	0.562	0.906	0.06	1.56	12.00	8.63		1/2	17.25	12	2.12	2	15.25	16.00
10	12.75	26.50	6.50	16.50	R55	13.500	0.688	1.188	0.09	1.88	14.75	10.75		1/2	21.25	12	2.62	2 1/2	19.25	20.25
12	15.00	30.00	7.25	18.25	R60	16.000	0.688	1.312	0.09	2.00	17.38	12.75		1/2	24.38	12	2.88	2 3/4	21.25	22.50

GENERAL NOTE: Dimensions are in inches.

NOTES:
(1) Other NPT sizes may be furnished if required.
(2) All other dimensions are in accordance with ASME B16.5.
(3) In conformance with ASME B16.5, stud bolt lengths do not include point heights.
(4) Bolt lengths for raised face flanges include allowance for orifice and gasket thickness of 0.25 in. for NPS 1–12. Bolt lengths for ring type joint flanges include allowance of 0.62 in. for NPS 1–3.
(5) Bore is to be specified by the purchaser.
(6) Ring joint flanges larger than NPS 3 will require angular meter taps as shown in Fig. 3.

Copyright ASME International
Provided by IHS under license with ASME
No reproduction or networking permitted without license from IHS
Not for Resale

ANNEX A
QUALITY SYSTEM PROGRAM

(This Annex is not part of ASME B16.36-1996 and is included for information only.)

The products manufactured in accordance with this Standard shall be produced under a quality system program following the principles of an appropriate standard from the ISO 9000 series.[1] A determination of the need for registration and/or certification of the product manufacturer's quality system program by an independent organization shall be the responsibility of the manufacturer. The detailed documentation demonstrating program compliance shall be available to the puchaser at the manufacturer's facility. A written summary description of the program utilized by the product manufacturer shall be available to the purchaser upon request. The product manufacturer is defined as the entity whose name or trademark appears on the product in accordance with the marking or identification requirements of this Standard.

[1] The series is also available from the American National Standards Institute (ANSI) and the American Society for Quality Control (ASQC) as American National Standards that are identified by a prefix "Q" replacing the prefix "ISO". Each standard of the series is listed under Annex B.

Copyright ASME International
Provided by IHS under license with ASME
No reproduction or networking permitted without license from IHS
Not for Resale

ANNEX B
REFERENCES

(This Annex is an integral part of ASME B16.36-1996 and is placed after the main text for convenience.)

The following is a list of standards and specifications referenced in this Standard showing the year of approval.

ASME Publications (Approved as American National Standards)

ASME B1.20.1-1983 (R1992)	Pipe Threads, General Purpose (Inch)
ASME B16.5-1996	Pipe Flanges and Flanged Fittings
ASME B16.11-1991	Forged Fittings, Socket-Welding and Threaded

ASME Boiler and Pressure Vessel Code, 1995 Edition (Including Addenda through 1995)

Section 1	Power Boilers
Section II	Materials
Section III	Nuclear Power Plant Components
Section VIII, Division 1 & 2	Pressure Vessels

International Standards Organization (ISO)

ISO 9000-1: 1994	Quality management and quality assurance standards - Part 1: Guidelines for selection and use
ISO 9000-2: 1993	Quality management and quality assurance standard - Part 2: Generic guidelines for the application of ISO 9001, ISO 9002, and ISO 9003
ISO 9000-3: 1991	Quality management and quality assurance standards - Part 3: Guidelines for the application of ISO 9001 to the development, supply and maintenance of software
ISO 9001: 1994	Quality systems - Model for quality assurance in design, development, production, istallation, and servicing
ISO 9002: 1994	Quality systems - Model for quality assurance in production and servicing
ISO 9003: 1994	Quality systems - Model for quality assurance in final inspection and test

Copyright ASME International
Provided by IHS under license with ASME
No reproduction or networking permitted without license from IHS Not for Resale

Publications of the following organizations appear in the above list:

ASME	The American Society of Mechanical Engineers 345 East 47th Street, New York, NY 10017-2392
	ASME Order Department 22 Law Drive, Box 2300, Fairfield, NJ 07007-2300
ASQC	American Society for Quality Control P.O. Box 3005, Milwaukee, WI 53201-3005
ISO	International Organization for Standardization 1, rue de Varembé, Case postale 56, CH - 1121 Genéve 20, Switzerland/Suisse

ISO documents are also available from ANSI. Publications appearing above which have been approved as American National Standards may also be obtained from ANSI.

ANSI	American National Standards Institute, Inc. 11 West 42nd St., New York, NY 10036

Copyright ASME International
Provided by IHS under license with ASME
No reproduction or networking permitted without license from IHS Not for Resale