ASME B16.33-2002
(Revision of ASME B16.33-1990)

MANUALLY OPERATED METALLIC GAS VALVES FOR USE IN GAS PIPING SYSTEMS UP TO 125 PSI

(SIZES NPS 1/2 THROUGH NPS 2)

AN AMERICAN NATIONAL STANDARD

The American Society of Mechanical Engineers

Copyright ASME International
Provided by IHS under license with ASME
No reproduction or networking permitted without license from IHS

Not for Resale

The American Society of Mechanical Engineers

AN AMERICAN NATIONAL STANDARD

MANUALLY OPERATED METALLIC GAS VALVES FOR USE IN GAS PIPING SYSTEMS UP TO 125 PSI

(SIZES NPS 1/2 THROUGH NPS 2)

ASME B16.33-2002
(Revision of ASME B16.33-1990)

Copyright ASME International
Provided by IHS under license with ASME
No reproduction or networking permitted without license from IHS
Not for Resale

Date of Issuance: July 30, 2002

The next edition of this Standard is scheduled for publication in 2007. There will be no addenda or written interpretations of the requirements of this Standard issued to this edition.

ASME is the registered trademark of The American Society of Mechanical Engineers.

This code or standard was developed under procedures accredited as meeting the criteria for American National Standards. The Standards Committee that approved the code or standard was balanced to assure that individuals from competent and concerned interests have had an opportunity to participate. The proposed code or standard was made available for public review and comment that provides an opportunity for additional public input from industry, academia, regulatory agencies, and the public-at-large.

ASME does not "approve," "rate," or "endorse" any item, construction, proprietary device, or activity.

ASME does not take any position with respect to the validity of any patent rights asserted in connection with any items mentioned in this document, and does not undertake to insure anyone utilizing a standard against liability for infringement of any applicable letters patent, nor assumes any such liability. Users of a code or standard are expressly advised that determination of the validity of any such patent rights, and the risk of infringement of such rights, is entirely their own responsibility.

Participation by federal agency representative(s) or person(s) affiliated with industry is not to be interpreted as government or industry endorsement of this code or standard.

ASME accepts responsibility for only those interpretations of this document issued in accordance with the established ASME procedures and policies, which precludes the issuance of interpretations by individuals.

No part of this document may be reproduced in any form,
in an electronic retrieval system or otherwise,
without the prior written permission of the publisher.

The American Society of Mechanical Engineers
Three Park Avenue, New York, NY 10016-5990

Copyright © 2002 by
THE AMERICAN SOCIETY OF MECHANICAL ENGINEERS
All Rights Reserved
Printed in U.S.A.

Copyright ASME International
Provided by IHS under license with ASME
No reproduction or networking permitted without license from IHS
Not for Resale

CONTENTS

Foreword iv
Committee Roster vi
Correspondence with the B16 Committee vii

1 Scope 1
1.1 General 1
1.2 Design 1
1.3 Standards and Specifications 1
1.4 Quality Systems 1
1.5 Convention 1
1.6 Codes and Regulations 1

2 Construction 1
2.1 General 1
2.2 Tamper-Proof Features 1
2.3 Configuration 2
2.4 Marking 2
2.5 Lubrication (Sealant) 2

3 Materials 2
3.1 Metallic Materials for Valve Parts 2
3.2 Lubricants, Sealants, and Seating Materials 2

4 Design Qualification 3
4.1 General 3
4.2 Gas Tightness 3
4.3 Temperature Resistance 3
4.4 Structural Provision 4
4.5 Flow Capacity 5

5 Production Testing 5

Figure
1 Test Assembly 4

Tables
1 Materials for Metallic Valve Parts 2
2 Torque Values 4
3 Bending Moment Values 4
4 Tensile Load Values 5
5 Maximum Turning Torque Values 5
6 Minimum Gas Flows 5

Annexes
A References 6
B Quality System Program 8

--`,,`-`-`,,`,,`,`,,`---

Copyright ASME International
Provided by IHS under license with ASME
No reproduction or networking permitted without license from IHS
Not for Resale

FOREWORD

The B16 Standards Committee was organized in the Spring of 1920 and held its organizational meeting on November 21 of that year. The group operated as a Sectional Committee (later redesignated as a Standards Committee) under the authorization of the American Engineering Standards Committee (subsequently named American Standards Association, United States of America Standards Institute, and now, American National Standards Institute). Sponsors for the group were The American Society of Mechanical Engineers, Manufacturers Standardization Society of the Valve & Fittings Industry, and the Heating and Piping Contractors National Association (later the Mechanical Contractors Association of America).

The American Gas Association determined that standardization of gas shut-off valves used in distribution services was desirable and needed. The AGA Task Committee on Standards for Valves and Shut-Offs was formed, and development work commenced in 1958. In 1968, it was determined that a more acceptable document would result if approval were gained from the American National Standards Institute and to facilitate such action, the AGA Committee became Subcommittee No. 13 of the B16 activity.

This Standard offers more performance requirements than has been customary in B16 standards. It is expected that this will permit both manufacturers and users greater latitude in producing and using products made to this Standard.

Work was agonizingly slow as the group gradually developed the document in the desired format. Its efforts were successful when, on July 18, 1973, final approval was granted by the institute.

The revision incorporated some major revisions to the format. In addition, the scope of the standard was clarified so that the standard could be applicable to all manually operated metallic gas valves for use in gas piping standards up to 125 psig. The revised standard incorporated testing criteria for valves, which could have a specific pressure rating within this pressure range. This revision was made to clarify the fact that the standard is also applicable to valves with service designations other than 60 psig and 125 psig. The revision was approved on February 10, 1981.

The 1990 revision deleted the sampling inspection table on the basis that the scope clearly limited the standard to turning torque valves at the time of manufacture. This edition established U.S. customary units as the standard and metric equivalents were deleted.

In 1982, American National Standards Committee B16 was recognized as an ASME Committee operating under procedures accredited by ANSI.

In 2002, a new materials section was added along with several other revisions. Also incorporated were metric values and a nonmandatory Quality System Program Annex. Use of these valves in higher rated systems is outside the scope of this Standard, and is neither permitted nor prohibited.

Copyright ASME International
Provided by IHS under license with ASME
No reproduction or networking permitted without license from IHS
Not for Resale

Following approval by the ASME B16 Standards Committee, this revision to the 1990 edition of this Standard was approved as an American National Standard by ANSI on May 16, 2002.

All requests for interpretations or suggestions for revisions should be sent to the Secretary, B16 Committee, The American Society of Mechanical Engineers, Three Park Avenue, New York, N.Y. 10016-5990.

--`-`-`-,,`,,`,`,,`---

Copyright ASME International
Provided by IHS under license with ASME
No reproduction or networking permitted without license from IHS

Not for Resale

ASME B16 COMMITTEE
Standardization of Valves, Flanges, Fittings, Gaskets, and Valve Actuators

(The following is the roster of the Committee at the time of approval of this Standard.)

OFFICERS

H. R. Sonderegger, *Chair*
M. L. Nayyar, *Vice Chair*
P. A. Reddington, *Secretary*

COMMITTEE PERSONNEL

R. W. Barnes, Anric Enterprises
R. R. Brodin, Fisher Controls International, Inc.
M. A. Clark, Nibco, Inc.
A. Cohen, A. Cohen and Associates
C. E. Floren, Mueller Co.
D. R. Frikken, Solutia, Inc.
G. A. Jolly, Vogt Valve Co.
W. G. Knecht, BW/IP International, Inc.
R. Koester, The William Powell Co.
W. N. McLean, Newco Valves
M. L. Nayyar, Bechtel Power Corp.
P. A. Reddington, The American Society of Mechanical Engineers
R. A. Schmidt, Trinity-Ladish Co.
H. R. Sonderegger, Grinnell Corp.
W. M. Stephan, Flexitallic, Inc.
T. F. Stroud, Ductile Iron Pipe Research Association
R. E. White, Richard E. White and Associates
D. A. Williams, Southern Company Services
L. A. Willis, The Dow Chemical Co.
W. R. Worley, Union Carbide Corp.

SUBCOMMITTEE L — GAS SHUTOFFS AND VALVES

C. A. Floren, *Chair,* Muller Co.
F. R. Volgstadt, *Vice Chair,* TPS Consulting, Inc.
R. W. Conley, Kerotest Manufacturing Corp.
J. D. Eckel, A Y McDonald
D. S. Glover, Brass Craft Manufacturing
C. A. Hamilton, ABS America
A. J. Hejl, NIBCO, Inc.
G. E. Moino, The American Society of Mechanical Engineers
T. Perrera, Csa International
A. M. Pietramale, Pietramale and Associates
T. J. Pitzl, Tennessee Valley Authority
C. R. Stevens, National Meter Co.
D. P. Zapalac, Rw Lyall & Co, Inc.

Copyright ASME International
Provided by IHS under license with ASME
No reproduction or networking permitted without license from IHS
Not for Resale

CORRESPONDENCE WITH THE B16 COMMITTEE

General. ASME Standards are developed and maintained with the intent to represent the consensus of concerned interests. As such, users of this Standard may interact with the Committee by requesting interpretations, proposing revisions, and attending Committee meetings. Correspondence should be addressed to:

Secretary, B16 Main Committee
The American Society of Mechanical Engineers
Three Park Avenue
New York, NY 10016-5990

Proposing Revisions. Revisions are made periodically to the Standard to incorporate changes that appear necessary or desirable, as demonstrated by the experience gained from the application of the Standard. Approved revisions will be published periodically.

The Committee welcomes proposals for revisions to this Standard. Such proposals should be as specific as possible, citing the paragraph number(s), the proposed wording, and a detailed description of the reasons for the proposal, including any pertinent documentation.

Interpretations. Upon request, the B16 Committee will render an interpretation of any requirement of the Standard. Interpretations can only be rendered in response to a written request sent to the Secretary of the B16 Main Committee.

The request for interpretation should be clear and unambiguous. It is further recommended that the inquirer submit his/her request in the following format:

Subject: Cite the applicable paragraph number(s) and the topic of the inquiry.

Edition: Cite the applicable edition of the Standard for which the interpretation is being requested.

Question: Phrase the question as a request for an interpretation of a specific requirement suitable for general understanding and use, not as a request for an approval of a proprietary design or situation. The inquirer may also include any plans or drawings, which are necessary to explain the question; however, they should not contain proprietary names or information.

Requests that are not in this format will be rewritten in this format by the Committee prior to being answered, which may inadvertently change the intent of the original request.

ASME procedures provide for reconsideration of any interpretation when or if additional information that might affect an interpretation is available. Further, persons aggrieved by an interpretation may appeal to the cognizant ASME Committee or Subcommittee. ASME does not "approve," "certify," "rate," or "endorse" any item, construction, proprietary device, or activity.

Attending Committee Meetings. The B16 Main Committee regularly holds meetings, which are open to the public. Persons wishing to attend any meeting should contact the Secretary of the B16 Main Committee.

Copyright ASME International
Provided by IHS under license with ASME
No reproduction or networking permitted without license from IHS
Not for Resale

--`,`-`-`,,`,,`,`,,`---

Copyright ASME International
Provided by IHS under license with ASME
No reproduction or networking permitted without license from IHS

Not for Resale

MANUALLY OPERATED METALLIC GAS VALVES FOR USE IN GAS PIPING SYSTEMS UP TO 125 PSI (SIZES NPS 1/2 THROUGH NPS 2)

1 SCOPE

1.1 General

This Standard covers requirements for manually operated metallic valves sizes NPS ½ through NPS 2, for outdoor installation as gas shut-off valves at the end of the gas service line and before the gas regulator and meter where the designated gauge pressure of the gas piping system does not exceed 125 psi (8.6 bar). The Standard applies to valves operated in a temperature environment between −20°F and 150°F (−29°C and 66°C).

1.2 Design

This Standard sets forth the minimum capabilities, characteristics, and properties, which a valve at the time of manufacture must possess, in order to be considered suitable for use in gas piping systems. Details of design and manufacture (other than those stated in this Standard, including such design and production tests that will produce a valve that will have the required capabilities to meet this Standard) remain the responsibility of the manufacturer.

1.3 Standards and Specifications

Standards and specifications adopted by reference in this Standard and the names and addresses of the sponsoring organizations are shown in Nonmandatory Annex A. It is not considered practical to refer to a specific edition of each of the standards and specifications in the individual references. Instead the specific edition references are included in Nonmandatory Annex A. A product made in conformance with a prior edition of reference standards and in all other aspects conforming to this Standard will be considered to be in conformance even though the edition reference may be changed in a subsequent revision of this Standard.

1.4 Quality Systems

Nonmandatory requirements relating to the manufacturer's Quality System Program are described in Nonmandatory Annex B.

1.5 Convention

For the purpose of determining conformance with this Standard, the convention for fixing significant digits where limits, maximum or minimum values, are specified shall be "rounding off" as defined in ASTM Practice E 29. This requires that an observed or calculated value shall be rounded off to the nearest unit in the last right-hand digit used for expressing the limit. Decimal values and tolerances do not imply a particular method of measurement.

1.6 Codes and Regulations

A valve used under the jurisdiction of the Code of Federal Regulation (CFR) such as Title 49 Part 192, the ASME Code for Pressure Piping such as ASME B31.8, or the National Fuel Gas Code, Z223.1, is subject to any limitation of that code or regulation.

2 CONSTRUCTION

2.1 General

Each valve at the time of manufacture shall be capable of meeting the requirements set forth in this Standard. The workmanship employed in the manufacture and assembly of each valve shall provide gas tightness, safety, and reliability of performance and freedom from injurious imperfections and defects.

2.2 Tamper-Proof Features

Where valves are specified to be tamper-proof, they shall be designed and constructed to minimize the possibility of the removal of the core of the valve with other than specialized tools.

Copyright ASME International
Provided by IHS under license with ASME
No reproduction or networking permitted without license from IHS
Not for Resale

2.3 Configuration

2.3.1 Operating Indication. The valve shall be so marked or constructed that the operator can visually determine:

(a) when a $^1/_4$ turn valve is in the open or closed position (if flat head, longitudinal axis of the head shall be perpendicular to the longitudinal axis of the valve when valve is in the closed position);

(b) when the valve requires more than $^1/_4$ turn to operate valve, turning direction to open or close the valve.

2.3.2 Valve End. Valve ends shall comply with the following standards where applicable:

(a) ASME B1.20.1 Pipe Threads;

(b) ASME B16.1 Cast Iron Flanges and Flanged Fittings; and

(c) ASME B16.5 Steel Pipe Flanges and Flanged Fittings.

2.4 Marking

2.4.1 General. Except as may be modified herein, valves shall be marked as required in MSS SP-25 and shall include the following requirements.

2.4.1.1 Name. The manufacturer's name or trademark and, where space permits, the designation "B16.33". The B16.33 mark is the manufacturer's acknowledgement that the valve was manufactured in conformance with ASME B16.33.

2.4.1.2 Pressure Rating. Marking for pressure ratings such as 60G, 125G, etc., may be shown on the head, stem, or body.

2.4.1.3 Tamper-Proof. The designation "T" for tamper-proof construction where tamper-proof features are not easily identifiable without disassembling the valve. This designation may be shown on the head or stem.

2.5 Lubrication (Sealant)

Valves which require pressure lubrication (by the injection of lubricant through fittings to the sealing surface of the valve) shall be capable of being lubricated while subjected to the pressure rating. Compliance with this provision can be met if lubrication can be accomplished with the valve in both the fully opened and fully closed positions. The design must be such as to minimize entry of lubricant into the gasway when lubricated in accordance with the manufacturer's instruction.

TABLE 1
MATERIALS FOR METALLIC VALVE PARTS

Cast Iron	ASTM A	126	Class B
	ASTM A	48	Class 30
Malleable Iron	ASTM A	47	
	ASTM A	197	
Ductile Iron	ASTM A	395	
	ASTM A	536	Grade 60-40-18 or Grade 65-45-12
Steel	ASTM A	108	
	ASTM A	505	
	ASTM A	589	
Cast Bronze	ASTM B	62	
Cast Brass	ASTM B	584	Alloy UNS C83600 Alloy UNS C84400
Forged Brass	ASTM B	283	Alloy UNS C37700
Rod Brass	ASTM B	16	Alloy UNS C36000
Sintered Brass	ASTM B	282	
	MPIF Std	35	Code CZP 3002 or CZP 2002

3 MATERIALS

3.1 Metallic Materials for Valve Parts

Metallic materials known to be acceptable for compliance with this Standard are listed in Table 1. Other metallic materials may be used when the product incorporating them meets the requirements of this Standard.

3.2 Lubricants, Sealants, and Seating Materials

3.2.1 Lubricants and Sealants. Lubricants and/or sealants shall be resistant to the action of fuel gases such as natural, manufactured, and LP gases. The valve manufacturer is responsible for the selection of lubricants and sealants, and for the determination of their suitability for the service conditions specified in the scope of this Standard.

3.2.2 Seating and Stem Seal Materials. The valve manufacturer is responsible for selection of seating and stem seal materials and for determination of their suitability for the service conditions specified in the scope of this Standard.

3.2.3 Elastomer Components

3.2.3.1 Air Aging Tests. Elastomer parts that are exposed to fuel gas shall be made from materials that, following 70 hr air aging in accordance with ASTM D 573 at 212°F (100°C), meet elongation, tensile, and hardness property requirements a follows: Tensile tests shall be conducted on six dumbbells in accordance with ASTM D 412. Three dumbbells shall

Copyright ASME International
Provided by IHS under license with ASME
No reproduction or networking permitted without license from IHS
Not for Resale

be air aged 70 hr in accordance with ASTM D 573 at 212°F (100°C). The dumbbells shall have a thickness of 0.080 + 0.008 in. (2.0 ± 0.2 mm). The average of the three individual tests for the aged dumbbells shall exceed 60% retention of ultimate elongation and 60% retention of tensile strength at break. The average of the three individual tests for the non-aged dumbbells shall be the basis for % retention calculation. Hardness tests shall be conducted using specimens in accordance with ASTM D 395, Type 2. Three specimens shall be air aged 70 hr in accordance with ASTM D 573 at 212°F (100°C). The average of the three individual tests for the aged specimens shall not show a hardness change of more than ±10 shore hardness points relative to the average hardness of the non-aged specimens.

3.2.3.2 Swell Tests. Elastomer parts, which are exposed to fuel gas, shall be made from materials that, after 70 hr exposure in n-hexane at 74°F (23°C), in accordance with ASTM D 471, meet the volume change, elongation, and tensile property requirements as follows:

Volume change test shall be conducted using six specimen in accordance with ASTM D 471, Section 8. Three specimen shall be exposed for 70 hr at 74°F (23°C) in n-hexane in accordance with ASTM D 471. The average of the three individual n-hexane tests shall not show an increase in volume of more than 25% or a decrease in volume of more than 1%. The average of the three tests for the non-aged specimen shall be the basis for the % retention change calculation.

Tensile tests shall be conducted on six dumbbells in accordance with ASTM D 412. Three of the tensile tests shall be conducted on dumbbells exposed in n-hexane at 74°F (23°C) for 70 hr in accordance with ASTM D 471. The dumbbells shall have a thickness of 0.080 + 0.008 in. (2.0 ± 0.2 mm). The average of the three individual n-hexane tests shall exceed 60% retention of ultimate elongation and 60% retention of tensile strength at break. The average of the three tests for the non-aged specimen shall be the basis for the % volume change calculation.

3.2.3.3 Compression Set Tests. Elastomer parts, which may be exposed to fuel gas, shall be made from materials having a compression set of no more than 25% after 22 hr at 212°F (100°C), in accordance with ASTM D 395, Method b, using standard test specimen in accordance with ASTM D 395 (See para. 5.2).

3.2.4 PTFE Components. Polytetrafluoroethylene (PTFE) materials shall comply with ASTM D 4894 or ASTM D 4895.

4 DESIGN QUALIFICATION

4.1 General

4.1.1 Each basic valve design shall be qualified and demonstrated as suitable for the service by testing randomly selected production valves of each size, type and pressure shell material according to the design qualification tests.

4.1.2 All tests, unless otherwise specified, shall be conducted at a temperature of 74°F ± 15°F (23°C ± 8°C).

4.1.3 Before each test is conducted, the valve shall be in the condition in which it would be placed in service.

4.2 Gas Tightness

4.2.1 The valve shall provide a shut-off when in the closed position and shall not leak to the atmosphere in the open or closed position when subjected progressively to internal air pressure of first 4 ± 2 psi (0.3 + 0.1 bar) and then to at least 1.5 times the pressure rating of the valve.

4.2.2 Method of Test for Gas Tightness. With the valve in the open position and the outlet plugged, the test pressure shall be applied to the inlet of the valve. The valve shall be immersed in a bath containing water at a temperature of 74°F ± 15°F (23°C ± 8°C) for a period of 15 seconds. Leakage, as evidenced by flow (breaking away) of bubbles shall not be permitted. The valve shall then be turned to the closed position, outlet opened and the test repeated.

4.2.3 Other means of leak detection may be used provided they can be shown to be equivalent in leak detection sensitivity.

4.3 Temperature Resistance

4.3.1 A valve should be operable at temperatures ranging from −20°F to 150°F (−29°C to 66°C) without affecting the capability of the valve to control the flow of gas.

4.3.2 The valve shall be maintained at a temperature of −20°F (−29°C) for a period long enough to allow all parts to come to equilibrium temperature. With the valve subjected to an internal air pressure at least equal to the pressure rating and with the outlet end of the valve arranged to vent to atmosphere, it shall be determined that it can be opened and closed.

Copyright ASME International
Provided by IHS under license with ASME
No reproduction or networking permitted without license from IHS Not for Resale

TABLE 2
TORQUE VALUES

Nominal Valve Size [Note (1)]	Torque	
	(lb_f - in.)	(N - m)
1/2	800	90
3/4	1000	113
1	1200	136
1 1/4	1450	164
1 1/2	1550	175
2	1650	186

NOTE:
(1) For valves having a different size inlet and outlet, the smaller size shall determine the torque value.

4.3.3 The valve shall then be maintained at a temperature of 150°F (66°C) for a period long enough to allow all parts to come to equilibrium temperature. With the valve subjected to an internal air pressure at least equal to the pressure rating, it shall be determined that it can be opened and closed.

4.3.4 The valve shall then be allowed to return to a temperature of 74°F ± 15°F (23°C ± 8°C) and satisfactorily pass the test outlined in para. 4.2.

4.4 Structural Provision

4.4.1 General. Each test in which damage to the valve could result (i.e., Tests 4.3, 4.4.2, 4.4.3, 4.4.4, and 4.4.5) shall be conducted on new unused samples of the valve.

4.4.2 Strength. A valve in the open position with the outlet plugged shall withstand an internal hydrostatic pressure of 425 psi (29 bar) for a period of one minute without rupture or permanent deformation that would, after release of the pressure, render the valve inoperable.

TABLE 3
BENDING MOMENT VALUES

Nominal Valve Size [Note (1)]	Test			
	Bending		Load	
	(lb_f - in.)	(N - m)	(lb_f)	(N)
1/2	1,800	203	600	2,670
3/4	3,200	362	1,060	4,720
1	6,000	678	2,000	8,900
1 1/4	10,600	1 200	3,530	15,700
1 1/2	14,500	1 640	4,830	21,500
2	25,200	2 850	8,400	37,400

NOTE:
(1) For valves having a different size inlet and outlet, the smaller size shall determine the bending Moment and Load values.

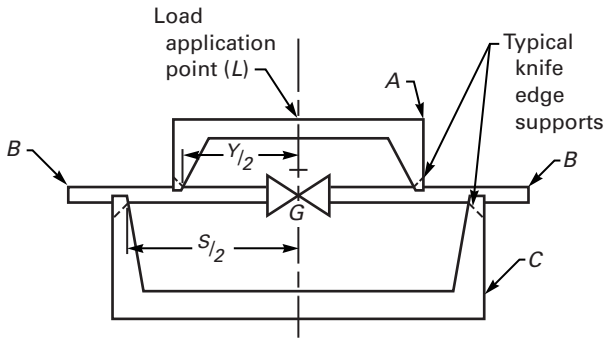

where:

A = load application yoke

B = solid steel bars machined to the nominal iron pipe size diameter of the valve ends and firmly connected to the valve ends as a test assembly. [When threaded end valve used, the bars shall be threaded with American Standard Taper Pipe Threads (NPT) as described in ASME B1.20.1 coated with thread lubricant and tightened to 50% of the values specified in 4.4.2 Table 2]

C = resistance yoke

G = gas valve

L = load:

S = 24 in. (610 mm) span between points for load resistance

Y = 12 in. (305 mm) span between points of load application

Equation to determine the bending moment

$$M_b = \frac{L\,(S - Y)}{4}$$

FIG. 1 TEST ASSEMBLY

4.4.3 Twist. The valve body, when tested in both the open and closed position, shall withstand the torque specified in Table 2 applied directly to the ends of the valve, without rupture or permanent deformation that would, after release of the torque, render the valve inoperable, incapable of providing a shut-off, or cause it to leak to atmosphere when tested as outlined in para. 4.2.

4.4.4 Bending. A valve in both the open and closed positions shall withstand the bending moment specified in Table 3 when applied as indicated in Fig. 1, without rupture. After the bending stress is relieved, there shall be no permanent deformation that would render the valve inoperable, incapable of providing a shut-off, or

Copyright ASME International
Provided by IHS under license with ASME
No reproduction or networking permitted without license from IHS
Not for Resale

TABLE 4
TENSILE LOAD VALUES

Nominal Valve Size [Note (1)]	Load (L)	
	(lb_f)	(N)
1/2	4,000	18,000
3/4	6,000	27,000
1	8,000	36,000
1 1/4	8,000	36,000
1 1/2	8,000	36,000
2	10,000	44,000

NOTE:
(1) For valves having a different size inlet and outlet, the smaller size shall determine the Tensile Load values.

cause it to leak to atmosphere when tested as outlined in para. 4.2.

4.4.5 Tensile Strength. A valve in both the open and closed positions shall withstand the tensile load specified in Table 4, when applied gradually to valve ends, without rupture or permanent deformation that would, after release of the tensile load, render the valve inoperable, incapable of providing a shut-off, or cause it to leak to atmosphere when tested as outlined in para. 4.2. Schedule 80 steel pipe shall be connected to the valve for the purpose of transmitting the tensile load.

4.4.6 Turning Torque. The torque required to continue to operate the valve after breaking loose from its set or stationary position shall not exceed the amounts specified in Table 5. All valves at the end of this test shall be capable of complying with the provisions of para. 4.2.

4.5 Flow Capacity

The valves, when in the full open position, shall meet the minimum gas flow as specified in Table 6. A valve of each size and type shall be tested to verify that the pressure loss is not greater than that specified in Table 6. The test shall be conducted using a technically recognized procedure such as that contained in ISA S75.02. The test fluid and type of test facility and instrumentation are at the discretion of the manufacturer and shall be fully described in their test records.

TABLE 5
MAXIMUM TURNING TORQUE VALUES

Nominal Valve Size [Note (2)]	Maximum Turning Torque [Note (1)]	
	(lb_f - in.)	(N - m)
1/2	200	23
3/4	240	27
1	320	36
1 1/4	500	56
1 1/2	700	79
2	1,200	136

NOTES:
(1) Measured at a temperature of 74°F ± 15°F (23°C ± 8°C).
(2) For valves having a different size inlet and outlet, the smaller size shall determine the Maximum Turning Torque values.

TABLE 6
MINIMUM GAS FLOW

Nominal Valve Size [Note (1)]	Minimum Gas Flow at Reference Conditions [Note (2)]	
	(ft^3/h)	(m^3/h)
1/2	190	5.4
3/4	290	8.2
1	600	17.0
1 1/4	1,200	34.0
1 1/2	1,500	42.5
2	2,400	68.0

NOTES:
(1) For valves having a different size inlet and outlet, the smaller size shall determine the Minimum Gas Flow.
(2) Minimum gas flow in standard cubic feet per hour (cubic meters per hour) with the valve in the fully open position at an inlet pressure of 0.5 psi (0.035 bar), 70°F (21°C), 0.64 specific gravity, and 0.3 in. (7.6 mm) water column net valve pressure drop, assuming the valve is on schedule 40 pipe.

5 PRODUCTION TESTING

Each valve shall be tested at the time of manufacture at a pressure of at least 1.5 times the pressure rating marked on the valve, according to the method of test for gas tightness in para. 4.2.

Copyright ASME International
Provided by IHS under license with ASME
No reproduction or networking permitted without license from IHS
Not for Resale

NONMANDATORY ANNEX A
REFERENCES

The following is a list of standards and specifications referenced in this Standard showing the year of approval.

ASME B1.20.1-1983 (R 1992) Pipe Threads, General Purpose (Inch)

ASME B16.1-1998 Cast Iron Pipe Flanges and Flanged Fittings, Class 25, 125, 250, and 800

ASME B16.5-1996 Pipe Flanges and Flanged Fittings, Class 150, 300, 400, 600, 900, 1500, and 2500

ASME B31.8-1999 Gas Transmission and Distribution Piping Systems

Publisher: The American Society of Mechanical Engineers (ASME), Three Park Ave., New York, NY 10016-5990; Order Department: 22 Law Drive, Box 2300, Fairfield, NJ 07007-2300

ASTM A 47-99 Standard Specification for Ferritic Malleable Iron Castings

ASTM A 48-00 Standard Specification for Gray Iron Castings [Metric]

ASTM A 108-99 Standard Specification for Steel Bars, Carbon, Cold-Finished, Standard Quality

ASTM A 126-95e1 (2000) Standard Specification for Gray Iron Castings for Valves, Flanges, and Pipe Fittings

ASTM A 197-00 Standard Specification for Cupola Malleable Iron

ASTM A 395-99 Standard Specification for Ferritic Ductile Iron Pressure-Retaining Castings for Use at Elevated Temperatures

ASTM A 505-00 Standard Specification for Steel, Sheet and Strip, Alloy, Hot-Rolled and Cold-Rolled,

ASTM A 536-84 (99e1) Standard Specification for Ductile Iron Castings

ASTM A 589-96 (2001) Standard Specification for Seamless and Welded Carbon Steel Water-Well Pipe

ASTM B 16-00 Standard Specification for Free-Cutting Brass Rod, Bar and Shapes for Use in Screw Machines

ASTM B 62-93 Standard Specification for Composition Bronze or Ounce Metal Castings

ASTM B 282-83a(1995)e1 Standard Specification for Sintered Brass Structural Parts

ASTM B 283-99a Standard Specification for Copper and Copper-Alloy Die Forgings (Hot-Pressed)

ASTM B 584-00 Standard Specification for Copper Alloy Sand Castings for General Applications

ASTM D 395-01 Standard Test Methods for Rubber Property-Compression Set

ASTM D 412-98a Standard Test Methods for Vulcanized Rubber and Thermoplastic Rubbers and Thermoplastic Elastomers-Tension

ASTM D 471-98el Standard Test Method for Rubber Property-Effect of Liquids

ASTM D 573-99 Standard Test Method for Rubber-Deterioration in an Air Oven

ASTM D 4894-98a Standard Specification for Polytetrafluoroethylene (PTFE) Grannular Molding and Ram Extrusion

ASTM D 4895-98 Standard Specification for Polytetrafluoroethylene (PTFE) Resin Produced from Dispersion

ASTM E 29-93a(1999) Standard Practice for Using Significant Digits in Test Data to Determine Conformance with Specifications

Publisher: The American Society for Testing and Materials (ASTM), 100 Barr Harbor Drive, West Conshohocken, PA 19428-2959

CFR, Title 49, Part 192 – 2000 Transportation of Natural and Other Gas by Pipeline: Minimum Federal Standards

Publisher: US Government Printing Office, Superintendent of Documents, Mail Stop SSOP, Washington, DC 20402-9328

ISA S75.02-1996 Control Valve Capacity Test Procedures

Publisher: Instrument Society of America (ISA), 67 Alexander Drive, PO Box 12277, Research Triangle Park, NC 27709

ISO 9000-1-1994 Quality management and quality assurance standards – Part 1: Guidelines for selection and use

Copyright ASME International
Provided by IHS under license with ASME
No reproduction or networking permitted without license from IHS
Not for Resale

ISO 9000-2-1997 Quality management and quality assurance standards – Part 2: Generic guidelines for the Application of ISO 9001, ISO 9002, and ISO 9003

ISO 9000-3-1997 Quality management and quality assurance standards – Part 3: Guidelines for the application of ISO 9001 to the development, supply, installation, and maintenance of computer software

ISO 9001-1994 Quality Systems – Model for quality assurance in design, development, production, installation, and servicing

ISO 9002-1994 Quality Systems – Model for quality assurance in production, installation, and servicing

ISO 9003-1994 Quality Systems – Model for quality assurance in final inspection and test

Publisher: International Organization for Standardization (ISO), 1 rue de Varembré, Case Postale 56, CH-1121 Genève 20, Switzerland/Suisse

MPIF Standard 35 Materials Standards for P/M Structural Parts

Publisher: Metal Powder Industries Federation (MPIF), 105 College Road East, Princeton, NJ 08540

MSS-SP-25-1998 Standard Marking System for Valves, Fittings, Flanges, and Unions

Publisher: Manufacturers Standardization Society of the Valve and Fittings Industry (MSS), 127 Park Street NE, Vienna, VA 22180

NFPA Z223.1 1999 National Fuel Gas Code

Publisher: National Fire Protection Association (NFPA), 1 Batterymarch Park, Quincy, MA 02269-9101

PPI TR4-2000b HDB/PDB/MRS Listed Materials

Publisher: Plastics Pipe Institute (PPI), 1825 Connecticut Ave., NW, Suite 680, Washington, DC 20009

Publications listed above, which have been approved as American National Standards may be obtained from the American National Standards Institute (ANSI), Inc., 11 West 42nd Street, New York, NY 10036

--`-`-`,,`,,`,`,,`---

Copyright ASME International
Provided by IHS under license with ASME
No reproduction or networking permitted without license from IHS Not for Resale

NONMANDATORY ANNEX B
QUALITY SYSTEM PROGRAM

The products manufactured in accordance with this Standard shall be produced under a quality system program following the principles of an appropriate standard from the ISO 9000 series.[1] A determination of the need for registration and/or certification of the product manufacturer's quality system program by an independent organization shall be the responsibility of the manufacturer. The detailed documentation demonstrating program compliance shall be available to the purchaser at the manufacturer's facility. A written summary description of the program utilized by the product manufacturer shall be available to the purchaser upon request. The product manufacturer is defined as the entity whose name or trademark appears on the product in accordance with the marking or identification requirements of this Standard.

[1] The series is also available from the American National Standards Institute (ANSI) and the American Society for Quality Control (ASQC) as American National Standards that are identified by a prefix ''Q'' replacing the prefix ''ISO.'' Each standard of the series is listed under Annex A, References.

Copyright ASME International
Provided by IHS under license with ASME
No reproduction or networking permitted without license from IHS
Not for Resale



Copyright ASME International
Provided by IHS under license with ASME
No reproduction or networking permitted without license from IHS

Not for Resale