STD.ASME B16.3-ENGL 1998 ■ 0759670 0612702 3T2 ■

ASME B16.3-1998
(Revision of ASME B16.3-1992)

MALLEABLE IRON THREADED FITTINGS

Classes 150 and 300

AN AMERICAN NATIONAL STANDARD

The American Society of Mechanical Engineers

Copyright ASME International
Provided by IHS under license with ASME
No reproduction or networking permitted without license from IHS

Not for Resale

The American Society of Mechanical Engineers

AN AMERICAN NATIONAL STANDARD

MALLEABLE IRON THREADED FITTINGS

Classes 150 and 300

ASME B16.3-1998
(Revision of ASME B16.3-1992)

Copyright ASME International
Provided by IHS under license with ASME
No reproduction or networking permitted without license from IHS

Not for Resale

Date of Issuance: July 19, 1999

The 1998 edition of this Standard is being issued with an automatic addenda subscription service. The use of addenda allows revisions made in response to public review comments or committee actions to be published on a regular yearly basis; revisions published in addenda will become effective 6 months after the Date of Issuance of the addenda. The next edition of this Standard is scheduled for publication in 2003.

ASME issues written replies to inquiries concerning interpretations of technical aspects of this Standard. The interpretations will be included with the above addenda service.

ASME is the registered trademark of The American Society of Mechanical Engineers.

This code or standard was developed under procedures accredited as meeting the criteria for American National Standards. The Standards Committee that approved the code or standard was balanced to assure that individuals from competent and concerned interests have had an opportunity to participate. The proposed code or standard was made available for public review and comment that provides an opportunity for additional public input from industry, academia, regulatory agencies, and the public-at-large.

ASME does not "approve," "rate," or "endorse" any item, construction, proprietary device, or activity.

ASME does not take any position with respect to the validity of any patent rights asserted in connection with any items mentioned in this document, and does not undertake to insure anyone utilizing a standard against liability for infringement of any applicable Letters Patent, nor assumes any such liability. Users of a code or standard are expressly advised that determination of the validity of any such patent rights, and the risk of infringement of such rights, is entirely their own responsibility.

Participation by federal agency representative(s) or person(s) affiliated with industry is not to be interpreted as government or industry endorsement of this code or standard.

ASME accepts responsibility for only those interpretations issued in accordance with governing ASME procedures and policies which precludes the issuance of interpretations by individual volunteers.

No part of this document may be reproduced in any form,
in an electronic retrieval system or otherwise,
without the prior written permission of the publisher.

The American Society of Mechanical Engineers
Three Park Avenue, New York, NY 10016-5990

Copyright © 1999 by
THE AMERICAN SOCIETY OF MECHANICAL ENGINEERS
All Rights Reserved
Printed in U.S.A.

Copyright ASME International
Provided by IHS under license with ASME
No reproduction or networking permitted without license from IHS

Not for Resale

FOREWORD

In 1921, the American Engineering Standards Committee, later the American Standards Association (ASA) and currently the American National Standards Institute (ANSI), authorized the organization of a Sectional Committee on the Standardization of Pipe Flanges and Flanged Fittings, with the following organizations as joint sponsors: Heating, Piping, and Air Conditioning Contractors National Association (later the Mechanical Contractors Association of America, MCAA), Manufacturers Standardization Society of the Valves and Fittings Industry (MSS), and The American Society of Mechanical Engineers (ASME).

Threaded fittings were also included in the scope of the B16 Committee, and Subcommittee Number 2 (now Subcommittee B) was made responsible for threaded fittings other than steel. The first edition of a standard covering malleable iron fittings, 150 lb, was approved as American Tentative Standard by ASA in December 1927. In 1936, a revision was undertaken to add hydraulic service ratings, material specifications, alignment tolerances, and dimensions for additional sizes. It was approved with the designation American Standard B16c-1939.

Pipe plugs, bushings, and locknuts, included in the first editions, are now covered in a separate standard, B16.14.

A revision begun in 1947 amplified the sections on threading, inspection, and tolerances, and added dimensions for additional sizes of elbows, reducing crosses, reducing tees, straight and reducing couplings, caps, and return bends. It was approved as ASA B16.3-1951.

Meanwhile, MSS, in cooperation with the Association of American Railroads (AAR), developed the first standard for 300 lb malleable iron threaded fittings, published as MSS SP-31 of 1932. The 1950 edition of SP-31, which agreed with AAR Purchase Specification M-404, was submitted to ASA Sectional Committee B16 and assigned to Subcommittee Number 2. After balloting, it was approved as a separated standard, ASA B16.19-1951.

Work was begun to combine the two standards (for 150 lb and 300 lb) into a single document in 1961. The resulting Standard was approved as ASA B16.3-1963. Subsequent reviews of the Standard, leading to revisions approved as ANSI B16.3-1971 and ANSI B16.3-1977, involved updating of referenced standards and the introduction of metric (SI) dimensions and ratings. In the 1977 edition, 150 lb and 300 lb were redesignated as Class 150 and Class 300.

In 1982, American National Standards Committee B16 became the ASME B16 Standards Committee, operating with the same scope under ASME procedures accredited by ANSI. A further revision of the standard, approved and published as ANSI/ASME B16.3-1985, provided for electrodeposition as an alternative to hot dipping when zinc coating was required.

The 1992 edition of B16.3 omits metric units, establishing U.S. customary units as the standard. Clarifications and editorial revisions were made in order to improve the text. Following approval by the Standards Committee and ASME, the 1992 edition received approval as an American National Standard on December 2, 1992, with the designation ASME B16.3-1992.

In the 1998 edition of ASME B16.3, the References section has been updated, a Quality System Program Annex has been added, and several editorial revisions have been made.

Copyright ASME International
Provided by IHS under license with ASME
No reproduction or networking permitted without license from IHS
Not for Resale

Following approval by ASME B16 Subcommittee B and B16 Main Committee, ANSI approved this American National Standard on November 20, 1998.

Requests for interpretation and suggestions for revision should be sent to the Secretary, B16 Committee, The American Society of Mechanical Engineers, Three Park Avenue, New York, NY 10016-5990.

Copyright ASME International
Provided by IHS under license with ASME
No reproduction or networking permitted without license from IHS
Not for Resale

ASME B16 COMMITTEE
Standardization of Valves, Flanges, Fittings, Gaskets, and Valve Actuators

(The following is the roster of the Committee at the time of approval of this Standard.)

OFFICERS

W. N. McLean, *Chair*
H. R. Sonderegger, *Vice Chair*
P. A. Reddington, *Secretary*

COMMITTEE PERSONNEL

W. L. Ballis, Consultant, London, Ohio
R. W. Barnes, Anric Enterprises, Etobicoke, Ontario, Canada
R. R. Brodin, Fisher Controls International, Inc., Marshalltown, Iowa
M. A. Clark, Nibco, Inc., Elkhart, Indiana
A. Cohen, A. Cohen and Associates, Albuquerque, New Mexico
C. E. Floren, Mueller Co., Decatur, Illinois
D. R. Frikken, Solutia, Inc., St. Louis, Missouri
R. Henrich, Minnegasco, Inc., Golden Valley, Minnesota
J. C. Inch, Mueller Refrigeration Products Co., Hartsville, Tennessee
G. A. Jolly, Vogt Valve Co., Louisville, Kentucky
W. G. Knecht, BW/IP International, Inc., Williamsport, Pennsylvania
R. Koester, The William Powell Co., Cincinnati, Ohio
W. N. McLean, Newco Valves, Palos Park, Illinois
M. L. Nayyar, Bechtel Power Corp., Gaithersburg, Maryland
P. A. Reddington, American Society of Mechanical Engineers, New York, New York
R. A. Schmidt, Trinity-Ladish Co., Russellville, Arkansas
H. R. Sonderegger, Grinnell Corp., Cranston, Rhode Island
W. M. Stephan, Flexitallic, Inc., Mount Laurel, New Jersey
T. F. Stroud, Ductile Iron Pipe Research Association, Birmingham, Alabama
M. D. Wasicek, ABS Americas, Houston, Texas
R. E. White, Richard E. White and Associates, South Bend, Indiana
D. A. Williams, Southern Company Services, Birmingham, Alabama
L. A. Willis, The Dow Chemical Co., Freeport, Texas
W. R. Worley, Union Carbide Corp., South Charleston, West Virginia

SUBCOMMITTEE B — THREADED FITTINGS (EXCEPT STEEL)

H. R. Sonderegger, *Chair,* Grinnell Corp., Cranston, Rhode Island
B. P. Feder, *Secretary,* American Society of Mechanical Engineers, New York, New York
K. Barron, Ward Manufacturing, Blossburg, Pennsylvania
M. A. Clark, Nibco, Inc., Elkhart, Indiana
A. Cohen, A. Cohen and Associates, Albuquerque, New Mexico
A. A. Knapp, Canadian Copper/Brass Development Association, North York, Ontario, Canada
R. L. Larkin, American Darling Valve, Birmingham, Alabama
P. I. McGrath, Jr., Consultant, Birmingham, Alabama
W. N. McLean, Newco Valves, Palos Park, Illinois
J. K. Schultz, Conine Manufacturing Co., Inc., Tyler, Texas

Copyright ASME International
Provided by IHS under license with ASME
No reproduction or networking permitted without license from IHS
Not for Resale

CONTENTS

Foreword iii
Standards Committee Roster v

1 Scope 1
2 Pressure–Temperature Ratings 1
3 Size 1
4 Marking 1
5 Material 1
6 Dimensions and Tolerances 2
7 Threading 2
8 Ribs 3
9 Plugs, Bushings, and Locknuts 3
10 Face Bevel 3
11 Coatings 4

Figures
1 Identification of Reducing Fittings 2
2 Gaging of Chamfered Internal Threads 3

Tables
1 Pressure–Temperature Ratings 2
2 Inspection Tolerances 3
3 Dimensions of Class 150, 90 deg Elbows, Tees, and Crosses, and 45 deg Elbows (Straight Sizes) 4
4 Dimensions of Class 150, 90 deg Elbows and Crosses (Reducing Sizes) 5
5 Dimensions of Class 150 Tees (Reducing Sizes) 6
6 Dimensions of Class 150, 45 deg Y-Branches (Straight Sizes) 7
7 Dimensions of Class 150 Street Tees and 90 deg and 45 deg Street Elbows 8
8 Dimensions of Class 150 Couplings (Straight and Reducing Sizes) 9
9 Dimensions of Class 150 Caps 10
10 Dimensions of Class 150, Closed-, Medium-, and Open-Pattern Return Bends 11
11 Dimensions of Class 300, 90 deg Elbows, Tees, and Crosses, and 45 deg Elbows (Straight Sizes) 12
12 Center-to-End Dimensions of Class 300, 90 deg Elbows (Reducing Sizes) 13
13 Center-to-End Dimensions of Class 300 Tees (Reducing Sizes) 13
14 Dimensions of Class 300 Couplings 14
15 Dimensions of Class 300 Reducing Couplings 15
16 Dimensions of Class 300 Caps 16
17 Dimensions of Class 300, 90 deg and 45 deg Street Elbows 17
18 Dimensions of Class 300 Return Bends 18

Copyright ASME International
Provided by IHS under license with ASME
No reproduction or networking permitted without license from IHS
Not for Resale

Mandatory Annex

I References 19

Nonmandatory Annex

A Quality System Program 21

Copyright ASME International
Provided by IHS under license with ASME
No reproduction or networking permitted without license from IHS
Not for Resale

MALLEABLE IRON THREADED FITTINGS
Classes 150 and 300

1 SCOPE

1.1 General

This Standard for malleable iron threaded fittings, Classes 150 and 300, covers:

(a) pressure–temperature ratings,

(b) size and method of designating openings of reducing fittings,

(c) marking,

(d) material,

(e) dimensions and tolerances,

(f) threading, and

(g) coatings.

1.2 References

Standards and specifications adopted by reference in this Standard are shown in Annex I, which is part of this Standard.

1.3 Quality Systems

Requirements relating to the product manufacturers' Quality System Programs are described in Annex A.

2 PRESSURE–TEMPERATURE RATINGS

(a) Pressure–temperature ratings for these fittings are shown in Table 1. Ratings are independent of the contained fluid and are the maximum nonshock pressures at the tabulated temperatures. Intermediate ratings may be obtained by linear interpolation between the temperatures shown.

(b) The temperatures shown for the corresponding pressure rating shall be the material temperature of the pressure-retaining structure. It may be assumed that the material temperature is the same as the fluid temperature. Use of a pressure rating at a material temperature other than that of the contained fluid is the responsibility of the user and subject to the requirements of any applicable code.

(c) Class 300 street elbows are not recommended for gage pressures above 600 psi.

3 SIZE

The sizes of the fittings scheduled in Tables 3 through 18 are identified by the corresponding nominal[1] pipe sizes (NPS).

For reducing tees, crosses, and Y-branches (laterals), the size of the largest run opening shall be given first, followed by the size of the opening at the opposite end of the run. Where the fitting is a tee or Y-branch (lateral), the size of the outlet is given last. Where the fitting is a cross, the largest side-outlet opening is the third dimension given, followed by the opposite opening. The straight-line sketches of Fig. 1 illustrate how the reducing fittings are read.

4 MARKING

4.1 Class 150 Fittings

Each Class 150 fitting shall be marked for identification with the manufacturer's name or trademark.

4.2 Class 300 Fittings

Each Class 300 fitting shall be marked for identification with:

(a) the manufacturer's name or trademark,

(b) the numerals "300,"

(c) the letters "MI" to designate malleable iron,

(d) the size, and

(e) other markings as permitted by MSS SP-25, Standard Practice Marking System for Valves, Fittings, Flanges, and Unions.

5 MATERIAL

5.1 Malleable Iron

The chemical and physical properties of the castings shall be in accordance with ASTM A 197, Specification for Cupola Malleable Iron. The manufacturer shall

[1] The use of the word "nominal" as a modifier of a dimension or size is intended to indicate that the stated dimension or size is used for purposes of designation.

Copyright ASME International
Provided by IHS under license with ASME
No reproduction or networking permitted without license from IHS
Not for Resale

TABLE 1 PRESSURE–TEMPERATURE RATINGS

Temperature, °F	Class 150, psig	Class 300, psig Sizes $^1/_4$–1	Sizes $1^1/_4$–2	Sizes $2^1/_2$–3
–20 to 150	300	2000	1500	1000
200	265	1785	1350	910
250	225	1575	1200	825
300	185	1360	1050	735
350	150 [Note (1)]	1150	900	650
400	...	935	750	560
450	...	725	600	475
500	...	510	450	385
550	...	300	300	300

NOTE:
(1) Permissible for service temperature up to 366°F, reflecting the temperature of saturated steam at 150 psig.

be prepared to certify that the product has been so produced.

5.2 Steel

Class 150 couplings and caps in NPS $^1/_8$, $^1/_4$, and $^3/_8$ may be made from steel rod or bar with a minimum yield strength of 30 ksi at the manufacturer's option.

6 DIMENSIONS AND TOLERANCES

6.1 General

Tables 3 through 18 of center-to-end dimensions are given for both straight and reducing fittings.

6.2 Reducing Fittings

The dimensions in Tables 3 through 18 of reducing fittings are for use only when making patterns for the specific reducing fitting in question and do not apply when a larger size pattern is bushed to make the reducing fitting wanted.

6.3 Tolerances

It is recognized that some variations are absolutely unavoidable in the making of patterns and castings. The following tolerances shall be permitted.

(a) Metal Thickness Tolerances. Metal thickness at no point in the castings shall be less than 90% of the value given in the tables.

(b) Center-to-End Tolerances. Permitted tolerances on the center-to-end dimensions of the fittings are shown in Table 2. Tolerances for end-to-end dimensions and lengths of couplings and reducers shall be twice those given. The largest opening in a reducing fitting governs the tolerances to be applied to all openings. These tolerances do not apply to return bends and caps.

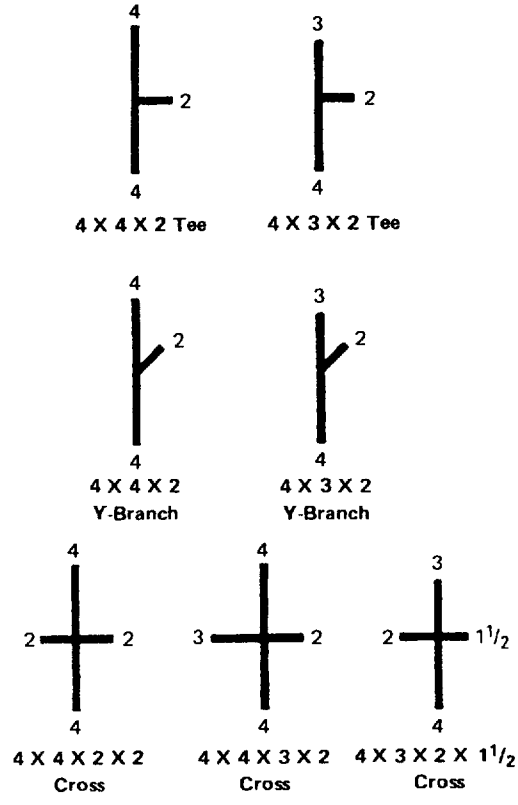

FIG. 1 IDENTIFICATION OF REDUCING FITTINGS

7 THREADING

7.1 Types of Threads

All fittings shall be threaded according to ASME B1.20.1, Pipe Threads, General Purpose (Inch), and shall have taper threads, except wrought couplings (Table 8) and wrought caps (Table 9) in NPS $^1/_8$, $^1/_4$, and $^3/_8$, which may have straight threads.

7.2 Tolerances

Variations in taper threading shall be limited to one turn large or one turn small from the gaging face on ring and gaging notch on plug when using working gages. The variations in straight threading shall be limited to one and one-half turns large or small from

Copyright ASME International
Provided by IHS under license with ASME
No reproduction or networking permitted without license from IHS
Not for Resale

TABLE 2 INSPECTION TOLERANCES

Nominal Pipe Size	Plus or Minus, in.
1/8	0.03
1/4	0.04
3/8	0.05
1/2, 3/4	0.06
1, 1 1/4	0.07
1 1/2, 2	0.08
2 1/2, 3, 3 1/2	0.10
4, 5	0.12
6	0.14

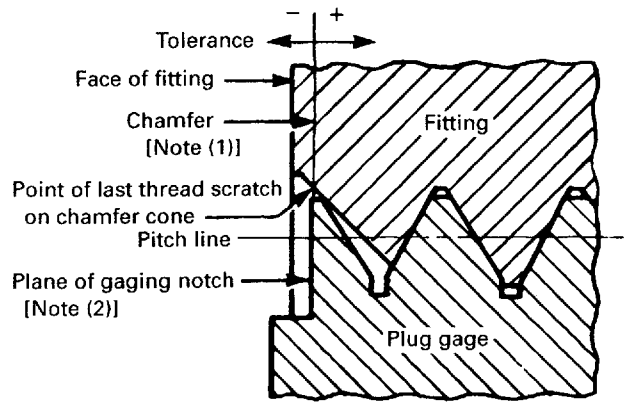

GENERAL NOTE:
Enlarged view showing chamfered internal thread of basic size with chamfer exceeding the major diameter.

NOTES:
(1) The chamfer illustrated is at a 45 deg angle and is approximately 3/8 pitch in depth. However, these details are not requirements and are given only for information on the illustration shown.
(2) Plane of gaging notch should intersect crest of thread on gage.

FIG. 2 GAGING OF CHAMFERED INTERNAL THREADS

the gaging notch on plug when using a taper pipe thread working gage. The reference point for gaging internal fittings threads depends upon the chamfer diameter. When the internal chamfer diameter exceeds the major diameter of the internal thread, the reference point is the last thread scratch on the chamfer cone. When the internal chamfer diameter does not exceed the major diameter of the internal thread, the reference point is the end of the fitting (see Fig. 2).

7.3 Countersink or Chamfer

For the purpose of easier entrance in making a joint and for protection of the thread, all internal threads shall be countersunk a distance of not less than one-half the pitch of the thread at an angle of approximately 45 deg with the axis of the thread; all external threads shall be chamfered at an angle of 30 deg to 45 deg with the axis. Countersinking and chamfering shall be concentric with the threads.

7.4 Thread Length

The length of threads specified in all tables shall be measured to include the countersink or chamfer.

7.5 Alignment

The maximum allowable variation in the alignment of threads of all openings of threaded fittings shall be 0.06 in./ft (0.5%).

8 RIBS

8.1 General

The addition of ribs or lugs is permitted on threaded fittings. Where ribs are used, it is recommended that their thickness shall be the same as specified for metal thickness of the fitting. Right-hand couplings shall have not more than two ribs.

8.2 Special Couplings

Right- and left-hand couplings shall have four or more ribs unless the left-hand opening is clearly marked "L," in which case the use of ribs is optional with the manufacturer.

9 PLUGS, BUSHINGS, AND LOCKNUTS

For dimensions of plugs, bushings, and locknuts to be used in connection with Classes 150 and 300 malleable iron threaded fittings, see ASME B16.14, Ferrous Pipe Plugs, Bushings, and Locknuts With Pipe Threads.

10 FACE BEVEL

A bevel not exceeding 5 deg is permitted on the faces of fitting openings. Center-to-end, end-to-end, and width of band dimensions may include or exclude the bevel.

Copyright ASME International
Provided by IHS under license with ASME
No reproduction or networking permitted without license from IHS
Not for Resale

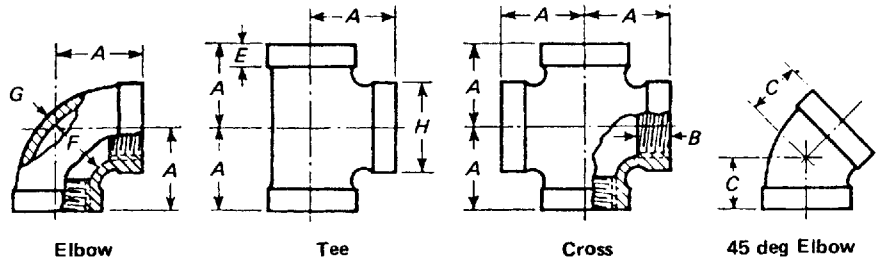

TABLE 3 DIMENSIONS OF CLASS 150, 90 deg ELBOWS, TEES, AND CROSSES, AND 45 deg ELBOWS (STRAIGHT SIZES)

Nominal Pipe Size	Center-to-End, Elbows, Tees, and Crosses, *A* [Note (1)]	Center-to-End, 45 deg Elbows, *C*	Length of Thread, Min., *B*	Width of Band, Min., *E*	Inside Diameter of Fitting, *F*		Metal Thickness, *G*	Outside Diameter of Band, Min., *H*
					Min.	Max.		
1/8	0.69	...	0.25	0.20	0.40	0.43	0.09	0.69
1/4	0.81	0.73	0.32	0.21	0.54	0.58	0.09	0.84
3/8	0.95	0.80	0.36	0.23	0.67	0.72	0.10	1.01
1/2	1.12	0.88	0.43	0.25	0.84	0.90	0.10	1.20
3/4	1.31	0.98	0.50	0.27	1.05	1.11	0.12	1.46
1	1.50	1.12	0.58	0.30	1.31	1.38	0.13	1.77
1 1/4	1.75	1.29	0.67	0.34	1.66	1.73	0.14	2.15
1 1/2	1.94	1.43	0.70	0.37	1.90	1.97	0.15	2.43
2	2.25	1.68	0.75	0.42	2.37	2.44	0.17	2.96
2 1/2	2.70	1.95	0.92	0.48	2.87	2.97	0.21	3.59
3	3.08	2.17	0.98	0.55	3.50	3.60	0.23	4.28
3 1/2	3.42	2.39	1.03	0.60	4.00	4.10	0.25	4.84
4	3.79	2.61	1.08	0.66	4.50	4.60	0.26	5.40
5	4.50	3.05	1.18	0.78	5.56	5.66	0.30	6.58
6	5.13	3.46	1.28	0.90	6.62	6.72	0.34	7.77

GENERAL NOTE: Dimensions are in inches.

NOTE:

(1) Dimensions for reducing elbows and reducing crosses are given in Table 4 and dimensions for reducing tees in Table 5.

11 COATINGS

11.1 Malleable Iron Fittings

When malleable iron fittings are zinc coated, they shall be hot dipped in accordance with ASTM A 153 or have an electrodeposited zinc coating conforming to ASTM B 633, Type I, Service Condition 4. Hot-dipped coatings shall be 0.0034 in. minimum thickness and applied prior to threading. Electrodeposited zinc shall be 0.001 in. minimum thickness and applied following threading.

11.2 Steel Fittings

Couplings and caps made from steel rod or bar may have electrodeposited zinc coatings conforming to ASTM B 633, Type I, Service Condition 4, or cadmium coatings conforming to ASTM B 766, Type NS. The electrodeposited coatings shall be applied after threading.

11.3 Other Coatings

Other coatings specified by the purchaser shall be furnished meeting the agreed requirements.

Copyright ASME International
Provided by IHS under license with ASME
No reproduction or networking permitted without license from IHS

Not for Resale

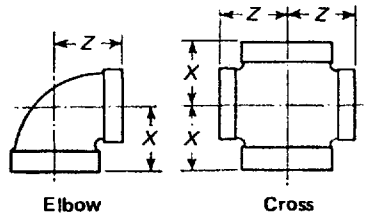

TABLE 4 DIMENSIONS OF CLASS 150, 90 deg ELBOWS AND CROSSES (REDUCING SIZES)

Elbows						Crosses		
Nominal Pipe Size	Center-to-End		Nominal Pipe Size	Center-to-End		Nominal Pipe Size	Center-to-End	
	X	Z		X	Z		X	Z
1/4 × 1/8	0.74	0.76	1 1/2 × 1 1/4	1.82	1.88	3/4 × 3/4 × 1/2 × 1/2	1.20	1.22
3/8 × 1/4	0.88	0.90	1 1/2 × 1	1.65	1.80	1 × 1 × 3/4 × 3/4	1.37	1.45
3/8 × 1/8	0.81	0.85	1 1/2 × 3/4	1.52	1.75	1 × 1 × 1/2 × 1/2	1.26	1.36
1/2 × 3/8	1.04	1.03	2 × 1 1/2	2.02	2.16	1 1/4 × 1 1/4 × 1 × 1	1.58	1.67
1/2 × 1/4	0.97	0.98	2 × 1 1/4	1.90	2.10	1 1/4 × 1 1/4 × 3/4 × 3/4	1.45	1.62
			2 × 1	1.73	2.02			
3/4 × 1/2	1.20	1.22				1 1/2 × 1 1/2 × 1 1/4 × 1 1/4	1.82	1.88
3/4 × 3/8	1.12	1.13	2 × 3/4	1.60	1.97	1 1/2 × 1 1/2 × 1 × 1	1.65	1.80
3/4 × 1/4	1.05	1.08	2 1/2 × 2	2.39	2.60	1 1/2 × 1 1/2 × 3/4 × 3/4	1.52	1.75
1 × 3/4	1.37	1.45	2 1/2 × 1 1/2	2.16	2.51	2 × 2 × 1 1/2 × 1 1/2	2.02	2.16
1 × 1/2	1.26	1.36	3 × 2 1/2	2.83	2.99	2 × 2 × 1 1/4 × 1 1/4	1.90	2.10
			3 × 2	2.52	2.89			
1 × 3/8	1.18	1.27				2 × 2 × 1 × 1	1.73	2.02
1 1/4 × 1	1.58	1.67	4 × 3	3.30	3.60	2 × 2 × 3/4 × 3/4	1.60	1.97
1 1/4 × 3/4	1.45	1.62				2 1/2 × 2 1/2 × 2 × 2	2.39	2.60
1 1/4 × 1/2	1.34	1.53				3 × 3 × 2 × 2	2.52	2.89

GENERAL NOTES:
(a) Dimensions are in inches.
(b) For dimensions not given, see Table 3.
(c) Reducing sizes of fittings for which dimensions are not given in tables may be produced from regular patterns for listed sizes by sand bushing.

Copyright ASME International
Provided by IHS under license with ASME
No reproduction or networking permitted without license from IHS
Not for Resale

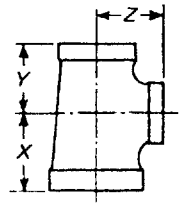

TABLE 5 DIMENSIONS OF CLASS 150 TEES (REDUCING SIZES)

Nominal Pipe Size	Center-to-End			Nominal Pipe Size	Center-to-End			Nominal Pipe Size	Center-to-End		
	X	Y	Z		X	Y	Z		X	Y	Z
1/4 × 1/4 × 1/8	0.74	0.74	0.76	1 1/4 × 1 × 1	1.58	1.50	1.67	2 × 3/4 × 2	2.25	1.97	2.25
1/8 × 1/8 × 1/4	0.76	0.76	0.74	1 1/4 × 1 × 3/4	1.45	1.37	1.62	2 × 1/2 × 2	2.25	1.88	2.25
3/8 × 3/8 × 1/4	0.88	0.88	0.90	1 1/4 × 1 × 1/2	1.34	1.26	1.53	1 1/2 × 1 1/2 × 2	2.16	2.16	2.02
3/8 × 3/8 × 1/8	0.81	0.81	0.85	1 1/4 × 3/4 × 1 1/4	1.75	1.62	1.75	1 1/4 × 1 1/4 × 2	2.10	2.10	1.90
3/8 × 1/4 × 3/8	0.95	0.90	0.95	1 1/4 × 3/4 × 1	1.58	1.45	1.67	1 × 1 × 2	2.02	2.02	1.73
3/8 × 1/4 × 1/4	0.88	0.81	0.90	1 1/4 × 3/4 × 3/4	1.45	1.31	1.62	2 1/2 × 2 1/2 × 2	2.39	2.39	2.60
1/4 × 1/4 × 3/8	0.90	0.90	0.88	1 1/4 × 1/2 × 1 1/4	1.75	1.53	1.75	2 1/2 × 2 1/2 × 1 1/2	2.16	2.16	2.51
1/2 × 1/2 × 3/8	1.04	1.04	1.03	1 1/4 × 1/2 × 1	1.58	1.36	1.67	2 1/2 × 2 1/2 × 1 1/4	2.04	2.04	2.45
1/2 × 1/2 × 1/4	0.97	0.97	0.98	1 × 1 × 1 1/4	1.67	1.67	1.58	2 1/2 × 2 1/2 × 1	1.87	1.87	2.37
1/2 × 3/8 × 1/2	1.12	1.03	1.12	3/4 × 3/4 × 1 1/4	1.62	1.62	1.45	2 1/2 × 2 1/2 × 3/4	1.74	1.74	2.32
1/2 × 3/8 × 3/8	1.04	0.95	1.03	1 1/2 × 1 1/2 × 1 1/4	1.82	1.82	1.88	2 1/2 × 2 × 2 1/2	2.70	2.60	2.70
1/2 × 1/4 × 1/2	1.12	0.98	1.12	1 1/2 × 1 1/2 × 1	1.65	1.65	1.80	2 1/2 × 2 × 2	2.39	2.25	2.60
3/8 × 3/8 × 1/2	1.03	1.03	1.04	1 1/2 × 1 1/2 × 3/4	1.52	1.52	1.75	2 1/2 × 1 1/2 × 2 1/2	2.70	2.51	2.70
3/4 × 3/4 × 1/2	1.20	1.20	1.22	1 1/2 × 1 1/2 × 1/2	1.41	1.41	1.66	2 1/2 × 1 1/2 × 2	2.39	2.16	2.60
3/4 × 3/4 × 3/8	1.12	1.12	1.13	1 1/2 × 1 1/4 × 1 1/2	1.94	1.88	1.94	2 × 2 × 2 1/2	2.60	2.60	2.39
3/4 × 3/4 × 1/4	1.05	1.05	1.08	1 1/2 × 1 1/4 × 1 1/4	1.82	1.75	1.88	3 × 3 × 2 1/2	2.83	2.83	2.99
3/4 × 1/2 × 3/4	1.31	1.22	1.31	1 1/2 × 1 1/4 × 1	1.65	1.58	1.80	3 × 3 × 2	2.52	2.52	2.89
3/4 × 1/2 × 1/2	1.20	1.12	1.22	1 1/2 × 1 1/4 × 3/4	1.52	1.45	1.75	3 × 3 × 1 1/2	2.29	2.29	2.80
3/4 × 1/2 × 3/8	1.12	1.04	1.13	1 1/2 × 1 1/4 × 1/2	1.41	1.34	1.66	3 × 3 × 1 1/4	2.17	2.17	2.74
3/4 × 3/8 × 3/4	1.31	1.13	1.31	1 1/2 × 1 × 1 1/2	1.94	1.80	1.94	3 × 3 × 1	2.00	2.00	2.66
3/4 × 3/8 × 3/8	1.12	0.95	1.13	1 1/2 × 1 × 1 1/4	1.82	1.67	1.88	3 × 3 × 3/4	1.87	1.87	2.61
3/4 × 1/4 × 3/4	1.31	1.08	1.31	1 1/2 × 1 × 1	1.65	1.50	1.80	3 × 2 1/2 × 3	3.08	2.99	3.08
1/2 × 1/2 × 3/4	1.22	1.22	1.20	1 1/2 × 3/4 × 1 1/2	1.94	1.75	1.94	3 × 2 1/2 × 2 1/2	2.83	2.70	2.99
1 × 1 × 3/4	1.37	1.37	1.45	1 1/2 × 1/2 × 1 1/2	1.94	1.66	1.94	3 × 2 1/2 × 2	2.52	2.39	2.89
1 × 1 × 1/2	1.26	1.26	1.36	1 1/4 × 1 1/4 × 1 1/2	1.88	1.88	1.82	3 × 2 × 3	3.08	2.89	3.08
1 × 1 × 3/8	1.18	1.18	1.27	1 × 1 × 1 1/2	1.80	1.80	1.65	3 × 2 × 2	2.52	2.25	2.89
1 × 1 × 1/4	1.11	1.11	1.22	2 × 2 × 1 1/2	2.02	2.02	2.16	2 1/2 × 2 1/2 × 3	2.99	2.99	2.83
1 × 3/4 × 1	1.50	1.45	1.50	2 × 2 × 1 1/4	1.90	1.90	2.10	3 1/2 × 3 1/2 × 2 1/2	2.93	2.93	3.24
1 × 3/4 × 3/4	1.37	1.31	1.45	2 × 2 × 1	1.73	1.73	2.02	4 × 4 × 3	3.30	3.30	3.60
1 × 3/4 × 1/2	1.26	1.20	1.36	2 × 2 × 3/4	1.60	1.60	1.97	4 × 4 × 2 1/2	3.05	3.05	3.51
1 × 1/2 × 1	1.50	1.36	1.50	2 × 2 × 1/2	1.49	1.49	1.88	4 × 4 × 2	2.74	2.74	3.41
1 × 1/2 × 3/4	1.37	1.22	1.45	2 × 1 1/2 × 2	2.25	2.16	2.25	4 × 4 × 1 1/2	2.51	2.51	3.32
1 × 1/2 × 1/2	1.26	1.12	1.36	2 × 1 1/2 × 1 1/2	2.02	1.94	2.16	4 × 3 × 4	3.79	3.60	3.79
3/4 × 3/4 × 1	1.45	1.45	1.37	2 × 1 1/2 × 1 1/4	1.90	1.82	2.10	3 × 3 × 4	3.60	3.60	3.30
1/2 × 1/2 × 1	1.36	1.36	1.26	2 × 1 1/2 × 1	1.73	1.65	2.02	5 × 5 × 3	3.51	3.51	4.22
1 1/4 × 1 1/4 × 1	1.58	1.58	1.67	2 × 1 1/4 × 2	2.25	2.10	2.25	6 × 6 × 4	4.13	4.13	4.94
1 1/4 × 1 1/4 × 3/4	1.45	1.45	1.62	2 × 1 1/4 × 1 1/2	2.02	1.88	2.16	6 × 6 × 3	3.64	3.64	4.75
1 1/4 × 1 1/4 × 1/2	1.34	1.34	1.53	2 × 1 1/4 × 1 1/4	1.90	1.75	2.10	6 × 6 × 2 1/2	3.39	3.39	4.66
1 1/4 × 1 1/4 × 3/8	1.26	1.26	1.44	2 × 1 × 2	2.25	2.02	2.25	6 × 6 × 2	3.08	3.08	4.56
1 1/4 × 1 × 1 1/4	1.75	1.67	1.75	2 × 1 × 1 1/2	2.02	1.80	2.16				

GENERAL NOTES:
(a) Dimensions are in inches.
(b) For dimensions not given, see Table 3.
(c) Reducing sizes of fittings for which dimensions are not given in tables may be produced from regular patterns for listed sizes by sand bushing.

Copyright ASME International
Provided by IHS under license with ASME
No reproduction or networking permitted without license from IHS
Not for Resale

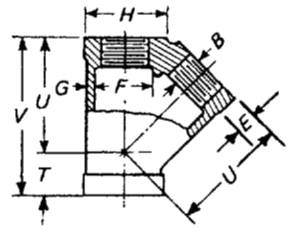

TABLE 6 DIMENSIONS OF CLASS 150, 45 deg Y-BRANCHES (STRAIGHT SIZES)

Nominal Pipe Size	Length of Thread, Min., *B*	Width of Band, Min., *E*	Inside Diameter of Fittings, *F*		Metal Thickness, *G*	Outside Diameter of Band, Min., *H*	Center-to-End Inlet, *T*	Center-to-End Outlet, *U*	End-to-End, *V*
			Min.	Max.					
3/8	0.36	0.23	0.67	0.72	0.10	1.01	0.50	1.43	1.93
1/2	0.43	0.25	0.84	0.90	0.10	1.20	0.61	1.71	2.32
3/4	0.50	0.27	1.05	1.11	0.12	1.46	0.72	2.05	2.77
1	0.58	0.30	1.31	1.38	0.13	1.77	0.85	2.43	3.28
1 1/4	0.67	0.34	1.66	1.73	0.14	2.15	1.02	2.92	3.94
1 1/2	0.70	0.37	1.90	1.97	0.15	2.43	1.10	3.28	4.38
2	0.75	0.42	2.37	2.44	0.17	2.96	1.24	3.93	5.17
2 1/2	0.92	0.48	2.87	2.97	0.21	3.59	1.52	4.73	6.25
3	0.98	0.55	3.50	3.60	0.23	4.28	1.71	5.55	7.26
4	1.08	0.66	4.50	4.60	0.26	5.40	2.01	6.97	8.98

GENERAL NOTE: Dimensions are in inches.

Copyright ASME International
Provided by IHS under license with ASME
No reproduction or networking permitted without license from IHS Not for Resale

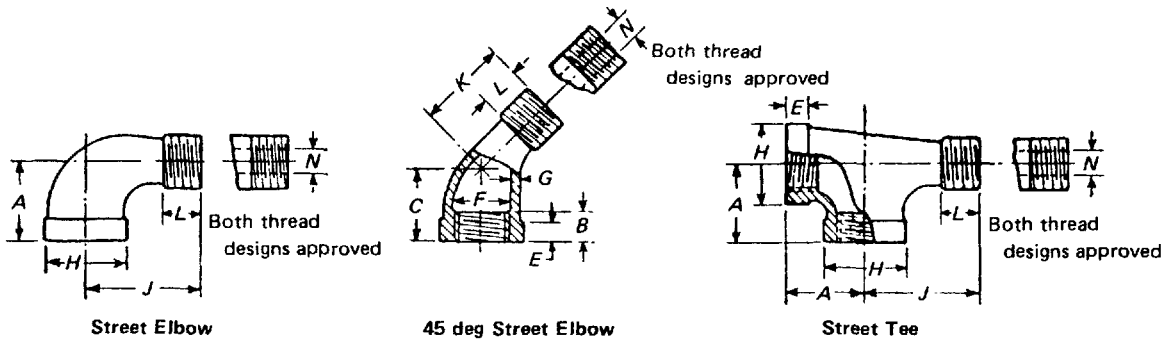

TABLE 7 DIMENSIONS OF CLASS 150 STREET TEES AND 90 deg AND 45 deg STREET ELBOWS

Nominal Pipe Size	Center-to-End, Elbows and Tees, *A*	Center-to-End, 45 deg Elbows, *C*	Length of Thread, Min., *B*	Width of Band, Min., *E*	Inside Diameter of Fittings, *F*		Metal Thickness, *G*	Outside Diameter of Band, Min., *H*	Center-to-Male End Elbows and Tees, *J*	Center-to-Male End 45 deg Elbows, *K*	Length of External Thread, Min., *L*	Max. Port Diameter Male End, *N*
					Min.	Max.						
1/8	0.69 [Note (1)]	...	0.25	0.20	0.40	0.43	0.09	0.69	1.00 [Note (1)]	...	0.26	0.20
1/4	0.81	0.73	0.32	0.21	0.54	0.58	0.09	0.84	1.19	0.94	0.40	0.26
3/8	0.95	0.80	0.36	0.23	0.67	0.72	0.10	1.01	1.44	1.03	0.41	0.37
1/2	1.12	0.88	0.43	0.25	0.84	0.90	0.10	1.20	1.63	1.15	0.53	0.51
3/4	1.31	0.98	0.50	0.27	1.05	1.11	0.12	1.46	1.89	1.29	0.55	0.69
1	1.50	1.12	0.58	0.30	1.31	1.38	0.13	1.77	2.14	1.47	0.68	0.91
1 1/4	1.75	1.29	0.67	0.34	1.66	1.73	0.14	2.15	2.45	1.71	0.71	1.19
1 1/2	1.94	1.43	0.70	0.37	1.90	1.97	0.15	2.43	2.69	1.88	0.72	1.39
2	2.25	1.68	0.75	0.42	2.37	2.44	0.17	2.96	3.26	2.22	0.76	1.79
2 1/2	2.70 [Note (1)]	1.95	0.92	0.48	2.87	2.97	0.21	3.59	3.86 [Note (1)]	2.57	1.14	2.20
3	3.08 [Note (1)]	2.17	0.98	0.55	3.50	3.60	0.23	4.28	4.51 [Note (1)]	3.00	1.20	2.78
4	3.79	2.61	1.08	0.66	4.50	4.60	0.26	5.40	5.69	3.70	1.30	3.70
5	4.50 [Note (1)]	...	1.18	0.78	5.56	5.66	0.30	6.58	6.86 [Note (1)]	...	1.41	4.69
6	5.13 [Note (1)]	...	1.28	0.90	6.62	6.72	0.34	7.77	8.03 [Note (1)]	...	1.51	5.67

GENERAL NOTE: Dimensions are in inches.

NOTE:

(1) This dimension applies to street elbows only. Street tees are not made in these sizes.

Copyright ASME International
Provided by IHS under license with ASME
No reproduction or networking permitted without license from IHS
Not for Resale

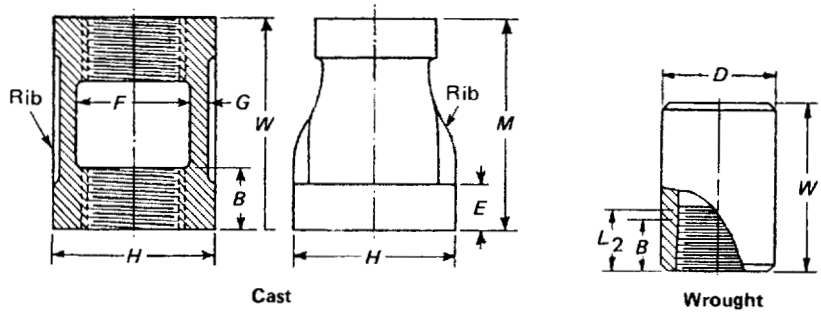

TABLE 8 DIMENSIONS OF CLASS 150 COUPLINGS (STRAIGHT AND REDUCING SIZES)

Nominal Pipe Size	Length of Thread, Min.		Width of Band, Min.,	Inside Diameter of Fittings, F		Metal Thickness,	Outside Diameter of Band, Min.,	Thickness of Ribs	Length of Straight Couplings,	Length of Reducing Concentric Couplings, M [Notes (1) and (2)]	Steel Couplings [Notes (2) and (3)]	
	B	L_2	E	Min.	Max.	G	H		W		Length, W	Outside Diameter, D
1/8	0.25	0.2639	0.20	0.40	0.43	0.09	0.69	0.09	0.96	...	0.81	0.56
1/4	0.32	0.4018	0.21	0.54	0.58	0.09	0.84	0.09	1.06	1.00	1.19	0.72
3/8	0.36	0.4078	0.23	0.67	0.72	0.10	1.01	0.10	1.16	1.13	1.19	0.87
1/2	0.43	...	0.25	0.84	0.90	0.10	1.20	0.10	1.34	1.25	...	...
3/4	0.50	...	0.27	1.05	1.11	0.12	1.46	0.12	1.52	1.44	...	...
1	0.58	...	0.30	1.31	1.38	0.13	1.77	0.13	1.67	1.69	...	...
1 1/4	0.67	...	0.34	1.66	1.73	0.14	2.15	0.14	1.93	2.06	...	...
1 1/2	0.70	...	0.37	1.90	1.97	0.15	2.43	0.15	2.15	2.31	...	...
2	0.75	...	0.42	2.37	2.44	0.17	2.96	0.17	2.53	2.81	...	...
2 1/2	0.92	...	0.48	2.87	2.97	0.21	3.59	0.21	2.88	3.25	...	...
3	0.98	...	0.55	3.50	3.60	0.23	4.28	0.23	3.18	3.69	...	...
4	1.08	...	0.66	4.50	4.60	0.26	5.40	0.26	3.69	4.38	...	...

GENERAL NOTES:
(a) Dimensions are in inches.
(b) Right- and left-hand pattern couplings are standard only in sizes up to and including NPS 2.

NOTES:
(1) Dimension *M* for all reduction of reducing couplings (concentric only) shall be the same as shown for the largest opening. Dimension *M* for eccentric couplings is not standard; such information should be obtained from the manufacturer.
(2) Couplings NPS 3/8 and smaller may be cast or made from steel rod with a minimum yield strength of 30 ksi at the option of the manufacturer.
(3) Steel couplings are made without recess. Dimension *B* for steel couplings is minimum length of perfect thread, and the length of useful thread (*B* plus threads with fully formed roots and flat crests) shall be not less than L_2 (effective length of external thread) required by ASME B1.20.1, Pipe Threads, General Purpose (Inch). See Section 7.

Copyright ASME International
Provided by IHS under license with ASME
No reproduction or networking permitted without license from IHS
Not for Resale

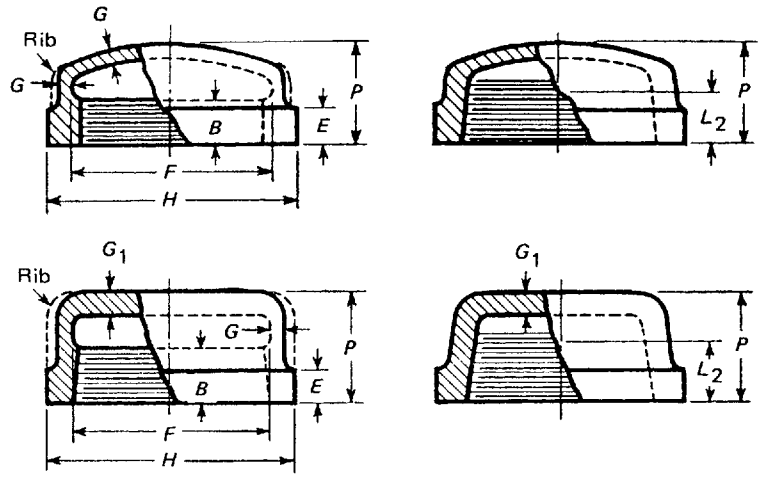

TABLE 9 DIMENSIONS OF CLASS 150 CAPS

Nominal Pipe Size	Length of Thread, Min.		Width of Band, Min.,	Inside Diameter of Fittings, F		Metal Thickness of Side,	Outside Diameter of Band, Min., H	Height, Min., P	Thickness of Ribs	Thickness of Flat Top Caps,
	B	L_2	E	Min.	Max.	G	[Note (1)]	[Note (2)]		G_1
1/8	0.25	0.2639	0.20	0.40	0.43	0.09	0.69	0.53	...	...
1/4	0.32	0.4018	0.21	0.54	0.58	0.09	0.84	0.63	...	...
3/8	0.36	0.4078	0.23	0.67	0.72	0.10	1.01	0.74	...	...
1/2	0.43	0.5337	0.25	0.84	0.90	0.10	1.20	0.87	0.10	...
3/4	0.50	0.5457	0.27	1.05	1.11	0.12	1.46	0.97	0.12	0.13
1	0.58	0.6828	0.30	1.31	1.38	0.13	1.77	1.16	0.13	0.15
1 1/4	0.67	0.7068	0.34	1.66	1.73	0.14	2.15	1.28	0.14	0.17
1 1/2	0.70	0.7235	0.37	1.90	1.97	0.15	2.43	1.33	0.15	0.19
2	0.75	0.7565	0.42	2.37	2.44	0.17	2.46	1.45	0.17	0.22
2 1/2	0.92	1.1375	0.48	2.87	2.97	0.21	3.59	1.70	0.21	0.25
3	0.98	1.2000	0.55	3.50	3.60	0.23	4.28	1.80	0.23	0.29
3 1/2	1.03	1.2500	0.60	4.00	4.10	0.25	4.84	1.90	0.25	0.30
4	1.08	1.3000	0.66	4.50	4.60	0.26	5.40	2.08	0.26	0.36
5	1.18	1.4063	0.78	5.56	5.66	0.30	6.58	2.32	0.30	...
6	1.28	1.5125	0.90	6.62	6.72	0.34	7.77	2.55	0.34	...

GENERAL NOTE: Dimensions are in inches.

NOTES:

(1) Caps sizes 1/8, 1/4, and 3/8 may be malleable castings or made from steel rod with a minimum yield strength of 30 ksi at the option of the manufacturer. When made from steel rod, diameters shall be 0.50, 0.69, and 0.84, respectively. Caps made from steel rod have no recess.

(2) Caps may be made without recess. Caps so made shall be of such height *P* that the length of perfect thread shall be not less than *B*, and the length of useful thread (*B* plus threads with fully formed roots and flat crests) shall be not less than L_2 (effective length of external thread) required by ASME B1.20.1, Pipe Threads, General Purpose (Inch).

Copyright ASME International
Provided by IHS under license with ASME
No reproduction or networking permitted without license from IHS
Not for Resale

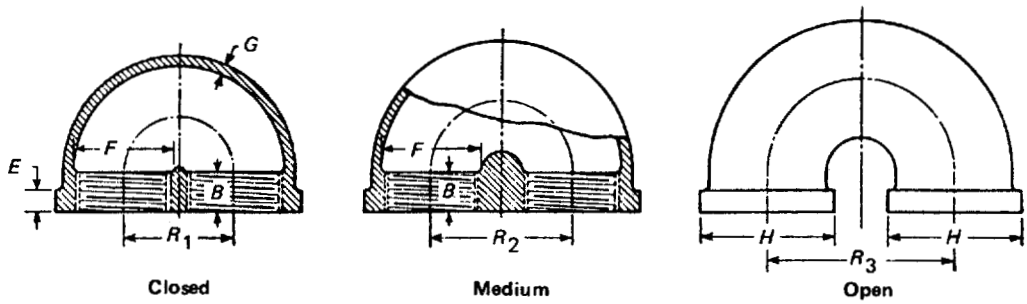

TABLE 10 DIMENSIONS OF CLASS 150, CLOSED-, MEDIUM-, AND OPEN-PATTERN RETURN BENDS

Nominal Pipe Size	Length of Thread, Min., *B*	Width of Band, Min., *E*	Inside Diameter of Fittings, *F*		Metal Thickness, *G*	Outside Diameter of Band, Min., *H*	Center-to-Center (Closed Pattern), R_1	Center-to-Center (Medium Pattern), R_2	Center-to-Center (Open Pattern), R_3
			Min.	Max.					
1/2	0.43	0.25	0.84	0.90	0.12	1.20	1.00	1.25	1.50
3/4	0.50	0.27	1.05	1.11	0.13	1.46	1.25	1.50	2.00
1	0.58	0.30	1.31	1.38	0.15	1.77	1.50	1.87	2.50
1 1/4	0.67	0.34	1.66	1.73	0.16	2.15	1.75	2.25	3.00
1 1/2	0.70	0.37	1.90	1.97	0.18	2.43	2.19	2.50	3.50
2	0.75	0.42	2.37	2.44	0.20	2.96	2.62	3.00	4.00
2 1/2	0.92	0.48	2.87	2.97	0.24	3.59	...	...	4.50
3	0.98	0.55	3.50	3.60	0.27	4.28	...	...	5.00
4	1.08	0.66	4.50	4.60	0.31	5.40	...	...	6.00

GENERAL NOTES:
(a) Dimensions are in inches.
(b) It is permissible to furnish closed-pattern return bends not banded. Closed-pattern return bends will not make up equally spaced coils, as the distance center-to-center of two adjacent bends is greater than the center-to-center of openings of a single bend.

Copyright ASME International
Provided by IHS under license with ASME
No reproduction or networking permitted without license from IHS
Not for Resale

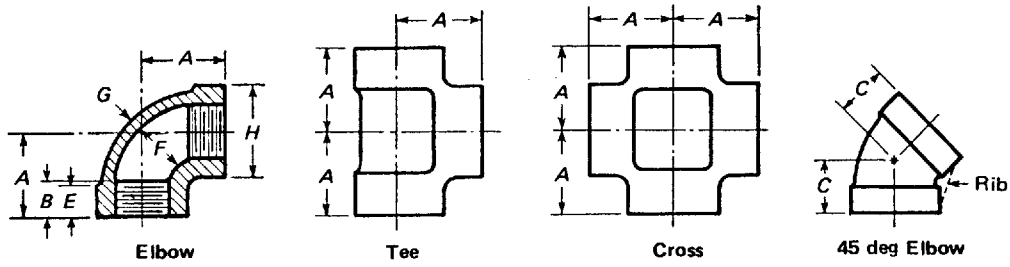

TABLE 11 DIMENSIONS OF CLASS 300, 90 deg ELBOWS, TEES, AND CROSSES, AND 45 deg ELBOWS (STRAIGHT SIZES)

Nominal Pipe Size	Center-to-End, Elbows, Tees, and Crosses, *A*	Center-to-End, 45 deg Elbows, *C*	Length of Thread, Min., *B*	Width of Band, Min., *E*	Inside Diameter of Fitting, *F*		Metal Thickness, *G*	Outside Diameter of Band, Min., *H*
					Min.	Max.		
1/4	0.94	0.81	0.43	0.38	0.54	0.58	0.14	0.93
3/8	1.06	0.88	0.47	0.44	0.67	0.72	0.15	1.12
1/2	1.25	1.00	0.57	0.50	0.84	0.90	0.16	1.34
3/4	1.44	1.13	0.64	0.56	1.05	1.11	0.18	1.63
1	1.63	1.31	0.75	0.62	1.31	1.38	0.20	1.95
1 1/4	1.94	1.50	0.84	0.69	1.66	1.73	0.22	2.39
1 1/2	2.13	1.69	0.87	0.75	1.90	1.97	0.24	2.68
2	2.50	2.00	1.00	0.84	2.37	2.44	0.26	3.28
2 1/2	2.94	2.25	1.17	0.94	2.87	2.97	0.31	3.86
3	3.38	2.50	1.23	1.00	3.50	3.60	0.35	4.62

GENERAL NOTE: Dimensions are in inches.

Copyright ASME International
Provided by IHS under license with ASME
No reproduction or networking permitted without license from IHS
Not for Resale

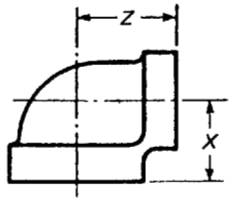

TABLE 12 CENTER-TO-END DIMENSIONS OF CLASS 300, 90 deg ELBOWS (REDUCING SIZES)

Nominal Pipe Size	Center-to-End	
	X	Z
1/2 × 3/8	1.19	1.19
3/4 × 1/2	1.31	1.38
1 × 3/4	1.50	1.56
1 1/4 × 1	1.75	1.81
1 1/2 × 1 1/4	2.00	2.06
2 × 1 1/2	2.25	2.38
2 1/2 × 2	2.69	2.75
3 × 2 1/2	3.06	3.31

GENERAL NOTES:
(a) Dimensions are in inches.
(b) For dimensions not given, see Table 11.
(c) Reducing sizes of fittings for which dimensions are not given in tables may be produced from regular patterns for listed sizes by sand bushing.

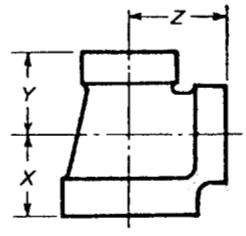

TABLE 13 CENTER-TO-END DIMENSIONS OF CLASS 300 TEES (REDUCING SIZES)

Nominal Pipe Size	Center-to-End		
	X	Y	Z
1/2 × 1/2 × 3/8	1.19	1.19	1.19
1/2 × 3/8 × 1/2	1.25	1.19	1.25
3/4 × 3/4 × 1/2	1.31	1.31	1.38
3/4 × 1/2 × 3/4	1.44	1.38	1.44
1 × 1 × 3/4	1.50	1.50	1.56
1 × 1 × 1/2	1.44	1.44	1.50
1 × 1 × 3/8	1.31	1.31	1.44
1 × 3/4 × 1	1.63	1.56	1.63
1 1/4 × 1 1/4 × 1	1.75	1.75	1.81
1 1/4 × 1 1/4 × 3/4	1.63	1.63	1.75
1 1/4 × 1 1/4 × 1/2	1.50	1.50	1.69
1 1/4 × 1 × 1 1/4	1.94	1.81	1.94
1 1/2 × 1 1/2 × 1 1/4	2.00	2.00	2.06
1 1/2 × 1 1/2 × 1	1.81	1.81	2.00
1 1/2 × 1 1/2 × 3/4	1.69	1.69	1.88
1 1/2 × 1 1/2 × 1/2	1.63	1.63	1.81
1 1/2 × 1 1/4 × 1 1/2	2.13	2.06	2.13
2 × 2 × 1 1/2	2.25	2.25	2.38
2 × 2 × 1 1/4	2.13	2.13	2.31
2 × 2 × 1	2.00	2.00	2.25
2 × 2 × 3/4	1.81	1.81	2.13
2 × 2 × 1/2	1.75	1.75	2.06
2 × 1 1/2 × 2	2.50	2.38	2.50
2 1/2 × 2 1/2 × 2	2.69	2.69	2.75
2 1/2 × 2 1/2 × 1 1/2	2.44	2.44	2.63
2 1/2 × 2 × 2 1/2	2.94	2.75	2.94
3 × 3 × 2 1/2	3.06	3.06	3.31
3 × 3 × 2	2.81	2.81	3.13
3 × 2 1/2 × 3	3.38	3.31	3.38

GENERAL NOTES:
(a) Dimensions are in inches.
(b) For dimensions not given, see Table 11.
(c) Reducing sizes of fittings for which dimensions are not given in tables may be produced from regular patterns for listed sizes by sand bushing.

Copyright ASME International
Provided by IHS under license with ASME
No reproduction or networking permitted without license from IHS
Not for Resale

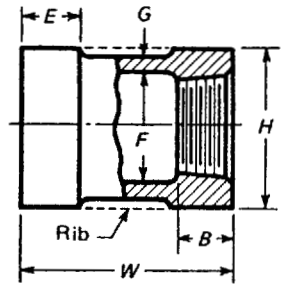

Couplings With Bands

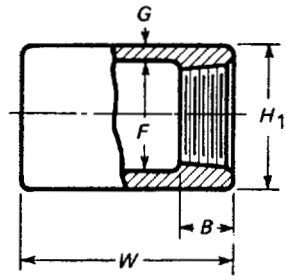

Couplings Without Bands

TABLE 14 DIMENSIONS OF CLASS 300 COUPLINGS

Nominal Pipe Size	Length of Thread, Min., *B*	Width of Band, Min., *E*	Inside Diameter of Fitting, *F*		Metal Thickness, *G*	Outside Diameter of Coupling, Min., H_1 [Note (1)]	Outside Diameter of Band, Min., *H* [Note (2)]	Length of Straight Coupling, *W*
			Min.	Max.				
1/4	0.43	0.38	0.54	0.58	0.14	0.82	0.93	1.37
3/8	0.47	0.44	0.67	0.72	0.15	0.97	1.12	1.62
1/2	0.57	0.50	0.84	0.90	0.16	1.16	1.34	1.87
3/4	0.64	0.56	1.05	1.11	0.18	1.41	1.63	2.12
1	0.75	0.62	1.31	1.38	0.20	1.71	1.95	2.37
1 1/4	0.84	0.69	1.66	1.73	0.22	2.10	2.39	2.87
1 1/2	0.87	0.75	1.90	1.97	0.24	2.38	2.68	2.87
2	1.00	0.84	2.37	2.44	0.26	2.89	3.28	3.62
2 1/2	1.17	0.94	2.87	2.97	0.31	3.49	3.86	4.12
3	1.23	1.00	3.50	3.60	0.35	4.20	4.62	4.12

GENERAL NOTE: Dimensions are in inches.

NOTES:

(1) H_1 diameter is standard for couplings without bands; $H_1 = F$ min. + $2G$.

(2) *H* min. is for couplings with bands and is optional with the manufacturer. For information on ribs, see Section 8.

Copyright ASME International
Provided by IHS under license with ASME
No reproduction or networking permitted without license from IHS Not for Resale

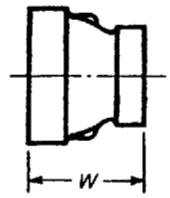

TABLE 15 DIMENSIONS OF CLASS 300 REDUCING COUPLINGS

Nominal Pipe Size	Length, *W*
3/8 × 1/4	1.44
1/2 × 3/8	1.69
1/2 × 1/4	1.69
3/4 × 1/2	1.75
3/4 × 3/8	1.75
3/4 × 1/4	1.75
1 × 3/4	2.00
1 × 1/2	2.00
1 × 3/8	2.00
1 × 1/4	2.00
1 1/4 × 1	2.38
1 1/4 × 3/4	2.38
1 1/4 × 1/2	2.38
1 1/2 × 1 1/4	2.69
1 1/2 × 1	2.69
1 1/2 × 3/4	2.69
1 1/2 × 1/2	2.69
2 × 1 1/2	3.19
2 × 1 1/4	3.19
2 × 1	3.19
2 × 3/4	3.19
2 × 1/2	3.19
2 1/2 × 2	3.69
2 1/2 × 1 1/2	3.69
3 × 2 1/2	4.06
3 × 2	4.06
3 × 1 1/2	4.06

GENERAL NOTES:
(a) Dimensions are in inches.
(b) For dimensions not given, see Table 11.
(c) Reducing sizes of fittings for which dimensions are not given in the tables may be produced from regular patterns for listed sizes by sand bushing.

Copyright ASME International
Provided by IHS under license with ASME
No reproduction or networking permitted without license from IHS
Not for Resale

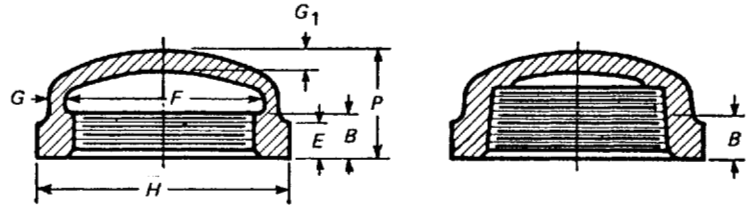

Caps With Recess Caps Without Recess

TABLE 16 DIMENSIONS OF CLASS 300 CAPS

Nominal Pipe Size	Length of Thread, Min., *B*	Width of Band, Min., *E*	Inside Diameter of Fitting, *F*		Metal Thickness		Outside Diameter of Band, Min., *H*	Height, Min., *P* [Note (2)]
			Min.	Max.	Min., *G*	Recommended, G_1 [Note (1)]		
1/4	0.43	0.38	0.54	0.58	0.14	0.18	0.93	0.78
3/8	0.47	0.44	0.67	0.72	0.15	0.19	1.12	0.83
1/2	0.57	0.50	0.84	0.90	0.16	0.20	1.34	0.98
3/4	0.64	0.56	1.05	1.11	0.18	0.23	1.63	1.08
1	0.75	0.62	1.31	1.38	0.20	0.25	1.95	1.26
1 1/4	0.84	0.69	1.66	1.73	0.22	0.28	2.39	1.38
1 1/2	0.87	0.75	1.90	1.97	0.24	0.30	2.68	1.43
2	1.00	0.84	2.37	2.44	0.26	0.33	3.28	1.68
2 1/2	1.17	0.94	2.87	2.97	0.31	0.39	3.86	2.06
3	1.23	1.00	3.50	3.60	0.35	0.44	4.62	2.17

GENERAL NOTE: Dimensions are in inches.

NOTES:
(1) Dimension G_1 is recommended but shall in no case be less than dimension *G*.
(2) Dimension *P* may be varied to comply with manufacturer's practice, and, for caps without recess, shall be of such height that the length of effective thread shall be not less than *B*.

Copyright ASME International
Provided by IHS under license with ASME
No reproduction or networking permitted without license from IHS
Not for Resale

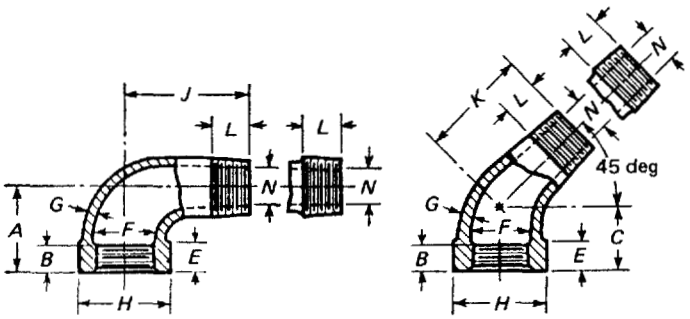

TABLE 17 DIMENSIONS OF CLASS 300, 90 deg AND 45 deg STREET ELBOWS

Nominal Pipe Size	90 deg Elbows		45 deg Elbows		Length of Thread, Min., *B*	Width of Band, Min., *E*	Inside Diameter of Fitting, *F*		Metal Thickness, *G*	Outside Diameter of Band, Min., *H*	Length of External Thread, Min., *L*	Max. Port Diameter Male End, *N*
	Center-to-End, *A*	Center-to-Male End, *J*	Center-to-End, *C*	Center-to-Male End, *K*			Min.	Max.				
1/4	0.94	1.44	...	...	0.43	0.38	0.54	0.58	0.14	0.93	0.40	0.26
3/8	1.06	1.63	...	...	0.47	0.44	0.67	0.72	0.15	1.12	0.41	0.36
1/2	1.25	2.00	1.00	1.38	0.57	0.50	0.84	0.90	0.16	1.34	0.53	0.49
3/4	1.44	2.19	1.13	1.56	0.64	0.56	1.05	1.11	0.18	1.63	0.55	0.67
1	1.63	2.56	1.31	1.81	0.75	0.62	1.31	1.38	0.20	1.95	0.68	0.88
1 1/4	1.94	2.88	1.50	2.13	0.84	0.69	1.66	1.73	0.22	2.39	0.71	1.16
1 1/2	2.13	3.13	1.69	2.31	0.87	0.75	1.90	1.97	0.24	2.68	0.72	1.35
2	2.50	3.69	2.00	2.69	1.00	0.84	2.37	2.44	0.26	3.28	0.76	1.75
2 1/2	2.94	4.50	...	...	1.17	0.94	2.87	2.97	0.31	3.86	1.14	2.16
3	3.38	5.13	...	...	1.23	1.00	3.50	3.60	0.35	4.62	1.20	2.67

GENERAL NOTE: Dimensions are in inches.

Copyright ASME International
Provided by IHS under license with ASME
No reproduction or networking permitted without license from IHS
Not for Resale

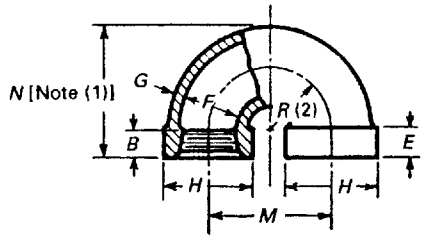

NOTES:
(1) Dimension *N* may be varied to comply with manufacturer's practice.
(2) It is recommended that the distance from the end of the fitting to the center of the radius *R* be approximately equal to the dimension *B*; radius *R* is recommended as being one-half of dimension *M*.

TABLE 18 DIMENSIONS OF CLASS 300 RETURN BENDS

Nominal Pipe Size	Center-to-Center, *M*			Length of Thread, Min., *B*	Width of Band, Min., *E*	Inside Diameter of Fitting, *F*		Metal Thickness, *G* [Note (1)]	Outside Diameter of Band, Min., *H*
	Closed Pattern	Medium Pattern	Open Pattern			Min.	Max.		
1	1.75	2.50	3.00	0.75	0.62	1.31	1.38	0.20	1.95
1¼	2.25	2.50	3.00	0.84	0.69	1.66	1.73	0.22	2.39
1½	3.00	3.50	6.00	0.87	0.75	1.90	1.97	0.24	2.68
2	4.00	6.00	8.00	1.00	0.84	2.37	2.44	0.26	3.28

GENERAL NOTE: Dimensions are in inches.
NOTE:
(1) It is recommended that *G* for return bends be increased by 10% or more.

Copyright ASME International
Provided by IHS under license with ASME
No reproduction or networking permitted without license from IHS
Not for Resale

STD.ASME B16.3-ENGL 1998 ■ 0759670 0612728 609 ■

MANDATORY ANNEX I
REFERENCES

The following is a list of publications referenced in this Standard.

ASME B1.20.1-1983 (R1992), Pipe Threads, General Purpose (Inch)[1]

ASME B16.14-1991, Ferrous Pipe Plugs, Bushings, and Locknuts With Pipe Threads[1]

Publisher: American Society of Mechanical Engineers (ASME), Three Park Avenue, New York, NY 10016-5990; Order Department: 22 Law Drive, Box 2300, Fairfield, NJ 07007-2300

ASTM A 153/A 153M-95, Specification for Zinc Coating (Hot-Dip) on Iron and Steel Hardware

ASTM A 197-87 (R1992), Specification for Cupola Malleable Iron

ASTM B 633-85 (R1994), Specification for Electrodeposited Coatings of Zinc on Iron and Steel

ASTM B 766-86 (R1993), Specification for Electrodeposited Coatings of Cadmium

Publisher: American Society for Testing and Materials (ASTM), 100 Barr Harbor Drive, West Conshohocken, PA 19428

[1] May also be obtained from American National Standards Institute (ANSI), 11 West 42nd Street, New York, NY 10036.

ISO 9000-1: 1994, Quality management and quality assurance standards, Part 1: Guidelines for selection and use

ISO 9000-2: 1997, Quality management and quality assurance standards, Part 2: Generic guidelines for the application of ISO 9001, ISO 9002, and ISO 9003

ISO 9000-3: 1991, Quality management and quality assurance standards, Part 3: Guidelines for the application of ISO 9001 to the development, supply, and maintenance of software

ISO 9001: 1994, Quality systems: Model for quality assurance in design, development, production, installation, and servicing

ISO 9002: 1994, Quality systems: Model for quality assurance in production and servicing

ISO 9003: 1994, Quality systems: Model for quality assurance in final inspection and test

Publisher: International Organization for Standardization (ISO), 1 rue de Varembé, Case Postale 56, CH-1121, Genève 20, Switzerland/Suisse

MSS SP-25-1998, Standard Practice Marking System for Valves, Fittings, Flanges, and Unions

Publisher: Manufacturers Standardization Society of the Valve and Fittings Industry (MSS), 127 Park Street, NE, Vienna, VA 22180

Copyright ASME International
Provided by IHS under license with ASME
No reproduction or networking permitted without license from IHS
Not for Resale

NONMANDATORY ANNEX A
QUALITY SYSTEM PROGRAM

The products manufactured in accordance with this Standard shall be produced under a quality system program following the principles of an appropriate standard from the ISO 9000 series.[1] A determination of the need for registration and/or certification of the product manufacturer's quality system program by an independent organization shall be the responsibility of the manufacturer. The detailed documentation demonstrating program compliance shall be available to the purchaser at the manufacturer's facility. A written summary description of the program utilized by the product manufacturer shall be available to the purchaser upon request. The product manufacturer is defined as the entity whose name or trademark appears on the product in accordance with the marking or identification requirements of this Standard.

---

[1] The series is also available from the American National Standards Institute (ANSI) and the American Society for Quality (ASQ) as American National Standards that are identified by a prefix "Q" in place of the prefix "ISO." Each standard of the series is listed under Annex I.

Copyright ASME International
Provided by IHS under license with ASME
No reproduction or networking permitted without license from IHS
Not for Resale

AMERICAN NATIONAL STANDARDS FOR PIPING, PIPE FLANGES, FITTINGS, AND VALVES

Scheme for the Identification of Piping Systems A13.1-1996
Pipe Threads, General Purpose (Inch) ..... B1.20.1-1983(R1992)
Dryseal Pipe Threads (Inch) ..... B1.20.3-1976(R1991)
Cast Iron Pipe Flanges and Flanged Fittings: Classes 25, 125, and 250 ..... B16.1-1998
Malleable Iron Threaded Fittings: Classes 150 and 300 ..... B16.3-1998
Gray Iron Threaded Fittings: Classes 125 and 250 ..... B16.4-1998
Pipe Flanges and Flanged Fittings (NPS ½ Through NPS 24) B16.5-1996
Factory-Made Wrought Steel Buttwelding Fittings B16.9-1993
Face-to-Face and End-to-End Dimensions of Valves B16.10-1992
Forged Fittings, Socket-Welding and Threaded B16.11-1996
Cast Iron Threaded Drainage Fittings B16.12-1998
Ferrous Pipe Plugs, Bushings, and Locknuts with Pipe Threads B16.14-1991
Cast Bronze Threaded Fittings: Classes 125 and 250 ..... B16.15-1985(R1994)
Cast Copper Alloy Solder Joint Pressure Fittings ..... B16.18-1984(R1994)
Metallic Gaskets for Pipe Flanges: Ring-Joint, Spiral-Wound, and Jacketed B16.20-1998
Nonmetallic Flat Gaskets for Pipe Flanges B16.21-1992
Wrought Copper and Copper Alloy Solder Joint Pressure Fittings B16.22-1995
Cast Copper Alloy Solder Joint Drainage Fittings — DWV B16.23-1992
Cast Copper Alloy Pipe Flanges and Flanged Fittings: Classes 150, 300, 400, 600, 900, 1500, and 2500 ..... B16.24-1991(R1998)
Buttwelding Ends B16.25-1997
Cast Copper Alloy Fittings for Flared Copper Tubes B16.26-1988
Wrought Steel Buttwelding Short Radius Elbows and Returns B16.28-1994
Wrought Copper and Wrought Copper Alloy Solder Joint Drainage Fittings — DWV B16.29-1994
Manually Operated Metallic Gas Valves for Use in Gas Piping Systems up to 125 psig (Sizes ½ Through 2) B16.33-1990
Valves — Flanged, Threaded, and Welding End B16.34-1996
Orifice Flanges B16.36-1996
Large Metallic Valves for Gas Distribution (Manually Operated, NPS 2½ to 12, 125 psig Maximum) ..... B16.38-1985(R1994)
Malleable Iron Threaded Pipe Unions B16.39-1998
Manually Operated Thermoplastic Gas Shutoffs and Valves in Gas Distribution Systems ..... B16.40-1985(R1994)
Ductile Iron Pipe Flanges and Flanged Fittings, Classes 150 and 300 ..... B16.42-1998
Manually Operated Metallic Gas Valves for Use in House Piping Systems B16.44-1995
Cast Iron Fittings for Sovent® Drainage Systems B16.45-1998
Large Diameter Steel Flanges (NPS 26 Through NPS 60) B16.47-1996
Steel Line Blanks B16.48-1997
Power Piping B31.1-1995
Fuel Gas Piping (not an ANSI standard) B31.2-1968
Process Piping B31.3-1999
Pipeline Transportation Systems for Liquid Hydrocarbons and Other Liquids B31.4-1992
Refrigeration Piping B31.5-1992
Gas Transmission and Distribution Piping Systems B31.8-1995
Building Services Piping B31.9-1996
Slurry Transportation Piping Systems B31.11-1989
Manual for Determining the Remaining Strength of Corroded Pipelines B31G-1991
Welded and Seamless Wrought Steel Pipe B36.10M-1996
Stainless Steel Pipe ..... B36.19M-1985(R1994)
Self-Operated and Power-Operated Safety-Related Valves Functional Specification Standard ..... N278.1-1975(R1992)

The ASME Publications Catalog shows a complete list of all the Standards published by the Society. For a complimentary catalog, or the latest information about our publications, call 1-800-THE-ASME (1-800-843-2763).

Copyright ASME International
Provided by IHS under license with ASME
No reproduction or networking permitted without license from IHS
Not for Resale

ASME Services

ASME is committed to developing and delivering technical information. At ASME's Information Central, we make every effort to answer your questions and expedite your orders. Our representatives are ready to assist you in the following areas:

ASME Press
Codes & Standards
Credit Card Orders
IMechE Publications
Meetings & Conferences
Member Dues Status
Member Services & Benefits
Other ASME Programs
Payment Inquiries
Professional Development
Short Courses
Publications
Public Information
Self-Study Courses
Shipping Information
Subscriptions/Journals/Magazines
Symposia Volumes
Technical Papers

How can you reach us? It's easier than ever!

There are four options for making inquiries* or placing orders. Simply mail, phone, fax, or E-mail us and an Information Central representative will handle your request.

Mail
ASME
22 Law Drive, Box 2900
Fairfield, New Jersey
07007-2900

Call Toll Free
US & Canada: 800-THE-ASME
(800-843-2763)
Mexico: 95-800-THE-ASME
(95-800-843-2763)
Universal: 973-882-1167

Fax-24 hours
973-882-1717
973-882-5155

E-Mail-24 hours
Infocentral
@asme.org

* Information Central staff are not permitted to answer inquiries about the technical content of this code or standard. Information as to whether or not technical inquiries are issued to this code or standard is shown on the copyright page. All technical inquiries must be submitted in writing to the staff secretary. Additional procedures for inquiries may be listed within.

Copyright ASME International
Provided by IHS under license with ASME
No reproduction or networking permitted without license from IHS
Not for Resale