ASME B16.29-2001
(Revision of ASME B16.29-1994)

WROUGHT COPPER AND WROUGHT COPPER ALLOY SOLDER JOINT DRAINAGE FITTINGS — DWV

AN AMERICAN NATIONAL STANDARD



The American Society of Mechanical Engineers

Copyright ASME International
Provided by IHS under license with ASME
No reproduction or networking permitted without license from IHS

Not for Resale

The American Society of Mechanical Engineers

AN AMERICAN NATIONAL STANDARD

WROUGHT COPPER AND WROUGHT COPPER ALLOY SOLDER JOINT DRAINAGE FITTINGS — DWV

ASME B16.29-2001

(Revision of ASME B16.29-1994)

--`,,`-`-`,,`,,`,`,,`---

Copyright ASME International
Provided by IHS under license with ASME
No reproduction or networking permitted without license from IHS

Not for Resale

Date of Issuance: April 1, 2002

The 2001 edition of this Standard is being issued with an automatic addenda subscription service. The use of addenda allows revisions made in response to public review comments or committee actions to be published on a regular yearly basis; revisions published in addenda will become effective 1 year after the Date of Issuance of the addenda. The next edition of this Standard is scheduled for publication in 2006.

ASME issues written replies to inquiries concerning interpretations of technical aspects of this Standard. The interpretations will be included with the above addenda service.

ASME is the registered trademark of The American Society of Mechanical Engineers.

This code or standard was developed under procedures accredited as meeting the criteria for American National Standards. The Standards Committee that approved the code or standard was balanced to assure that individuals from competent and concerned interests have had an opportunity to participate. The proposed code or standard was made available for public review and comment that provides an opportunity for additional public input from industry, academia, regulatory agencies, and the public-at-large.

ASME does not "approve," "rate," or "endorse" any item, construction, proprietary device, or activity.

ASME does not take any position with respect to the validity of any patent rights asserted in connection with any items mentioned in this document, and does not undertake to insure anyone utilizing a standard against liability for infringement of any applicable letters patent, nor assume any such liability. Users of a code or standard are expressly advised that determination of the validity of any such patent rights, and the risk of infringement of such rights, is entirely their own responsibility.

Participation by federal agency representative(s) or person(s) affiliated with industry is not to be interpreted as government or industry endorsement of this code or standard.

ASME accepts responsibility for only those interpretations of this document issued in accordance with the established ASME procedures and policies, which precludes the issuance of interpretations by individuals.

No part of this document may be reproduced in any form,
in an electronic retrieval system or otherwise,
without the prior written permission of the publisher.

The American Society of Mechanical Engineers
Three Park Avenue, New York, NY 10016-5990

Copyright © 2002 by
THE AMERICAN SOCIETY OF MECHANICAL ENGINEERS
All Rights Reserved
Printed in U.S.A.

Copyright ASME International
Provided by IHS under license with ASME
No reproduction or networking permitted without license from IHS

Not for Resale

CONTENTS

Foreword v
Committee Roster vi
Correspondence with the B16 Committee vii

1 Scope 1
1.1 General 1
1.2 Units of Measurement 1
1.3 Quality Systems 1

2 Description 1

3 Pitch (Slope) 1

4 Abbreviations 1

5 Size 1

6 Marking 2

7 Material 2

8 Laying Lengths 2

9 Ovality 2

10 Threaded Ends 2
10.1 General 2
10.2 Chamfer 2
10.3 Threading Tolerances 2

11 Design of Threaded Ends 2

12 Alignment 2

13 Gaging 2
13.1 Standard Gaging Method of Solder Joint Ends 2
13.2 Optional Gaging Method of Solder Joint Ends 2

Figure
1 Size of Fittings 1

Tables
1 Symbol Definitions 1
2 Dimensions of Solder Joint Ends 3
3 Dimensions of Threaded Ends — DWV 4

Copyright ASME International
Provided by IHS under license with ASME
No reproduction or networking permitted without license from IHS
Not for Resale

4 Dimensions of DWV Couplings, Extended Bushings, and Adapters 5
5 Dimensions of DWV Soil Pipe Adapters 6
6 Dimensions of DWV C X No-Hub Soil Pipe Adapter 7
7 Dimensions of DWV Elbows 8
8 Dimensions of DWV 45 deg Y's 9
9 Dimensions of DWV Tees 10
10 Dimensions of DWV Caps 11
11 Dimensions of DWV Vent Increasers 11
12 Dimensions of DWV Closet Flanges 12
13 Dimensions of DWV Trap Adapters 13
14 Dimensions of DWV Slip Joint Ends 13

Nonmandatory Appendixes

A References 15
B Quality System Program 16

Copyright ASME International
Provided by IHS under license with ASME
No reproduction or networking permitted without license from IHS
Not for Resale

FOREWORD

Standardization of cast and wrought solder joint fittings was initiated in Subcommittee 11 of American Standards Association (ASA) Sectional Committee A40 on Plumbing Requirements and Equipment. Development work culminated in publication of ASA A40.3-1941.

In 1949, work on these fittings was transferred to Sectional Committee B16 of ASA, which established Subcommittee 9 (now Subcommittee J). The first standard developed was approved as ASA B16.18-1950, Cast Bronze Solder-Joint Fittings. A later joint effort of the Copper and Brass Research Association and the Manufacturers Standardization Society of the Valve and Fittings Industry (MSS) culminated in a standard on wrought fittings, ultimately approved as B16.22-1951.

Concurrently, recognizing the need for drainage fitting standards, an MSS task group developed the standard later approved as ASA B16.23-1953, Cast Bronze Solder-Joint Drainage Fittings, and a standard for wrought fittings was initially published as MSS SP-64-1961. A revision of that standard was submitted to Subcommittee 9 of B16 and was eventually approved as ASA B16.29-1966.

A revision was published [after reorganization of ASA as the American National Standards Institute (ANSI)] as ANSI B16.29-1973. In this edition, shorter solder cups were specified in larger sizes, since strength to contain pressure is not a factor. In 1979, Subcommittee I (formerly 9, now J) added metric dimensional equivalents and made other minor improvements. That revision was approved by ANSI, after approval by the Committee and secretariat organizations, as ANSI B16.29-1980.

In 1982, American National Standards Committee B16 was reorganized as an ASME Committee operating under procedures accredited by ANSI. The 1986 edition of the Standard removed metric equivalents (not functionally applicable in the plumbing industry), updated the referenced standards, and incorporated editorial and format revisions. The 1994 edition removed inspection tolerance requirements, established minimum laying lengths, added soil pipe adapters, and incorporated editorial revisions. Following approval by the Standards Committee and ASME, approval as an American National Standard was given by ANSI on October 10, 1994, with the designator ASME B16.29-1994.

The 2001 Edition of this Standard was revised to include Nonmandatory Appendix B, Quality System Program. Editorial revisions were made for the purpose of clarification. Following approval by the B16 Main Committee and ASME Supervisory Board, this Standard was approved as an American National Standard by ANSI on October 11, 2001.

Requests for interpretation or suggestions for revision should be sent to the Secretary, B16 Committee, The American Society of Mechanical Engineers, Three Park Avenue, New York, New York 10016-5990.

--`,`-`-`,,`,,`,`,,`---

Copyright ASME International
Provided by IHS under license with ASME
No reproduction or networking permitted without license from IHS
Not for Resale

ASME B16 COMMITTEE
Standardization of Valves, Flanges, Fittings, Gaskets, and Valve Actuators

(The following is the roster of the Committee at the time of approval of this Standard.)

OFFICERS

H. R. Sonderegger, *Chair*
M. L. Nayyar, *Vice Chair*
P. A. Reddington, *Secretary*

COMMITTEE PERSONNEL

R. W. Barnes, Anric Enterprises
R. R. Brodin, Fisher Controls International, Inc.
M. A. Clark, Nibco, Inc.
A. Cohen, Arthur Cohen and Associates
C. E. Floren, Mueller Co.
D. R. Frikken, Solutia, Inc.
G. A. Jolly, Vogt Valve Co.
W. G. Knecht, BW/IP International, Inc.,
R. Koester, The William Powell Co.
W. N. McLean, Newco Valves
M. L. Nayyar, Bechtel Power Corp.
P. A. Reddington, The American Society of Mechanical Engineers
R. A. Schmidt, Trinity-Ladish Co.
H. R. Sonderegger, Grinnel Corp.
W. M. Stephan, Flexitallic, Inc.
T. F. Stroud, Ductile Iron Pipe Research Association
R. E. White, Richard E. White and Associates
D. A. Williams, Southern Company Services
L. A. Willis, The Dow Chemical Co.
W. R. Worley, Union Carbide Corp.

SUBCOMMITTEE J — COPPER AND COPPER ALLOY FLANGES

M. A. Clark, *Chair,* Nibco, Inc.
D. F. Buccicone, Elkhart Production Corp.
A. Cohen, Arthur Cohen and Associates
D. R. Frikken, Solutia, Inc.
T. L. Jamison, Mueller Industries
A. G. Kireta, Jr., Copper Development, Inc.
A. A. Knapp, Canadian Copper/Brass
L. McDaniel, Mueller Copper Fittings, LP
G. Moino, The American Society of Mechanical Engineers

Copyright ASME International
Provided by IHS under license with ASME
No reproduction or networking permitted without license from IHS
Not for Resale

CORRESPONDENCE WITH THE B16 COMMITTEE

General. ASME Standards are developed and maintained with the intent to represent the consensus of concerned interests. As such, users of this Standard may interact with the Committee by requesting interpretations, proposing revisions, and attending Committee meetings. Correspondence should be addressed to:

Secretary, B16 Main Committee
The American Society of Mechanical Engineers
Three Park Avenue
New York, NY 10016-5990

Proposing Revisions. Revisions are made periodically to the Standard to incorporate changes that appear necessary or desirable, as demonstrated by the experience gained from the application of the Standard. Approved revisions will be published periodically.

The Committee welcomes proposals for revisions to this Standard. Such proposals should be as specific as possible, citing the paragraph number(s), the proposed wording, and a detailed description of the reasons for the proposal, including any pertinent documentation.

Interpretations. Upon request, the B16 Committee will render an interpretation of any requirement of the Standard. Interpretations can only be rendered in response to a written request sent to the Secretary of the B16 Main Committee.

The request for interpretation should be clear and unambiguous. It is further recommended that the inquirer submit his/her request in the following format:

Subject: Cite the applicable paragraph number(s) and the topic of the inquiry.

Edition: Cite the applicable edition of the Standard for which the interpretation is being requested.

Question: Phrase the question as a request for an interpretation of a specific requirement suitable for general understanding and use, not as a request for an approval of a proprietary design or situation. The inquirer may also include any plans or drawings, which are necessary to explain the question; however, they should not contain proprietary names or information.

Requests that are not in this format will be rewritten in this format by the Committee prior to being answered, which may inadvertently change the intent of the original request.

ASME procedures provide for reconsideration of any interpretation when or if additional information that might affect an interpretation is available. Further, persons aggrieved by an interpretation may appeal to the cognizant ASME Committee or Subcommittee. ASME does not "approve," "certify," "rate," or "endorse" any item, construction, proprietary device, or activity.

Attending Committee Meetings. The B16 Main Committee regularly holds meetings, which are open to the public. Persons wishing to attend any meeting should contact the Secretary of the B16 Main Committee.

Copyright ASME International
Provided by IHS under license with ASME
No reproduction or networking permitted without license from IHS
Not for Resale

--`,`-`-`,,`,,`,`,,`---

Copyright ASME International
Provided by IHS under license with ASME
No reproduction or networking permitted without license from IHS

Not for Resale

WROUGHT COPPER AND WROUGHT COPPER ALLOY SOLDER JOINT DRAINAGE FITTINGS — DWV

1 SCOPE

1.1 General

This Standard for wrought copper and wrought copper alloy solder joint drainage fittings, designed for use with copper drainage tube, covers:

(a) description
(b) pitch (slope)
(c) abbreviations for end connections
(d) sizes, and method of designating openings for reducing fittings
(e) marking
(f) material
(g) dimensions and tolerances

1.2 Units of Measurement

U.S. customary units are the standard. For conversion to metric SI units, see SI-1, ASME Orientation and Guide for Use of SI (Metric) Units.

1.3 Quality Systems

Requirements relating to the product manufacturer's Quality System Programs are described in Nonmandatory Appendix B.

2 DESCRIPTION

These fittings are designed for drainage and vent systems only, using the solder joint method of connection. The fitting cups (C) are provided with stops so that the ends of the tube, when assembled, meet the stops. Sketches and designs of fittings are illustrative only. The dimensions specified herein shall govern in all cases.

3 PITCH (SLOPE)

All nominal 90 deg fittings shall be pitched to result in a slope of 0.25 in./ft (2%) of length of horizontal tube with reference to a horizontal plane.

TABLE 1 SYMBOL DEFINITIONS

C	Solder joint fitting end (female) made to receive copper tube diameter
FTG	Solder joint fitting end (male) made to copper tube diameter
F	Internal American National Standard taper pipe thread (female) NPTI
M	External American National Standard taper pipe thread (male) NPTE
SJ	End of fitting formed to receive outside diameter tube size
NPSM	American National Standard straight mechanical pipe thread

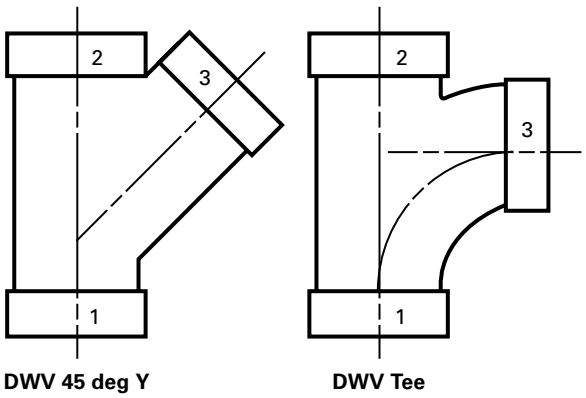

FIG. 1 SIZE OF FITTINGS

4 ABBREVIATIONS

The symbols in Table 1 are used to designate the type of fitting end.

5 SIZE

(a) The size of the fittings scheduled in the following tables is identified by the corresponding drainage tube size as shown in ASTM B 306. The size of the threaded ends (except slip joints) corresponds to nominal pipe size.

(b) Fittings are designated by the size of the openings in the sequence illustrated in Fig. 1. The size of the

Copyright ASME International
Provided by IHS under license with ASME
No reproduction or networking permitted without license from IHS
Not for Resale

threaded ends will be identified by the corresponding nominal pipe size.

6 MARKING

Each fitting shall be marked permanently and legibly with the manufacturer's name or trademark and with DWV (to indicate drain-waste-vent).

7 MATERIAL

Fittings shall be made of wrought copper or wrought copper alloy material having not less than an 84% copper content.

8 LAYING LENGTHS

Due to widely varying manufacturing processes, laying length dimensions of fittings are not standardized. Consult the manufacturer for these dimensions.

9 OVALITY

Maximum ovality shall not exceed 1% of the maximum diameter shown in Table 2. The average of the maximum and minimum diameters must be within the dimensions shown in the table.

10 THREADED ENDS

10.1 General

Fitting threads shall be right-hand, conforming to ASME B1.20.1-1983(R2001). They shall be taper threads (NPT), except for slip joint ends, which shall have straight pipe threads (NPSM).

10.2 Chamfer

All internal threads shall be chamfered a distance not less than one-half the pitch of the thread at an angle of approximately 45 deg with the axis of the thread, and all external threads shall be chamfered at an angle of 30 deg to 45 deg from the axis, for the purposes of easier entrance in making a joint and protection of the thread. Chamfering shall be concentric with the threads. The length of threads specified in all tables shall be measured to include the chamfer.

10.3 Threading Tolerances

Tapered pipe threads (NPT) shall be checked by use of working plug or ring gages, either standard or limit types. Gages shall be threaded on/in hand tight. The reference point for gaging internal product threads depends upon the chamfer diameter. When the internal chamfer diameter exceeds the major diameter of the internal thread, the reference point is the last thread scratch on the chamfer cone. Otherwise, when the internal chamfer diameter does not exceed the major diameter of the internal thread, the reference point is the end of the fitting. On the external thread, the reference point shall be flush with the end of the fitting. Gaging practices shall be as shown in Notes 3 and 4 of Table 3. Straight pipe threads (NPSM) shall be checked by the use of standard GO and NOT GO plug and ring gages.

11 DESIGN OF THREADED ENDS

External and internal threaded ends of fittings will be furnished with a polygon to facilitate installation.

12 ALIGNMENT

The maximum allowable variation in the angular alignment of all openings shall be 0.06 in. in 1 ft (0.5%), other than in the direction of pitch (see section 3).

13 GAGING

13.1 Standard Gaging Method of Solder Joint Ends

The standard method of gaging the diameter tolerances for male and female ends shall be by use of plain plug and ring gages designed to hold the product within the limits established in Table 2.

13.2 Optional Gaging Method of Solder Joint Ends

For gaging the diameter tolerance of male and female ends, the manufacturer may use direct reading instruments instead of ring and plug gages as specified in para. 13.1. When gaging the diameters of male and female ends, using direct reading instruments, refer to section 9. In case of a dispute, ring/plug gages shall be used as the referee method.

Copyright ASME International
Provided by IHS under license with ASME
No reproduction or networking permitted without license from IHS
Not for Resale

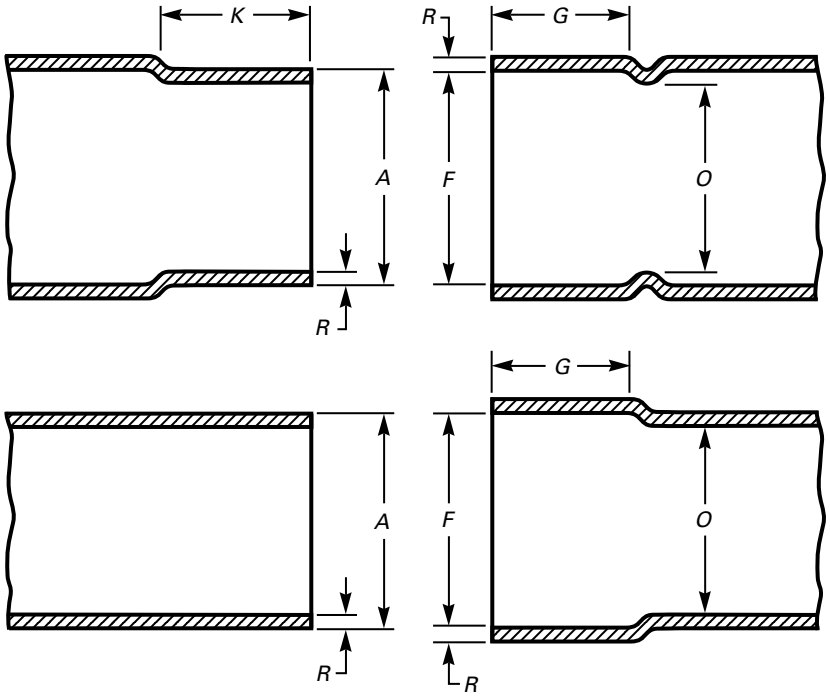

Male End (FTG) **Female End (FTG)**

TABLE 2 DIMENSIONS OF SOLDER JOINT ENDS

Nominal Tube Size [Note (1)]	Male End			Female End			Metal Thickness *R*, Min. [Note (4)]	Inside Diameter of Fitting *O*, Min. [Note (5)]
	Outside Diameter *A*, [Note (2)]		Length *K*, Min. [Note (3)]	Inside Diameter *F*, [Note (2)]		Depth *G*, Min. [Note (3)]		
	Min.	Max.		Min.	Max.			
1¼	1.372	1.377	0.56	1.378	1.382	0.50	0.040	1.29
1½	1.621	1.627	0.62	1.628	1.633	0.56	0.042	1.53
2	2.121	2.127	0.69	2.128	2.133	0.62	0.042	2.01
3	3.121	3.127	0.81	3.128	3.133	0.75	0.045	2.98
4	4.121	4.127	1.06	4.128	4.133	1.00	0.058	3.93

GENERAL NOTE: Dimensions are in inches.

NOTES:
(1) For size designation of fitting, see para. 5.
(2) See para. 9
(3) *K* dimensions of 0.44, 0.50, and 0.56 in., and *G* dimensions of 0.38, 0.44, and 0.50 in., respectively, for sizes 1¼, 1½, and 2 are sound and acceptable from an engineering standpoint. However, the cup depths specified provide greater latitude in making accurate installations.
(4) *R* dimension is based on DWV tubing, which is intended for aboveground use.
(5) Inside diameter of fitting is based on Type M copper water tube (ASTM B 88).

Copyright ASME International
Provided by IHS under license with ASME
No reproduction or networking permitted without license from IHS Not for Resale

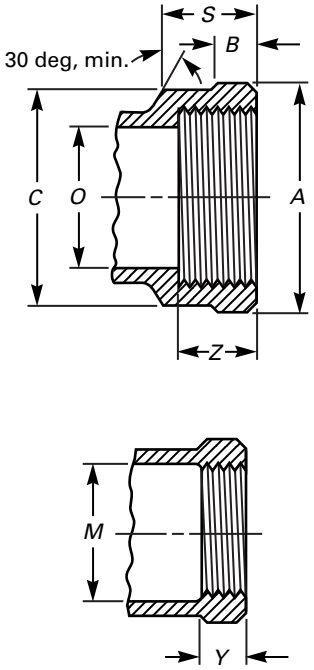

Internal Threaded End (F)

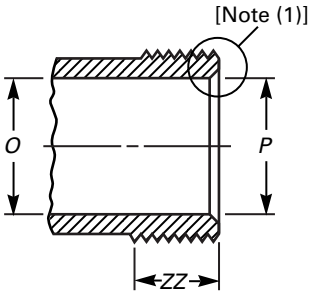

External Threaded End (M)

TABLE 3 DIMENSIONS OF THREADED ENDS — DWV

	Internal End [Note (3)]								External End [Note (4)]		
Nominal Thread Size [Note (2)]	Dia. of Band or Across Flats of Polygon *A* Min.	Band Length *B* Min.	Dia. of Body Over Thread *C* Min.	Inside Dia. of Fitting *O* Min.	*M* Min.	Length of Thread *Y* Min.	*S* Min.	Depth of Bore *Z* Min.	Inside Dia. of Fitting *O* Min.	Thread End Bore *P* Max.	Length of Effective Thread *ZZ* Min.
$1\frac{1}{4}$	1.78	0.34	1.72	1.29	1.66	0.42	0.72	0.69	1.29	1.37	0.71
$1\frac{1}{2}$	2.06	0.38	1.98	1.53	1.90	0.42	0.72	0.69	1.53	1.61	0.72
2	2.53	0.50	2.48	2.01	2.38	0.44	0.81	0.75	2.01	2.07	0.76
3	3.72	0.56	3.68	2.98	3.50	0.77	1.28	1.22	2.98	3.08	1.20

GENERAL NOTE: Dimensions are in inches.

NOTES:
(1) $1\frac{1}{4}$, $1\frac{1}{2}$, and 2 male threaded ends may have inside chamfer for slip nut connections.
(2) Thread size is as governed by ASME B1.20.1-1983(R2001).
(3) Internal threads shall be gaged from $\frac{1}{2}$ turn large to $1\frac{1}{2}$ turn small from the gaging notch on the plug when using working gages.
(4) External threads shall be gaged $\frac{1}{2}$ turn small to $1\frac{1}{2}$ turn large from the face of the ring when using working gages.

Copyright ASME International
Provided by IHS under license with ASME
No reproduction or networking permitted without license from IHS
Not for Resale

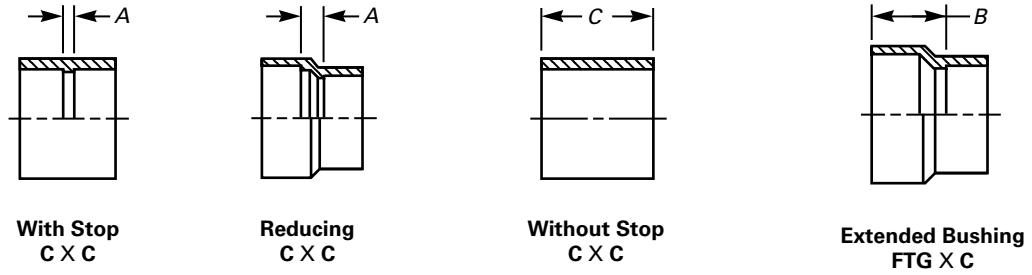

DWV Couplings

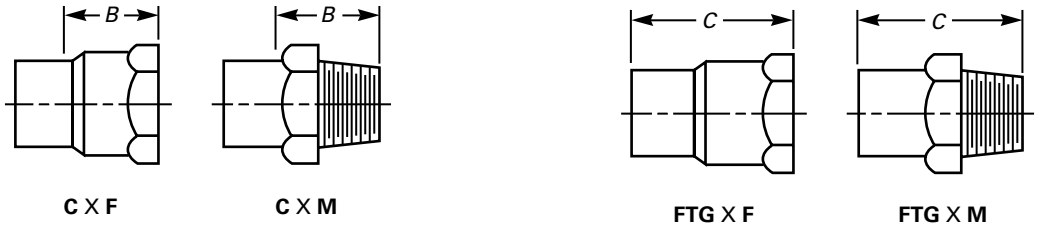

DWV Adapters

TABLE 4 DIMENSIONS OF DWV COUPLINGS, EXTENDED BUSHINGS, AND ADAPTERS

Nominal Thread or Tube Size	Couplings C × C *A* Min.	Coupling Reducer C × C *A* Min.	Couplings Without Stop C × C *C* Min.	Bushing Extended FTG × C *B* Min.	Adapters			
					C × F *B* Min.	C × M *B* Min.	FTG × F *C* Min.	FTG × M *C* Min.
1¼	0.06	. . .	1.00	. . .	0.73	0.86	1.36	. . .
1¼ × 1½	. . .	. . .	. . .	. . .	. . .	1.23	. . .	. . .
1½	0.06	. . .	1.12	. . .	0.73	0.86	1.48	1.69
1½ × 1¼	. . .	0.19	. . .	0.81	. . .	0.98	. . .	. . .
1½ × 2	. . .	. . .	. . .	. . .	. . .	1.48	. . .	. . .
2	0.06	. . .	1.25	. . .	0.86	0.86	1.61	. . .
2 × 1½	. . .	0.25	. . .	1.06	. . .	. . .	. . .	. . .
2 × 1¼	. . .	0.25	. . .	1.00	. . .	0.92	. . .	. . .
3	0.06	. . .	1.50	. . .	1.33	1.45	2.20	. . .
3 × 2	. . .	0.25	. . .	1.12	. . .	. . .	. . .	. . .
3 × 1½	. . .	0.31	. . .	1.12	. . .	. . .	. . .	. . .
3 × 1¼	. . .	0.31	. . .	1.19	. . .	. . .	. . .	. . .
4	0.06	. . .	2.00	. . .	. . .	. . .	. . .	. . .
4 × 3	. . .	0.38	. . .	1.44	. . .	. . .	. . .	. . .

GENERAL NOTE: Dimensions are in inches.

Copyright ASME International
Provided by IHS under license with ASME
No reproduction or networking permitted without license from IHS Not for Resale

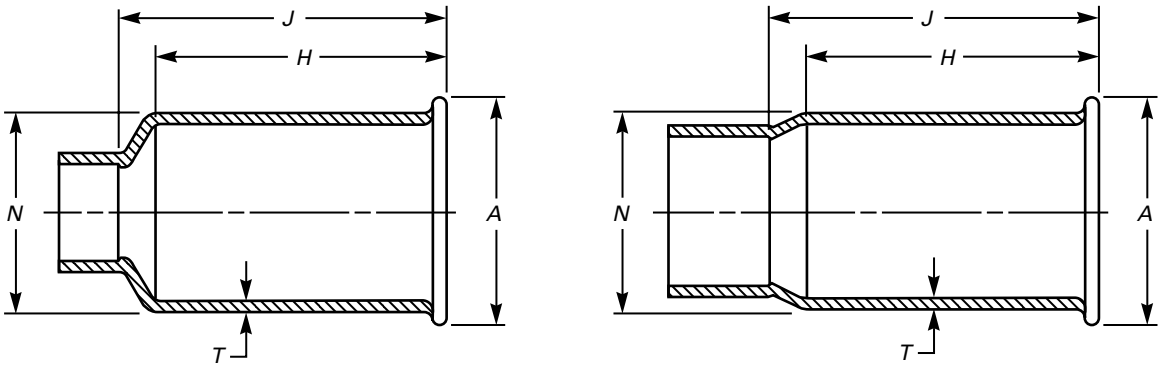

Reducing Size
C X **Spigot**

Straight Size
C X **Spigot**

DWV Soil Pipe Adapters

TABLE 5 DIMENSIONS OF DWV SOIL PIPE ADAPTERS[1]

Dimension		Nominal Size						
		2 × 2	**1½ × 2**	**1¼ × 2**	**3 × 3**	**2 × 3**	**4 × 4**	**3 × 4**
A	max.	2.75	2.75	2.75	3.88	3.88	4.88	4.88
	min.	2.69	2.69	2.69	3.81	3.81	4.81	4.81
H, min.		2.36	3.17	3.17	2.64	3.39	2.88	3.63
J, min.		2.50	3.44	3.44	2.88	3.75	3.25	4.06
N		2.450	2.450	2.450	3.490	3.490	4.490	4.490
T, min.		0.054	0.054	0.054	0.063	0.063	0.072	0.072

GENERAL NOTE: Dimensions are in inches.

NOTE:
(1) Dimensions are for extra-heavy weight soil pipe (reference ASTM A 74). For service weight soil pipe, *A* and *N* nominal dimensions may be from ⅛ to 5/16 in. smaller than dimensions shown in Table.

Copyright ASME International
Provided by IHS under license with ASME
No reproduction or networking permitted without license from IHS
Not for Resale

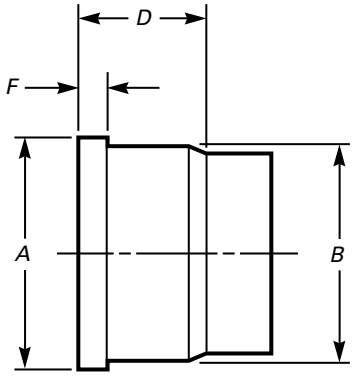

Straight Size

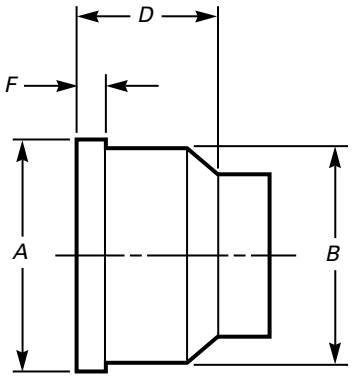

Reducing Size

DWV Soil Pipe Adapter – C X No-Hub
For Use With Stainless Steel Clamp and Elastomer Gasket

TABLE 6 DIMENSIONS OF DWV C X NO-HUB SOIL PIPE ADAPTER

Nominal Size	*A* ± 0.06	*B* ± 0.06	*D*, Min.	*F* $^{+0.13}_{-0.00}$
2	2.38	2.31	1.22	0.25
$1\frac{1}{2}$ × 2	2.38	2.31	1.25	0.25
$1\frac{1}{4}$ × 2	2.38	2.31	1.28	0.25
3	3.41	3.34	1.22	0.25
2 × 3	3.41	3.34	1.25	0.25
$1\frac{1}{2}$ × 3	3.41	3.34	1.28	0.25
4	4.44	4.38	1.22	0.31
3 × 4	4.44	4.38	1.25	0.31

GENERAL NOTE: Dimensions are in inches.

Copyright ASME International
Provided by IHS under license with ASME
No reproduction or networking permitted without license from IHS Not for Resale

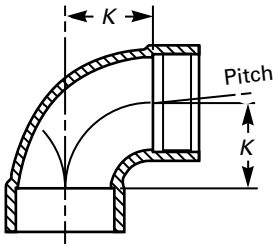

DWV 90 deg Ell
C X C

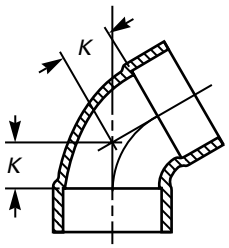

DWV 60 deg Ell
C X C

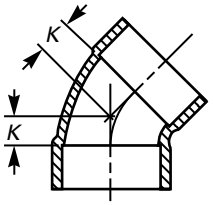

DWV 45 deg Ell
C X C

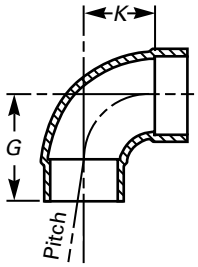

DWV 90 deg FTG Ell
FTC X C

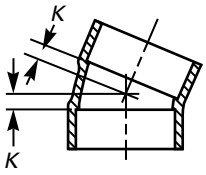

DWV $22^1/_2$ deg Ell
C X C

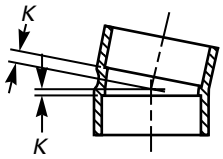

DWV $11^1/_4$ deg Ell
C X C

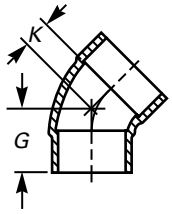

DWV 45 deg FTG Ell
FTG X C

DWV Elbows

TABLE 7 DIMENSIONS OF DWV ELBOWS

Angle	Dimensions	Nominal Tube Size				
		$1^1/_4$, Min.	$1^1/_2$, Min.	2, Min.	3, Min.	4, Min.
90 deg C × C	*K*	1.11	1.36	1.86	2.77	3.69
60 deg C × C	*K*	0.61	0.73	1.04	1.58	. . .
45 deg C × C	*K*	0.42	0.48	0.73	1.08	1.44
$22^1/_2$ deg C × C	*K*	0.11	0.17	0.30	0.45	0.62
$11^1/_4$ deg C × C	*K*	0.04	0.04	0.11	0.14	0.31
90 deg FTG × C	*K*	1.11	1.30	1.86	2.77	3.69
	G	1.67	1.98	2.54	3.58	4.76
45 deg FTG × C	*K*	0.42	0.48	0.73	1.08	1.44
	G	0.98	1.11	1.42	1.89	2.50

GENERAL NOTE: Dimensions are in inches.

Copyright ASME International
Provided by IHS under license with ASME
No reproduction or networking permitted without license from IHS
Not for Resale

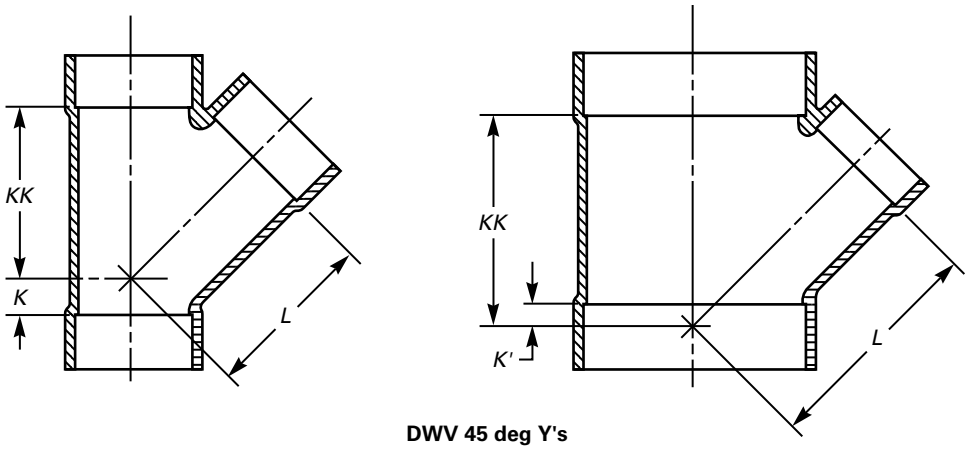

DWV 45 deg Y's
C X C X C

TABLE 8 DIMENSIONS OF DWV 45 Deg Y's

Nominal Tube Size	*K*	*K′*	*KK* Min.	*L* Min.
$1\frac{1}{4}$	0.23	. . .	1.94	1.86
$1\frac{1}{2}$	0.30	. . .	2.31	2.23
$1\frac{1}{2} \times 1\frac{1}{2} \times 1\frac{1}{4}$	0.17	. . .	2.12	2.04
$1\frac{1}{2} \times 1\frac{1}{4} \times 1\frac{1}{2}$	0.30	. . .	2.38	2.11
$1\frac{1}{2} \times 1\frac{1}{4} \times 1\frac{1}{4}$	0.17	. . .	2.19	1.98
2	0.48	. . .	2.81	2.73
$2 \times 2 \times 1\frac{1}{2}$	0.11	. . .	2.50	2.54
$2 \times 2 \times 1\frac{1}{4}$	0	. . .	2.31	2.36
$2 \times 1\frac{1}{2} \times 2$	0.48	. . .	3.19	2.73
$2 \times 1\frac{1}{2} \times 1\frac{1}{2}$	0.11	. . .	2.81	1.55
3	0.73	. . .	4.12	4.01
$3 \times 3 \times 2$	0	. . .	3.56	3.58
$3 \times 3 \times 1\frac{1}{2}$	. . .	0.13	3.19	3.33
$3 \times 3 \times 1\frac{1}{4}$	. . .	0.19	2.81	3.08
4	0.94	. . .	5.38	5.26

GENERAL NOTE: Dimensions are in inches.

--`,,`,,`-`-`,,`,,`,`,,`---

Copyright ASME International
Provided by IHS under license with ASME
No reproduction or networking permitted without license from IHS Not for Resale

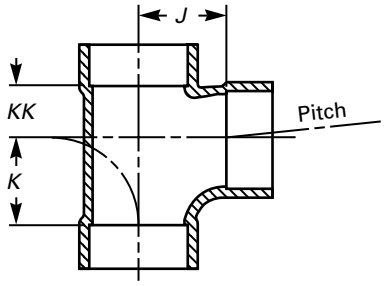

DWV Tees
C X C X C

TABLE 9 DIMENSIONS OF DWV TEES

Nominal Tube Size	*J* Min.	*K* Min.	*KK* Min.
$1\frac{1}{4}$	1.05	1.04	0.75
$1\frac{1}{2}$	1.30	1.30	0.81
$1\frac{1}{2} \times 1\frac{1}{2} \times 1\frac{1}{4}$	1.17	1.04	0.81
$1\frac{1}{2} \times 1\frac{1}{4} \times 1\frac{1}{2}$	1.36	1.36	0.94
$1\frac{1}{2} \times 1\frac{1}{4} \times 1\frac{1}{4}$	1.23	1.11	0.94
2	1.67	1.80	1.06
$2 \times 2 \times 1\frac{1}{2}$	1.48	1.23	0.88
$2 \times 2 \times 1\frac{1}{4}$	1.42	1.04	0.75
$2 \times 1\frac{1}{2} \times 2$	1.69	1.80	1.31
$2 \times 1\frac{1}{2} \times 1\frac{1}{2}$	1.48	1.30	1.19
3	2.51	2.77	1.69
$3 \times 3 \times 2$	2.14	1.77	1.13
$3 \times 3 \times 1\frac{1}{2}$	1.95	1.27	0.94
$3 \times 3 \times 1\frac{1}{4}$	1.89	1.01	0.81
4	3.76	3.76	2.06

GENERAL NOTE: Dimensions are in inches.

Copyright ASME International
Provided by IHS under license with ASME
No reproduction or networking permitted without license from IHS

Not for Resale

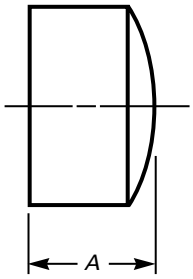

DWV Caps
C

TABLE 10 DIMENSIONS OF DWV CAPS

Nominal Tube Size	*A*
$1\frac{1}{4}$	0.69
$1\frac{1}{2}$	0.75
2	0.81

GENERAL NOTE: Dimensions are in inches.

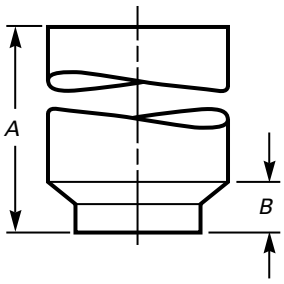

DWV Vent Increasers
C X **FTG**

TABLE 11 DIMENSIONS OF DWV VENT INCREASERS

Nominal Tube Size	*A*	*B* Max.
3 × 4 × 18	18	3
3 × 4 × 24	24	3
3 × 4 × 30	30	3

GENERAL NOTE: Dimensions are in inches.

Copyright ASME International
Provided by IHS under license with ASME
No reproduction or networking permitted without license from IHS Not for Resale

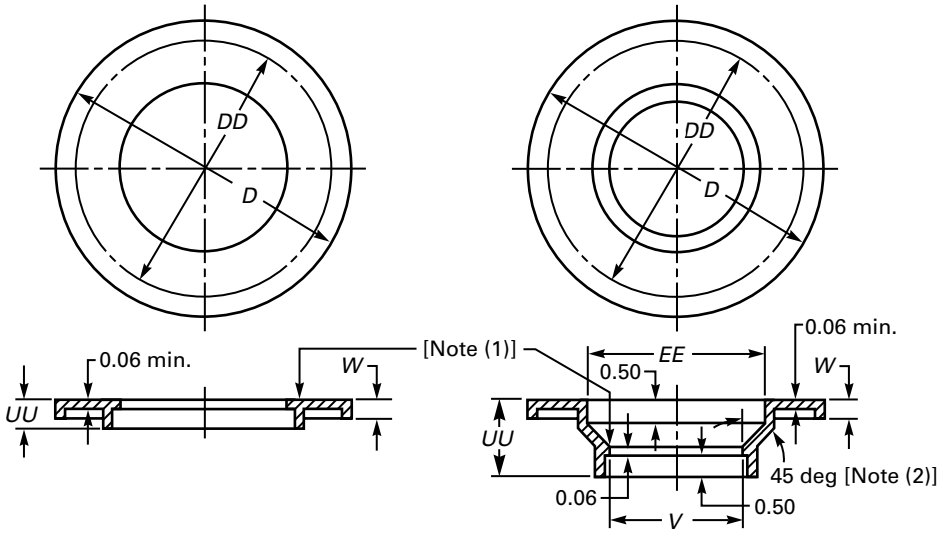

Size 4 Closet Flange **Size 3 Closet Flange**

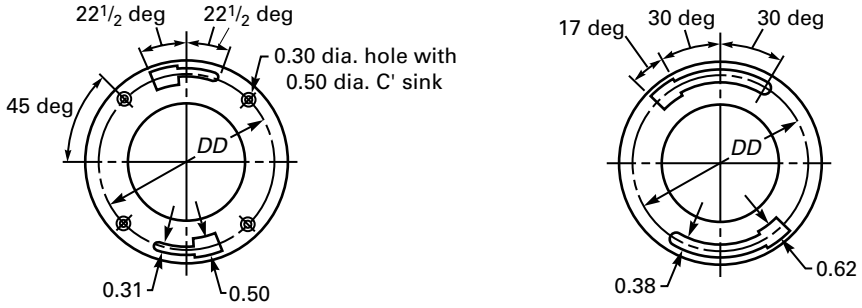

Quarter Slot With Holes **Half Slot**

Suggested Slot Arrangements

TABLE 12 DIMENSIONS OF DWV CLOSET FLANGES

Nominal Size	*D* Min.	*DD*	*EE*	*UU* Min.	*V* Min. [Note (3)]	*W*
3	6.75	6	4.12	1.56	2.94	0.25
4	6.75	6		0.62		0.25

GENERAL NOTE: Dimensions are in inches.

NOTES:
(1) Tube stop optional.
(2) 45 deg angle may be extended to face of flange.
(3) For flange with tube stop.

Copyright ASME International
Provided by IHS under license with ASME
No reproduction or networking permitted without license from IHS
Not for Resale

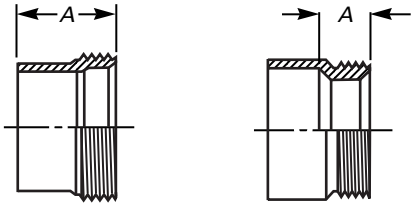

F X **SJ** **C** X **SJ**

TABLE 13 DIMENSIONS OF DWV TRAP ADAPTERS

Nominal Size	FTG × SJ *A*	C × SJ *A*
$1\frac{1}{4}$	1.09	0.50
$1\frac{1}{2}$	1.16	0.50
$1\frac{1}{2} \times 1\frac{1}{4}$	1.19	0.62

GENERAL NOTE: Dimensions are in inches.

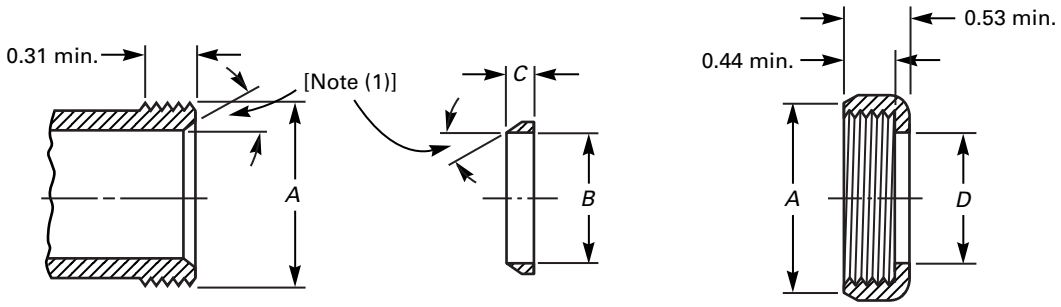

Fitting SJ **Gasket [Note (2)]** **Nut [Note (3)]**

TABLE 14 DIMENSIONS OF DWV SLIP JOINT ENDS

		Gasket		Nut
Nominal Size	Diameter of Thread *A*	Inside Diameter of Gasket *B* Nominal	Length of Gasket *C* Min.	Nut Hole Diameter *D* Nominal
$1\frac{1}{4}$	$1\frac{1}{4}$ NPSM	1.26	0.16	1.28
$1\frac{1}{2}$	$1\frac{1}{2}$ NPSM	1.51	0.19	1.53

GENERAL NOTE: Dimensions are in inches.

NOTES:
(1) Angles must be equal.
(2) Gasket to be pliable not subject to aging or drying out.
(3) Nut may be any material specified in para. 7, or other suitable nonferrous alloy.

Copyright ASME International
Provided by IHS under license with ASME
No reproduction or networking permitted without license from IHS Not for Resale

Copyright ASME International
Provided by IHS under license with ASME
No reproduction or networking permitted without license from IHS
Not for Resale

NONMANDATORY APPENDIX A
REFERENCES

The following is a list of standards and specifications referenced in this Standard, showing the applicable edition or year of approval.

ASME B1.20.1-1983 (R1992), Pipe Threads, General Purpose (Inch)
ASME B16.22-1995, Wrought Copper and Copper Alloy Solder Joint Pressure Fittings
ASME B16.23-1992, Cast Copper Alloy Solder Joint Drainage Fitting (DWV)
ASME Guide SI-1-1982, Oreintation and Guide for Use of SI (Metric) Units, Ninth Edition

Publisher: The American Society of Mechanical Engineers (ASME International), Three Park Avenue, New York, NY 10016-5990; Order Department: 22 Law Drive, Box 2300, Fairfield, NJ 07007-2300

ASTM A 74-98, Standard Specification for Cast Iron Soil Pipe and Fittings
ASTM B 88-99, Standard Specification for Seamless Copper Water Tube
ASTM B 306-99, Standard Specification for Copper Drainage Tube (DWV)

Publisher: The American Society for Testing and Materials (ASTM), 100 Barr Harbor Drive, West Conshohocken, PA 19428

ISO 9000-1: 1994, Quality management and quality assurance standards — Part 1: Guidelines for selection and use
ISO 9000-2: 1997, Quality management and quality assurance standards — Part 2: Generic guidelines for the application of ISO 9001, ISO 9002, and ISO 9003
ISO 9000-3: 1997, Quality management and quality assurance standards — Part 3: Guidelines for the application of ISO 9001 to the development, supply, installation, and maintenance of computer software
ISO 9001: 1994, Quality systems — Model for quality assurance in design, development, production, installation, and servicing
ISO 9002: 1994, Quality systems — Model for quality assurance in production, installation, and servicing
ISO 9003: 1994, Quality systems — Model for quality assurance in final inspection and test

Publisher: International Organization for Standardization (ISO), 1 rue de Varembé, Case Postale 56, CH-1121, Genève 20, Switzerland/Suisse

--`-`-`-,,`,,`,`,,`---

Copyright ASME International
Provided by IHS under license with ASME
No reproduction or networking permitted without license from IHS
Not for Resale

NONMANDATORY APPENDIX B
QUALITY SYSTEM PROGRAM

The products manufactured in accordance with this Standard shall be produced under a quality system program following the principles of an appropriate standard from the ISO 9000 series.[1] A determination of the need for registration and/or certification of the product manufacturer's quality system program by an independent organization shall be the responsibility of the manufacturer. Detailed documentation demonstrating program compliance shall be available to the purchaser at the manufacturer's facility. A written, summarized description of the program used by the product manufacturer shall be available to the purchaser upon request. The product manufacturer is defined as the entity whose name or trademark appears on the product in accordance with the marking or identification requirements of this Standard.

[1] The series is also available from the American National Standards Institute (ANSI) and the American Society for Quality (ASQ) as American National Standards that are identified by a prefix "Q" replacing the prefix "ISO". Each standard of the series is listed in Nonmandatory Appendix A.

Copyright ASME International
Provided by IHS under license with ASME
No reproduction or networking permitted without license from IHS
Not for Resale


ISBN 0-7918-2734-8

9 780791 827345

N05701

Copyright ASME International
Provided by IHS under license with ASME
No reproduction or networking permitted without license from IHS

Not for Resale