ASME B16.28 94 ■ 0759670 0550811 155 ■

ASME B16.28-1994
(REVISION OF ASME/ANSI B16.28-1986)

Wrought Steel Buttwelding Short Radius Elbows and Returns

AN AMERICAN NATIONAL STANDARD

The American Society of Mechanical Engineers

Copyright ASME International
Provided by IHS under license with ASME
No reproduction or networking permitted without license from IHS

Not for Resale

AN AMERICAN NATIONAL STANDARD

Wrought Steel Buttwelding Short Radius Elbows and Returns

ASME B16.28-1994

(REVISION OF ASME/ANSI B16.28-1986)

The American Society of Mechanical Engineers

345 East 47th Street, New York, N.Y. 10017

Copyright ASME International
Provided by IHS under license with ASME
No reproduction or networking permitted without license from IHS

Not for Resale

Date of Issuance: November 30, 1994

The 1994 edition of this Standard is being issued with an automatic addenda subscription service. The use of an addenda allows revisions made in response to public review comments or committee actions to be published as necessary; revisions published in addenda will become effective 6 months after the Date of Issuance of the addenda. The next edition of this Standard is scheduled for publication in 1999.

ASME issues written replies to inquiries concerning interpretations of technical aspects of this Standard. The interpretations will be included with the above addenda service. Interpretations are not part of the addenda to the Standard.

ASME is the registered trademark of The American Society of Mechanical Engineers.

This code or standard was developed under procedures accredited as meeting the criteria for American National Standards. The Consensus Committee that approved the code or standard was balanced to assure that individuals from competent and concerned interests have had an opportunity to participate. The proposed code or standard was made available for public review and comment which provides an opportunity for additional public input from industry, academia, regulatory agencies, and the public-at-large.

ASME does not "approve," "rate," or "endorse" any item, construction, proprietary device, or activity.

ASME does not take any position with respect to the validity of any patent rights asserted in connection with any items mentioned in this document, and does not undertake to insure anyone utilizing a standard against liability for infringement of any applicable Letters Patent, nor assume any such liability. Users of a code or standard are expressly advised that determination of the validity of any such patent rights, and the risk of infringement of such rights, is entirely their own responsibility.

Participation by federal agency representative(s) or person(s) affiliated with industry is not to be interpreted as government or industry endorsement of this code or standard.

ASME accepts responsibility for only those interpretations issued in accordance with governing ASME procedures and policies which preclude the issuance of interpretations by individual volunteers.

No part of this document may be reproduced in any form,
in an electronic retrieval system or otherwise,
without the prior written permission of the publisher.

Copyright © 1994 by
THE AMERICAN SOCIETY OF MECHANICAL ENGINEERS
All Rights Reserved
Printed in U.S.A.

Copyright ASME International
Provided by IHS under license with ASME
No reproduction or networking permitted without license from IHS

Not for Resale

FOREWORD

(This Foreword is not part of ASME B16.28-1994.)

In 1921, the American Engineering Standards Committee, later American Standards Association (ASA), organized Sectional Committee B16 to unify and further develop national standards for pipe flanges and fittings (and, later, for valves, gaskets, and valve actuators). Cosponsors of the B16 Committee were the American Society of Mechanical Engineers (ASME), the Heating and Piping Contractors National Association [now Mechanical Contractors Association of America (MCAA)], and the Manufacturers Standardization Society of the Valve and Fittings Industry (MSS). Cosponsors were later designated as cosecretariat organizations.

In 1959, recognizing the increasing use of short radius buttwelding fittings not covered by ASA B16.9-1958, MSS developed Standard Practice SP-59. In 1963, this Standard was submitted to Subcommittee 6 (now Subcommittee F), the B16 group responsible for welded fittings, for consideration as a candidate American Standard. Following approval by the Committee, cosponsors, and ASA, the standard was published as ASA B16.28-1964.

In 1969, review of the document indicated that no changes were necessary. After reorganization of ASA, first as the United States of America Standards Institute (USASI), then as the American National Standards Institute (ANSI), with the Sectional Committee being redesignated as an American National Standards Committee, the reaffirmation was approved and published as ANSI B16.28-1964 (R1972). Subcommittee F then began a major revision to bring the standard up to date with current practice and usage. Metric dimensional equivalents were also added. Following Standards Committee, cosecretariat, and ANSI approval, the revision was published as ANSI B16.28-1978.

In 1982, American National Standards Committee B16 was reorganized as an ASME Committee operating under procedures accredited by ANSI. In the 1986 edition, the text was revised and inch dimensions were established as the standard. Following approval by the Standards Committee and ASME, approval as an American National Standard was given by ANSI on November 12, 1986, with the new designation ASME/ANSI B16.28-1986.

Commencing in 1991, the subcommittee reviewed the document and made a number of revisions. The 80% factor used in the computed proof test pressure in earlier B16.28 editions was changed to 100% in this 1994 edition. After public review and approval by ASME, this edition was approved by ANSI on October 10, 1994.

Requests for interpretation or suggestions for revision should be sent to the Secretary, B16 Committee, The American Society of Mechanical Engineers, United Engineering Center, 345 East 47th Street, New York, NY 10017.

Copyright ASME International
Provided by IHS under license with ASME
No reproduction or networking permitted without license from IHS
Not for Resale

ASME B16 COMMITTEE
Standardization of Valves, Flanges, Fittings, and Gaskets

(The following is the roster of the Committee at the time of approval of this Standard.)

OFFICERS

W. N. McLean, *Chairman*
R. A. Schmidt, *Vice Chairman*
J. Yarmush, *Secretary*

COMMITTEE PERSONNEL

W. L. Ballis, Columbia Gas Distribution Co., Columbus, Ohio
J. E. Batey, Union Carbide Corp., South Charleston, West Virginia
K. M. Bell, Underwriters Laboratories, Inc., Northbrook, Illinois
R. R. Brodin, Fisher Controls International, Inc., Marshalltown, Iowa
A. Cohen, Copper Development Association, New York, New York
W. C. Farrell, Jr., Consultant, Birmingham, Alabama
C. E. Floren, Mueller Co., Decatur, Illinois
D. R. Frikken, Monsanto Co., St. Louis, Missouri
M. W. Garland, Frick Co., Waynesboro, Pennsylvania
J. B. Hagan, ABS Americas, New Orleans, Louisiana
J. C. Inch, Mueller Brass Co., Hartsville, Tennessee
G. A. Jolly, Henry Vogt Machine Co., Louisville, Kentucky
W. G. Knecht, Anchor/Darling Valve Co., Williamsport, Pennsylvania
R. Koester, The William Powell Co., Cincinnati, Ohio
J. H. McCauley, Jr., James H. McCauley, Inc., Chicago, Illinois
W. N. McLean, Newco Valves, Palos Park, Illinois
A. F. Rhodes, Consultant, Houston, Texas
F. C. Rosch, Jr., Technicon Enterprises, Inc., Lancaster, Pennsylvania
S. A. Rowland, U.S. Coast Guard, Washington, D.C.
R. A. Schmidt, Ladish Co., Russellville, Arkansas
W. M. Stephan, Flexitallic, Inc., Pennsauken, New Jersey
T. F. Stroud, Ductile Iron Pipe Research Association, Birmingham, Alabama
R. E. White, Repairs, Inc., South Bend, Indiana
D. A. Williams, Southern Company Services, Birmingham, Alabama
J. Yarmush, ASME, New York, New York

PERSONNEL OF SUBCOMMITTEE F — STEEL THREADED AND WELDING FITTINGS

G. A. Jolly, *Chairman,* Henry Vogt Machine Co., Louisville, Kentucky
U. D'Urso, *Secretary,* ASME, New York, New York
P. R. Benavides, Tube Forgings of America, Inc., Portland, Oregon
G. Cuccio, Capitol Manufacturing Co., Crowley, Louisiana
D. R. Frikken, Monsanto Co., St. Louis, Missouri

Copyright ASME International
Provided by IHS under license with ASME
No reproduction or networking permitted without license from IHS
Not for Resale

R. E. Johnson, Flowline Corp., New Castle, Pennsylvania
R. C. Lafferty, Penna Machine Works, Inc., Chester, Pennsylvania
D. H. Monroe, Consultant, Birmingham, Alabama
D. W. Muir, Canvil Limited, Simcoe, Ontario, Canada
R. A. Schmidt, Ladish Co., Russellville, Arkansas
L. A. Willis, Dow Chemical Co., Freeport, Texas

Copyright ASME International
Provided by IHS under license with ASME
No reproduction or networking permitted without license from IHS
Not for Resale

CONTENTS

Foreword iii
Standards Committee Roster v

1 Scope 1
2 Design and Pressure Ratings 1
3 Size 1
4 Marking 2
5 Material 2
6 Fittings Dimensions 2
7 End Preparation 2
8 Production Tests 2
9 Design Proof Tests 2
10 Tolerances 3

Figure
1 Welding Bevel and Root Face for Fitting 4

Tables
1 Tolerances 5
2 Dimensions of Short Radius Elbows 6
3 Dimensions of Short Radius 180 deg Returns 6

Annexes
A Metric (SI) Tables 7
B References 11

Copyright ASME International
Provided by IHS under license with ASME
No reproduction or networking permitted without license from IHS
Not for Resale

WROUGHT STEEL BUTTWELDING SHORT RADIUS ELBOWS AND RETURNS

1 SCOPE

1.1 General

This Standard covers ratings, overall dimensions, testing, tolerances, and markings for wrought carbon and alloy steel buttwelding short radius elbows and returns. The term *wrought* denotes fittings made of pipe, tubing, plate, or forgings.

1.2 Fabricated Fittings

Fabricated fittings employing intersection welds are not covered by this Standard. Design of such fittings is covered in the ASME B31, Code for Pressure Piping or the ASME Boiler and Pressure Vessel Code.

1.3 References

1.3.1 Referenced Standards. Standards and specifications adopted by reference in this Standard are shown in Annex B, which is part of this Standard. It is not considered practical to identify the specific edition of each standard and specification in the individual references. Instead the specific edition reference is identified in Annex B. A product made in conformance with a prior edition of reference standards and in all other respects conforming to this Standard will be considered to be in conformance.

1.3.2 Codes and Regulations. A fitting used under the jurisdiction of the ASME Boiler and Pressure Vessel Code, the ASME Code for Pressure Piping, or a governmental regulation is subject to any limitation of that code or regulation. This includes any maximum temperature limitation or rule governing the use of a material at low temperature.

1.4 Service Conditions

Criteria for selection of fitting types and materials suitable for particular fluid service are not within the scope of this Standard.

1.5 Welding

Installation welding requirements are outside the scope of this Standard. Installation welding shall be done in accordance with the applicable piping code or regulation covering the piping system into which the fittings are installed.

2 DESIGN AND PRESSURE RATINGS

2.1 Design of Fittings

The design of the fittings shall be established by mathematical method analysis contained in nationally recognized pressure vessel or piping codes or at the manufacturer's option by proof testing in accordance with Section 9 of this Standard. In order to meet design requirements, it is expected that some portion of formed fittings may have to be thicker than the pipe wall with which the fitting is intended to be used.

2.2 Basis of Ratings

The allowable pressure ratings for fittings designed in accordance with this Standard shall be as for straight seamless pipe of equivalent size and material [nominal pipe size (NPS), wall thickness or schedule number, and including a comparison of chemical composition and mechanical properties of the respective material specification].

2.3 Record Maintenance

Records of mathematical analysis and/or successful proof test data shall be available at the manufacturer's facility for inspection by the purchaser. Certified copies of this data shall be made available to the purchaser upon agreement with the manufacturer.

3 SIZE

The sizes of fittings in Tables 1, 2, and 3 are identified by the corresponding NPS as defined in ANSI/ASME B36.10M.

Copyright ASME International
Provided by IHS under license with ASME
No reproduction or networking permitted without license from IHS
Not for Resale

4 MARKING

4.1 Standard Marking (See Note)

Each fitting shall be permanently marked to show the following:

(a) manufacturer's name or trademark;

(b) material grade and class (ASTM or ASME grade symbol) and the heat number or manufacturer's heat identification;

(c) conformance to this Standard, designated by the prefix "WP" in the grade symbol marking;

(d) schedule number or nominal wall thickness designation;

(e) NPS.

NOTE: The pressure rating of the fitting is represented by the NPS, wall thickness (or schedule number), and material marked on the fitting. (See para. 2.2.)

4.2 Exceptions

Where the size of the fitting does not permit complete marking, the identification marks may be omitted in reverse of the order presented above.

4.3 Depth of Stamping

Where steel stamps are used, they shall be low stress and care should be taken so that the marking is not deep enough or sharp enough to cause cracks or to reduce the wall thickness of the fitting below the design minimum allowed.

5 MATERIAL

Wrought fittings covered by this Standard shall be in accordance with ASTM A 234, A 403, A 420, or the corresponding ASME Boiler and Pressure Vessel Code, Section II specification.

6 FITTINGS DIMENSIONS

This Standard provides for a fixed position for the welding ends with reference to either the center line of the fittings or the overall dimensions. Dimensional standards for these fittings are found in Tables 2, 3, A2, and A3.

The surface contour shall be essentially a segment of a torus that may be terminated in tangents.

7 END PREPARATION

Unless otherwise specified by the purchaser, welding ends shall be in accordance with ASME B16.25. For convenience, these welding ends are shown in Fig. 1 for fittings with wall thicknesses equal to that of the pipe to which they will be welded for use without a backing ring. Unless otherwise specified, fittings are furnished with welding ends for use without backing rings for the pipe wall thickness specified.

8 PRODUCTION TESTS

Hydrostatic testing of wrought fittings is not required by this Standard. All fittings shall be capable of withstanding, without leakage, a hydrostatic test pressure required by the applicable code for seamless pipe equivalent to the NPS, wall thickness, and material grade marked on the fitting.

9 DESIGN PROOF TESTS

9.1 Required Tests

Proof tests shall be made as set forth herein when the manufacturer chooses proof testing to qualify the fitting design. Unless otherwise agreed upon between manufacturer and purchaser, the only required type of proof test is a bursting strength test.

Proof tests conducted prior to the issuance of this edition of this Standard, which meet the requirements of this edition, are acceptable.

9.2 Test Assembly

9.2.1 Representative Fittings. Fittings that are representative of production and selected for test shall be identified as to material, grade, and lot, including heat treatment. They shall be inspected for dimensional compliance to this Standard.

9.2.2 Other Components. Straight seamless or welded pipe sections whose calculated bursting strength is at least as great as the proof test pressure as calculated in para. 9.3 shall be welded to each end of the fitting to be tested. Any internal misalignment greater than 0.06 in. (1.6 mm) shall be reduced by taper boring at a slope not over 1:3. The minimum length of pipe sections for closures shall be as follows:

(a) one pipe outside diameter for NPS 14 and smaller;

(b) one-half pipe outside diameter for NPS greater than 14.

Copyright ASME International
Provided by IHS under license with ASME
No reproduction or networking permitted without license from IHS

Not for Resale

9.3 Test Procedure and Acceptance Standard

Test fluid shall be water or other liquid used for hydrostatic testing. Hydrostatic pressure shall be applied to the assembly.

The proof test requirements are met when assembly withstands, without rupture, 105% of the computed proof test pressure defined below.

$$P = \frac{2St}{D}$$

where

P = computed proof test pressure
S = actual ultimate tensile strength of the test fitting determined on a specimen taken from the fitting or representative of the test fitting. The test fitting shall meet all requirements of one of the materials listed in para. 5.
t = nominal pipe wall thickness of the pipe that the fitting marking identifies
D = specified outside diameter of pipe that the fitting marking identifies

9.4 Applicability of Results

It is not necessary to conduct an individual test of fittings with all combinations of sizes, wall thicknesses, and materials. A proof test meeting the requirements of para. 9.3 on one representative fitting may represent other fittings of the same type to the extent described below.

9.4.1 Size Range. One test fitting may be used to qualify similarly proportioned fittings with an NPS range from one-half to twice that for the tested fitting.

9.4.2 Thickness Range. One test fitting may be used to qualify similarly proportioned fittings with t/D ranges from one-half to three times that for the tested fitting.

9.4.3 Material Grades. The pressure retaining capacity of a geometrically identical fitting made of various grades of steel will be directly proportional to the tensile properties of the various grades. Therefore, it is necessary to test only a single material grade in a representative fitting to prove the design of the fitting.

10 TOLERANCES

Tolerances for all fittings are shown in Tables 1 and A1, and are based on the nominal dimensions given in Tables 2, 3, A2, and A3.

For the purpose of determining conformance with this Standard, the convention for fixing significant digits where limits, maximum or minimum values, are specified, shall be "rounded off" as defined in ASTM E 29. This requires that an observed or calculated value shall be rounded off to the nearest unit in the last right-hand digit used for expressing the limit.

The listing of decimal tolerances does not imply the method of measurement.

Copyright ASME International
Provided by IHS under license with ASME
No reproduction or networking permitted without license from IHS

Not for Resale

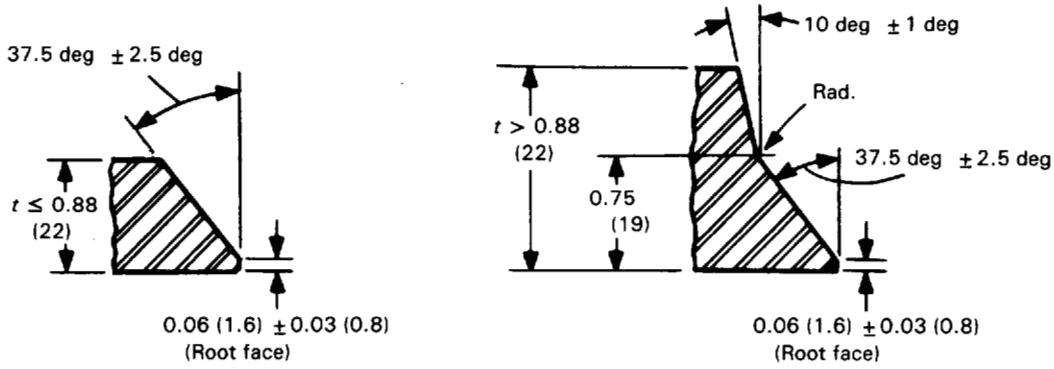

(a) Plain Bevel

(b) Compound Bevel

Nominal Wall Thickness t	End Preparation
Less than x [Note (1)]	Cut square or slightly chamfer, at manufacturer's option.
x to 0.88 incl. (22) [Note (1)]	Plain bevel as in sketch (a) above.
More than 0.88 (22)	Compound bevel as in sketch (b) above.

GENERAL NOTES:
(a) See ASME B16.25 for transitions from bevel and root face into body of fitting and backing ring preparations.
(b) Dimensions in parentheses are in millimeters.

NOTE:
(1) x = 0.19 (5) for carbon steel or ferritic alloy steel and 0.12 (3) for austenitic alloy steel

FIG. 1 WELDING BEVEL AND ROOT FACE FOR FITTING (Without Backing Ring, or With Split Backing Ring)

Copyright ASME International
Provided by IHS under license with ASME
No reproduction or networking permitted without license from IHS
Not for Resale

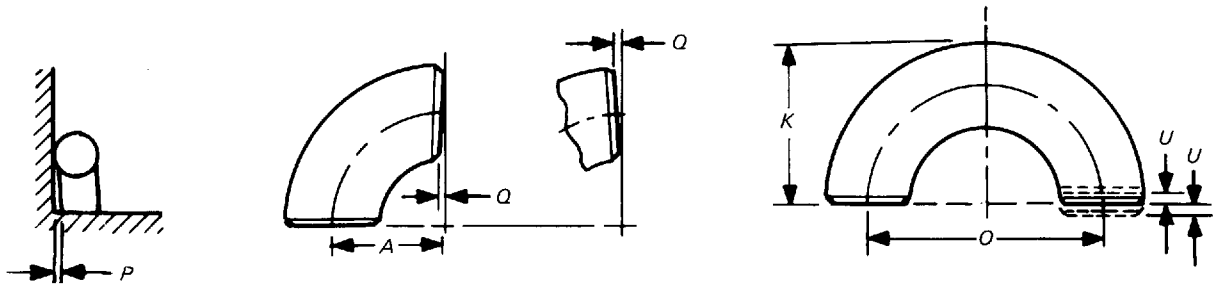

TABLE 1 TOLERANCES

Nominal Pipe Size	All Fittings					90 deg Elbows	180 deg Returns		
	Outside Diameter at Bevel [Notes (1), (2)]	Inside Diameter at End [Notes (1), (3), (4)]	Wall Thickness [Note (3)]	Angularity		Center-to-End Dimension *A*	Center-to-Center Dimension *O*	Back-to-Face Dimension *K*	Alignments of Ends *U*
				Off Angle *Q*	Off Plane *P*				
½ to 2½	+0.06 −0.03	0.03	Not less than 87.5% of nominal thickness marked on fitting	0.03	0.06	0.06	0.25	0.25	0.03
3 to 3½	0.06	0.06		0.03	0.06	0.06	0.25	0.25	0.03
4	0.06	0.06		0.03	0.06	0.06	0.25	0.25	0.03
5 to 8	+0.09 −0.06	0.06		0.06	0.12	0.06	0.25	0.25	0.03
10 to 12	+0.16 −0.12	0.12		0.09	0.19	0.09	0.38	0.25	0.06
14 to 16	+0.16 −0.12	0.12		0.09	0.25	0.09	0.38	0.25	0.06
18	+0.16 −0.12	0.12		0.12	0.38	0.09	0.38	0.25	0.06
20 to 24	+0.25 −0.19	0.19		0.12	0.38	0.09	0.38	0.25	0.06

GENERAL NOTE: Dimensions are in inches. Tolerances are equal plus and minus except as noted.

NOTES:
(1) Out-of-round is the sum of absolute values of plus and minus tolerance.
(2) This tolerance may be exceeded in localized areas of formed fittings where increased wall thickness is required to meet design requirements of para. 2.1.
(3) The inside diameter and the nominal wall thicknesses at ends are to be specified by the purchaser. Wall thickness tolerance applies throughout the fitting.
(4) Unless otherwise specified by the purchaser, these tolerances apply to the nominal inside diameter, which equals the difference between the nominal outside diameter and twice the nominal wall thickness.

Copyright ASME International
Provided by IHS under license with ASME
No reproduction or networking permitted without license from IHS

Not for Resale

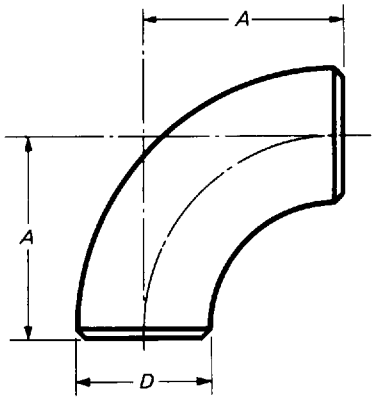

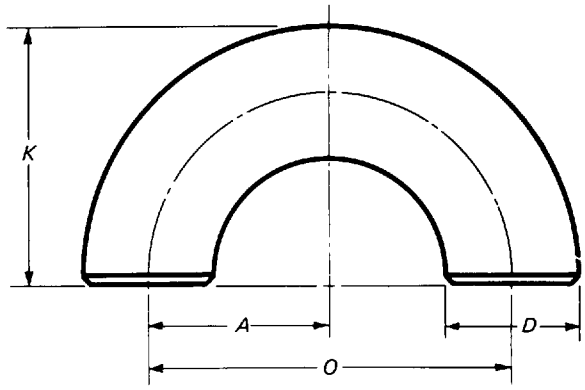

TABLE 2 DIMENSIONS OF SHORT RADIUS ELBOWS

Nominal Pipe Size	Outside Diameter at Bevel *D*	Center-to-End *A*
1	1.32	1.00
1¼	1.66	1.25
1½	1.90	1.50
2	2.38	2.00
2½	2.88	2.50
3	3.50	3.00
3½	4.00	3.50
4	4.50	4.00
5	5.56	5.00
6	6.62	6.00
8	8.62	8.00
10	10.75	10.00
12	12.75	12.00
14	14.00	14.00
16	16.00	16.00
18	18.00	18.00
20	20.00	20.00
22	22.00	22.00
24	24.00	24.00

GENERAL NOTE: Dimensions are in inches.

TABLE 3 DIMENSIONS OF SHORT RADIUS 180 deg RETURNS

Nominal Pipe Size	Outside Diameter at Bevel *D*	Center-to-Center *O*	Back-to-Face *K*
1	1.32	2.00	1.62
1¼	1.66	2.50	2.06
1½	1.90	3.00	2.44
2	2.38	4.00	3.19
2½	2.88	5.00	3.94
3	3.50	6.00	4.75
3½	4.00	7.00	5.50
4	4.50	8.00	6.25
5	5.56	10.00	7.75
6	6.62	12.00	9.31
8	8.62	16.00	12.31
10	10.75	20.00	15.38
12	12.75	24.00	18.38
14	14.00	28.00	21.00
16	16.00	32.00	24.00
18	18.00	36.00	27.00
20	20.00	40.00	30.00
22	22.00	44.00	33.00
24	24.00	48.00	36.00

GENERAL NOTES:
(a) Dimensions are in inches.
(b) Dimension *A* is equal to one-half of dimension *O*.

Copyright ASME International
Provided by IHS under license with ASME
No reproduction or networking permitted without license from IHS

Not for Resale

ANNEX A
METRIC (SI) TABLE

(This Annex is an integral part of ASME B16.28-1994, and is placed after the main text for convenience.)

The metric tolerances and dimensions shown in Tables A1, A2, and A3 are for information and reference. They are not exact equivalents of the dimensions in Tables 1, 2, and 3. If used by agreement between manufacturer and purchaser, complete dimensional interchangeability with standard components can not be assured. Use of a combination of standard and metric values is contrary to the intent of this Standard.

Copyright ASME International
Provided by IHS under license with ASME
No reproduction or networking permitted without license from IHS

Not for Resale

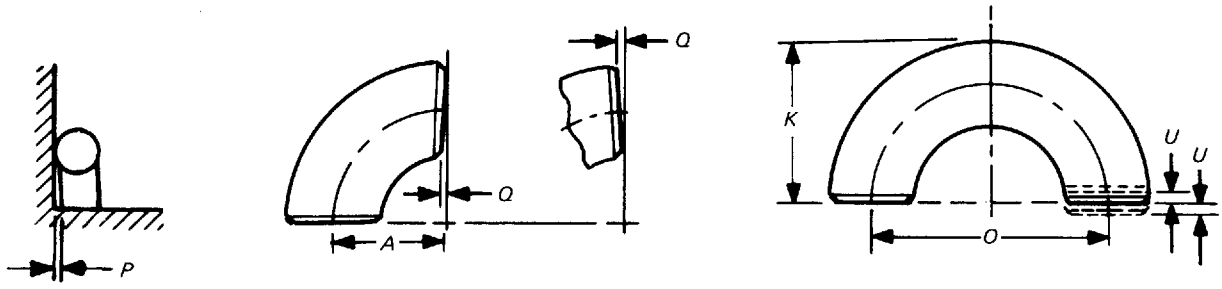

TABLE A1 TOLERANCES

Nominal Pipe Size	All Fittings					90 deg Elbows	180 deg Returns		
	Outside Diameter at Bevel [Notes (1), (2)]	Inside Diameter at End [Notes (1), (3), (4)]	Wall Thickness [Note (3)]	Angularity		Center-to-End Dimension *A*	Center-to-Center Dimension *O*	Back-to-Face Dimension *K*	Alignments of Ends *U*
				Off Angle *Q*	Off Plane *P*				
½ to 2½	1	0.8	Not less than 87.5% of nominal thickness marked on fitting	1	2	2	7	7	1
3 to 3½	1	1.6		1	2	2	7	7	1
4	+2 −1	1.6		1	2	2	7	7	1
5 to 6	+3 −1	1.6		2	4	2	7	7	1
8	2	1.6		2	4	2	7	7	1
10 to 12	+4 −3	3.2		3	5	3	10	7	2
14 to 18	+4 −3	3.2		4	10	3	10	7	2
20 to 24	+6 −5	4.8		4	10	3	10	7	2

GENERAL NOTE: Dimensions are in millimeters. Tolerances are equal plus and minus except as noted.

NOTES:
(1) Out-of-round is the sum of absolute values of plus and minus tolerance.
(2) This tolerance may be exceeded in localized areas of formed fittings where increased wall thickness is required to meet design requirements of para. 2.1.
(3) The inside diameter and the nominal wall thicknesses at ends are to be specified by the purchaser. Wall thickness tolerance applies throughout the fitting.
(4) Unless otherwise specified by the purchaser, these tolerances apply to the nominal inside diameter, which equals the difference between the nominal outside diameter and twice the nominal wall thickness.

Copyright ASME International
Provided by IHS under license with ASME
No reproduction or networking permitted without license from IHS
Not for Resale

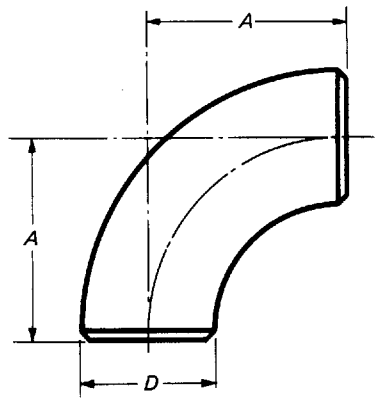

TABLE A2 DIMENSIONS OF SHORT RADIUS ELBOWS

Nominal Pipe Size	Outside Diameter at Bevel *D*			Center-to-End *A*		
				90 deg Elbows		
	Min.	Nom.	Max.	Min.	Nom.	Max.
1	32	33	34	23	25	27
1¼	41	42	43	30	32	34
1½	47	48	49	36	38	40
2	59	60	61	49	51	53
2½	72	73	74	62	64	66
3	88	89	90	74	76	78
3½	101	102	103	87	89	91
4	113	114	116	100	102	104
5	140	141	144	125	127	129
6	167	168	171	150	152	154
8	217	219	221	201	203	205
10	270	273	277	252	254	256
12	321	324	328	302	305	308
14	353	356	360	353	356	359
16	403	406	410	403	406	409
18	454	457	461	454	457	460
20	503	508	514	505	508	511
22	554	559	565	556	559	562
24	605	610	616	607	610	613

GENERAL NOTE: Dimensions are in millimeters.

Copyright ASME International
Provided by IHS under license with ASME
No reproduction or networking permitted without license from IHS

Not for Resale

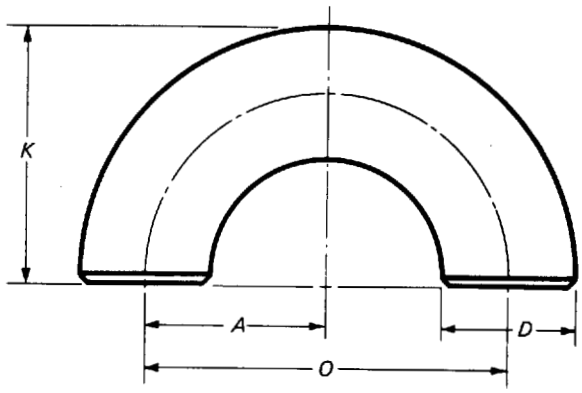

TABLE A3 DIMENSIONS OF SHORT RADIUS 180 deg RETURNS

Nominal Pipe Size	Outside Diameter at Bevel D			Center-to-Center O			Back-to-Face K		
	Min.	Nom.	Max.	Min.	Nom.	Max.	Min.	Nom.	Max.
1	32	33	34	44	51	58	34	41	48
1¼	41	42	43	57	64	71	45	52	59
1½	47	48	49	69	76	83	55	62	69
2	59	60	61	95	102	109	74	81	88
2½	72	73	74	120	127	134	93	100	107
3	88	89	90	145	152	159	114	121	128
3½	101	102	103	171	178	185	133	140	147
4	113	114	116	196	203	210	152	159	166
5	140	141	144	247	254	261	190	197	204
6	167	168	171	298	305	312	230	237	244
8	217	219	221	399	406	413	306	313	320
10	270	273	277	498	508	518	384	391	398
12	321	324	328	600	610	620	460	467	474
14	353	356	360	701	711	721	526	533	540
16	403	406	410	803	813	823	603	610	617
18	454	457	461	904	914	924	679	686	693
20	503	508	514	1006	1016	1026	755	762	769
22	554	559	565	1108	1118	1128	831	838	845
24	605	610	616	1209	1219	1229	907	914	921

GENERAL NOTES:
(a) Dimensions are in millimeters.
(b) Dimension *A* is equal to one-half of dimension *O*.

Copyright ASME International
Provided by IHS under license with ASME
No reproduction or networking permitted without license from IHS
Not for Resale

ASME B16.28 94 ■ 0759670 0550828 459 ■

ANNEX B
REFERENCES

(This Annex is an integral part of ASME B16.28-1994, and is placed after the main text for convenience.)

The following is a list of standards and specifications referenced in this Standard showing the year of approval.

ASME Publications (Approved as American National Standards)

ASME B16.25-1992	Buttwelding Ends
ASME B31	Code for Pressure Piping
ANSI/ASME B36.10M-1985	Welded and Seamless Wrought Steel Pipe
ASME Boiler and Pressure Vessel Code	Section I, Power Boilers Section II, Materials, Part A, Ferrous Material Specifications Section VIII, Pressure Vessels

ASTM Publications

ASTM A234M-92a	Piping Fittings of Wrought Carbon Steel and Alloy Steel for Moderate and Elevated Temperatures
ASTM A403M-91	Wrought Austenitic Stainless Steel Piping Fittings
ASTM A420M-92	Piping Fittings of Wrought Carbon Steel and Alloy Steel for Low-Temperature Service
ASTM E 29-93a	Using Significant Digits in Test Data to Determine Conformance with Specifications

Publications of the following organizations appear on the above list:

ASME	The American Society of Mechanical Engineers 345 East 47th Street, New York, New York 10017 ASME Order Department 22 Law Drive, Box 2300 Fairfield, New Jersey 07007-2300
ASTM	American Society for Testing and Materials 1916 Race Street, Philadelphia, Pennsylvania 19103

Publications appearing above which have been approved as American National Standards may also be obtained from:

ANSI	American National Standards Institute, Inc. 11 West 42nd Street, New York, New York 10036

Copyright ASME International
Provided by IHS under license with ASME
No reproduction or networking permitted without license from IHS

Not for Resale

AMERICAN NATIONAL STANDARDS FOR PIPING, PIPE FLANGES, FITTINGS, AND VALVES

Scheme for the Identification of Piping Systems ..... A13.1-1981(R1985)
Pipe Threads, General Purpose (Inch) ..... B1.20.1-1983(R1992)
Dryseal Pipe Threads (Inch) ..... B1.20.3-1976(R1991)
Cast Iron Pipe Flanges and Flanged Fittings B16.1-1989
Malleable Iron Threaded Fittings B16.3-1992
Gray Iron Threaded Fittings B16.4-1992
Pipe Flanges and Flanged Fittings B16.5-1988
Factory-Made Wrought Steel Buttwelding Fittings B16.9-1993
Face-to-Face and End-to-End Dimensions of Valves B16.10-1992
Forged Fittings, Socket-Welding and Threaded B16.11-1991
Cast Iron Threaded Drainage Fittings B16.12-1991
Ferrous Pipe Plugs, Bushings, and Locknuts with Pipe Threads B16.14-1991
Cast Bronze Threaded Fittings, Class 125 and 250 ..... B16.15-1985
Cast Copper Alloy Solder Joint Pressure Fittings B16.18-1984
Metallic Gaskets for Pipe Flanges — Ring-Joint, Spiral-Wound, and Jacketed B16.20-1993
Nonmetallic Flat Gaskets for Pipe Flanges B16.21-1992
Wrought Copper and Copper Alloy Solder Joint Pressure Fittings B16.22-1989
Cast Copper Alloy Solder Joint Drainage Fittings — DWV B16.23-1992
Cast Copper Alloy Pipe Flanges and Flanged Fittings, Class 150, 300, 400, 600, 900, 1500, and 2500 ..... B16.24-1991
Buttwelding Ends B16.25-1992
Cast Copper Alloy Fittings for Flared Copper Tubes B16.26-1988
Wrought Steel Buttwelding Short Radius Elbows and Returns B16.28-1994
Wrought Copper and Wrought Copper Alloy Solder Joint Drainage Fittings — DWV B16.29-1986
Cast Copper Alloy Solder Joint Fittings for Sovent Drainage Systems B16.32-1992
Manually Operated Metallic Gas Valves for Use in Gas Piping Systems Up to 125 psig (Sizes ½ Through 2) B16.33-1990
Valves — Flanged, Threaded, and Welding End B16.34-1988
Orifice Flanges B16.36-1988
Large Metallic Valves for Gas Distribution (Manually Operated, NPS 2½ to 12, 125 psig Maximum) ... B16.38-1985
Malleable Iron Threaded Pipe Unions, Classes 150, 250, and 300 ..... B16.39-1986
Manually Operated Thermoplastic Gas Shutoffs and Valves in Gas Distribution Systems B16.40-1985
Functional Qualification Requirements for Power Operated Active Valve Assemblies for Nuclear Power Plants ..... B16.41-1983(R1989)
Ductile Iron Pipe Flanges and Flanged Fittings, Class 150 and 300 ..... B16.42-1987
Wrought Copper and Copper Alloy Solder Joint Fittings for Sovent® Drainage Systems B16.43-1982
Cast Iron Fittings for Sovent® Drainage Systems B16.45-1987
Large Diameter Steel Flanges (NPS 26 Through NPS 60) B16.47-1990
Power Piping B31.1-1992
Fuel Gas Piping B31.2-1968
Chemical Plant and Petroleum Refinery Piping B31.3-1993
Liquid Transportation Systems for Hydrocarbons, Liquid Petroleum Gas, Anhydrous Ammonia, and Alcohols B31.4-1992
Refrigeration Piping B31.5-1992
Gas Transmission and Distribution Piping Systems B31.8-1992
Building Services Piping B31.9-1988
Slurry Transportation Piping Systems B31.11-1989
ASME Guide for Gas Transmission and Distribution Piping Systems — 1986 (not an ANSI Standard) .....
Manual for Determining the Remaining Strength of Corroded Pipelines (not an ANSI Standard) B31G-1991
Welded and Seamless Wrought Steel Pipe B36.10M-1985
Stainless Steel Pipe B36.19M-1985
Self-Operated and Power-Operated Safety-Related Valves Functional Specification Standard .. N278.1-1975(R1984)

The ASME Publications Catalog shows a complete list of all the Standards published by the Society. For a complimentary catalog, or the latest information about our publications, call 1-800-THE-ASME (1-800-843-2763).

Copyright ASME International
Provided by IHS under license with ASME
No reproduction or networking permitted without license from IHS

Not for Resale

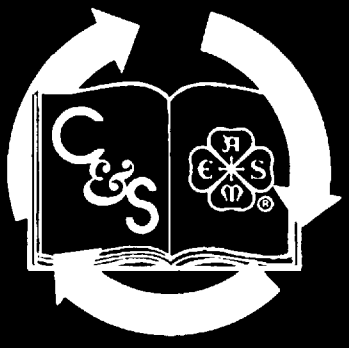

This document is printed
on 50% recycled paper.

ISBN #0-7918-2300-8

J11094

Copyright ASME International
Provided by IHS under license with ASME
No reproduction or networking permitted without license from IHS

Not for Resale