ASME B16.26-2006
(Revision of ASME/ANSI B16.26-1988)

Cast Copper Alloy Fittings for Flared Copper Tubes

AN AMERICAN NATIONAL STANDARD

The American Society of Mechanical Engineers

Copyright ASME International
Provided by IHS under license with ASME
No reproduction or networking permitted without license from IHS

Not for Resale

ASME B16.26-2006

(Revision of ASME/ANSI B16.26-1988)

Cast Copper Alloy Fittings for Flared Copper Tubes

AN AMERICAN NATIONAL STANDARD

The American Society of Mechanical Engineers

Three Park Avenue • New York, NY 10016

Copyright ASME International
Provided by IHS under license with ASME
No reproduction or networking permitted without license from IHS

Not for Resale

Date of Issuance: September 29, 2006

The next edition of this Standard is scheduled for publication in 2010. There will be no addenda issued to this edition.

ASME issues written replies to inquiries concerning interpretations of technical aspects of this Standard. Interpretations are published on the ASME website under the Committee Pages at http://www.asme.org/codes/ as they are issued, and will also be published within this edition of the standard.

ASME is the registered trademark of The American Society of Mechanical Engineers.

This code or standard was developed under procedures accredited as meeting the criteria for American National Standards. The Standards Committee that approved the code or standard was balanced to assure that individuals from competent and concerned interests have had an opportunity to participate. The proposed code or standard was made available for public review and comment that provides an opportunity for additional public input from industry, academia, regulatory agencies, and the public-at-large.

ASME does not "approve," "rate," or "endorse" any item, construction, proprietary device, or activity.

ASME does not take any position with respect to the validity of any patent rights asserted in connection with any items mentioned in this document, and does not undertake to insure anyone utilizing a standard against liability for infringement of any applicable letters patent, nor assume any such liability. Users of a code or standard are expressly advised that determination of the validity of any such patent rights, and the risk of infringement of such rights, is entirely their own responsibility.

Participation by federal agency representative(s) or person(s) affiliated with industry is not to be interpreted as government or industry endorsement of this code or standard.

ASME accepts responsibility for only those interpretations of this document issued in accordance with the established ASME procedures and policies, which precludes the issuance of interpretations by individuals.

No part of this document may be reproduced in any form,
in an electronic retrieval system or otherwise,
without the prior written permission of the publisher.

The American Society of Mechanical Engineers
Three Park Avenue, New York, NY 10016-5990

Copyright © 2006 by
THE AMERICAN SOCIETY OF MECHANICAL ENGINEERS
All rights reserved
Printed in U.S.A.

Copyright ASME International
Provided by IHS under license with ASME
No reproduction or networking permitted without license from IHS

Not for Resale

CONTENTS

Foreword iv
Committee Roster v
Correspondence With the B16 Committee vi

1 Scope 1

2 Pressure Rating 1

3 Size 1

4 Marking 1

5 Material 1

6 Dimensions 1

7 Threading 2

8 Hydrostatic Test 2

Tables

1 General Dimensions – Cast Copper Alloy Fittings for Flared Copper Tubes 3
2 Thread Specifications: External Threads on Fittings – Class 2A 4
3 Thread Specifications: Internal Threads on Nuts – Class 2B 4

Mandatory Appendices

I U.S. Customary Units 5
II References 7

Nonmandatory Appendices

A Flared Tube Dimensions 8
B Quality System Program 9

Copyright ASME International
Provided by IHS under license with ASME
No reproduction or networking permitted without license from IHS
Not for Resale

FOREWORD

The development of a standard for brass fittings for flared copper water tubes was initiated by a subcommittee of the Copper Tube and Fitting Manufacturers Standardization Committee in the year 1929. When a general agreement had been reached, the draft of the proposed standard was submitted to Sectional Committee A40 on Minimum Requirements for Plumbing and Standardization of Plumbing Equipment, of the American Standards Association. Sectional Committee A40 was jointly sponsored by the American Society of Sanitary Engineering and The American Society of Mechanical Engineers.

Final ASA approval and designation as an American Standard, ASA A40.2-1936, was granted January 20, 1936.

The Standard remained unchanged and without reaffirmation until 1955 when this activity was transferred from Sectional Committee A40 to Sectional Committee B16 on Standardization of Pipe Flanges and Fittings, under the sponsorship of The American Society of Mechanical Engineers, the Mechanical Contractors Association of America, Inc., and the Manufacturers Standardization Society of the Valve and Fittings Industry.

Subcommittee No. 9 B16 on Solder-Joint Fittings was instructed to develop a revised standard. The revised draft of this Standard was submitted to industry for criticism and comment. The final draft was approved by Sectional Committee B16 and its sponsors by letter ballot.

ASA approval and designation as ASA B16.26-1958 was granted on February 12, 1958. Beginning in 1965, consideration was given to reviewing the standard in light of progress made in the production of these fittings. Subcommittee No. 9 completed its work by recommending the updating of referenced standards and thread specifications, and including additional material. Following approval by the USA Standards Committee and Sponsors, the revision was approved by the new USA Standards Institute on April 21, 1967.

In 1982 American National Standards Committee B16 was reorganized as an ASME Committee operating under procedures accredited by ANSI. In this 1988 edition, metric units were omitted and references to other standards have been updated. Following approval by the B16 Main Committee and the ASME Supervisory Board, and after public review, the standard was approved as an American National Standard by ANSI on August 23, 1988.

This 2006 Edition includes metric units as the primary reference units while maintaining U.S. Customary units in either parenthetical or separate forms. The goal is to delete the U.S. Customary units when the standard is next issued. SI values were positioned in the main text; U.S. Customary values were positioned in Appendix I. The Scope was clarified and a section on hydrostatic testing was added, along with a quality assurance recommendation in Appendix B. Additional information concerning the design of the tube flare was also incorporated, in answer to user requests for such information, and is reported in Appendix A. Following approval by the B16 Main Committee and the ASME Supervisory Board and after public review, the standard was approved as an American National Standard by ANSI on May 23, 2006.

Requests for interpretations or suggestions for revisions should be sent to the Secretary, B16 Committee, The American Society of Mechanical Engineers, Three Park Avenue, New York, NY 10016-5990.

Copyright ASME International
Provided by IHS under license with ASME
No reproduction or networking permitted without license from IHS
Not for Resale

ASME B16 COMMITTEE
Standardization of Valves, Flanges, Fittings, and Gaskets

(The following is the roster of the Committee at the time of approval of this Standard.)

STANDARDS COMMITTEE OFFICERS

H. R. Sonderegger, *Chair*
M. L. Nayyar, *Vice Chair*
U. D'Urso, *Secretary*

STANDARDS COMMITTEE PERSONNEL

R. W. Barnes, Anric Enterprises, Inc.
W. B. Bedesem, Exxon Mobil Research and Engineering Co.
M. A. Clark, Nibco, Inc.
U. D'Urso, The American Society of Mechanical Engineers
C. E. Floren, Mueller Co.
D. R. Frikken, Becht Engineering, Co.
G. G. Grills, U.S. Coast Guard
M. L. Henderson, Forgital USA
G. A. Jolly, Vogt Valves/Flowserve
M. Katcher, Haynes International
W. N. McLean, Newco Valves
T. A. McMahon, Fisher Controls International, Inc.
M. L. Nayyar, Bechtel Power Corp.
J. D. Page, U.S. Nuclear Regulatory Commission
R. A. Schmidt, Trinity-Ladish
H. R. Sonderegger, Anvil International, Inc.
W. M. Stephan, Flexitallic LP
T. F. Stroud, Ductile Iron Pipe Research Association
D. A. Williams, Southern Company Services

SUBCOMMITTEE J — COPPER AND COPPER ALLOY FLANGES, FLANGED FITTINGS, AND SOLDER JOINT FITTINGS

M. A. Clark, *Chair,* Nibco, Inc.
A. G. Kireta, Jr., *Vice Chair,* Cooper Development Association, Inc.
S. Vasquez, *Secretary,* The American Society of Mechanical Engineers
J. A. Ballanco, JB Engineering and Code Consulting, PC
D. F. Buccicone, Elkhart Products Corp.
A. Ciechanowski, NSF International
D. R. Dole, Victaulic Company of America
D. R. Frikken, Becht Engineering, Co.
C. Geisthoff, Viega North America
T. L. Jamison, Mueller Industries, Inc.
A. A. Knapp, A. Knapp and Associates
P. B. Mace, Mueller Industries, Inc.
D. T. Peters, Consultant

Copyright ASME International
Provided by IHS under license with ASME
No reproduction or networking permitted without license from IHS
Not for Resale

CORRESPONDENCE WITH THE B16 COMMITTEE

General. ASME Standards are developed and maintained with the intent to represent the consensus of concerned interests. As such, users of this Standard may interact with the Committee by requesting interpretations, proposing revisions, and attending Committee meetings. Correspondence should be addressed to:

Secretary, B16 Standards Committee
The American Society of Mechanical Engineers
Three Park Avenue
New York, NY 10016-5990

Proposing Revisions. Revisions are made periodically to the Standard to incorporate changes that appear necessary or desirable, as demonstrated by the experience gained from the application of the Standard. Approved revisions will be published periodically.

The Committee welcomes proposals for revisions to this Standard. Such proposals should be as specific as possible, citing the paragraph number(s), the proposed wording, and a detailed description of the reasons for the proposal, including any pertinent documentation.

Interpretations. Upon request, the B16 Committee will render an interpretation of any requirement of the Standard. Interpretations can only be rendered in response to a written request sent to the Secretary of the B16 Standards Committee.

The request for interpretation should be clear and unambiguous. It is further recommended that the inquirer submit his/her request in the following format:

Subject:	Cite the applicable paragraph number(s) and the topic of the inquiry.
Edition:	Cite the applicable edition of the Standard for which the interpretation is being requested.
Question:	Phrase the question as a request for an interpretation of a specific requirement suitable for general understanding and use, not as a request for an approval of a proprietary design or situation. The inquirer may also include any plans or drawings, which are necessary to explain the question; however, they should not contain proprietary names or information.

Requests that are not in this format will be rewritten in this format by the Committee prior to being answered, which may inadvertently change the intent of the original request.

ASME procedures provide for reconsideration of any interpretation when or if additional information that might affect an interpretation is available. Further, persons aggrieved by an interpretation may appeal to the cognizant ASME Committee or Subcommittee. ASME does not "approve," "certify," "rate," or "endorse" any item, construction, proprietary device, or activity.

Attending Committee Meetings. The B16 Standards Committee regularly holds meetings, which are open to the public. Persons wishing to attend any meeting should contact the Secretary of the B16 Standards Committee.

Copyright ASME International
Provided by IHS under license with ASME
No reproduction or networking permitted without license from IHS
Not for Resale

CAST COPPER ALLOY FITTINGS FOR FLARED COPPER TUBES

1 SCOPE

1.1 General

This Standard establishes specifications for cast copper alloy fittings and nuts used with flared seamless copper tube conforming to ASTM B 88 (water and general plumbing systems). Included are requirements for the following:

(a) pressure rating
(b) size
(c) marking
(d) material
(e) dimensions
(f) threading
(g) hydrostatic testing

1.2 References

Codes, standards, and specifications, containing provisions to the extent referenced herein, constitute requirements of this Standard. These reference documents are listed in Mandatory Appendix II.

1.3 Convention

For the purpose of determining conformance with this Standard, the convention for fixing significant digits, where units or maximum or minimum values are specified, shall be "rounding off" as defined in ASTM E 29, Standard Practice for Using Significant Digits in Test Data to Determine Conformance with Specifications. This requires that an observed or calculated value be rounded off to the nearest unit in the last right-hand digit used for expressing the limit. Decimal values and tolerances do not imply a particular method of measurement.

1.4 Relevant Units

This Standard states values in both metric and U.S. Customary units. These systems of units are to be regarded separately as standard. Within the text, the U.S. Customary units are shown in parentheses or in separate tables. The values stated in each system are not exact equivalents; therefore, it is required that each system of units be used independently of the other. Combining values from the two systems constitutes nonconformance with the standard.

1.5 Quality Systems

Requirements relating to the product manufacturer's quality system programs are described in Nonmandatory Appendix B.

1.6 Service Conditions

Criteria for selection of materials suitable for particular fluid service are not within the scope of this Standard.

2 PRESSURE RATING

The fittings covered by this Standard are designed for a maximum cold water service-pressure of 1 200 kPa (175 psig).

3 SIZE

The sizes of the fittings shown in Table 1 (Table I-1) correspond to standard water tube size as defined in ASTM B 88.

4 MARKING

Each fitting shall be marked with the manufacturer's name or trademark and other applicable markings as required by MSS SP-25, Standard Marking System for Valves, Fittings, Flanges and Unions. Marking of fittings less than nominal size $\frac{1}{2}$ is optional.

5 MATERIAL

Castings shall be copper alloy produced to meet the following:

(a) the requirements of ASTM B 62, Standard Specification for Composition Bronze or Ounce Metal Castings, UNS C83600; or

(b) the chemical and tensile requirements of ASTM B 584, Standard Specification for Copper Alloy Sand Castings for General Applications, UNS C83800 or C84400, and in all other respects shall comply with the requirement of ASTM B 62.

6 DIMENSIONS

6.1 Fitting and Nut

The dimensions and tolerances of fittings and nuts shall be as shown in Table 1 (Table I-1). Design of the

--`,,```,,,,````-`-`,,`,,`,`,,`---

Copyright ASME International
Provided by IHS under license with ASME
No reproduction or networking permitted without license from IHS

Not for Resale

sealing surfaces of the fitting and nut shall be at the discretion of the manufacturer.

6.2 Tube Flare

Dimensions relating to the flared end of the tube are described in Nonmandatory Appendix A. SI units are shown in Table A-1 and U.S. Customary units are shown in Table A-2.

7 THREADING

Straight threads shall conform to ASME B1.1 Unified Inch Screw Threads (UN and UNR Thread Form) Class 2A external and Class 2B internal. The dimensions of straight threads are given in Tables 2 and 3 (Tables I-2 and I-3).

Taper pipe threads (NPT) shall conform to ANSI/ASME B1.20.1, Pipe Threads, General Purpose (Inch).

8 HYDROSTATIC TEST

Hydrostatic testing is not required.

Copyright ASME International
Provided by IHS under license with ASME
No reproduction or networking permitted without license from IHS
Not for Resale

Table 1 General Dimensions — Cast Copper Alloy Fittings for Flared Copper Tubes

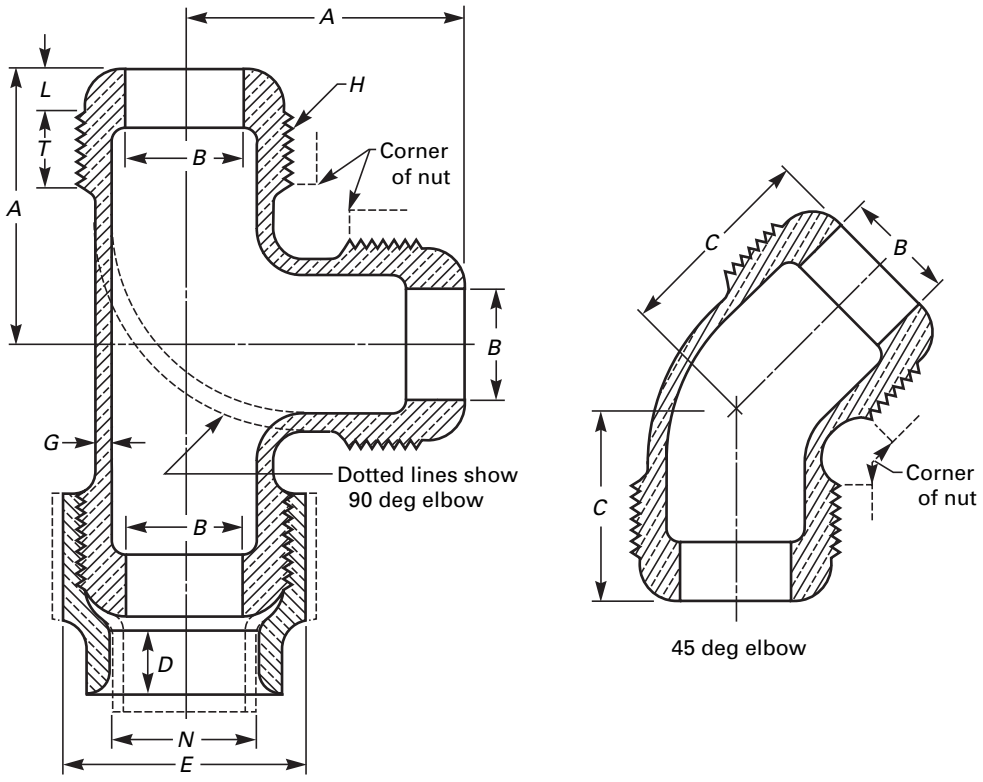

Standard Water Tube Size	Outside Diameter of Tube	Diameter of Fitting Bore, *B* [Note (1)]	Min. Center-to-Face, *A*	Minimum Center-to-Face of 45 deg Elbow, *C*	Length of Seat Projection, *L*	Minimum Metal Thickness, *G*	Diameter of Bore of Nut, *N*	Min. Length of Bore in Nut, *D*	Width Across Flats of Nut, *E*	Number of Flats on Nut
$\frac{3}{8}$	12.7	9.62	36	27.0	6.5	2.4	13.1	5.0	27.4	6
$\frac{1}{2}$	15.9	12.70	39	29.0	6.5	2.4	16.7	6.5	31.0	6
$\frac{3}{4}$	22.2	19.05	45	32.0	7.0	2.5	23.0	9.5	37.6	6
1	28.6	25.40	53	37.5	7.5	2.8	29.4	12.5	48.4	6
$1\frac{1}{4}$	34.9	31.75	58	40.0	8.0	3.2	35.7	16.0	54.8	8
$1\frac{1}{2}$	41.3	38.10	65	44.0	8.5	3.3	42.1	19.0	65.1	8
2	54.0	50.80	78	52.0	9.5	4.0	54.8	25.5	82.9	10

GENERAL NOTES:

(a) All dimensions are in millimeters.

(b) Nuts with 45 deg taper seat or convex curved seat are interchangeable on ball-joint fittings.

NOTE:

(1) Tolerance on diameter of bores through fitting and nut, all sizes, ±0.12 mm.

Copyright ASME International
Provided by IHS under license with ASME
No reproduction or networking permitted without license from IHS
Not for Resale

Table 2 Thread Specifications: External Threads on Fittings — Class 2A

Standard Water Tube Size	Thread Designation, *H*	Length of Thread, *T*	Major Diameter		Pitch Diameter		Maximum Minor Diameter
			Max.	Min.	Max.	Min.	
3/8	7/8–14 UNF	11.0	22.184	21.923	21.005	20.869	19.959
1/2	1–14 UNS	11.0	25.356	25.096	24.178	24.037	23.131
3/4	1 1/4–14 UNS	12.5	31.709	31.448	30.530	30.394	29.484
1	1 5/8–12 UNS	14.0	41.229	40.940	39.855	39.706	38.663
1 1/4	1 7/8–12 UN	15.5	47.579	47.290	46.205	46.053	44.983
1 1/2	2 1/4–12 UN	17.5	57.104	56.815	55.730	55.576	54.508
2	2 7/8–12 UN	20.5	72.976	72.688	71.602	71.443	70.380

GENERAL NOTE: All dimensions are in millimeters, except thread designation.

Table 3 Thread Specifications: Internal Threads on Nuts — Class 2B

Standard Water Tube Size	Thread Designation, *H*	Length of Thread, *T*	Maximum Major Diameter	Pitch Diameter		Minor Diameter	
				Max.	Min.	Max.	Min.
3/8	7/8–14 UNF	11.0	22.225	21.224	21.047	20.68	20.27
1/2	1–14 UNS	11.0	25.400	24.406	24.222	23.82	23.44
3/4	1 1/4–14 UNS	12.5	31.750	30.749	30.572	30.18	29.79
1	1 5/8–12 UNS	14.0	41.275	40.093	39.901	39.45	38.99
1 1/4	1 7/8–12 UN	15.5	47.625	46.448	46.251	45.80	45.34
1 1/2	2 1/4–12 UN	17.5	57.150	55.976	55.776	55.32	54.86
2	2 7/8–12 UN	20.5	73.025	71.869	71.651	71.20	70.74

GENERAL NOTE: All dimensions are in millimeters, except thread designation.

Copyright ASME International
Provided by IHS under license with ASME
No reproduction or networking permitted without license from IHS
Not for Resale

MANDATORY APPENDIX I
U.S. CUSTOMARY UNITS

Table I-1 General Dimensions — Cast Copper Alloy Fittings for Flared Copper Tubes

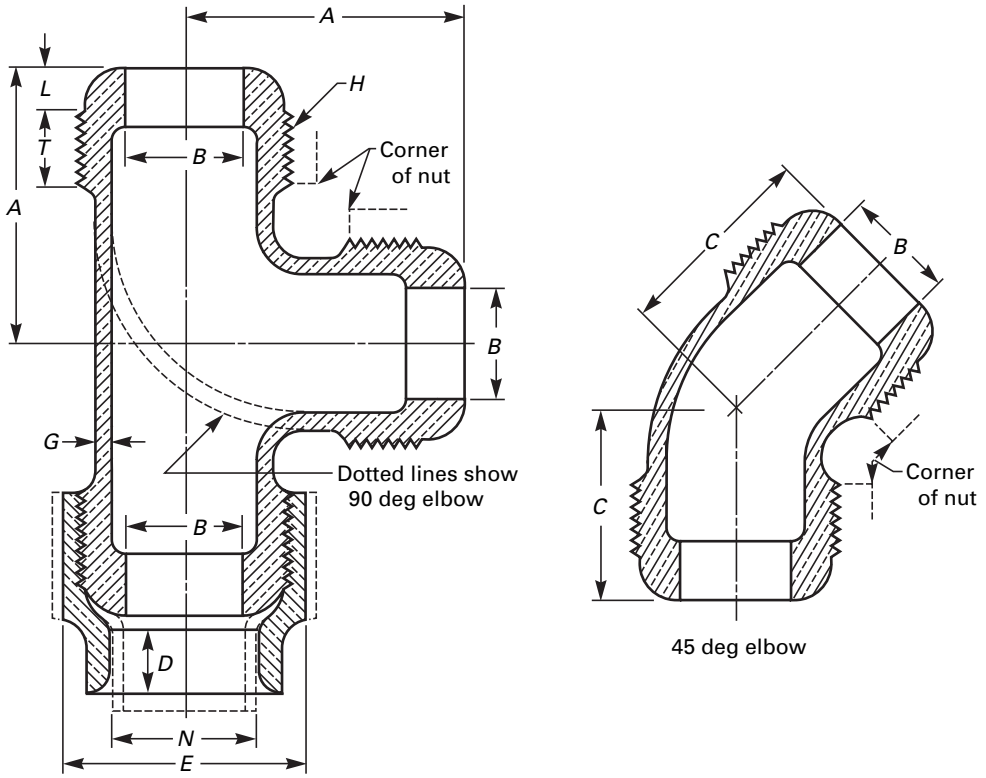

Standard Water Tube Size	Outside Diameter of Tube	Diameter of Fitting Bore, *B* [Note (1)]	Min. Center-to-Face, *A*	Minimum Center-to-Face of 45 deg Elbow, *C*	Length of Seat Projection, *L*	Minimum Metal Thickness, *G*	Diameter of Bore of Nut, *N* [Note (1)]	Min. Length of Bore in Nut, *D*	Width Across Flats of Nut, *E*	Number of Flats on Nut
3/8	0.50	0.375	1.42	1.06	0.25	0.09	0.52	0.19	1.08	6
1/2	0.62	0.500	1.53	1.12	0.26	0.09	0.65	0.25	1.22	6
3/4	0.88	0.750	1.78	1.26	0.28	0.10	0.90	0.38	1.48	6
1	1.12	1.000	2.09	1.44	0.30	0.11	1.15	0.50	1.90	6
1 1/4	1.38	1.250	2.28	1.56	0.32	0.12	1.41	0.63	2.16	8
1 1/2	1.62	1.500	2.56	1.75	0.34	0.13	1.66	0.75	2.56	8
2	2.12	2.000	3.06	2.06	0.38	0.15	2.16	1.00	3.26	10

GENERAL NOTES:

(a) All dimensions are in inches.

(b) Nuts with 45 deg taper seat or convex curved seat are interchangeable on ball-joint fittings.

NOTE:

(1) Tolerance on diameter of bores through fitting and nut, all sizes, ±0.005 in.

Copyright ASME International
Provided by IHS under license with ASME
No reproduction or networking permitted without license from IHS
Not for Resale

Table I-2 Thread Specifications: External Threads on Fittings — Class 2A

Standard Water Tube Size	Thread Designation, *H*	Length of Thread, *T*	Major Diameter		Pitch Diameter		Maximum Minor Diameter
			Max.	Min.	Max.	Min.	
3/8	7/8–14 UNF	0.43	0.8734	0.8631	0.8270	0.8216	0.7858
1/2	1–14 UNS	0.43	0.9983	0.9880	0.9519	0.9463	0.9107
3/4	1 1/4–14 UNS	0.50	1.2484	1.2381	1.2020	1.1966	1.1608
1	1 5/8–12 UNS	0.56	1.6232	1.6118	1.5691	1.5632	1.5210
1 1/4	1 7/8–12 UN	0.62	1.8732	1.8618	1.8191	1.8131	1.7710
1 1/2	2 1/4–12 UN	0.69	2.2482	2.2368	2.1941	2.1880	2.1460
2	2 7/8–12 UN	0.81	2.8731	2.8617	2.8190	2.8127	2.7709

GENERAL NOTE: All dimensions are in inches, except thread designation.

Table I-3 Thread Specifications: Internal Threads on Nuts — Class 2B

Standard Water Tube Size	Thread Designation, *H*	Length of Thread, *T*	Maximum Major Diameter	Pitch Diameter		Minor Diameter	
				Max.	Min.	Max.	Min.
3/8	7/8–14 UNF	0.43	0.8750	0.8356	0.8286	0.814	0.798
1/2	1–14 UNS	0.43	1.000	0.9609	0.9536	0.938	0.923
3/4	1 1/4–14 UNS	0.50	1.2500	1.2106	1.2036	1.188	1.173
1	1 5/8–12 UNS	0.56	1.6250	1.5785	1.5709	1.553	1.535
1 1/4	1 7/8–12 UN	0.62	1.8750	1.8287	1.8209	1.803	1.785
1 1/2	2 1/4–12 UN	0.69	2.2500	2.2038	2.1959	2.178	2.160
2	2 7/8–12 UN	0.81	2.8750	2.8291	2.8209	2.803	2.785

GENERAL NOTE: All dimensions are in inches, except thread designation.

Copyright ASME International
Provided by IHS under license with ASME
No reproduction or networking permitted without license from IHS
Not for Resale

MANDATORY APPENDIX II
REFERENCES

The following is a list of publications referenced in this Standard.

ASME B1.1-2003, Unified Inch Screw Threads (UN and UNR Thread Form)[1]

ASME B1.20.1-1983(R2001), Pipe Threads, General Purpose (Inch)[1]

Publisher: The American Society of Mechanical Engineers (ASME), Three Park Avenue, New York, NY 10016-5990; Order Department: 22 Law Drive, P.O. Box 2300, Fairfield, NJ 07007-2300

ASTM B 62-02, Standard Specification for Composition Bronze or Ounce Metal Castings

ASTM B 88-03, Standard Specification for Seamless Copper Water Tube

ASTM B 584-04 Standard Specification for Copper Alloy Sand Castings for General Applications

E 29-04 Standard Practice for Using Significant Digits in Test Data to Determine Conformance With Specifications

Publisher: ASTM International (ASTM), 100 Barr Harbor Drive, P.O. Box C700, West Conshohocken, PA 19428-2959

ISO 9000: 2000, Quality Management Systems – Fundamentals and Vocabulary

ISO 9001: 2000, Quality Management Systems – Requirements

ISO 9004: 2000, Quality Management Systems – Guidelines for Performance Improvements

Publisher: International Organization for Standardization (ISO), 1 rue de Varembé, Case Postale 56, CH-1211, Genève 20, Switzerland/Suisse

SP-25-1998, Standard Marking System for Valves, Fittings, Flanges and Unions

Publisher: Manufacturers Standardization Society of the Valve and Fittings Industry, Inc. (MSS), 127 Park Street, NE, Vienna, VA 22180-4602

[1] May also be obtained from American National Standards Institute (ANSI), 25 West 43rd Street, New York, NY 10036.

Copyright ASME International
Provided by IHS under license with ASME
No reproduction or networking permitted without license from IHS
Not for Resale

NONMANDATORY APPENDIX A
FLARED TUBE DIMENSIONS

Table A-1 Flared Tube Dimensions (SI)

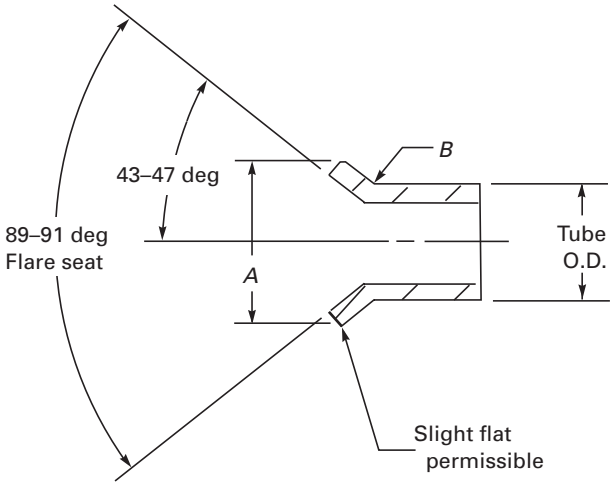

Standard Water Tube Size	Outside Diameter of Tube	Minimum Flared Tube Diameter, *A*	Maximum Flared Tube Diameter, *A*	Flare Radius, *B*, ±0.3
3/8	12.7	16	17	0.5
1/2	15.9	19	20	0.5
3/4	22.2	26	27	0.5
1	28.6	33	34	0.5
1 1/4	34.9	40	41	0.5
1 1/2	41.3	48	49	0.5
2	54.0	62	63	0.5

GENERAL NOTES:

(a) All dimensions are in millimeters.

(b) Considerations such as the effects of wall thickness on working pressures, length of thread engagements, etc., shall be the responsibility of the user.

Table A-2 Flared Tube Dimensions (Customary)

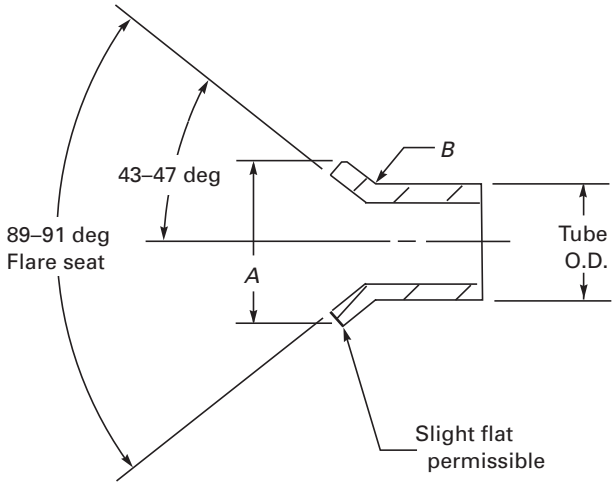

Standard Water Tube Size	Outside Diameter Tube	Minimum Flared Tube Diameter, *A*	Maximum Flared Tube Diameter, *A*	Flare Radius, *B*, ±0.01
3/8	0.50	0.63	0.67	0.02
1/2	0.62	0.75	0.79	0.02
3/4	0.88	1.01	1.05	0.02
1	1.12	1.31	1.35	0.02
1 1/4	1.50	1.56	1.60	0.02
1 1/2	1.62	1.87	1.91	0.02
2	2.12	2.44	2.48	0.02

GENERAL NOTES:

(a) All dimensions are in inches.

(b) Considerations such as the effects of wall thickness on working pressures, length of thread engagements, etc., shall be the responsibility of the user.

Copyright ASME International
Provided by IHS under license with ASME
No reproduction or networking permitted without license from IHS
Not for Resale

NONMANDATORY APPENDIX B
QUALITY SYSTEM PROGRAM

The products manufactured in accordance with this Standard shall be produced under ISO 9001.[1] A determination of the need for registration and/or certification of the product manufacturer's quality system program by an independent organization shall be the responsibility of the manufacturer. The detailed documentation demonstrating program compliance shall be available to the purchaser at the manufacturer's facility. A written summary description of the program utilized by the product manufacturer shall be available to the purchaser upon request. The product manufacturer is defined as the entity whose name or trademark appears on the product in accordance with the marking or identification requirements of this Standard.

[1] ISO 9001 is also available from the American National Standards Institute (ANSI) and the American Society for Quality (ASQ) as American National Standards that are identified by a prefix "Q" replacing the prefix "ISO." ISO 9001 is listed in Mandatory Appendix II.

--`,,```,,,,````-`-`,,`,,`,`,,`---

Copyright ASME International
Provided by IHS under license with ASME
No reproduction or networking permitted without license from IHS

Not for Resale

B16 AMERICAN NATIONAL STANDARDS FOR PIPING, PIPE FLANGES, FITTINGS, AND VALVES

Scheme for the Identification of Piping Systems A13.1-1996 (R2002)
Pipe Threads, General Purpose (Inch) B1.20.1-1983 (R2001)
Dryseal Pipe Threads (Inch) B1.20.3-1976 (R2003)
Gray Iron Pipe Flanges and Flanged Fittings (Classes 25, 125, and 250) B16.1-2005
Malleable Iron Threaded Fittings: Classes 150 and 300 ..... B16.3-1998
Gray Iron Threaded Fittings: Classes 125 and 250 ..... B16.4-1998
Pipe Flanges and Flanged Fittings NPS $\frac{1}{2}$ Through NPS 24 Metric/Inch Standard B16.5-2003
Factory-Made Wrought Buttwelding Fittings B16.9-2003
Face-to-Face and End-to-End Dimensions of Valves B16.10-2000 (R2003)
Forged Fittings, Socket-Welding and Threaded B16.11-2005
Cast Iron Threaded Drainage Fittings B16.12-1998
Ferrous Pipe Plugs, Bushings, and Locknuts with Pipe Threads B16.14-1991
Cast Bronze Threaded Fittings: Classes 125 and 250 ..... B16.15-1985 (R2004)
Cast Copper Alloy Solder Joint Pressure Fittings B16.18-2001
Metallic Gaskets for Pipe Flanges: Ring-Joint, Spiral-Wound, and Jacketed B16.20-1998 (R2004)
Nonmetallic Flat Gaskets for Pipe Flanges B16.21-2005
Wrought Copper and Copper Alloy Solder Joint Pressure Fittings B16.22-2001
Cast Copper Alloy Solder Joint Drainage Fittings: DWV B16.23-2002
Cast Copper Alloy Pipe Flanges and Flanged Fittings: Class 150, 300, 400, 600, 900, 1500, and 2500 ..... B16.24-2001
Buttwelding Ends B16.25-2003
Cast Copper Alloy Fittings for Flared Copper Tubes B16.26-2006
Wrought Steel Buttwelding Short Radius Elbows and Returns B16.28-1994
Wrought Copper and Wrought Copper Alloy Solder Joint Drainage Fittings — DWV B16.29-2001
Manually Operated Metallic Gas Valves for Use in Gas Piping Systems up to 125 PSI (Sizes NPS $\frac{1}{2}$ Through NPS 2) B16.33-2002
Valves — Flanged, Threaded, and Welding End B16.34-2004
Orifice Flanges B16.36-1996
Large Metallic Valves for Gas Distribution (Manually Operated, NPS $2\frac{1}{2}$ to 12, 125 psig Maximum) B16.38-1985 (R2005)
Malleable Iron Threaded Pipe Unions: Classes 150, 250, and 300 ..... B16.39-1998
Manually Operated Thermoplastic Gas Shutoffs and Valves in Gas Distribution Systems B16.40-2002
Functional Qualification Requirements for Power Operated Active Valve Assemblies for Nuclear Power Plants B16.41-1983 (R1989)
Ductile Iron Pipe Flanges and Flanged Fittings: Classes 150 and 300 ..... B16.42-1998
Manually Operated Metallic Gas Valves for Use in Aboveground Piping Systems Up To 5 PSI B16.44-2002
Cast Iron Fittings for Sovent® Drainage Systems B16.45-1998
Large Diameter Steel Flanges (NPS 26 Through NPS 60) B16.47-1996
Line Blanks B16.48-2005
Factory-Made Wrought Steel Buttwelding Induction Bends for Transportation and Distribution Systems B16.49-2000
Wrought Copper and Copper Alloy Braze-Joint Pressure Fittings B16.50-2001
Power Piping B31.1-2004
Fuel Gas Piping B31.2-1968
Process Piping B31.3-2004
Pipeline Transportation Systems for Liquid Hydrocarbons and Other Liquids B31.4-2002
Refrigeration Piping and Heat Transfer Components B31.5-2001
Gas Transmission and Distribution Piping Systems B31.8-2003
Building Services Piping B31.9-2004
Slurry Transportation Piping Systems B31.11-2002
Manual for Determining the Remaining Strength of Corroded Pipelines B31G-1991 (R2004)
Welded and Seamless Wrought Steel Pipe B36.10M-2004
Stainless Steel Pipe B36.19M-2004
Self-Operated and Power-Operated Safety-Related Valves Functional Specification Standard N278.1-1975 (R1992)

The ASME Publications Catalog shows a complete list of all the Standards published by the Society. For a complimentary catalog, or the latest information about our publications, call 1-800-THE-ASME (1-800-843-2763).

Copyright ASME International
Provided by IHS under license with ASME
No reproduction or networking permitted without license from IHS
Not for Resale

ASME B16.26-2006

ISBN 0-7918-3023-3





J00806

--`,,```,,,,````-`-`,,`,,`,`,,`---

Copyright ASME International
Provided by IHS under license with ASME
No reproduction or networking permitted without license from IHS

Not for Resale