ASME B16.25-2003
(Revision of ASME B16.25-1997)

Buttwelding Ends

AN AMERICAN NATIONAL STANDARD

The American Society of Mechanical Engineers

Copyright ASME International
Provided by IHS under license with ASME
No reproduction or networking permitted without license from IHS

Not for Resale

ASME B16.25-2003
(Revision of ASME B16.25-1997)

BUTTWELDING ENDS

AN AMERICAN NATIONAL STANDARD



The American Society of Mechanical Engineers

Three Park Avenue • New York, NY 10016

--`,,```,,,,````-`-`,,`,,`,`,,`---

Copyright ASME International
Provided by IHS under license with ASME
No reproduction or networking permitted without license from IHS

Not for Resale

Date of Issuance: November 30, 2004

The next edition of this Standard is scheduled for publication in 2008. There will be no addenda issued to this edition.

ASME issues written replies to inquiries concerning interpretations of technical aspects of this Standard. Interpretations are published on the ASME Web site under the Committee Pages at http://www.asme.org/codes/ as they are issued, and will also be published within the next edition of the Standard.

ASME is the registered trademark of The American Society of Mechanical Engineers.

This code or standard was developed under procedures accredited as meeting the criteria for American National Standards. The Standards Committee that approved the code or standard was balanced to assure that individuals from competent and concerned interests have had an opportunity to participate. The proposed code or standard was made available for public review and comment that provides an opportunity for additional public input from industry, academia, regulatory agencies, and the public-at-large.

ASME does not "approve," "rate," or "endorse" any item, construction, proprietary device, or activity.

ASME does not take any position with respect to the validity of any patent rights asserted in connection with any items mentioned in this document, and does not undertake to insure anyone utilizing a standard against liability for infringement of any applicable letters patent, nor assume any such liability. Users of a code or standard are expressly advised that determination of the validity of any such patent rights, and the risk of infringement of such rights, is entirely their own responsibility.

Participation by federal agency representative(s) or person(s) affiliated with industry is not to be interpreted as government or industry endorsement of this code or standard.

ASME accepts responsibility for only those interpretations of this document issued in accordance with the established ASME procedures and policies, which precludes the issuance of interpretations by individuals.

No part of this document may be reproduced in any form,
in an electronic retrieval system or otherwise,
without the prior written permission of the publisher.

The American Society of Mechanical Engineers
Three Park Avenue, New York, NY 10016-5990

Copyright © 2004 by
THE AMERICAN SOCIETY OF MECHANICAL ENGINEERS
All rights reserved
Printed in U.S.A.

--`,,```,,,,````-`-`,,`,,`,`,,`---

Copyright ASME International
Provided by IHS under license with ASME
No reproduction or networking permitted without license from IHS

Not for Resale

CONTENTS

Foreword iv
Committee Roster v
Correspondence With the B16 Committee vi

1 Scope 1

2 Transition Contours 1

3 Welding Bevel Design 1

4 Preparation of Inside Diameter of Welding End 3

5 Tolerances 6

Figures

1 Maximum Envelope for Welding End Transitions 2
2 Bevels for Wall Thickness Over 3 mm (0.12 in.) to 22 mm (0.88 in.), Inclusive 4
3 Weld Bevel Details for Wall Thickness Over 22 mm (0.88 in.) 5
4 Weld Bevel Details for GTAW Root Pass [Wall Thickness Over 3 mm (0.12 in.) to 10 mm (0.38 in.), Inclusive] 6
5 Weld Bevel Details for GTAW Root Pass [Wall Thickness Over 10 mm (0.38 in.) to 25 mm (1.0 in.), Inclusive] 6
6 Weld Bevel Details for GTAW Root Pass [Wall Thickness Over 25 mm (1.0 in.)] 7

Table

1 Dimensions of Welding Ends 8

Mandatory Appendices

I Inch Table 11
II References 15

Nonmandatory Appendix

A Quality System Program 16

Copyright ASME International
Provided by IHS under license with ASME
No reproduction or networking permitted without license from IHS
Not for Resale

FOREWORD

In July 1953, the American Welding Society presented a proposal on Welding End Preparation to Sectional Committee B16 of the American Standards Association (ASA), with the recommendation that it be considered as a candidate American Standard. The proposal was expanded to include welding preparation for flanges and valves covered by ASA B16.5, Steel Pipe Flanges and Flanged Fittings, and for fittings covered by ASA B16.9, Buttwelding Fittings. Consideration was also given to Pipe Fabrication Institute Standard ES-1.

The third draft reviewed by Subcommittee 3, Subgroup 6 (now Subcommittee F) of the B16 Sectional Committee was forwarded to the Committee, to the cosponsor organizations, and then to ASA for approval. Final approval was given on September 14, 1955, with the designation ASA B16.25–1955.

Revisions were developed as need for clarification and improvement became known, and were approved as ASA B16.25–1958 and ASA B16.25–1964. After ASA reorganized as the American National Standards Institute (ANSI) and the Sectional Committee became American National Standards Committee B16, a further revision was approved as ANSI B16.25–1972.

Subcommittee F immediately began work on a major expansion and updating of the standard, adding illustrations and requirements for welding end configurations applicable to a number of specific circumstances, including cast steel and alloy valves. When a draft had been developed that overcame the many problems and conflicting demands, the Standards Committee, cosecretariat organizations, and ANSI concurred in approval of ANSI B16.25–1979 on July 18, 1979.

In 1982, American National Standards Committee B16 was reorganized as an ASME Committee operating under procedures accredited by ANSI. In the 1986 edition, inch dimensions were established as the standard and numerous changes in text and format were made. Notes for illustrations were also clarified. Following approval by the Standards Committee and ASME, approval as American National Standard was given by ANSI on October 8, 1986, with the new designation ASME/ANSI B16.25–1986.

In 1992, the subcommittee revised the requirements for the preparation of the inside diameter of welding end. The references in Annex B were also updated. After public review and approval by ASME, this edition was approved by ANSI on October 26, 1992, with the new designation ASME B16.25–1992.

In the 1997 Edition, metric dimensions were added as an independent but equal standard to the inch units. An Annex was also added to reference quality system requirements. Following approval by the Standards Committee and ASME, this revision to the 1992 edition of B16.25 was approved as an American National Standard by ANSI on April 17, 1997, with the new designation ASME B16.25–1997.

In this 2003 Edition, the reference standard dates were updated. There were clarifications to text made to address inquiries. Tolerances on bevel angles were modified slightly. Following approval by the Standards Committee and ASME, this revision of the 1997 edition of B16.25 was approved as an American National Standard by ANSI on December 17, 2003, with the new designation ASME B16.25-2003.

Requests for interpretation or suggestions for revision should be sent to the Secretary, B16 Committee, The American Society of Mechanical Engineers, Three Park Avenue, New York, NY 10016-5990.

Copyright ASME International
Provided by IHS under license with ASME
No reproduction or networking permitted without license from IHS
Not for Resale

ASME B16 STANDARDS COMMITTEE
Standardization of Valves, Flanges, Fittings, and Gaskets

(The following is the roster of the Committee at the time of approval of this Standard.)

OFFICERS

H. R. Sonderegger, *Chair*
M. L. Nayyar, *Vice Chair*
P. A. Reddington, *Secretary*

COMMITTEE PERSONNEL

W. B. Bedesem, ExxonMobil Research and Engineering Co.
M. A. Clark, Nibco, Inc.
A. Cohen, Arthur Cohen & Associates
C. E. Floren, Mueller Co.
D. R. Frikken, Consultant
A. Hamilton, ABS Americas
M. L. Henderson, Forgital USA
G. A. Jolly, Vogt Valves/Flowserve
M. Katcher, Haynes International
W. G. Knecht, Consultant
R. Koester, The William Powell Co.
R. D. Manning, U.S. Coast Guard
W. N. McLean, Newco Valves
T. A. McMahon, Fisher Controls International, Inc.
M. L. Nayyar, Bechtel Power Corp.
J. D. Page, U.S. Regulatory Commission
P. A. Reddington, The American Society of Mechanical Engineers
R. A. Schmidt, Trinity-Ladish
H. R. Sonderegger, Anvil International, Inc.
W. M. Stephan, Flexitallic LP
T. F. Stroud, Ductile Iron Pipe Research Association
R. E. White, Richard E. White & Associates PC
D. A. Williams, Southern Company Services

B16 SUBCOMMITTEE F PERSONNEL

G. A. Jolly, *Chair,* Vogt Valves/Flowserve
P. A. Reddington, *Secretary,* The American Society of Mechanical Engineers
A. Appleton, Alloy Stainless Product Company, Inc.
G. A. Cuccio, Capital Manufacturing Co.
J. P. Ellenberger, WFI International
D. R. Frikken, Consultant
R. E. Johnson, Consultant
R. C. Lafferty, Penna Machine Works, Inc.
D. C. Monroe, Consultant
R. A. Schmidt, Trinity-Ladish
H. R. Sonderegger, Anvil International, Inc.
K. Umemura, Japan Fittings Association

Copyright ASME International
Provided by IHS under license with ASME
No reproduction or networking permitted without license from IHS
Not for Resale

CORRESPONDENCE WITH THE B16 COMMITTEE

General. ASME Standards are developed and maintained with the intent to represent the consensus of concerned interests. As such, users of this Standard may interact with the Committee by requesting interpretations, proposing revisions, and attending Committee meetings. Correspondence should be addressed to:

Secretary, B16 Standards Committee
The American Society of Mechanical Engineers
Three Park Avenue
New York, NY 10016-5990

Proposing Revisions. Revisions are made periodically to the Standard to incorporate changes that appear necessary or desirable, as demonstrated by the experience gained from the application of the Standard. Approved revisions will be published periodically.

The Committee welcomes proposals for revisions to this Standard. Such proposals should be as specific as possible, citing the paragraph number(s), the proposed wording, and a detailed description of the reasons for the proposal, including any pertinent documentation.

Interpretations. Upon request, the B16 Committee will render an interpretation of any requirement of the Standard. Interpretations can only be rendered in response to a written request sent to the Secretary of the B16 Standards Committee.

The request for interpretation should be clear and unambiguous. It is further recommended that the inquirer submit his/her request in the following format:

Subject:	Cite the applicable paragraph number(s) and the topic of the inquiry.
Edition:	Cite the applicable edition of the Standard for which the interpretation is being requested.
Question:	Phrase the question as a request for an interpretation of a specific requirement suitable for general understanding and use, not as a request for an approval of a proprietary design or situation. The inquirer may also include any plans or drawings, which are necessary to explain the question; however, they should not contain proprietary names or information.

Requests that are not in this format will be rewritten in this format by the Committee prior to being answered, which may inadvertently change the intent of the original request.

ASME procedures provide for reconsideration of any interpretation when or if additional information that might affect an interpretation is available. Further, persons aggrieved by an interpretation may appeal to the cognizant ASME Committee or Subcommittee. ASME does not "approve," "certify," "rate," or "endorse" any item, construction, proprietary device, or activity.

Attending Committee Meetings. The B16 Standards Committee regularly holds meetings, which are open to the public. Persons wishing to attend any meeting should contact the Secretary of the B16 Standards Committee.

Copyright ASME International
Provided by IHS under license with ASME
No reproduction or networking permitted without license from IHS
Not for Resale

BUTTWELDING ENDS

1 SCOPE

1.1 General

This Standard covers the preparation of buttwelding ends of piping components to be joined into a piping system by welding. It includes requirements for welding bevels, for external and internal shaping of heavy-wall components, and for preparation of internal ends (including dimensions and tolerances). Coverage includes preparation for joints with the following:

(a) no backing rings
(b) split or noncontinuous backing rings
(c) solid or continuous backing rings
(d) consumable insert rings
(e) gas tungsten arc welding (GTAW) of the root pass.

Details of preparation for any backing ring must be specified when ordering the component.

1.2 Application

This Standard applies to any metallic materials for which a welding procedure can be satisfactorily qualified, but does not prescribe specific welding processes or procedures. Unless otherwise specified by the purchaser, it does not apply to welding ends conforming to ASME B16.5 or B16.9.

1.3 Standard Units

The values stated in either metric or inch units are to be regarded separately as standard. Within the text, the inch units are shown in parentheses. The values stated in each system are not exact equivalents; therefore, each system must be used independently of the other. Combining values from the two systems may result in nonconformance with the Standard.

1.4 Size

NPS, followed by a dimensionless number, is the designation for nominal fitting size. NPS is related to the reference nominal diameter, DN, used in international standards. The relationship is typically as follows:

NPS	DN
½	15
¾	20
1	25
1¼	32
1½	40
2	50
2½	65
3	80
4	100

For NPS ≥ 4, the related DN is: DN = 25 × NPS

1.5 Referenced Standards

Standards and specifications adopted by reference in this Standard are shown in Mandatory Appendix II, which is part of this Standard. It is not considered practical to identify the specific edition of each standard and specification in the individual references; instead, the specific edition is identified in Mandatory Appendix II. An end preparation made in conformance to this Standard in all other respects will be considered to be in conformance to the Standard even though the edition reference may be changed in a revision of the Standard.

1.6 Quality Systems

Nonmandatory requirements relating to the manufacturer's quality system program are described in Nonmandatory Appendix A.

1.7 Convention

For the purpose of determining conformance with this Standard, the convention for fixing significant digits where limits, maximum or minimum values, are specified shall be "rounding off" as defined in ASTM Practice E 29. This requires that an observed or calculated value shall be rounded off to the nearest unit in the last right-hand digit used for expressing the limit. Decimal values and tolerances do not imply a particular method of measurement.

2 TRANSITION CONTOURS

Figure 1 delineates the maximum envelope in which transitions from welding bevel to the outer surface of the component and from the root face to the inner surface of the component must lie. Except as specified in Note (5) to Fig. 1 and as otherwise specified by the purchaser, the exact contour within this envelope is the manufacturer's option, providing it maintains the specified minimum wall thickness, has no slopes steeper than those indicated for the respective regions, and includes the proper surface for backing rings if specified.

3 WELDING BEVEL DESIGN

3.1 Bevels for Other Than GTAW Root Pass

(a) Components having nominal wall thicknesses of 3 mm (0.12 in.) and less shall have ends cut square or slightly chamfered.

--`,,```,,,,````-`-`,,`,,`,`,,`---

Copyright ASME International
Provided by IHS under license with ASME
No reproduction or networking permitted without license from IHS

Not for Resale

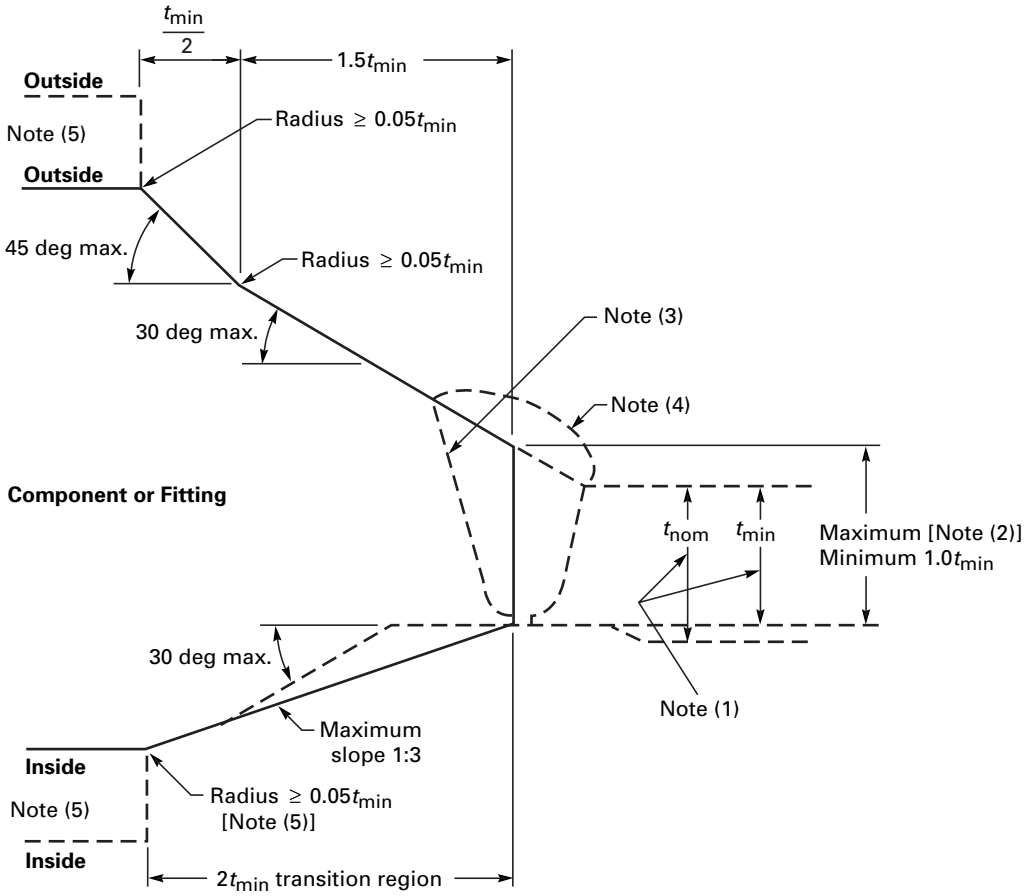

NOTES:

(1) The value of t_{min} is whichever of the following is applicable:
(a) the minimum ordered wall thickness of the pipe to include pipe that is purchased to a nominal wall thickness with an under-tolerance other than 12.5%
(b) 0.875 times the nominal wall thickness of pipe ordered to a pipe schedule wall thickness that has an under-tolerance of 12.5%
(c) the minimum ordered wall thickness of the cylindrical welding end of a component or fitting (or the thinner of the two) when the joint is between two components

(2) The maximum thickness at the end of the components is:
(a) the greater of t_{min} + 4 mm (0.16 in.) or $1.15t_{min}$ when ordered on a minimum wall basis
(b) the greater of t_{min} + 4 mm (0.16 in.) or $1.10t_{nom}$ when ordered on a nominal wall basis

(3) Weld bevel shown is for illustration only.

(4) The weld reinforcement permitted by applicable code may lie outside the maximum envelope.

(5) Where transitions using maximum slope do not intersect inside or outside surface, as shown by phantom outlines, maximum slopes shown or alternate radii shall be used.

Fig. 1 Maximum Envelope for Welding End Transitions

Copyright ASME International
Provided by IHS under license with ASME
No reproduction or networking permitted without license from IHS
Not for Resale

(b) Components having nominal wall thicknesses over 3 mm (0.12 in.) to 22 mm (0.88 in.) inclusive shall have single angle bevels as illustrated in Fig. 2.

(c) Components having nominal wall thicknesses greater than 22 mm (0.88 in.) shall have compound angle bevels as illustrated in Fig. 3.

3.2 Bevels for GTAW Root Pass

(a) Components having nominal wall thicknesses of 3 mm (0.12 in.) and less shall have ends cut square or slightly chamfered.

(b) Components having nominal wall thicknesses over 3 mm (0.12 in.) to 10 mm (0.38 in.) inclusive shall have $37\frac{1}{2}$ deg $\pm$ $2\frac{1}{2}$ deg bevels or slightly concave bevels. See Fig. 4.

(c) Components having nominal wall thicknesses over 10 mm (0.38 in.) to 25 mm (1.0 in.) inclusive shall have bevels as shown in Fig. 5.

(d) Components having nominal wall thicknesses greater than 25 mm (1.0 in.) shall have bevels as shown in Fig. 6.

3.3 Outside Diameter at Welding Ends

Dimension A shall be either that specified in the applicable component standard or that specified in the purchaser's component specification. In the absence of a requirement for dimension A in a component standard or a purchaser's specification, the values for dimension A in Table 1 or Table I-1 may be used.

4 PREPARATION OF INSIDE DIAMETER OF WELDING END

4.1 General

Preparation of the inside diameter at the end of a component shall be in accordance with one of the following, as specified by the purchaser.

(a) Components to be welded without backing rings shall meet the requirements of the standard or specification for the component.

(b) Components to be welded using split or noncontinuous backing rings shall be contoured with a cylindrical surface at the end as shown in Fig. 2, illustration (b) and Fig. 3, illustation (b). If the backing ring contour is other than rectangular, details must be furnished by the purchaser.

(c) Components to be welded using solid or continuous backing rings shall be contoured with a cylindrical or tapered surface at the end as specified by the purchaser. End preparation is illustrated in Fig. 2, illustration (c) and Fig. 3, illustration (c) for rectangular ends and in Fig. 2, illustration (d) and Fig. 3, illustration (d) for tapered ends.

(d) Components to be welded using consumable insert rings or GTAW root pass shall be contoured with a cylindrical surface at the end as shown in Figs. 4, 5, and 6.

4.2 Dimension *C*

Values for dimension *C* shown in Fig. 2, illustrations (c) and (d); Fig. 3, illustrations (c) and (d); and Figs. 5 and 6 can be determined by the following formulas:

(SI Units)

$$C = A - \text{O.D. tolerance} - 2 \times t_{\min} - 0.25 \qquad (1A)$$

(U.S. Customary Units)

$$C = A - \text{O.D. tolerance} - 2 \times t_{\min} - 0.010 \qquad (1)$$

where

A = specified outside pipe diameter at welding end (see para. 3.3)

O.D. tolerance = under-tolerance on the pipe O.D. from the applicable piping specification

$t_{\min}$ = equals t – manufacturing tolerance for pipe wall thickness per applicable pipe specification, mm (in.)

t = nominal wall thickness of pipe, mm (in.)

0.25 (0.010) = plus machining tolerance on Bore C, mm (in.)

Based on tolerances specific to ASTM A 106 and ASTM A 335 pipe, including an under-tolerance on wall thickness of 12.5%, Eqs. (1) and (1A) can be defined as follows:

(SI Units)

$$C = A - 0.79 - 2 \times 0.875t - 0.25$$

(U.S. Customary Units)

$$C = A - 0.031 - 2 \times 0.875t - 0.010$$

Tables 1 and I-1 list the *C* values for pipe with an under-tolerance of 12.5% on wall thickness, including A 106 and A 335 pipe, in sizes NPS 2½ through NPS 36. For pipe with a pipe wall thickness under-tolerance other than 12.5%, do not use the *C* data from Tables 1 and I-1. See para. 4.3(a).

4.3 Exceptions

(a) For pipe or tubing varying from the ASTM A 106 and A 335 types, having different wall thickness and/or outside diameter tolerances (such as forged and bored pipe), the foregoing formulas may be inapplicable. Equations (1) and (1A) may be used to determine *C* for these applications. The purchaser shall specify the *C* dimension when Tables 1 and I-1 data do not apply.

Copyright ASME International
Provided by IHS under license with ASME
No reproduction or networking permitted without license from IHS
Not for Resale

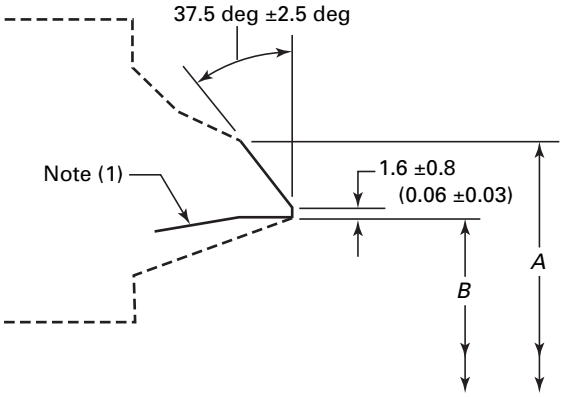

(a) Welding End Detail for Joint Without Backing Ring

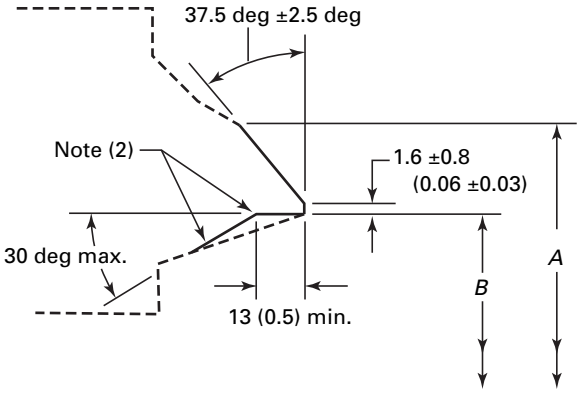

(b) Welding End Detail for Joint Using Split Rectangular Backing Ring

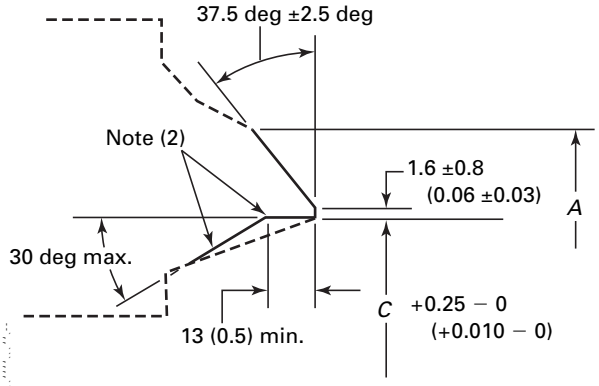

(c) Welding End Detail for Joint Using Continuous Rectangular Backing Ring

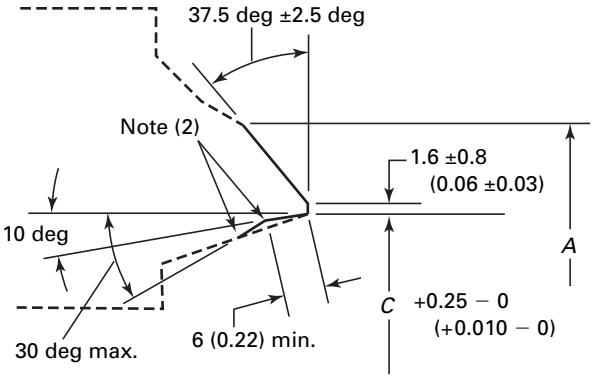

(d) Welding End Detail for Joint Using Continuous Tapered Backing Ring

GENERAL NOTES:

(a) Broken lines denote maximum envelope for transitions from welding bevel and root face into body of component. See Fig. 1 for details.

(b) See para. 5 for tolerances other than those given in these illustrations.

(c) Purchase order must specify contour of any backing ring to be used.

(d) Linear dimensions are in millimeters with inch values in parentheses.

NOTES:

(1) Internal surface may be as-formed or machined for dimension *B* at root face. Contour within the envelope shall be in accordance with para. 2.

(2) Intersections should be slightly rounded.

Fig. 2 Bevels for Wall Thickness Over 3 mm (0.12 in.) to 22 mm (0.88 in.), Inclusive

Copyright ASME International
Provided by IHS under license with ASME
No reproduction or networking permitted without license from IHS Not for Resale

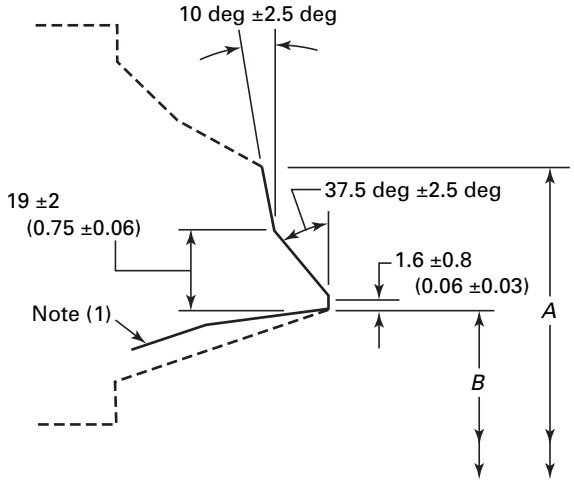

(a) Welding End Detail for Joint Without Backing Ring

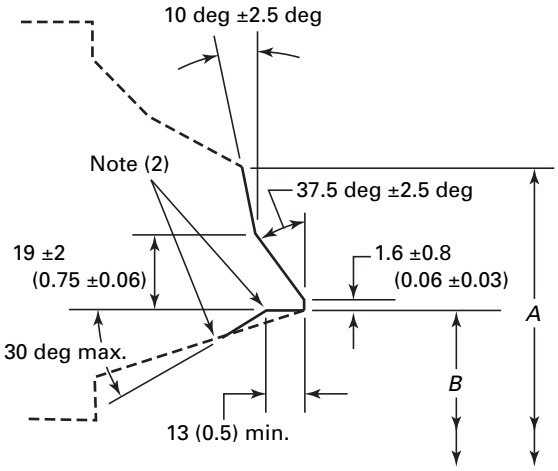

(b) Welding End Detail for Joint Using Split Rectangular Backing Ring

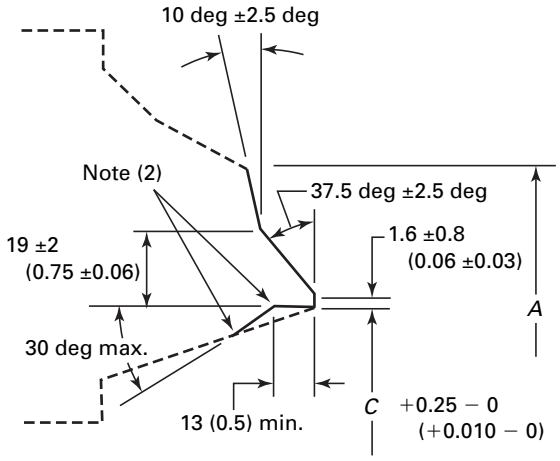

(c) Welding End Detail for Joint Using Continuous Rectangular Backing Ring

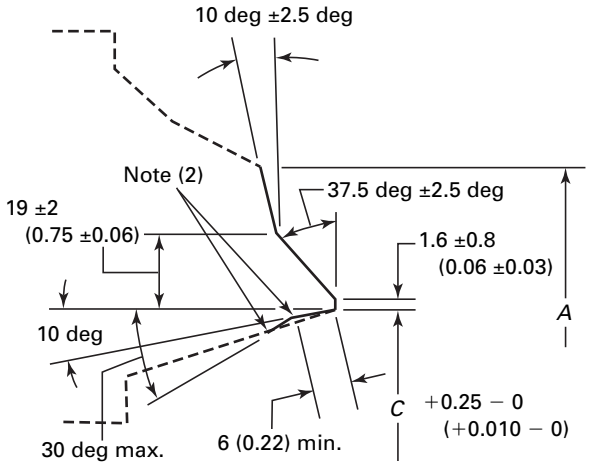

(d) Welding End Detail for Joint Using Continuous Tapered Backing Ring

GENERAL NOTES:

(a) Broken lines denote maximum envelope for transitions from welding bevel and root face into body of component. See Fig. 1 for details.

(b) See para. 5 for tolerances other than those given in these illustrations.

(c) Purchase order must specify contour of any backing ring to be used.

(d) Linear dimensions are in millimeters with inch values in parentheses.

NOTES:

(1) Internal surface may be as-formed or machined for dimension *B* at root face. Contour within the envelope shall be in accordance with para. 2.

(2) Intersections should be slightly rounded.

Fig. 3 Weld Bevel Details for Wall Thickness Over 22 mm (0.88 in.)

Copyright ASME International
Provided by IHS under license with ASME
No reproduction or networking permitted without license from IHS
Not for Resale

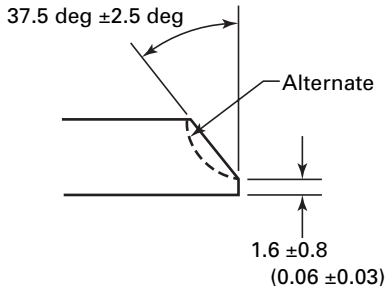

GENERAL NOTES:
(a) This detail applies for gas tungsten arc welding (GTAW) of the root pass where nominal wall thickness is over 3 mm (0.12 in.) to 10 mm (0.38 in.) inclusive.
(b) Linear dimensions are in millimeters with inch values in parentheses.

Fig. 4 Weld Bevel Details for GTAW Root Pass [Wall Thickness Over 3 mm (0.12 in.) to 10 mm (0.38 in.), Inclusive]

(b) For components in smaller sizes and lower schedule numbers, it may be necessary to deposit weld metal on the inside diameter or use thicker wall materials in order to machine the backing ring while maintaining required wall thickness. This condition may also arise when using material whose nominal dimensions indicate sufficient metal but whose actual inside diameter (I.D.), considering tolerances, is large enough to require additional metal.

5 TOLERANCES (See Figs. 2, 3, 5, and 6)

5.1 Dimension *B*

Values for the I.D. at the welding end [see dimension *B*, Fig. 2, illustrations (a) and (b); and Fig. 3, illustrations (a) and (b)] shall be as specified in the applicable standard or specification for the component.

5.2 Welding Bevels, Root Face, and Dimension *C*

Values of welding bevels, root face, and dimension *C* shall be as indicated in Figs. 2, 3, 4, 5, and 6.

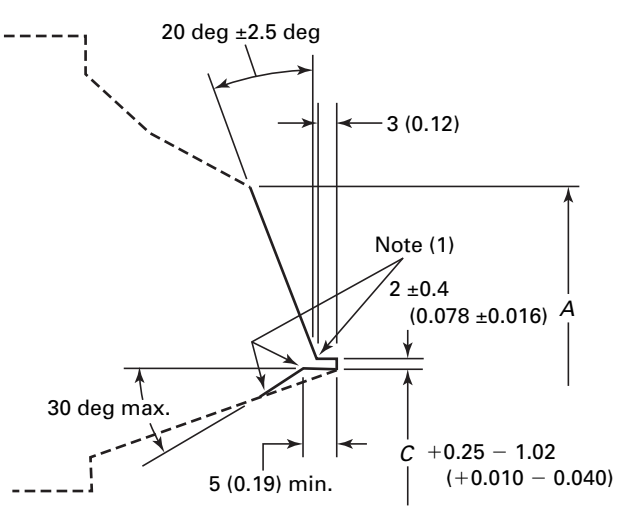

Type A

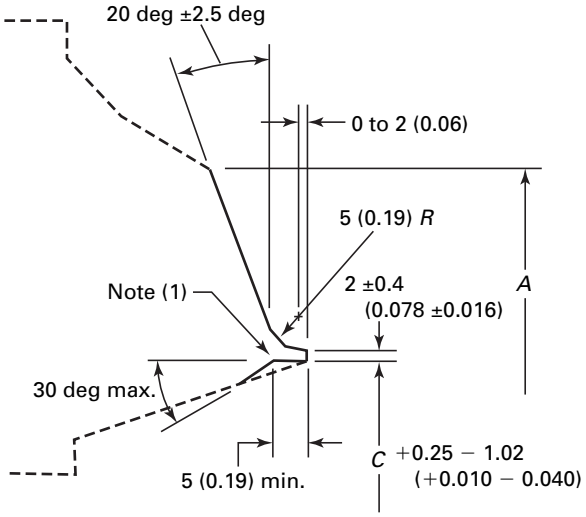

Type B

GENERAL NOTES:
(a) This detail applies for gas tungsten arc welding (GTAW) of the root pass where nominal wall thickness is over 10 mm (0.38 in.) to 25 mm (1.0 in.) inclusive.
(b) Broken lines denote maximum envelope for transitions from welding groove and land into body of component. See Fig. 1 for details.
(c) See para. 5 for tolerances other than those given in these illustrations.
(d) Linear dimensions are in millimeters with inch values in parentheses.

NOTE:
(1) Inside corners should be slightly rounded.

Fig. 5 Weld Bevel Details for GTAW Root Pass [Wall Thickness Over 10 mm (0.38 in.) to 25 mm (1.0 in.), Inclusive]

Copyright ASME International
Provided by IHS under license with ASME
No reproduction or networking permitted without license from IHS
Not for Resale

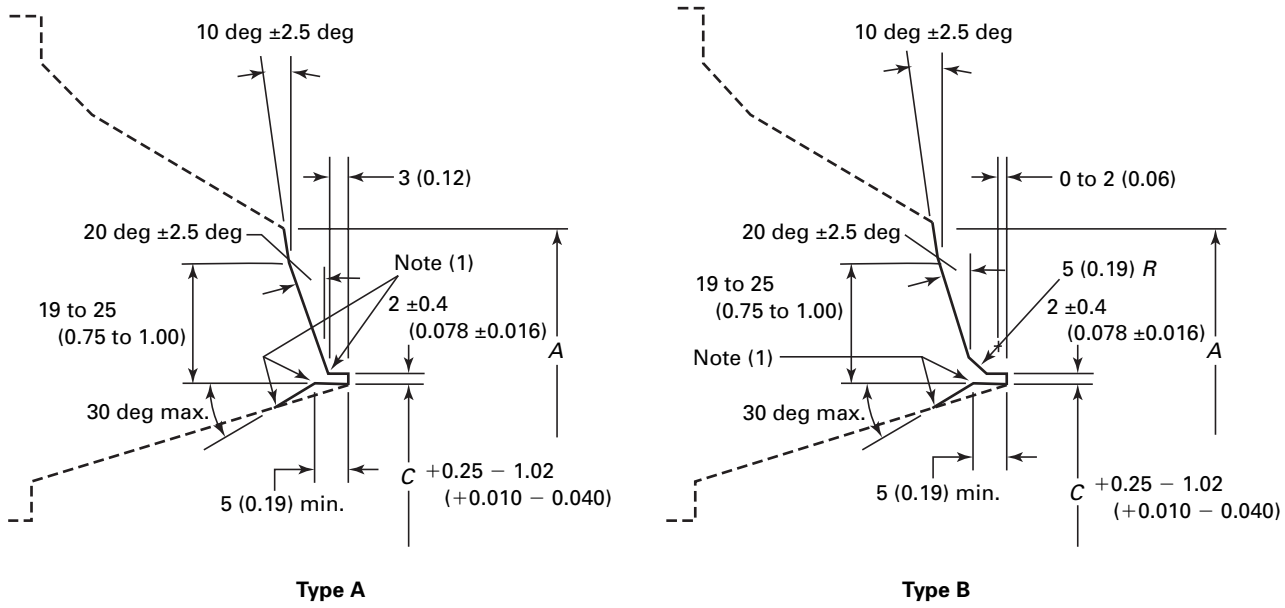

GENERAL NOTES:

(a) This detail applies for gas tungsten arc welding (GTAW) of the root pass where nominal wall thickness is greater than 25 mm (1.0 in.).

(b) Broken lines denote maximum envelope for transitions from welding groove and land into body of component. See Fig. 1 for details.

(c) See para. 5 for tolerances other than those given in these illustrations.

(d) Linear dimensions are in millimeters with inch values in parentheses.

NOTE:

(1) Inside corners should be slightly rounded.

Fig. 6 Weld Bevel Details for GTAW Root Pass [Wall Thickness Over 25 mm (1.0 in.)]

Large diameter pipe and fittings with a relatively thin wall have a tendency to spring out-of-round after removal from the machining fixture. For this reason, the measured diameters may vary with orientation. A tolerance of +0.25 mm (+0.010 in.) applies to the average *C* diameter in Figs. 2 and 3, illustrations (c) and (d). A tolerance of +0.25 mm, –1.02 mm (+0.010 in., –0.040 in.) applies to the average *C* diameter for Figs. 5 and 6.

5.3 Dimension *A*

Unless otherwise specified, the tolerances for dimension *A* shall be:

Size	Tolerance
NPS ≤ 5	+2.5 mm, –0.79 mm (+0.10 in., –0.031 in.)
NPS ≥ 6	+4.0 mm, –0.79 mm (+0.16 in., –0.031 in.)

5.4 Wall Thickness

The maximum thickness, t_{max}, at the end of the component is

(a) greater of t_{min} + 4 mm (0.16 in.) or $1.15t_{min}$ when ordered on a minimum wall basis

(b) greater of t_{min} + 4 mm (0.16 in.) or $1.10t_{nom}$ when ordered on a nominal wall basis (see Fig. 1)

The minimum thickness, t_{min}, shall be as specified in the applicable standard or specification for the component (see Figs. 2, 3, 5, and 6).

Copyright ASME International
Provided by IHS under license with ASME
No reproduction or networking permitted without license from IHS
Not for Resale

Table 1 Dimensions of Welding Ends (See Figs. 1 to 6, Inclusive)

Nominal Pipe Size (NPS)	Schedule No. [Note (1)]	O.D. at Welding Ends: Wrought or Fabricated Components, *A* [Note (1)]	O.D. at Welding Ends: Cast Components, *A*	*B*	*C* [Note (2)]	*t*
2½	40	73.0	75	62.5	62.93	5.16
	80	73.0	75	59	59.69	7.01
	160	73.0	75	54	55.28	9.53
	XXS	73.0	75	45	47.43	14.02
3	40	88.9	91	78	78.25	5.49
	80	88.9	91	73.5	74.53	7.62
	160	88.9	91	66.5	68.38	11.13
	XXS	88.9	91	58.5	61.19	15.24
3½	40	101.6	105	90	90.52	5.74
	80	101.6	105	85.5	86.42	8.08
4	40	114.3	117	102	102.73	6.02
	80	114.3	117	97	98.28	8.56
	120	114.3	117	92	93.78	11.13
	160	114.3	117	87.5	89.65	13.49
	XXS	114.3	117	80	83.30	17.12
5	40	141.3	144	128	128.80	6.55
	80	141.3	144	122	123.58	9.53
	120	141.3	144	116	118.04	12.70
	160	141.3	144	109.5	112.47	15.88
	XXS	141.3	144	103	106.92	19.05
6	40	168.3	172	154	154.82	7.11
	80	168.3	172	146.5	148.06	10.97
	120	168.3	172	140	142.29	14.27
	160	168.3	172	132	135.31	18.26
	XXS	168.3	172	124.5	128.85	21.95
8	40	219.1	223	203	203.75	8.18
	60	219.1	223	198.5	200.02	10.31
	80	219.1	223	193.5	195.84	12.70
	100	219.1	223	189	191.65	15.09
	120	219.1	223	182.5	186.11	18.26
	140	219.1	223	178	181.98	20.62
	XXS	219.1	223	174.5	179.16	22.23
	160	219.1	223	173	177.79	23.01
10	40	273.0	278	254.5	255.74	9.27
	60	273.0	278	247.5	249.74	12.70
	80	273.0	278	243	245.55	15.09
	100	273.0	278	236.5	240.01	18.26
	120	273.0	278	230	234.44	21.44
	140	273.0	278	222	227.51	25.40
	160	273.0	278	216	221.95	28.58
12	STD	323.8	329	305	306.08	9.53
	40	323.8	329	303	304.72	10.31
	XS	323.8	329	298.5	300.54	12.70
	60	323.8	329	295	297.79	14.27

Copyright ASME International
Provided by IHS under license with ASME
No reproduction or networking permitted without license from IHS
Not for Resale

Table 1 Dimensions of Welding Ends (Cont'd) (See Figs. 1 to 6, Inclusive)

Nominal Pipe Size (NPS)	Schedule No. [Note (1)]	O.D. at Welding Ends: Wrought or Fabricated Components, *A* [Note (1)]	O.D. at Welding Ends: Cast Components, *A*	*B*	*C* [Note (2)]	*t*
12	80	323.8	329	289	292.17	17.48
	100	323.8	329	281	285.24	21.44
	120	323.8	329	273	278.31	25.40
	140	323.8	329	266.5	272.75	28.58
	160	323.8	329	257	264.45	33.32
14	STD	355.6	362	336.5	337.88	9.53
	40	355.6	362	333.5	335.08	11.13
	XS	355.6	362	330	332.34	12.70
	60	355.6	362	325.5	328.15	15.09
	80	355.6	362	317.5	321.22	19.05
	100	355.6	362	308	312.86	23.83
	120	355.6	362	300	305.93	27.79
	140	355.6	362	292	299.00	31.75
	160	355.6	362	284	292.07	35.71
16	STD	406.4	413	387.5	388.68	9.53
	40	406.4	413	381	383.14	12.70
	60	406.4	413	373	376.21	16.66
	80	406.4	413	363.5	367.84	21.44
	100	406.4	413	354	359.53	26.19
	120	406.4	413	344.5	351.18	30.96
	140	406.4	413	333.5	341.43	36.53
	160	406.4	413	325.5	334.50	40.49
18	STD	457.2	464	438	439.48	9.53
	XS	457.2	464	432	433.94	12.70
	40	457.2	464	428.5	431.19	14.27
	60	457.2	464	419	422.82	19.05
	80	457.2	464	409.5	414.46	23.83
	100	457.2	464	398.5	404.78	29.36
	120	457.2	464	387.5	395.03	34.93
	140	457.2	464	378	386.77	39.67
	160	457.2	464	366.5	376.99	45.24
20	STD	508.0	516	489	490.28	9.53
	XS	508.0	516	482.5	484.74	12.70
	40	508.0	516	478	480.55	15.09
	60	508.0	516	467	470.88	20.62
	80	508.0	516	455.5	461.13	26.19
	100	508.0	516	443	450.02	32.54
	120	508.0	516	432	440.29	38.10
	140	508.0	516	419	429.17	44.45
	160	508.0	516	408	419.44	50.01
22	STD	558.8	567	539	541.08	9.53
	XS	558.8	567	533	535.54	12.70
	60	558.8	567	514	518.86	22.23
	80	558.8	567	501	507.75	28.58

Copyright ASME International
Provided by IHS under license with ASME
No reproduction or networking permitted without license from IHS
Not for Resale

Table 1 Dimensions of Welding Ends (Cont'd) (See Figs. 1 to 6, Inclusive)

Nominal Pipe Size (NPS)	Schedule No. [Note (1)]	O.D. at Welding Ends: Wrought or Fabricated Components, *A* [Note (1)]	O.D. at Welding Ends: Cast Components, *A*	*B*	*C* [Note (2)]	*t*
22	100	558.8	567	488.5	496.63	34.93
	120	558.8	567	476	485.52	41.28
	140	558.8	567	463	474.41	47.63
	160	558.8	567	450.5	463.30	53.98
24	STD	609.6	619	590.5	591.88	9.53
	XS	609.6	619	584	586.34	12.70
	30	609.6	619	581	583.59	14.27
	40	609.6	619	574.5	577.97	17.48
	60	609.6	619	560.5	565.49	24.61
	80	609.6	619	547.5	554.38	30.96
	100	609.6	619	532	540.49	38.89
	120	609.6	619	517.5	528.03	46.02
	140	609.6	619	505	516.91	52.37
	160	609.6	619	490.5	504.37	59.54
26	10	660.4	670	645.5	645.50	7.92
	20	660.4	670	635	637.14	12.70
28	10	711.2	721	695.5	696.30	7.92
	20	711.2	721	686	687.94	12.70
	30	711.2	721	679.5	682.37	15.88
30	10	762.0	772	746	747.10	7.92
	20	762.0	772	736.5	738.74	12.70
	30	762.0	772	730	733.17	15.88
32	10	812.8	825	797	797.90	7.92
	20	812.8	825	787.5	789.54	12.70
	30	812.8	825	781	783.97	15.88
	40	812.8	825	778	781.17	17.48
34	10	863.6	876	848	848.70	7.92
	20	863.6	876	838	840.34	12.70
	30	863.6	876	832	834.77	15.88
	40	863.6	876	828.5	831.97	17.48
36	10	914.4	927	898.5	899.50	7.92
	20	914.4	927	889	891.14	12.70
	30	914.4	927	882.5	885.57	15.88
	40	914.4	927	876.5	880.02	19.05

GENERAL NOTES:

(a) Dimensions are in millimeters.

(b) See para. 5 for tolerances.

NOTES:

(1) Data is from ASME B36.10M or a more precise rounding of the inch dimensions from Table I-1. Letter designations signify:
   (a) STD = standard wall thickness
   (b) XS = extra-strong wall thickness
   (c) XXS = double extra-strong wall thickness

(2) Internal machining for continuous backing rings for sizes NPS 2 and smaller is not contemplated. See para. 4.2 for *C* dimension for sizes not listed.

Copyright ASME International
Provided by IHS under license with ASME
No reproduction or networking permitted without license from IHS Not for Resale

MANDATORY APPENDIX I
INCH TABLE

This Appendix provides a table (Table I-1) of the standard inch dimensions for fittings.

Copyright ASME International
Provided by IHS under license with ASME
No reproduction or networking permitted without license from IHS
Not for Resale

Table I-1 Dimensions of Welding Ends (See Figs. 1 to 6, Inclusive)

Nominal Pipe Size (NPS)	Schedule No. [Note (1)]	O.D. at Welding Ends: Wrought or Fabricated Components, *A* [Note (1)]	O.D. at Welding Ends: Cast Components, *A*	*B*	*C* [Note (2)]	*t*
2½	40	2.875	2.96	2.469	2.479	0.203
	80	2.875	2.96	2.323	2.351	0.276
	160	2.875	2.96	2.125	2.178	0.375
	XXS	2.875	2.96	1.771	1.868	0.552
3	40	3.500	3.59	3.068	3.081	0.216
	80	3.500	3.59	2.900	2.934	0.300
	160	3.500	3.59	2.624	2.692	0.438
	XXS	3.500	3.59	2.300	2.409	0.600
3½	40	4.000	4.12	3.548	3.564	0.226
	80	4.000	4.12	3.364	3.402	0.318
4	40	4.500	4.62	4.026	4.044	0.237
	80	4.500	4.62	3.826	3.869	0.337
	120	4.500	4.62	3.624	3.692	0.438
	160	4.500	4.62	3.438	3.530	0.531
	XXS	4.500	4.62	3.152	3.279	0.674
5	40	5.563	5.69	5.047	5.070	0.258
	80	5.563	5.69	4.813	4.866	0.375
	120	5.563	5.69	4.563	4.647	0.500
	160	5.563	5.69	4.313	4.428	0.625
	XXS	5.563	5.69	4.063	4.209	0.750
6	40	6.625	6.78	6.065	6.094	0.280
	80	6.625	6.78	5.761	5.828	0.432
	120	6.625	6.78	5.501	5.600	0.562
	160	6.625	6.78	5.187	5.326	0.719
	XXS	6.625	6.78	4.897	5.072	0.864
8	40	8.625	8.78	7.981	8.020	0.322
	60	8.625	8.78	7.813	7.873	0.406
	80	8.625	8.78	7.625	7.709	0.500
	100	8.625	8.78	7.437	7.544	0.594
	120	8.625	8.78	7.187	7.326	0.719
	140	8.625	8.78	7.001	7.163	0.812
	XXS	8.625	8.78	6.875	7.053	0.875
	160	8.625	8.78	6.813	6.998	0.906
10	40	10.750	10.94	10.020	10.070	0.365
	60	10.750	10.94	9.750	9.834	0.500
	80	10.750	10.94	9.562	9.670	0.594
	100	10.750	10.94	9.312	9.451	0.719
	120	10.750	10.94	9.062	9.232	0.844
	140	10.750	10.94	8.750	8.959	1.000
	160	10.750	10.94	8.500	8.740	1.125
12	STD	12.750	12.97	12.000	12.053	0.375
	40	12.750	12.97	11.938	11.999	0.406
	XS	12.750	12.97	11.750	11.834	0.500
	60	12.750	12.97	11.626	11.725	0.562

Copyright ASME International
Provided by IHS under license with ASME
No reproduction or networking permitted without license from IHS Not for Resale

Table I-1 Dimensions of Welding Ends (Cont'd)
(See Figs. 1 to 6, Inclusive)

Nominal Pipe Size (NPS)	Schedule No. [Note (1)]	O.D. at Welding Ends: Wrought or Fabricated Components, *A* [Note (1)]	O.D. at Welding Ends: Cast Components, *A*	*B*	*C* [Note (2)]	*t*
12	80	12.750	12.97	11.374	11.505	0.688
	100	12.750	12.97	11.062	11.232	0.844
	120	12.750	12.97	10.750	10.959	1.000
	140	12.750	12.97	10.500	10.740	1.125
	160	12.750	12.97	10.126	10.413	1.312
14	STD	14.000	14.25	13.250	13.303	0.375
	40	14.000	14.25	13.124	13.192	0.438
	XS	14.000	14.25	13.000	13.084	0.500
	60	14.000	14.25	12.812	12.920	0.594
	80	14.000	14.25	12.500	12.646	0.750
	100	14.000	14.25	12.124	12.318	0.938
	120	14.000	14.25	11.812	12.044	1.094
	140	14.000	14.25	11.500	11.771	1.250
	160	14.000	14.25	11.188	11.498	1.406
16	STD	16.000	16.25	15.250	15.303	0.375
	40	16.000	16.25	15.000	15.084	0.500
	60	16.000	16.25	14.688	14.811	0.656
	80	16.000	16.25	14.312	14.482	0.844
	100	16.000	16.25	13.938	14.155	1.031
	120	16.000	16.25	13.562	13.826	1.219
	140	16.000	16.25	13.124	13.442	1.438
	160	16.000	16.25	12.812	13.170	1.594
18	STD	18.000	18.28	17.250	17.303	0.375
	XS	18.000	18.28	17.000	17.084	0.500
	40	18.000	18.28	16.876	16.975	0.562
	60	18.000	18.28	16.500	16.646	0.750
	80	18.000	18.28	16.124	16.318	0.938
	100	18.000	18.28	15.688	15.936	1.156
	120	18.000	18.28	15.250	15.553	1.375
	140	18.000	18.28	14.876	15.225	1.562
	160	18.000	18.28	14.438	14.842	1.781
20	STD	20.000	20.31	19.250	19.303	0.375
	XS	20.000	20.31	19.000	19.084	0.500
	40	20.000	20.31	18.812	18.920	0.594
	60	20.000	20.31	18.376	18.538	0.812
	80	20.000	20.31	17.938	18.155	1.031
	100	20.000	20.31	17.438	17.717	1.281
	120	20.000	20.31	17.000	17.334	1.500
	140	20.000	20.31	16.500	16.896	1.750
	160	20.000	20.31	16.062	16.513	1.969
22	STD	22.000	22.34	21.250	21.303	0.375
	XS	22.000	22.34	21.000	21.084	0.500
	60	22.000	22.34	20.250	20.428	0.875
	80	22.000	22.34	19.750	19.990	1.125

Copyright ASME International
Provided by IHS under license with ASME
No reproduction or networking permitted without license from IHS
Not for Resale

Table I-1 Dimensions of Welding Ends (Cont'd)
(See Figs. 1 to 6, Inclusive)

Nominal Pipe Size (NPS)	Schedule No. [Note (1)]	O.D. at Welding Ends: Wrought or Fabricated Components, *A* [Note (1)]	O.D. at Welding Ends: Cast Components, *A*	*B*	*C* [Note (2)]	*t*
22	100	22.000	22.34	19.250	19.553	1.375
	120	22.000	22.34	18.750	19.115	1.625
	140	22.000	22.34	18.250	18.678	1.875
	160	22.000	22.34	17.750	18.240	2.125
24	STD	24.000	24.38	23.250	23.303	0.375
	XS	24.000	24.38	23.000	23.084	0.500
	30	24.000	24.38	22.876	22.975	0.562
	40	24.000	24.38	22.624	22.755	0.688
	60	24.000	24.38	22.062	22.263	0.969
	80	24.000	24.38	21.562	21.826	1.219
	100	24.000	24.38	20.938	21.280	1.531
	120	24.000	24.38	20.376	20.788	1.812
	140	24.000	24.38	19.876	20.350	2.062
	160	24.000	24.38	19.312	19.857	2.344
26	10	26.000	26.38	25.376	25.413	0.312
	20	26.000	26.38	25.000	25.084	0.500
28	10	28.000	28.38	27.376	27.413	0.312
	20	28.000	28.38	27.000	27.084	0.500
	30	28.000	28.38	26.750	26.865	0.625
30	10	30.000	30.38	29.376	29.413	0.312
	20	30.000	30.38	29.000	29.084	0.500
	30	30.000	30.38	28.750	28.865	0.625
32	10	32.000	32.50	31.376	31.413	0.312
	20	32.000	32.50	31.000	31.084	0.500
	30	32.000	32.50	30.750	30.865	0.625
	40	32.000	32.50	30.624	30.755	0.688
34	10	34.000	34.50	33.376	33.413	0.312
	20	34.000	34.50	33.000	33.084	0.500
	30	34.000	34.50	32.750	32.865	0.625
	40	34.000	34.50	32.624	32.755	0.688
36	10	36.000	36.50	35.376	35.413	0.312
	20	36.000	36.50	35.000	35.084	0.500
	30	36.000	36.50	34.750	34.865	0.625
	40	36.000	36.50	34.500	34.646	0.750

GENERAL NOTES:

(a) Dimensions are in inches.

(b) See para. 5 for tolerances.

NOTES:

(1) Data is from ASME B36.10M. Letter designations signify:
- *(a)* STD = standard wall thickness
- *(b)* XS = extra-strong wall thickness
- *(c)* XXS = double extra-strong wall thickness

(2) Internal machining for continuous backing rings for sizes NPS 2 and smaller is not contemplated. See para. 4.2 for *C* dimension for sizes not listed.

Copyright ASME International
Provided by IHS under license with ASME
No reproduction or networking permitted without license from IHS Not for Resale

MANDATORY APPENDIX II
REFERENCES

The following is a list of publications referenced in this Standard.

ASME B16.5–2003, Pipe Flanges and Flanged Fittings

ASME B16.9–2001, Factory-Made Wrought Buttwelding Fittings

ASME B36.10M–2001, Welded and Seamless Wrought Steel Pipe

Publisher: The American Society of Mechanical Engineers (ASME International), Three Park Avenue, New York, NY 10016-5990; Order Department: 22 Law Drive, Box 2300, Fairfield, NJ 07007-2300

ASTM A 106–99e1, Specification for Seamless Carbon Steel Pipe for High-Temperature Service

ASTM A 335/A 335M–01, Specification for Seamless Ferritic Alloy Steel Pipe for High-Temperature Service

ASTM E 29–93a (1999), Standard Practice for Using Significant Digits in Test Data to Determine Conformance With Specifications

Publisher: American Society for Testing and Materials (ASTM), 100 Barr Harbor Drive, West Conshohocken, PA 19428

ISO 9000–2000: Quality Management Systems — Fundamentals and Vocabulary

ISO 9001–2000: Quality Management Systems — Requirements

ISO 9004–2000: Quality Management Systems — Guidelines for Performance Improvement

Publisher: International Organization for Standardization (ISO), 1 rue de Varembé, Case Postale 56, CH-1211 Genéve 20, Switzerland/Suisse

Copyright ASME International
Provided by IHS under license with ASME
No reproduction or networking permitted without license from IHS
Not for Resale

NONMANDATORY APPENDIX A
QUALITY SYSTEM PROGRAM

The products manufactured in accordance with ASME B16.25 shall be produced under a quality system program following the principles of an appropriate standard from the ISO 9000 series.[1] A determination of the need for registration and/or certification of the product manufacturer's quality system program by an independent organization shall be the responsibility of the manufacturer. The detailed documentation demonstrating program compliance shall be available to the purchaser at the manufacturer's facility. A written summary description of the program utilized by the product manufacturer shall be available to the purchaser upon request. The product manufacturer is defined as the entity whose name or trademark appears on the product in accordance with the marking or identification requirements of ASME B16.25.

[1] The series is also available from the American National Standards Institute (ANSI) and the American Society for Quality Control (ASQC) as American National Standards that are identified by a prefix "Q" replacing the prefix "ISO." Each standard of the series is listed under references.

Copyright ASME International
Provided by IHS under license with ASME
No reproduction or networking permitted without license from IHS
Not for Resale

ASME B16.25 INTERPRETATIONS NO. 3

Replies to Technical Inquiries
January 1, 1997 through December 31, 2003

FOREWORD

The publication includes all of the written replies issued between the indicated dates by the Secretary, speaking for the ASME B16 Committee, Standardization of Valves, Flanges, Fittings, Gaskets, and Valve Actuators, to inquiries concerning interpretations of technical aspects of B16.25, Buttwelding Ends.

These replies are taken verbatim from the original letters except for a few typographical corrections and some minor editorial corrections made for the purpose of improved clarity. In some few instances, a review of interpretation revealed a need for corrections of a technical nature; in these cases, a corrected interpretation follows immediately after the original reply.

These interpretations were prepared in accordance with the accredited ASME procedures. ASME procedures provide for reconsideration of these interpretations when or if additional information is available which the inquirer believes might affect the interpretation. Further, persons aggrieved by this interpretation may appeal to the cognizant ASME Committee or Subcommittee. ASME does not "approve," "certify," "rate," or "endorse" any item, construction, proprietary device, or activity.

Copyright ASME International
Provided by IHS under license with ASME
No reproduction or networking permitted without license from IHS
Not for Resale

Interpretation: 3-1

Subject: ASME B16.25-1997, Table 1, Note (2)

Date Issued: September 19, 2001

File: B16-01-006

Question: According to ASME B16.25-1997, Table 1, Note (2), may diameters other than those listed in Table 1, column 4, be used for cast steel valves?

Reply: Yes. The minimum thickness of the welding end required by the applicable standard or specification needs to be considered. See para. 5.4.

Copyright ASME International
Provided by IHS under license with ASME
No reproduction or networking permitted without license from IHS Not for Resale

ASME B16.25-2003

ISBN 0-7918-2868-9





J01303

--`,,```,,,,````-`-`,,`,,`,`,,`---

Copyright ASME International
Provided by IHS under license with ASME
No reproduction or networking permitted without license from IHS

Not for Resale