ASME B16.24-2001
[Revision of ASME B16.24-1991 (R1998)]

CAST COPPER ALLOY PIPE FLANGES AND FLANGED FITTINGS: CLASSES 150, 300, 400, 600, 900, 1500, AND 2500

AN AMERICAN NATIONAL STANDARD



The American Society of Mechanical Engineers

Copyright ASME International
Provided by IHS under license with ASME
No reproduction or networking permitted without license from IHS

Not for Resale

The American Society of Mechanical Engineers

AN AMERICAN NATIONAL STANDARD

CAST COPPER ALLOY PIPE FLANGES AND FLANGED FITTINGS: CLASSES 150, 300, 400, 600, 900, 1500, AND 2500

ASME B16.24-2001

[Revision of ASME B16.24-1991 (R1998)]

Copyright ASME International
Provided by IHS under license with ASME
No reproduction or networking permitted without license from IHS
Not for Resale

Date of Issuance: March 15, 2002

The 2001 edition of this Standard is being issued with an automatic addenda subscription service. The use of an addenda allows revisions made in response to public review comments or committee actions to be published as necessary. The next edition of this Standard is scheduled for publication in 2006.

ASME issues written replies to inquiries concerning interpretations of technical aspects of this Standard. The interpretations will be included with the above addenda service.

ASME is the registered trademark of The American Society of Mechanical Engineers.

This code or standard was developed under procedures accredited as meeting the criteria for American National Standards. The Standards Committee that approved the code or standard was balanced to assure that individuals from competent and concerned interests have had an opportunity to participate. The proposed code or standard was made available for public review and comment that provides an opportunity for additional public input from industry, academia, regulatory agencies, and the public-at-large.

ASME does not "approve," "rate," or "endorse" any item, construction, proprietary device, or activity.

ASME does not take any position with respect to the validity of any patent rights asserted in connection with any items mentioned in this document, and does not undertake to insure anyone utilizing a standard against liability for infringement of any applicable letters patent, nor assumes any such liability. Users of a code or standard are expressly advised that determination of the validity of any such patent rights, and the risk of infringement of such rights, is entirely their own responsibility.

Participation by federal agency representative(s) or person(s) affiliated with industry is not to be interpreted as government or industry endorsement of this code or standard.

ASME accepts responsibility for only those interpretations of this document issued in accordance with the established ASME procedures and policies, which precludes the issuance of interpretations by individuals.

No part of this document may be reproduced in any form,
in an electronic retrieval system or otherwise,
without the prior written permission of the publisher.

The American Society of Mechanical Engineers
Three Park Avenue, New York, NY 10016-5990

Copyright © 2001 by
THE AMERICAN SOCIETY OF MECHANICAL ENGINEERS
All Rights Reserved
Printed in U.S.A.

--`,,`,,`-`-`,,`,,`,`,,`---

Copyright ASME International
Provided by IHS under license with ASME
No reproduction or networking permitted without license from IHS

Not for Resale

CONTENTS

Foreword v
Committee Roster vii

1 General 1
1.1 Scope 1
1.2 Codes and Regulations 1
1.3 Units of Measurement 1
1.4 Quality Systems 1

2 Pressure-Temperature Ratings 1
2.1 General 1
2.2 Ratings of Flanged Joints 1
2.3 Rating Temperature 1
2.4 Low Temperature Service 2
2.5 System Hydrostatic Test 2

3 Sizes and Methods of Designating Openings 7
3.1 Regular Flanges or Fittings 7
3.2 Reduced Fittings 7

4 Marking 7
4.1 General 7

5 Materials 7
5.1 General 7
5.2 Flanges 7
5.3 Flanged Fittings 7
5.4 Bolting 7
5.5 Gaskets 9
5.6 Materials Selection 9

6 Flange Dimensions 9
6.1 General 9
6.2 End Flange Facings 9
6.3 Threaded Flanges 9
6.4 Thread Chamfer 9
6.5 Thread Length 9
6.6 Threaded Gaging 9
6.7 Threaded Flange Assembly 10
6.8 Integral Flanges 10
6.9 Spot and Back Facing 10

7 Fitting Dimensions 10
7.1 Center-to-Face Dimensions 10
7.2 Wall Thickness 10

--`,,`-`-`,,`,,`,`,,`---
Copyright ASME International
Provided by IHS under license with ASME
No reproduction or networking permitted without license from IHS
Not for Resale

8 Bolting, Nuts, and Gaskets 11

9 Tolerances 11
9.1 Wall Thickness 11
9.2 Center-to-Face 11
9.3 Facings 11
9.4 Flange Thickness 11
9.5 Counterbore, Threaded Flanges 11
9.6 Drilling and Facing 11

10 Tests 11
10.1 Flange Testing 11

Figure
1 Method of Designating Outlets of Reducing Fittings 8

Tables
1 Pressure-Temperature Ratings for ASTM B62, Alloy C83600 and ASTM B61, Alloy C9220 2
2 Pressure-Temperature Ratings for ASTM B148, Alloy C95200 2
3 Dimensions of Class 150 Threaded Companion and Blind Flanges for Alloys C83600 and C92200 3
4 Dimensions of Class 150 Elbows, Tees, Crosses, Laterals, True Ys (Straight Sizes), and Reducers 4
5 Dimensions of Class 300 Threaded Companion and Blind Flanges for Alloys C83600 and C92200 5
6 Dimensions of Class 300 Elbows, Tees, Crosses, Laterals, True Ys (Straight Sizes), and Reducers 6

Mandatory Appendix
I References 13

Nonmandatory Appendix
A Quality System Program 14

Copyright ASME International
Provided by IHS under license with ASME
No reproduction or networking permitted without license from IHS
Not for Resale

FOREWORD

The development of the first Bronze Flanged Standard was started in 1910 to eliminate the confusion prevailing in the trade with respect to bronze flange dimensions and service ratings. The work culminated and was published in 1914 under the title "1914 Brass Standard Flange Dimensions" for 150 and 150 lb steam pressures.

This was superseded in 1928 by the Manufacturers Standardization Society of Valves and Fittings Industry (SS) "Standard Practice" SP-2, which contained changes to provide interchangeability with the American Cast-Iron Flange Standards for 125 lb and 250 lb stream pressures. Subsequent revisions were issued in 1930 and 1936. In the latter, a new column of thickness for 300 lb flanges was added.

In the 1937 edition, illustrations and dimensions of bronze flanged fittings were added. This was edited and reprinted in 1943 to make it conform to U.S. Department of Commerce, National Bureau of Standards, Simplified Practice Recommendation R-183-42 and to the War Production Board Limitation Order L-252, dated January 23, 1943.

In the 1946 edition, the pressure-temperature ratings were added for the 150 lb and 300 lb standards and the dimensions for that reference to the 250 lb standard were omitted. Limitation Order L-252 was cancelled on April 28, 1945. The period of government prohibition of manufacture and civilian use of the 250 lb standard, during the life of Order L-252, caused no hardship on the part of either the manufacturer or the consumer, indicating that this pressure class in bronze products does not warrant being recognized as a standard.

This Standard, which has been kept up to date and in constant use since 1910, was reviewed and reaffirmed in 1949. In October 1951, MSS presented it to Sectional Committee B16 on Pipe Flanges and Flanged Fittings for review and possible approval as an American Standard.

Following approval of the sectional committee and sponsor organizations, it was presented to the American Standards Association (ASA), now the American National Standards Institute (ANSI), for approval and designation as an American Standard. This was granted on February 27, 1953.

In 1961, following the organization of Subcommittee No. 11 (now J), work was begun on revision of the 1953 edition. Chief among the changes recommended was the deletion of reference to brass. This resulted from an action of the ASTM redefining the alloys that could properly be called bronze. Several other changes that brought the standard up to date were also approved by the Sectional Committee and sponsor organizations, with approval designation as an American Standard being granted on July 20, 1962.

Subcommittee J, in keeping with regulations of ANSI, began a review of the document in 1969. Only minor changes were deemed necessary. Among these were the presentation of rating in tabular form, and the gasket-retaining grooves being made permissible rather than recommended. Final approval to the changes was granted by ANSI on January, 27, 1971.

A revision was undertaken in 1977 and several changes were proposed. Chief among these was the addition of metric equivalents and the elimination of the optional gasket-retaining grooves. In addition, the standard was extensively revised editorially. Following approvals by Subcommittee J, the Standards Committee and Co-Secretariat, ANSI granted its approval on June 26, 1979.

In 1982, American National Standard Committee B16 was reorganized as an ASME Committee, operating under procedures accredited by ANSI.

In 1991 the scope of the Standard was changed from bronze pipe flanges and fittings to cast copper alloy flanges and flanged fittings, and it was expanded to include classes

--`,`-`-`,,`,,`,`,,`---

Copyright ASME International
Provided by IHS under license with ASME
No reproduction or networking permitted without license from IHS
Not for Resale

150, 300, 400, 600, 900, 1500, and 2500. The 1991 edition also established U.S. Customary units as the standard and editorial revisions were made to improve the text.

Following approval by the Standards Committee and ASME, this edition of the Standard was approved as an American National Standard by ANSI on February 1, 1991, with the new designation ASME B16.24-1991 and the new title "Cast Copper Alloy Pipe Flanges and Flanged Fittings."

This 2001 edition of the Standard was revised to include Nonmandatory Appendix A, Quality System Program. Editorial revisions were made for clarification.

Requests for interpretations or suggestions for revisions should be sent to the Secretary, B16 Committee, The American Society of Mechanical Engineers, Three Park Avenue, New York, NY 10016-5990.

Following approval by the B16 Main Committee and the ASME Supervisory Board, this Standard was approved as an American National Standard by ANSI on October 24, 2001.

--`,,`,,-`-`,,`,,`,`,,`---

Copyright ASME International
Provided by IHS under license with ASME
No reproduction or networking permitted without license from IHS
Not for Resale

ASME STANDARDS COMMITTEE B16
Standardization of Valves, Flanges, Fittings, Gaskets, and Valve Actuators

(The following is the roster of the Committee at the time of approval of this Standard.)

OFFICERS

H. R. Sonderegger, *Chair*
M. L. Nayyar, *Vice Chair*
P. A. Reddington, *Secretary*

COMMITTEE PERSONNEL

R. W. Barnes, Anric Enterprises
R. R. Brodin, Fisher Controls International, Inc.
M. A. Clark, Nibco, Inc.
A. Cohen, A. Cohen and Associates
C. E. Floren, Mueller Co.
D. R. Frikken, Solutia, Inc.
G. A. Jolly, Vogt Valve Co.
W. G. Knecht, BW/IP International, Inc.
R. Koester, The William Powell Co.
W. N. McLean, Newco Valves
M. L. Nayyar, Bechtel Power Corp.
P. A. Reddington, The American Society of Mechanical Engineers
R. A. Schmidt, Trinity-Ladish Co.
H. R. Sonderegger, Grinnell Corp.
W. M. Stephan, Flexitallic, Inc.
T. F. Stroud, Ductile Iron Pipe Research Association
R. E. White, Richard E. White and Associates
D. A. Williams, Southern Company Services
L. A. Willis, The Dow Chemical Co.
W. R. Worley, Union Carbide Corp.

SUBCOMMITTEE J — COPPER AND COPPER ALLOY FLANGES, FLANGED FITTINGS, AND SOLDER JOINT FITTINGS

M. A. Clark, *Chair,* NIBCO, Inc.
D. F. Buccicone, Elkhart Products Corp./Division of Amcast Industries Corp.
A. Cohen, Arthur Cohen & Associates
D. R. Frikken, Solutia, Inc.
A. G. Kireta, Jr., Copper Development Association, Inc.
A. A. Knapp, Canadian Copper/Brass Development Association
L. McDaniel, Mueller Copper Fittings
T. L. Jamison, *Alternate,* Mueller Industries
G. E. Moino, The American Society of Mechanical Engineers

Copyright ASME International
Provided by IHS under license with ASME
No reproduction or networking permitted without license from IHS
Not for Resale

--`-`-`-`,,`,,`,`,,`---

Copyright ASME International
Provided by IHS under license with ASME
No reproduction or networking permitted without license from IHS

Not for Resale

CAST COPPER ALLOY PIPE FLANGES AND FLANGED FITTINGS: CLASSES 150, 300, 400, 600, 900, 1500, AND 2500

1 GENERAL

1.1 Scope

This Standard for cast copper alloy pipe flanges and flanged fittings covers:

(a) pressure temperature ratings;

(b) sizes and methods of designating openings for reduced fittings;

(c) marking;

(d) materials;

(e) dimensions;

(f) bolts, nuts, and gaskets;

(g) tolerances; and

(h) tests.

1.2 Codes and Regulations

A flange or flanged fitting used under the jurisdiction of the ASME Boiler and Pressure Vessel Code, the ASME Code for Pressure Piping, or a governmental regulation is subject to any limitation of that code or regulation. This includes any maximum temperature limitation, or rule governing the use of a material at low temperature, or provisions for operating at a pressure exceeding the pressure-temperature ratings in this Standard.

1.3 Units of Measurement

U.S. customary units are the standard. For conversion to metric units, use the following:

(a) 1 in. = 25.4 mm

(b) 1 psi = 0.069 bar = 6.9 kPa

(c) °F = 1.8°C + 32

1.4 Quality Systems

Requirements relating to the product manufacturer's quality system programs are described in Nonmandatory Appendix A.

2 PRESSURE-TEMPERATURE RATINGS

2.1 General

The tabulated pressure-temperature ratings shown in Tables 1 and 2 apply to the materials designated in paras. 5.2.1, 5.2.2, 5.3.1, and 5.3.2, and to the dimensions prescribed in Tables 3, 4, 5, and 6. The tabulated pressure-temperature ratings shown in Table 1 apply to the materials designated in para. 5.2.3 and to the dimensions prescribed in ASME B16.5. All ratings are independent of the contained fluid and are the maximum nonshock pressures at the tabulated temperatures. Pressure ratings at temperatures intermediate to those tabulated may be obtained by linear interpolation.

2.2 Ratings of Flanged Joints

Ratings in this Standard apply to flanged joints, which conform to the limitations on bolting in paras. 5.4 and 8(a), and on gaskets in paras. 5.5 and 8(b), and which are made up in accordance with good practice for alignment and assembly. Use of the ratings for flanged joints not conforming to these limitations is the sole responsibility of the user. Requirements for alignment and assembly of joints and consideration of leakage due to forces and moments developed in the connected piping or equipment are not covered in this Standard. If the two flanges in a flanged joint do not have the same pressure-temperature ratings, the rating of the joint at any temperature is the lower of the two flange ratings at that temperature.

2.3 Rating Temperature

The temperature shown for a corresponding pressure rating is the temperature of the pressure-containing shell of the flange or flanged fitting. In general, this temperature is the same as that of the contained fluid.

Copyright ASME International
Provided by IHS under license with ASME
No reproduction or networking permitted without license from IHS
Not for Resale

TABLE 1 PRESSURE–TEMPERATURE RATINGS FOR ALLOYS C83600 AND C92200

	Working Pressure, psig			
	Class 150		Class 300	
Service Temperature, °F	ASTM B 62 C83600	ASTM B 61 C92200	ASTM B 62 C83600	ASTM B 61 C92200
–20 to 150	225	225	500	500
175	220	220	480	490
200	210	215	465	475
225	205	210	445	465
250	195	205	425	450
275	190	200	410	440
300	180	195	390	425
350	165	180	350	400
400	. . .	170	. . .	375
406	150	. . .	. . .	. . .
450	135 (1)	160	280 (1)	350
500	. . .	150	. . .	325
550	. . .	140	. . .	300
Test Pressure	350	350	750	750

NOTE:
(1) Some codes (e.g., ASME Boiler and Pressure Vessel Code, Section I; ASME B31.1; and ASME B31.5) limit the rating temperature of the indicated material to 406°F.

TABLE 2 PRESSURE–TEMPERATURE RATINGS FOR ASTM B 148, ALLOY C95200

	Working Pressure, psig						
Service Temperature, °F	Class 150	Class 300	Class 400	Class 600	Class 900	Class 1500	Class 2500
–20 to 100	195	515	685	1,030	1,545	2,575	4,290
150	165	430	570	855	1,285	2,140	3,570
200	155	400	535	800	1,205	2,005	3,340
250	145	385	510	770	1,150	1,920	3,200
300	140	370	495	740	1,110	1,850	3,085
350	140	365	490	735	1,100	1,835	3,060
400	140	365	485	725	1,090	1,820	3,030
450	140	360	480	725	1,085	1,805	3,010
500	140	360	480	720	1,080	1,800	3,000
Test Pressure	300	775	1,050	1,550	2,325	3,875	6,450

Use of a pressure rating corresponding to a temperature other than that of the contained fluid is the responsibility of the user, subject to the applicable code or regulation. For any temperature below –20°F, the rating shall be no greater than the rating for –20°F.

2.4 Low Temperature Service

When assembled with suitable bolting and gaskets, and subject to the applicable code or regulations, copper alloy flanges and flanged fittings, in accordance with this Standard, may be used at temperatures down to –325°F.

2.5 System Hydrostatic Test

Flanged joints and flanged fittings may be subjected to system hydrostatic tests at pressures not to exceed 1.5 times the tabulated working pressure at 100°F. System testing at higher pressures is the responsibility of the user, subject to the requirements of the applicable code or regulations.

Copyright ASME International
Provided by IHS under license with ASME
No reproduction or networking permitted without license from IHS Not for Resale

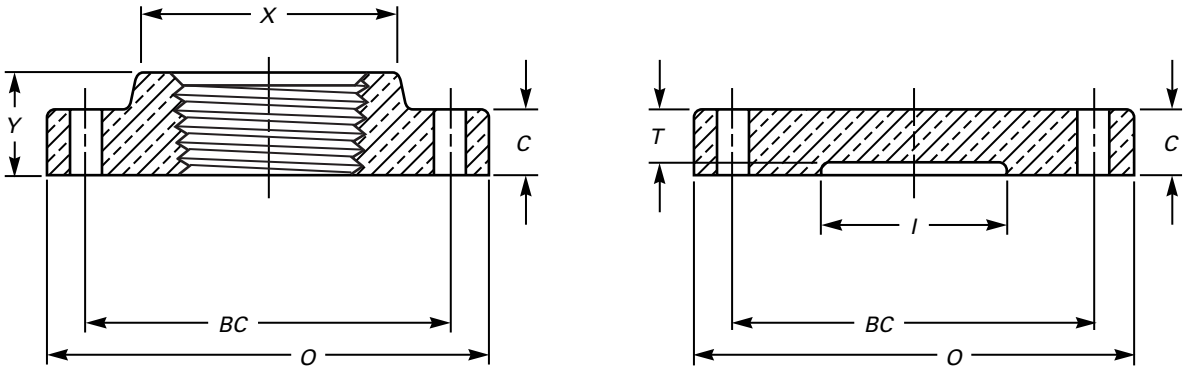

TABLE 3 DIMENSIONS OF CLASS 150 THREADED COMPANION AND BLIND FLANGES[1,2] FOR ALLOYS C83600 AND C92200

Nominal Pipe Size	Diameter of Flange *O*	Thickness of Flange, [Note (3)] Min. *C*	Bolt Circle *BC*	Number of Bolts [Note (4)]	Diameter of Bolts	Diameter of Bolt Hole	Diameter of Hub, Min. *X*	Length Overall, Min. *Y*	Diameter of Counter-bore, Max. *l*	Thickness at Recess, Min. *T*
1/2	3.50	0.31	2.38	4	1/2	0.62	1.19	0.59	0.50	0.25
3/4	3.88	0.34	2.75	4	1/2	0.62	1.25	0.62	0.75	0.28
1	4.25	0.38	3.12	4	1/2	0.62	1.94	0.69	1.00	0.31
1 1/4	4.62	0.41	3.50	4	1/2	0.62	2.31	0.81	1.25	0.34
1 1/2	5.00	0.44	3.88	4	1/2	0.62	2.56	0.88	1.50	0.38
2	6.00	0.50	4.75	4	5/8	0.75	3.06	1.00	2.00	0.44
2 1/2	7.00	0.56	5.50	4	5/8	0.75	3.56	1.12	2.50	0.50
3	7.50	0.62	6.00	4	5/8	0.75	4.25	1.19	3.00	0.56
3 1/2	8.50	0.69	7.00	8	5/8	0.75	4.81	1.25	3.50	0.62
4	9.00	0.69	7.50	8	5/8	0.75	5.31	1.31	4.00	0.62
5	10.00	0.75	8.50	8	3/4	0.88	6.44	1.44	5.00	0.69
6	11.00	0.81	9.50	8	3/4	0.88	7.56	1.56	6.00	0.75
8	13.50	0.94	11.75	8	3/4	0.88	9.69	1.75	8.00	0.88
10	16.00	1.00	14.25	12	7/8	1.00	12.00	1.94	10.00	0.94
12	19.00	1.06	17.00	12	7/8	1.00	14.38	2.19	12.00	1.00

GENERAL NOTE: Dimensions are in inches.

NOTES:
(1) For flange facing, see para. 6.2.
(2) Flange diameters and drilling templates correspond to those prescribed in ASME B16.1, B16.5, and B16.42.
(3) For flange spot facing and thickness, see para. 6.9.
(4) For flanges integral with fittings or valves, see para. 6.8.

Copyright ASME International
Provided by IHS under license with ASME
No reproduction or networking permitted without license from IHS
Not for Resale

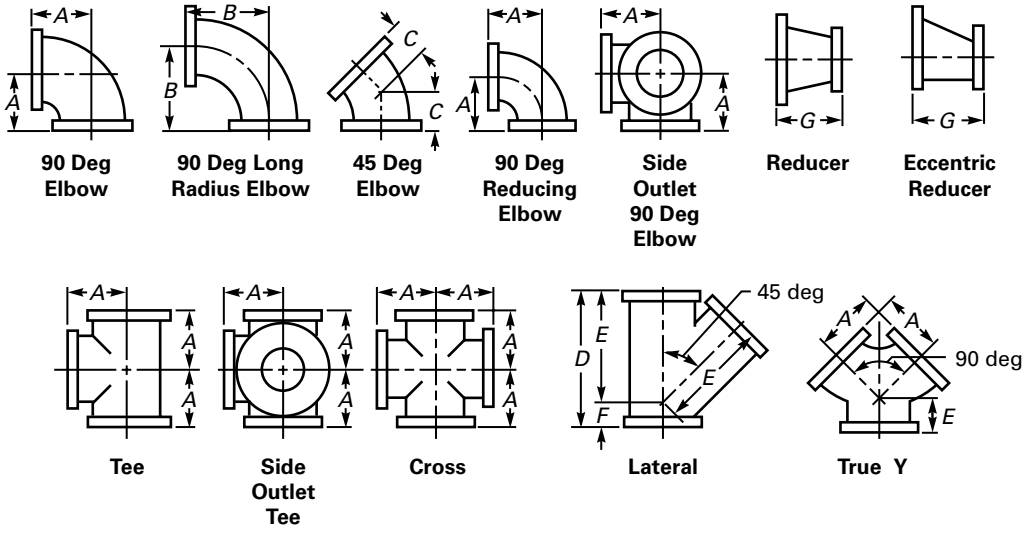

TABLE 4 DIMENSIONS OF CLASS 150 ELBOWS, TEES, CROSSES, LATERALS, TRUE Ys (STRAIGHT SIZES), AND REDUCERS[1,2]

Nominal Pipe Size	Center-to-Face [Notes (3)–(9)] *A*	Face-to-Face *A*+*A*	Center-to-Face [Note (3)] *B*	Center-to-Face [Note (3)] *C*	Face-to-Face [Notes (6),(7)] *D*	Center-to-Face [Notes (6),(7)] *E*	Center-to-Face [Notes (6),(7)] *F*	Face-to-Face [Note (10)] *G*	Wall Thickness [Note (11)] *t*	Minimum Port Diameter *I*
1/2	3.00	6.00	. . .	1.62	. . .	. . .	. . .	. . .	0.09	0.50
3/4	3.25	6.50	. . .	1.75	. . .	. . .	. . .	. . .	0.11	0.75
1	3.50	7.00	5.00	1.75	7.50	5.75	1.75	. . .	0.12	1.00
1 1/4	3.75	7.50	5.50	2.00	8.00	6.25	1.75	. . .	0.14	1.25
1 1/2	4.00	8.00	6.00	2.25	9.00	7.00	2.00	. . .	0.16	1.50
2	4.50	9.00	6.50	2.50	10.50	8.00	2.50	5.00	0.19	2.00
2 1/2	5.00	10.00	7.00	3.00	12.00	9.50	2.50	5.50	0.20	2.50
3	5.50	11.00	7.75	3.00	13.00	10.00	3.00	6.00	0.22	3.00
3 1/2	6.00	12.00	8.50	3.50	14.50	11.50	3.00	6.50	0.25	3.50
4	6.50	13.00	9.00	4.00	15.00	12.00	3.00	7.00	0.27	4.00
5	7.50	15.00	10.25	4.50	17.00	13.50	3.50	8.00	0.30	5.00
6	8.00	16.00	11.50	5.00	18.00	14.50	3.50	9.00	0.33	6.00
8	9.00	18.00	14.00	5.50	22.00	17.50	4.50	11.00	0.41	8.00
10	11.00	22.00	16.50	6.50	25.50	20.50	5.00	12.00	0.48	10.00
12	12.00	24.00	19.00	7.50	30.00	24.50	5.50	14.00	0.56	12.00

GENERAL NOTE: Dimensions are in inches.

NOTES:
(1) For flange and bolt hole dimensions, see Table 3 and para. 6.8.
(2) For center-to-face tolerance, see para. 9.2.
(3) For intersecting center lines of side outlet fittings, see para. 7.1.1.
(4) For center-to-face dimensions of reducing elbows, see para. 7.1.2(b).
(5) For center-to-face dimensions of special degree elbows, see para. 7.1.2(c).
(6) For reinforcements of crosses and laterals, see para. 7.2.
(7) For center-to-face dimensions of reducing tees, crosses, and laterals, see para 7.1.3(a).
(8) For center-to-face dimensions of tees reducing on both runs, see para 7.1.3(b).
(9) For center-to-face dimensions of reducing side outlet tees having two different size reductions on the outlets, see para. 7.1.3(a).
(10) For face-to-face dimensions of reducers and eccentric reducers, see para. 7.1.5.
(11) For wall thickness tolerance, see para. 9.1.

Copyright ASME International
Provided by IHS under license with ASME
No reproduction or networking permitted without license from IHS Not for Resale

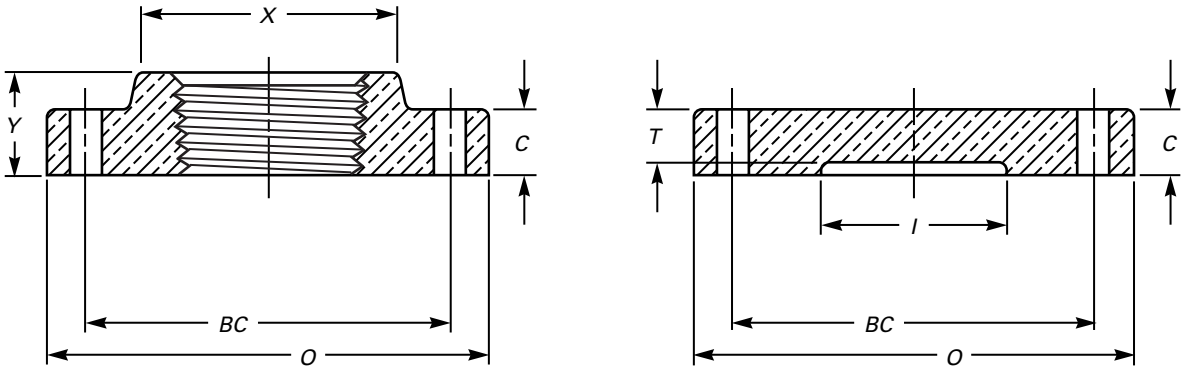

TABLE 5 DIMENSIONS OF CLASS 300 THREADED COMPANION AND BLIND FLANGES[1,4] FOR ALLOYS C83600 AND C92200

Nominal Pipe Size	Diameter of Flange *O*	Thickness of Flange, [Note (2)] Min. *C*	Bolt Circle *BC*	Number of Bolts [Note (3)]	Diameter of Bolts	Diameter of Bolt Hole	Diameter of Hub, Min. *X*	Length Overall, Min. *Y*	Diameter of Counter-bore, Max. *l*	Thickness at Recess, Min. *T*
1/2	3.75	0.50	2.62	4	1/2	0.62	1.19	0.59	0.50	0.44
3/4	4.62	0.53	3.25	4	5/8	0.75	1.50	0.62	0.75	0.47
1	4.88	0.59	3.50	4	5/8	0.75	1.94	0.69	1.00	0.53
1 1/4	5.25	0.62	3.88	4	5/8	0.75	2.31	0.81	1.25	0.56
1 1/2	6.12	0.69	4.50	4	3/4	0.88	2.56	0.88	1.50	0.62
2	6.50	0.75	5.00	8	5/8	0.75	3.06	1.00	2.00	0.69
2 1/2	7.50	0.81	5.88	8	3/4	0.88	3.56	1.12	2.50	0.75
3	8.25	0.91	6.62	8	3/4	0.88	4.25	1.19	3.00	0.84
3 1/2	9.00	0.97	7.25	8	3/4	0.88	4.81	1.25	3.50	0.91
4	10.00	1.06	7.88	8	3/4	0.88	5.31	1.31	4.00	1.00
5	11.00	1.12	9.25	8	3/4	0.88	6.44	1.44	5.00	1.06
6	12.50	1.19	10.62	12	3/4	0.88	7.56	1.56	6.00	1.12
8	15.00	1.38	13.00	12	7/8	1.00	9.69	1.75	8.00	1.31

GENERAL NOTE: Dimensions are in inches.

NOTES:
(1) For flange facing, see para. 6.2.
(2) For flange spot facing and thickness, see para. 6.9.
(3) For flanges integral with fittings or valves, see para. 6.8.
(4) Flange diameters and drilling templates correspond to those prescribed in ASME B16.1, B16.5, and B16.42.

Copyright ASME International
Provided by IHS under license with ASME
No reproduction or networking permitted without license from IHS Not for Resale

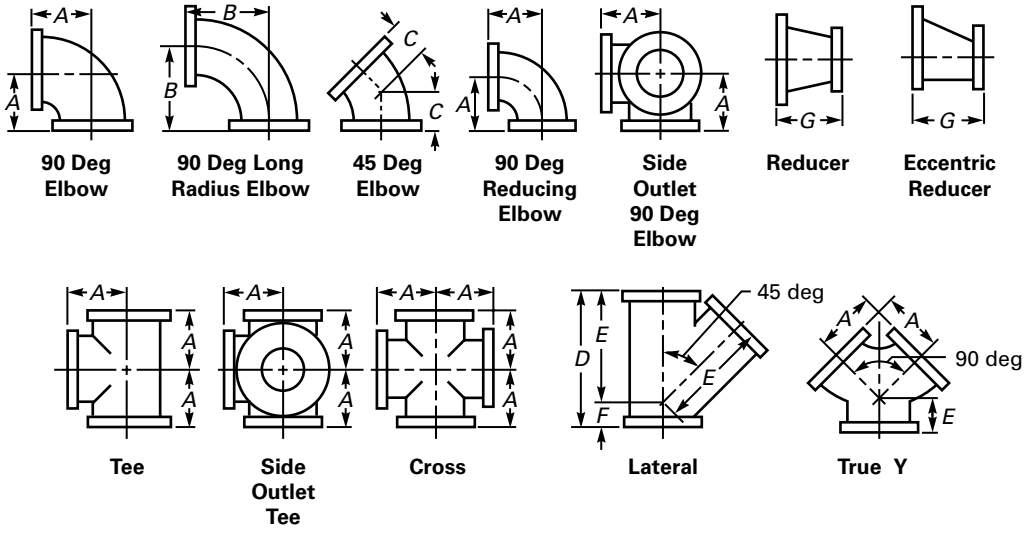

TABLE 6 DIMENSIONS OF CLASS 300 ELBOWS, TEES, CROSSES, LATERALS, TRUE Ys (STRAIGHT SIZES), AND REDUCERS[1,2]

Nominal Pipe Size	Center-to-Face [Notes (3)–(9)] *A*	Face-to-Face *A*+*A*	Center-to-Face [Note (3)] *B*	Center-to-Face [Note (3)] *C*	Face-to-Face [Notes (6),(7)] *D*	Center-to-Face [Notes (6),(7)] *E*	Center-to-Face [Notes (6),(7)] *F*	Face-to-Face [Note (10)] *G*	Wall Thickness [Note (11)] *t*	Minimum Port Diameter *I*
1/2	3.00	6.00	. . .	1.75	. . .	. . .	. . .	. . .	0.12	0.50
3/4	3.50	7.00	. . .	2.25	. . .	. . .	. . .	. . .	0.16	0.75
1	4.00	8.00	5.00	2.25	8.50	6.50	2.00	. . .	0.17	1.00
1 1/4	4.25	8.50	5.50	2.50	9.50	7.25	2.25	. . .	0.19	1.25
1 1/2	4.50	9.00	6.00	2.75	11.00	8.50	2.50	. . .	0.20	1.50
2	5.00	10.00	6.50	3.00	11.50	9.00	2.50	5.00	0.25	2.00
2 1/2	5.50	11.00	7.00	3.50	13.00	10.50	2.50	5.50	0.28	2.50
3	6.00	12.00	7.75	3.50	14.00	11.00	3.00	6.00	0.33	3.00
3 1/2	6.50	13.00	8.50	4.00	15.50	12.50	3.00	6.50	0.36	3.50
4	7.00	14.00	9.00	4.50	16.50	13.50	3.00	7.00	0.41	4.00
5	8.00	16.00	10.25	5.00	18.50	15.00	3.50	8.00	0.48	5.00
6	8.50	17.00	11.50	5.50	21.50	17.50	4.00	9.00	0.56	6.00
8	10.00	20.00	14.00	6.00	25.50	20.50	5.00	11.00	0.72	8.00

GENERAL NOTE: Dimensions are in inches.

NOTES:
(1) For flange and bolt hole dimensions, see Table 5 and para. 6.8.
(2) For center-to-face tolerance, see para. 9.2.
(3) For intersecting center lines of side outlet fittings, see para 7.1.1.
(4) For center-to-face dimensions of reducing elbows, see para. 7.1.2(b).
(5) For center-to-face dimensions of special degree elbows, see para. 7.1.2(c).
(6) For reinforcement of crosses and laterals, see para. 7.2.
(7) For center-to-face dimensions of reducing tees, crosses, and laterals, see para. 7.1.3(a).
(8) For center-to-face dimensions of tees reducing on both runs, see para. 7.1.3(b).
(9) For center-to-face dimensions on reducing side outlet tees having two different size reductions on the outlets, see para. 7.1.3(a).
(10) For face-to-face dimensions of reducers and eccentric reducers, see para. 7.1.5.
(11) For wall thickness tolerance, see para. 9.1.

Copyright ASME International
Provided by IHS under license with ASME
No reproduction or networking permitted without license from IHS Not for Resale

3 SIZE AND METHOD OF DESIGNATING OPENINGS

3.1 Regular Flanges or Fittings

The size of a regular flange or fitting is identified by the corresponding nominal pipe size (NPS).

3.2 Reduced Fittings

Reduced fittings shall be designated by the size of the openings in their proper sequence as indicated in Fig. 1.

4 MARKING

4.1 General

Except as modified herein, flanges and flanged fittings shall be marked as required in MSS SP-25.

4.1.1 Name. The manufacturer's name or trademark shall be applied.

4.1.2 Material. All flanges and flanged fittings shall be marked with the ASTM specification number. In addition, the grade identification symbol ''952'' is required for flanges cast to ASTM B 148.

4.1.3 Rating Class. Numerals shall be applied giving the pressure rating class for which the product is designed.

4.1.4 Designation. The designation ''B16'' shall be applied, preferably located adjacent to the Class designation, to indicate conformance to this Standard.

4.1.5 Size. The nominal pipe size shall be applied but may be omitted from reducing flanges and reducing flanged fittings.

5 MATERIALS

5.1 General

Products covered by this Standard shall be made of castings produced to the requirements of para. 5.2 or 5.3.

5.2 Flanges

Flanges shall be in accordance with one of the material requirements listed below.

5.2.1 Alloy C83600. Castings shall meet the requirements of ASTM B 62.

5.2.2 Alloy C92200. Castings shall meet the requirements of ASTM B 61.

5.2.3 Alloy C95200. Castings shall meet the requirements of ASTM B 148 and the additional requirements listed below.

5.2.3.1 Ordering Information. Ordering information shall include tests on each lot and the form of the test bar.

5.2.3.2 Sampling. The sample for chemical analysis shall be taken from the test bar casting or other casting sample in such a manner as to be representative of each casting lot.

5.2.3.3 Test Bars. A minimum of three test bars shall be poured from each lot of cast metal.

5.2.3.4 Weld Repair Approval. A flange casting shall not be repaired, plugged, welded, or burned-in unless permission from the user of the flange has been previously secured. This will be requested of the user upon the manufacturer's determination that casting defects are such that after the approved repair, the usefulness and the strength of the casting will not be impaired.

5.2.3.5 Weld Repair. Preparation for repair welding shall include inspection to ensure complete removal of the defect. Repairs shall be made utilizing welding procedures qualified in accordance with Section IX of the ASME Boiler and Pressure Vessel Code. Repair welding shall be done by welders or welding operators meeting the qualification requirements of that Code.

5.3 Flanged Fittings

Flanged fittings shall be in accordance with one of the material requirements listed below.

5.3.1 Alloy C83600. Castings shall meet the requirements of ASTM B 62.

5.3.2 Alloy C92200. Castings shall meet the requirements of ASTM B 61.

5.4 Bolting

Bolting materials recommended for use with copper alloy flanges and flanged fittings are described in paras. 5.4.1 and 5.4.2 below.

Copyright ASME International
Provided by IHS under license with ASME
No reproduction or networking permitted without license from IHS
Not for Resale

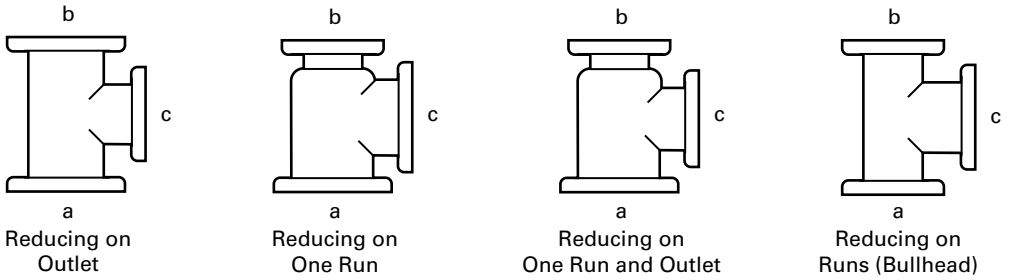

Reducing Tees

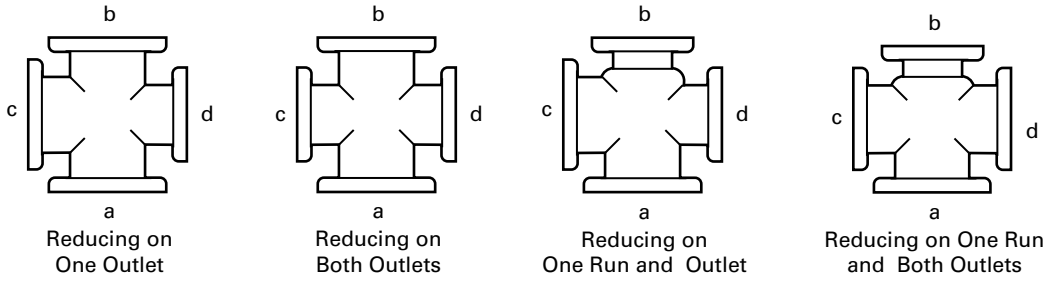

Reducing Crosses

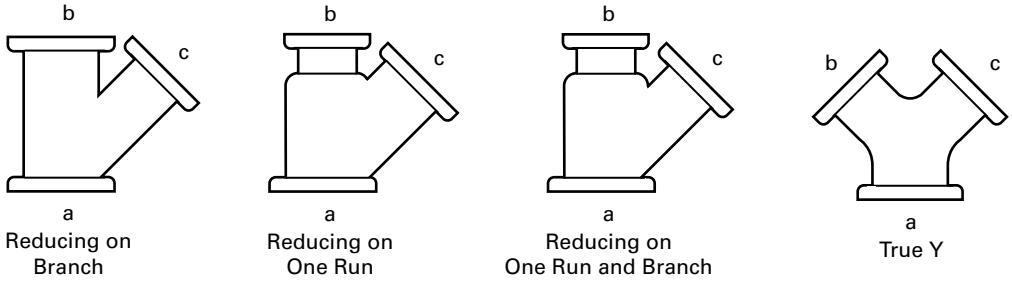

Reducing Laterals



Side Outlet Tee **Side Outlet Elbow**

GENERAL NOTES:

(a) In designating the openings of reducing fittings, they should be read in the order indicated by the sequence of the letters a, b, c, and d. In designating the outlets of side outlet reducing fittings, the side outlet is named last and in the case of the cross which is not shown, the side outlet is designated by the letter e.

(b) The largest opening establishes the basic size of a reducing fitting. The largest opening is named first, except for bullhead tees, which are reducing on both runs, and for double branch elbows where both branches are reducing, the outlet is the largest opening and named last in both cases. (Double branch elbows are not included in this Standard.)

FIG. 1 METHOD OF DESIGNATING OUTLETS OF REDUCING FITTINGS

Copyright ASME International
Provided by IHS under license with ASME
No reproduction or networking permitted without license from IHS Not for Resale

5.4.1 Steel Bolting. Bolting material having allowable stresses not less than those for ASTM A 193 Gr B7 are listed as high strength in Table 1B in ASME B16.5. These and other materials of comparable strength may be used in any flanged joint. Carbon steel bolting conforming to ASTM A 307 shall not be used below −20°F nor above 400°F and is limited to use with Class 150 and 300.

5.4.2 Nonferrous Boltings. The following nonferrous materials may be used for Class 150 and 300 within the temperature limitation stated. Other bolting materials that have at least a 30 ksi specified minimum yield strength may be used when permitted by the applicable code or regulation.

ASTM Spec.	Alloy UNS No.	Condition	Notes
B 98	C65100	Half Hard	(1)
	C65500	Half Hard	(1)
	C66100	Half Hard	(1)
B 150	C61400		(2)
	C63000		(2)
	C64200		(2)
B 164	N04400	Hot Finish	
	N04400	Cold Drawn	(2)
	N04400	Cold Drawn, Stress Relieved	(2)
	N04400	Cold Drawn, Stress Equalized	(2)
	N04405	Hot Finish	
	N04405	Cold Drawn	(2)

NOTES:
(1) Maximum operating temperature is 350°F.
(2) Maximum operating temperature is 550°F.

5.5 Gaskets

Materials for gaskets are described in Annex E of ASME B16.5. The user is responsible for selection of gasket materials that will withstand the expected bolt loading without injurious crushing and that are suitable for the service conditions. Particular attention needs to be given to gasket selection if the user elects to use a hydrostatic test pressure that exceeds the test pressure specified in para. 2.5.

5.6 Materials Selection

Criteria for the selection of materials are not within the scope of this Standard. The possibility of material deterioration in service should be considered by the user. A discussion of precautionary considerations can be found in Appendix F of ASME B31.3.

6 FLANGE DIMENSIONS

6.1 General

Flange dimensions are dependent upon the flange casting material.

6.1.1 Alloys C83600 and C92200. The flange dimensions shall be in accordance with Tables 3 and 5 with alternative facings as permitted in para. 6.2.

6.1.2 Alloy C95200. The flange dimensions shall be in accordance with the dimensional requirements of ASME B16.5.

6.2 End Flange Facings

Class 150 and 300 blind and companion flanges are regularly furnished with a flat face. Class 400 and higher companion flanges are regularly furnished with a 0.25 in. raised face, with the exception of the small male face (on end of pipe) and the small female face (on end of pipe). When using straight pipe threads, any of the flange pipe threads shown in ASME B16.5 may be used with copper alloy flanges. When flanges of alloy C83600 or alloy C92200 are furnished with one of the alternative ASME B16.5 facings, any required raised face dimension shall be in addition to the basic flange thickness C of Tables 3 and 5.

6.3 Threaded Flanges

Threaded flanges shall have a taper pipe thread in accordance with ASME B1.20.1. Variations in alignment of the thread with the axis of the flange shall not exceed 0.06 in./ft.

6.4 Thread Chamfer

All flanges of alloy C83600 and C92200 shall be made without a counterbore. The threads shall be chamfered approximately to the major diameter of the thread at the pipe end of the flange at an angle approximately 45 deg with the axis of the thread. The chamfer shall be concentric with the thread and shall be included in the measurement of the thread length.

6.5 Thread Length

The length of the thread shall include the chamfer.

6.6 Thread Gaging

The gaging notch of the thread gage shall come flush with the bottom of the chamfer in all threaded

Copyright ASME International
Provided by IHS under license with ASME
No reproduction or networking permitted without license from IHS
Not for Resale

flanges, and shall be considered the intersection of the chamfer cone and the pitch cone of the thread. This depth of chamfer is approximately equal to one-half the pitch of the thread. The maximum allowable thread variation is one turn large or small from the gaging notch.

6.7 Threaded Flange Assembly

External pipe threads used with higher pressure flanges must be longer than normal to bring the end of the pipe close to the face of the flange when parts are assembled by power equipment. The additional length and number of turns are shown in Annex A of ASME B16.5 for ASME B1.20.1 threads.

6.8 Integral Flanges

When flanges are integral with fittings or valves, pairs of bolt holes shall straddle the center line.

6.9 Spot and Back Facing

Flanges and flanged fittings covered by this Standard shall have bearing surfaces for bolting that shall be parallel to the flange face within 1 deg. Any spot or back facing shall not reduce the flange thickness *C* below the dimension required by para. 6.1. The spot facing diameter shall be in accordance with MSS-SP-9. When cutting into the hub of flanges or flanged fittings with back facing tools, the intersection shall have a radius of not less than 0.06 in.

7 FITTING DIMENSIONS

7.1 Center-to-Face Dimensions

7.1.1 Side Outlet Fittings. Side outlet elbows and side outlet tees shall have all openings on intersecting center lines.

7.1.2 Elbows

(a) The center-to-face dimensions for straight size 90 deg elbows, 90 deg long radius elbows, 45 deg elbows, and side outlet 90 deg elbows are shown in Tables 4 and 6.

(b) Reducing 90 deg elbows and reducing side outlet 90 deg elbows shall have the same center-to-face dimensions as straight size fittings shown in Tables 4 and 6, corresponding to the size of the largest opening.

(c) Special degree elbows ranging from 1 to 45 deg, inclusive, shall have the same center-to-face dimensions given for 45 deg elbows and those over 45 deg and up to 90 deg, inclusive, shall have the same center-to-face dimensions given for 90 deg elbows. The angle designation of an elbow is its deflection from straight line flow and is the angle between the flange faces.

7.1.3 Tees, Crosses, and Laterals

(a) The center-to-face dimensions for straight size tees, with or without side outlet, crosses, and laterals are shown in Tables 4 and 6.

(b) Reducing tees, with or without side outlet, reducing crosses, and reducing laterals shall have the same center-to-face dimensions as straight size fittings shown in Tables 4 and 6, corresponding to the size of the largest opening. Tees, crosses, and laterals, reducing on the run only, shall have the same center-to-face dimensions as straight size fittings shown in Tables 4 and 6, corresponding to the size of the largest opening.

(c) Tees reducing on both runs are generally known as bullhead tees and have the same center-to-face dimensions as straight size fittings corresponding to the size of the outlet.

7.1.4 True Ys. Center-to-face dimensions for straight size true Ys are shown in Tables 4 and 6. Reducing sizes are considered special and should be made to suit conditions.

7.1.5 Reducers and Eccentric Reducers. The face-to-face dimensions for all combinations of reducers and eccentric reducers shall be the same as given in Tables 4 and 6 for the larger opening.

7.1.6 Interchangeability. Class 150 flanged fittings in NPS 1 and larger have a bolting pattern that is dimensionally interchangeable with Class 125 Cast Iron Flanged Fittings (ASME B16.1), Class 150 Steel Flanged Fittings (ASME B16.5), and Class 150 Ductile Iron Flanged Fittings (ASME B16.42). Class 300 flanged fittings in NPS 1 and larger have a bolting pattern that is dimensionally interchangeable with Class 250 Cast Iron Flanged Fittings (ASME B16.1), Class 300 Steel Flanged Fittings (ASME B16.5), and Class 300 Ductile Iron Flanged Fittings (ASME B16.42).

7.2 Wall Thickness

For inspection purposes, the minimum wall thickness *t*, of flanged fittings at the time of manufacture, shall be as shown in Tables 4 and 6, except as provided in para. 9.1. Additional metal thickness needed to withstand assembly stresses, shapes other than circular, and stress concentrations must be determined by the manufacturer. In particular, 45 deg laterals, true Ys, and crosses

Copyright ASME International
Provided by IHS under license with ASME
No reproduction or networking permitted without license from IHS
Not for Resale

may require additional reinforcement to compensate for inherent weaknesses in these shapes.

8 BOLTING, NUTS, AND GASKETS

(a) For carbon steel and nonferreous bolting smaller than $^{3}/_{4}$ in., ASME Standard Square Heads, ASME Standard Heavy Hex Heads (ASME B18.2.1), or ASME Standard Heavy Hex Nuts (ASME B18.2.2) are recommended. For carbon steel and nonferrous bolting $^{3}/_{4}$ in. and larger, ASME Standard Heads, ASME Standard Hex Heads (ASME B18.2.1), ASME Standard Hex Nuts, or ASME Heavy Hex Nuts (ASME B18.2.2) are recommended.

All bolting and nuts shall be threaded in accordance with ASME Standard Unified Screw Threads (ASME B1.1), Coarse Thread Series, Class 2A and Class 2B.

(b) Full-faced gaskets extending to the flange edge as given in ASME B16.21, are required for flat-faced surfaces such as shown in Tables 3 and 5. Metallic gaskets shall not be used with flat-faced flanges.

If bolting material is either carbon steel or nonferrous, compressed sheet gaskets that are less than 0.12 in. thick should not be used.

9 TOLERANCES[1]

9.1 Wall Thickness

Fittings with local areas having less than minimum wall thickness will be acceptable provided that:

(a) the area of subminimum thickness can be enclosed by a circle whose diameter is no greater than $0.35\sqrt{dt}$ where d is the inside diameter and t is the minimum wall thickness, as shown in Tables 4 and 6;

(b) measured thickness is not less than $0.9t$;

(c) enclosure circles are separated from each other by an edge-to-edge distance of not less than $1.75\sqrt{dt}$.

[1] Unless otherwise stated, tolerances are equal, plus and minus.

9.2 Center-to-Face

The following tolerances shall be permitted on all center-to-contact surface dimensions of fittings:

Nominal Pipe Size	Plus or Minus
10 and smaller	0.03 in.
12	0.06 in.

Tolerances for contact surface-to-contact surface dimensions shall be twice those given above. The largest opening in the fitting governs the tolerance to be applied to all openings.

9.3 Facings

9.3.1 Outside Diameter, 0.25 in. raised face, 0.02 in.

9.4 Flange Thickness

Sizes NPS 12 and smaller — +0.12 in.
−zero

9.5 Counterbore, Threaded Flanges

Sizes NPS 10 and smaller — +0.03 in.
−zero
Sizes NPS 12 and larger — +0.06 in.
−zero

9.6 Drilling and Facing

9.6.1 Bolt Circle Diameter ±0.06 in.

9.6.2 Center-to-Center of adjacent bolt holes ±0.03 in.

10 TESTS

10.1 Flange Testing

Flanges are not required to be pressure tested.

Copyright ASME International
Provided by IHS under license with ASME
No reproduction or networking permitted without license from IHS
Not for Resale

Copyright ASME International
Provided by IHS under license with ASME
No reproduction or networking permitted without license from IHS
Not for Resale

MANDATORY APPENDIX I
REFERENCES

The following is a list of standards and specifications referenced in this Standard, showing the year of approval (ASME publications are approved as American National Standards):

ASME B1.1-1989 Unified Inch Screw Threads (UN and UNR Thread Form)
ASME B1.20.1-1983 (R1992) Pipe Threads, General Purpose (Inch)
ASME B16.1-1998 Cast Iron Pipe Flanges and Flanged Fittings, Class 25, 125, 250 and 800
ASME B16.5-1996 Steel Pipe Flanges and Flanged Fittings, Including Ratings for Class 150, 300, 400, 600, 900, 1500 and 2500
ASME B16.21-1992 Nonmetallic Flat Gaskets for Pipe Flanges
ASME B18.2.1-1996 Square and Hex Bolts and Screws
ASME B18.2.2-1987 (R1999) Square and Hex Nuts
ASME B31.1-1998 Power Piping
ASME B31.5-1992 Refrigeration Piping
ASME BPV-I-1998 Power Boilers

Publisher: The American Society of Mechanical Engineers (ASME), 3 Park Avenue, New York, NY 10016; ASME Order Department, 22 Law Drive, Box 2300, Fairfield, NJ 07007-2300

ASTM A 193/A 193M-00 Standard Specification for Alloy-Steel and Stainless Steel Bolting Materials for High-Temperature Service
ASTM A 307-97 Standard Specification for Carbon Steel Externally and Internally Threaded Standard Fasteners
ASTM B 61-93 Standard Specification for Steam or Valve Bronze Castings
ASTM B 62-93 Standard Specification for Composition Bronze or Ounce Metal Castings
ASTM B 98/B 98M-98 Standard Specification for Copper-Silicon Alloy Rod, Bar and Shapes
ASTM B 148-97 Standard Specification for Aluminum-Bronze Sand Castings
ASTM B 150-98e2 Standard Specification for Aluminum Bronze Rod, Bar and Shapes
ASTM B 164-98 Standard Specification for Nickel-Copper Alloy Rod and Bar

Publisher: American Society for Testing and Materials (ASTM), 1916 Race Street, Philadelphia, PA 19103

ISO 9000-1: 1994, Quality management and quality assurance standards Part 1: Guidelines for selection and use
ISO 9000-2: 1997, Quality management and quality assurance standards Part 2: Generic guidelines for the application of ISO 9001, ISO 9002, and ISO 9003
ISO 9000-3: 1997, Quality management and quality assurance standards Part 3: Guidelines for the application of ISO 9001 to the development, supply, installation, and maintenance of computer software
ISO 9001: 1994, Quality systems Model for quality assurance in design, development, production, installation, and servicing
ISO 9002: 1994, Quality systems Model for quality assurance in production, installation, and servicing
ISO 9003: 1994, Quality systems Model for quality assurance in final inspection and test

Publisher: International Organization for Standardization (ISO), 1 rue de Varembé, Case postale 56, Genève 20, Switzerland/Suisse CH-1121

MSS SP-6-1996 Standard Finishes for Contact Faces of Pipe Flanges and Connecting-End Flanges of Valves and Fittings
MSS SP-9-1997 Spot Facing for Bronze, Iron and Steel Flanges
MSS SP-25-98 Standard Marking System for Valves, Fittings, Flanges and Unions

Publisher: Manufacturers Standardization Society of the Valve and Fittings Industry (MSS), 127 Park Street, N.E., Vienna, VA 22180

Publications appearing above that have been approved as American National Standards may also be obtained from:

ANSI
American National Standards Institute, Inc.
1430 Broadway
New York, NY 10018

Copyright ASME International
Provided by IHS under license with ASME
No reproduction or networking permitted without license from IHS
Not for Resale

NONMANDATORY APPENDIX A
QUALITY SYSTEM PROGRAM

The products manufactured in accordance with this Standard shall be produced under a quality system program following the principles of an appropriate standard from the ISO 9000 series.[1] A determination of the need for registration and/or certification of the product manufacturer's quality system program by an independent organization shall be the responsibility of the manufacturer. Detailed documentation demonstrating program compliance shall be available to the purchaser at the manufacturer's facility. A written, summarized description of the program used by the product manufacturer shall be available to the purchaser upon request. The product manufacturer is defined as the entity whose name or trademark appears on the product in accordance with the marking or identification requirements of this Standard.

[1] The series is also available from the American National Standards Institute (ANSI) and the American Society for Quality (ASQ) as American National Standards that are identified by a prefix ''Q'' replacing the prefix ''ISO.'' Each standard of the series is listed in Nonmandatory Appendix A.

Copyright ASME International
Provided by IHS under license with ASME
No reproduction or networking permitted without license from IHS
Not for Resale

AMERICAN NATIONAL STANDARDS FOR PIPING, PIPE FLANGES, FITTINGS, AND VALVES

Scheme for the Identification of Piping Systems A13.1-1996
Pipe Threads, General Purpose (Inch) ..... B1.20.1-1983(R1992)
Dryseal Pipe Threads (Inch) ..... B1.20.3-1976(R1998)
Cast Iron Pipe Flanges and Flanged Fittings: Classes 25, 125, and 250 ..... B16.1-1998
Malleable Iron Threaded Fittings: Classes 150 and 300 ..... B16.3-1998
Gray Iron Threaded Fittings: Classes 125 and 250 ..... B16.4-1998
Pipe Flanges and Flanged Fittings (NPS ½ Through NPS 24) B16.5-1996
Factory-Made Wrought Buttwelding Fittings B16.9-2001
Face-to-Face and End-to-End Dimensions of Valves B16.10-2000
Forged Fittings, Socket-Welding and Threaded B16.11-2001
Cast Iron Threaded Drainage Fittings B16.12-1998
Ferrous Pipe Plugs, Bushings, and Locknuts with Pipe Threads B16.14-1991
Cast Bronze Threaded Fittings: Classes 125 and 250 ..... B16.15-1985(R1994)
Cast Copper Alloy Solder Joint Pressure Fittings ..... B16.18-1984(R1994)
Metallic Gaskets for Pipe Flanges: Ring-Joint, Spiral-Wound, and Jacketed B16.20-1998
Nonmetallic Flat Gaskets for Pipe Flanges B16.21-1992
Wrought Copper and Copper Alloy Solder Joint Pressure Fittings B16.22-1995
Cast Copper Alloy Solder Joint Drainage Fittings — DWV B16.23-1992
Cast Copper Alloy Pipe Flanges and Flanged Fittings: Class 150, 300, 400, 600, 900, 1500, and 2500 ..... B16.24-2001
Buttwelding Ends B16.25-1997
Cast Copper Alloy Fittings for Flared Copper Tubes B16.26-1988
Wrought Steel Buttwelding Short Radius Elbows and Returns B16.28-1994
Wrought Copper and Wrought Copper Alloy Solder Joint Drainage Fittings — DWV B16.29-1994
Manually Operated Metallic Gas Valves for Use in Gas Piping Systems up to 125 psig (Sizes ½ Through 2) B16.33-1990
Valves — Flanged, Threaded, and Welding End B16.34-1996
Orifice Flanges B16.36-1996
Large Metallic Valves for Gas Distribution (Manually Operated, NPS 2½ to 12, 125 psig Maximum) ..... B16.38-1985(R1994)
Malleable Iron Threaded Pipe Unions B16.39-1998
Manually Operated Thermoplastic Gas Shutoffs and Valves in Gas Distribution Systems ..... B16.40-1985(R1994)
Functional Qualification Requirements for Power Operated Active Valve Assemblies for Nuclear Power Plants ..... B16.41-1983(R1989)
Ductile Iron Pipe Flanges and Flanged Fittings, Classes 150 and 300 ..... B16.42-1998
Manually Operated Metallic Gas Valves for Use in House Piping Systems B16.44-1995
Cast Iron Fittings for Sovent® Drainage Systems B16.45-1998
Large Diameter Steel Flanges (NPS 26 Through NPS 60) B16.47-1996
Steel Line Blanks B16.48-1997
Factory-Made Wrought Steel Buttwelding Induction Bends for Transportation and Distribution Systems B16.49-2000
Power Piping B31.1-1998
Fuel Gas Piping (not an ANSI standard) B31.2-1968
Process Piping B31.3-1999
Pipeline Transportation Systems for Liquid Hydrocarbons and Other Liquids B31.4-1998
Refrigeration Piping and Heat Exchanger Components B31.5-2000
Gas Transmission and Distribution Piping Systems B31.8-1999
Building Services Piping B31.9-1996
Slurry Transportation Piping Systems ..... B31.11-1989(R1998)
Manual for Determining the Remaining Strength of Corroded Pipelines B31G-1991
Welded and Seamless Wrought Steel Pipe B36.10M-1996
Stainless Steel Pipe ..... B36.19M-1985(R1994)

Copyright ASME International
Provided by IHS under license with ASME
No reproduction or networking permitted without license from IHS
Not for Resale

Self-Operated and Power-Operated Safety-Related Valves Functional Specification Standard . . . . . N278.1-1975(R1992)

The ASME Publications Catalog shows a complete list of all the Standards published by the Society. For a complimentary catalog, or the latest information about our publications, call 1-800-THE-ASME (1-800-843-2763).

Copyright ASME International
Provided by IHS under license with ASME
No reproduction or networking permitted without license from IHS
Not for Resale



Copyright ASME International
Provided by IHS under license with ASME
No reproduction or networking permitted without license from IHS

Not for Resale