Errata
to
ASME B16.23-2002
Cast Copper Alloy Solder Joint Drainage Fittings: DWV

On page viii, Committee Roster revised. Revisions appear on the overleaf.

THE AMERICAN SOCIETY OF MECHANICAL ENGINEERS
Three Park Avenue, New York, NY 10016-5990

March 2003

J1402E

Copyright ASME International
Provided by IHS under license with ASME
No reproduction or networking permitted without license from IHS

Not for Resale

ASME B16 COMMITTEE
Standardization of Valves, Flanges, Fittings, Gaskets, and Valve Actuators

(The following is the roster of the Committee at the time of approval of this Standard.)

OFFICERS

W. N. McLean, *Chair*
H. R. Sonderegger, *Vice Chair*
P. A. Reddington, *Secretary*

COMMITTEE PERSONNEL

R. W. Barnes, Anric Enterprises
R. R. Brodin, Fisher Controls International, Inc.
T. A. McMahon, *Alternate,* Fisher Controls International, Inc.
M. A. Clark, Nibco, Inc.
A. Cohen, Arthur Cohen and Associates
C. E. Floren, Mueller Co.
D. R. Frikken, Solutia, Inc.
G. A. Jolly, Vogt Valve Co.
W. G. Knecht, Retired
R. Koester, The William Powell Co.
W. N. McLean, Newco Valves
M. L. Nayyar, Bechtel Power Corp.
P. A. Reddington, The American Society of Mechanical Engineers
R. A. Schmidt, Trinity-Ladish Co.
H. R. Sonderegger, Anvil International, Inc.
W. M. Stephan, Flexitallic, Inc.
T. F. Stroud, Ductile Iron Pipe Research Association
R. E. White, Richard E. White and Associates
D. A. Williams, Southern Company Services
L. A. Willis, The Dow Chemical Co.
W. R. Worley, Consultant

SUBCOMMITTEE J — COPPER AND COPPER ALLOY FLANGES, FLANGED FITTINGS, AND SOLDER JOINT FITTINGS

M. A. Clark, *Chair,* Nibco, Inc.
A. G. Kireta, Jr., *Vice Chair,* Copper Development Association, Inc.
G. E. Moino, *Secretary,* The American Society of Mechanical Engineers
D. F. Buccicone, Elkhart Products Corp.
A. Cohen, Arthur Cohen and Associates
D. R. Frikken, Solutia, Inc.
A. A. Knapp, Canadian Copper/Brass Development Association
L. McDaniel, Mueller Copper Fittings, LP
T. L. Jamison, *Alternate,* Mueller Industries

Copyright ASME International
Provided by IHS under license with ASME
No reproduction or networking permitted without license from IHS
Not for Resale

ASME B16.23-2002
(Revision of ASME B16.23-1992)

CAST COPPER ALLOY SOLDER JOINT DRAINAGE FITTINGS: DWV

AN AMERICAN NATIONAL STANDARD

Copyright ASME International
Provided by IHS under license with ASME
No reproduction or networking permitted without license from IHS

The American Society of Mechanical Engineers

Not for Resale

The American Society of Mechanical Engineers

AN AMERICAN NATIONAL STANDARD

CAST COPPER ALLOY SOLDER JOINT DRAINAGE FITTINGS: DWV

ASME B16.23-2002

(Revision of ASME B16.23-1992)

Copyright ASME International
Provided by IHS under license with ASME
No reproduction or networking permitted without license from IHS

Not for Resale

Date of Issuance: November 8, 2002

The next edition of this Standard is scheduled for publication in 2007. There will be no addenda issued to this edition.

ASME issues written replies to inquiries concerning interpretations of technical aspects of this Standard. Interpretations are published on the ASME Web site under the Committee Pages at http://www.asme.org/codes/ as they are issued.

ASME is the registered trademark of The American Society of Mechanical Engineers.

This code or standard was developed under procedures accredited as meeting the criteria for American National Standards. The Standards Committee that approved the code or standard was balanced to assure that individuals from competent and concerned interests have had an opportunity to participate. The proposed code or standard was made available for public review and comment that provides an opportunity for additional public input from industry, academia, regulatory agencies, and the public-at-large.

ASME does not "approve," "rate," or "endorse" any item, construction, proprietary device, or activity.

ASME does not take any position with respect to the validity of any patent rights asserted in connection with any items mentioned in this document, and does not undertake to insure anyone utilizing a standard against liability for infringement of any applicable letters patent, nor assume any such liability. Users of a code or standard are expressly advised that determination of the validity of any such patent rights, and the risk of infringement of such rights, is entirely their own responsibility.

Participation by federal agency representative(s) or person(s) affiliated with industry is not to be interpreted as government or industry endorsement of this code or standard.

ASME accepts responsibility for only those interpretations of this document issued in accordance with the established ASME procedures and policies, which precludes the issuance of interpretations by individuals.

No part of this document may be reproduced in any form,
in an electronic retrieval system or otherwise,
without the prior written permission of the publisher.

The American Society of Mechanical Engineers
Three Park Avenue, New York, NY 10016-5990

Copyright © 2002 by
THE AMERICAN SOCIETY OF MECHANICAL ENGINEERS
All Rights Reserved
Printed in U.S.A.

Copyright ASME International
Provided by IHS under license with ASME
No reproduction or networking permitted without license from IHS

Not for Resale

CONTENTS

Foreword vi
Standards Committee Roster viii
Correspondence With the B16 Committee ix

1 Scope 1

2 Description 2

3 Pitch (Slope) 2

4 Abbreviations 2

5 Size 2

6 Marking 2

7 Material 2

8 Metal Thickness 2

9 Inspection Tolerance 2

10 Threaded Ends 3

11 Configuration of Threaded Ends 3

Figures

1 Size Sequence of Fittings 1
2 Typical Laying Lengths of DWV 90 deg Elbows 3

Tables

1 Inspection Tolerance Table 3
2 Dimensions of Solder Joint Ends — DWV 4
3 Dimensions of Threaded Ends — DWV 5
4 Dimensions for DWV Couplings, Reducers, Extended Bushings, and Flush Bushings 6
5 Dimensions of DWV Adapters 7
6 Dimensions of DWV Short Adapters 8
7 Dimensions of DWV Trap Adapters 8
8 Dimensions of C to Soil Pipe Adapter for Joining to Extra Heavy Soil Pipe 9
9 Dimensions of C to Soil Pipe Adapter — Plain End for Joining to Extra Heavy Soil Pipe 10
10 Dimensions of C × No-Hub Soil Pipe Adapter 11
11 Dimensions of C × Hub Soil Pipe Adapter 12

Copyright ASME International
Provided by IHS under license with ASME
No reproduction or networking permitted without license from IHS
Not for Resale

12 Dimensions of DWV 45 deg Y With Cleanout — Soil Pipe (Spigot) × C × Cleanout 12
13 Dimensions of DWV Elbows and Double Elbows — C × C 13
14 Dimensions of Reducing DWV Single and Double Elbows C × C 14
15 Dimensions of DWV Elbows 15
16 Dimensions of DWV Reducing Elbows 16
17 Dimensions of DWV Elbows 16
18 Dimensions of DWV Tees and Double Tees 17
19 Dimensions of DWV Tees and Double Tees 18
20 Dimensions of DWV Trap Tees 19
21 Dimensions of DWV Double and Quadruple Branch Fittings 19
22 Dimensions of Short Design DWV Tees With Side Inlet(s) (90 deg to Main Inlet), Single and Double 19
23 Dimensions of Short Design DWV Tees With Side Inlet(s) (45 deg to Main Inlet), Single and Double 20
24 Dimensions of Long Design DWV Tees With Side Inlet(s) (90 deg to Main Inlet), Single and Double 20
25 Dimensions of Long Design DWV Tees With Side Inlet(s) (45 deg to Main Inlet), Single and Double 21
26 Dimensions of Single and Double DWV 45 deg Ys 22
27 Dimensions of DWV 45 deg Ys 23
28 Dimensions for DWV Horizontal Twin Branch Tees 23
29 Dimensions for DWV Fitting Tees, Single and Double 23
30 Dimensions for DWV Utility Tees 24
31 Dimensions of DWV Fitting Tees With Side Inlet Maximum Below Center Line 24
32 Dimensions of DWV Long Turn T–Ys, Single and Double 25
33 Dimensions of DWV Double Short T–Y 26
34 Dimensions of DWV Double Short T–Y 26
35 Dimensions of DWV Elbow With Inlets 26
36 Dimensions of DWV Double Branch Sink Fittings 27
37 Dimensions of DWV Closet Offset Fittings 27
38 Dimensions of DWV 90 deg Closet Elbow 28
39 Dimensions of Floor Flange Vent Support 28
40 Dimensions of DWV Closet Ells With Side Inlet(s) (90 deg and 45 deg) to Main Inlet(s) 29
41 Dimensions of DWV Closet Ells With or Without Side Inlet(s) (90 deg and 45 deg) to Main Inlet(s) 30
42 Dimensions of DWV Closet Flanges 31
43 Dimensions of Vent Tees and Vent Double Tees 32
44 Dimensions of Vent Elbows 32
45 Dimensions of DWV Stack Upturns, Single and Double 32
46 Dimensions of Slip Joint Pieces 33
47 Dimensions of Trap Coupling 33
48 Dimensions of Trap Extended Bushings 33
49 Dimensions of Slip Joint Ends 34
50 Dimensions of DWV Cap 34
51 Dimensions of DWV Plugs 34
52 Dimensions of DWV Drum Traps 35
53 Dimensions of DWV Swivel Drum Trap 36
54 Dimensions of DWV Traps 37
55 Dimensions of DWV Test Tees With Plug 38

Copyright ASME International
Provided by IHS under license with ASME
No reproduction or networking permitted without license from IHS
Not for Resale

56 Dimensions of DWV Plugs 38

Mandatory Appendices

I U.S. Customary Tables 39
II References 76

Nonmandatory Appendix

A Quality System Programs 77

Copyright ASME International
Provided by IHS under license with ASME
No reproduction or networking permitted without license from IHS
Not for Resale

FOREWORD

Standardization work on solder joint fittings began in 1936 in Subcommittee 11 of Sectional Committee A40, Minimum Requirements for Plumbing and Standardization of Plumbing Equipment, organized within the American Standards Association (ASA). It resulted in the publication, in January 1941 of ASA A40.3-1941. That standard covered only supply (pressure) fittings.

In 1949, responsibility for solder joint fittings was transferred to newly formed Subcommittee 9 of Sectional Committee B16 on Standardization of Pipe Flanges and Fittings. The next revision of A40.3 appeared as ASA B16.18-1950, Cast-Brass Solder-Joint Fittings. During its development, however, the need for separate standards for wrought copper and wrought bronze supply fittings and for solder joint drainage fittings was recognized.

Work on the wrought fitting standard was undertaken by a joint committee of the Copper and Brass Research Association and the Manufacturers' Standardization Society of the Valve and Fittings Industry (MSS). That work, properly reviewed and approved, was published as ASA B16.22-1951.

Concurrently, in June 1949, at the request of Subcommittee 9, a task group organized by MSS began work on a standard for cast brass solder joint drainage fittings. Representatives of all U.S. and Canadian manufacturers were invited to participate. The Report of the Coordinating Committee for a National Plumbing Code was taken into account; special research on wall thickness and depth of solder joint was conducted; coordination with other standards was sought, to avoid inconsistency. After working through nine drafts to reach consensus, the group submitted an April 1952 draft to Subcommittee 9. After committee, sponsor, and ASA approval, the standard was approved as ASA B16.23-1953, Cast Brass Solder Joint Drainage Fittings, on January 30, 1953.

Work soon began on a revision, to include additional sizes, reducing sizes, and additional types of fittings. A March 1955 draft was approved by B16, sponsors, and ASA, and published as ASA B16.23-1955. Starting in 1958, responding to requests for further revision and expansion, the MSS task group developed a 1959 draft which was approved by Subcommittee 9, the B16 Committee, sponsors, and ASA, and was published as ASA B16.23-1960.

In 1967 and 1968 a complete revision was undertaken, including engineering studies to verify that a user request for shorter soldering cups was justified. The resulting draft, after approval by Subcommittee 9, USA Standards Committee B16, sponsors, and the (then called) USA Standards Institute, was published as USAS B16.23-1969. An addenda, dated 1973, lengthened the cups on the three smallest sizes to overcome assembly problems.

The subcommittee, now Subcommittee I, began a new revision in 1974, resulting in the inclusion of the 1973 addenda, addition of metric equivalents, and change of "bronze" to "copper alloy." The draft finally approved by the (again renamed) American National Standards Institute (ANSI) was published as ANSI B16.23-1976.

In 1982, a new edition updating dimensional tables and metric equivalents, was developed. Following approval at all levels, the revision was published as ANSI B16.23-1984.

Also in 1982, American National Standards Committee B16 became the ASME B16 Standards Committee, operating with the same scope, under ASME procedures accredited

Copyright ASME International
Provided by IHS under license with ASME
No reproduction or networking permitted without license from IHS
Not for Resale

by ANSI. Subsequently, Subcommittee I merged with Subcommittee J, which had a related scope.

The 1992 edition removed metric units, establishing U.S. Customary units as the standard. Clarifications and updating changes were made in order to improve the text. This 2002 edition of B16.23 adds SI units of measure in the main body of text and moves U.S. Customary units to Mandatory Appendix I. A Nonmandatory Appendix for Quality System Problems is added, plus editorial revisions are made to improve the text. Following approval by the Standards Committee and ASME, approval as an American National Standard was given on February 6, 2002, with the designation ASME B16.23-2002.

Requests for interpretations and suggestions for revision should be sent to the Secretary, B16 Committee, The American Society of Mechanical Engineers, Three Park Avenue, New York, NY 10016-5990.

Copyright ASME International
Provided by IHS under license with ASME
No reproduction or networking permitted without license from IHS
Not for Resale

ASME B16 COMMITTEE
Standardization of Valves, Flanges, Fittings, Gaskets, and Valve Actuators

(The following is the roster of the Committee at the time of approval of this Standard.)

OFFICERS

W. N. McLean, *Chair*
R. A. Schmidt, *Vice Chair*
P. A. Reddington, *Secretary*

COMMITTEE PERSONNEL

R. W. Barnes, Anric Enterprises
R. R. Brodin, Fisher Controls International, Inc.
M. A. Clark, Nibco, Inc.
A. Cohen, Arthur Cohen and Associates
C. E. Floren, Mueller Co.
D. R. Frikken, Solutia, Inc.
G. A. Jolly, Vogt Valve Co.
W. G. Knecht, BW/IP International, Inc.
R. Koester, The William Powell Co.
W. N. McLean, Newco Valves
M. L. Nayyar, Bechtel Power Corp.
P. A. Reddington, The American Society of Mechanical Engineers
R. A. Schmidt, Trinity-Ladish Co.
H. R. Sonderegger, Grinnell Corp.
W. M. Stephan, Flexitallic, Inc.
T. F. Stroud, Ductile Iron Pipe Research Association
R. E. White, Richard E. White and Associates
D. A. Williams, Southern Company Services
L. A. Willis, The Dow Chemical Co.
W. R. Worley, Union Carbide Corp.

SUBCOMMITTEE J — COPPER AND COPPER ALLOY FLANGES, FLANGED FITTINGS, AND SOLDER JOINT FITTINGS

M. A. Clark, *Chair,* Nibco, Inc.
A. G. Kireta, Jr., *Vice Chair,* Copper Development Association, Inc.
G. E. Moino, *Secretary,* The American Society of Mechanical Engineers
D. F. Buccicone, Elkhart Products Corp.
A. Cohen, Arthur Cohen and Associates
D. R. Frikken, Solutia, Inc.
A. A. Knapp, Canadian Copper/Brass Development Association
L. McDaniel, Mueller Copper Fittings, LP
T. L. Jamison, *Alternate,* Mueller Industries

Copyright ASME International
Provided by IHS under license with ASME
No reproduction or networking permitted without license from IHS
Not for Resale

CORRESPONDENCE WITH THE B16 COMMITTEE

General. ASME standards are developed and maintained with the intent to represent the consensus of concerned interests. As such, users of this Standard may interact with the Committee by requesting interpretations, proposing revisions, and attending Committee meetings. Correspondence should be addressed to:

Secretary, B16 Main Committee
The American Society of Mechanical Engineers
Three Park Avenue
New York, NY 10016-5990

Proposing Revisions. Revisions are made periodically to the Standard to incorporate changes that appear necessary or desirable, as demonstrated by the experience gained from the application of the Standard. Approved revisions will be published periodically.

The Committee welcomes proposals for revisions to this Standard. Such proposals should be as specific as possible, citing the paragraph number(s), the proposed wording, and a detailed description of the reasons for the proposal, including any pertinent documentation.

Interpretations. Upon request, the B16 Committee will render an interpretation of any requirement of the Standard. Interpretations can only be rendered in response to a written request sent to the Secretary of the B16 Main Committee.

The request for interpretation should be clear and unambiguous. It is further recommended that the inquirer submit his/her request in the following format:

Subject:	Cite the applicable paragraph number(s) and the topic of the inquiry.
Edition:	Cite the applicable edition of the Standard for which the interpretation is being requested.
Question:	Phrase the question as a request for an interpretation of a specific requirement suitable for general understanding and use, not as a request for an approval of a proprietary design or situation. The inquirer may also include any plans or drawings, which are necessary to explain the question; however, they should not contain proprietary names or information.

Requests that are not in this format will be rewritten in this format by the Committee prior to being answered, which may inadvertently change the intent of the original request.

ASME procedures provide for reconsideration of any interpretation when or if additional information that might affect an interpretation is available. Further, persons aggrieved by an interpretation may appeal to the cognizant ASME Committee or Subcommittee. ASME does not "approve," "certify," "rate," or "endorse" any item, construction, proprietary device, or activity.

Attending Committee Meetings. The B16 Main Committee regularly holds meetings, which are open to the public. Persons wishing to attend any meeting should contact the Secretary of the B16 Main Committee.

Copyright ASME International
Provided by IHS under license with ASME
No reproduction or networking permitted without license from IHS
Not for Resale

CAST COPPER ALLOY SOLDER JOINT DRAINAGE FITTINGS: DWV

1 SCOPE

1.1 General

This Standard establishes specifications for cast copper alloy solder joint drainage fittings, designed for use in drain, waste, and vent (DWV) systems. These fittings are designed for use with seamless copper tube conforming to ASTM B 306, Copper Drainage Tube (DWV), as well as fittings intended to be assembled with soldering materials conforming to ASTM B 32, or tapered pipe thread conforming to ASME B1.20.1.

This standard is allied with ASME B16.29, Wrought Copper and Wrought Copper Alloy Solder Joint Drainage Fittings — DWV.

It provides requirements for fitting ends suitable for soldering. This standard covers:

(a) description;

(b) pitch (slope);

(c) abbreviations for end connections;

(d) sizes and methods for designing openings for reducing fittings;

(e) marking;

(f) material; and

(g) dimensions and tolerances.

1.2 Convention

For the purpose of determining conformance with this Standard, the convention for fixing significant digits where limits and maximum or minimum values are specified shall be "rounding off" as defined in ASTM E 29. This requires that an observed or calculated value shall be rounded off to the nearest unit in the last right-hand digit used for expressing the limit.

1.3 Units of Measure

The values stated in either SI (metric) or U.S. Customary (inch-lb.) units of measure shall be regarded separately as standard. Within the main text, SI units are given. For convenience, the customary units are shown in Mandatory Appendix I. The values stated in each system are not exact equivalents; therefore, each system shall be used independently of the other.

NOTE: Combining values from the two systems may result in nonconformance with the Standard.

1.4 References

Standards and specifications adopted by reference in this Standard are shown in Mandatory Appendix II, which is part of this Standard. It is not considered practical to identify the specific edition of each standard and specification in the individual references. Instead, the specific edition reference is identified in Mandatory Appendix II.

1.5 Quality Systems

Requirements relating to the product manufacturer's Quality System Programs are described in Nonmandatory Appendix A.

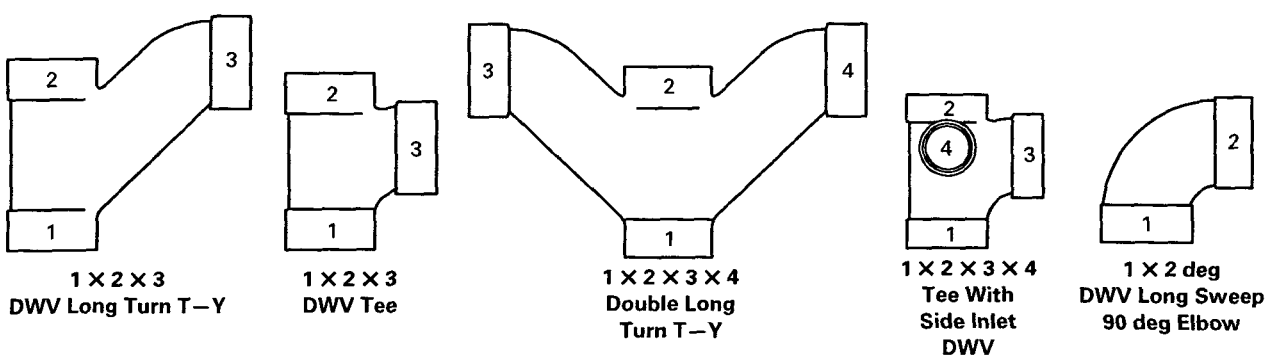

FIG. 1 SIZE SEQUENCE OF FITTINGS

Copyright ASME International
Provided by IHS under license with ASME
No reproduction or networking permitted without license from IHS
Not for Resale

2 DESCRIPTION

(a) These fittings are designed for drainage and vent systems using the solder joint method of connection. The fitting cups (*C*) are provided with stops so that the ends of the tube, when assembled, meet the stops, thereby forming essentially smooth passageways.

(b) The sketches and designs of fittings are illustrative only. The dimensions specified herein shall govern in all cases.

3 PITCH (SLOPE)

All nominal 90 deg fittings shall be pitched to result in a slope of 21 mm/m (0.25 in/ft.) (2.1%) of length of horizontal tube with reference to a horizontal plane (see Fig. 2).

4 ABBREVIATIONS

The following symbols are used to designate the type of fitting end:

C = solder-joint fitting end made to receive copper tube diameter (female)
FTG = solder-joint fitting end made to copper tube diameter (male)
F = internal ANSI Standard taper pipe thread (female) NPT
M = external ANSI Standard taper pipe thread (male) NPT
SJ = end of fitting made to receive O.D. tube size
NPSM = Standard straight mechanical pipe thread

5 SIZE

(a) The size of the fittings scheduled in the following tables corresponds to the drainage tube size shown in ASTM B 306. The size of the threaded ends (except slip joints) corresponds to the nominal pipe size.

(b) Fittings are designated by the size of the openings in the sequence illustrated in Fig. 1.

6 MARKING

(a) Each fitting shall be marked permanently and legibly with the manufacturer's name or trade mark and with DWV (to indicate Drain Waste Vent).

(b) Vent fittings shall be permanently marked "VENT ONLY" (See Tables 43, 44, I43, and I44) and show the manufacturer's name or trademark in accordance with MSS SP-25.

7 MATERIAL

Castings shall be copper alloy produced to meet:

(a) the requirements of ASTM B 62 Alloy C83600; or

(b) the chemical and tensile requirements of ASTM B 584 Alloy 83800 or 84400;

and in all other respects comply with the requirements of ASTM B 62.

8 METAL THICKNESS

Dimensional variations will occur in the casting process. Pattern equipment shall be designed to produce the metal thickness given for fittings in Table 2 or Table I2.

Any final fitting metal wall thickness less than 90% of the thickness given in the table is unacceptable.

9 INSPECTION TOLERANCE

9.1 Linear Dimensions

Tables 4 through 56 and Tables I4 through I56 contain the nominal laying length dimensions for DWV fittings covered by this Standard. An inspection tolerance, as shown in Table 1, shall be allowed on center-to-shoulder, center-to-threaded end, and shoulder-to-threaded end dimensions on all fittings having internal solder (cup) ends; and on center-to-solder end, solder end-to-shoulder, and solder end-to-threaded dimensions on all fittings having external solder (fitting) ends. The largest opening in the fitting governs the tolerance to be applied to all openings.

The inspection tolerance for laying length dimensions *A*, *B*, and *C* (see Fig. 2 and Table 4 or Table I4) shall be double those shown above, except the minus tolerance applied to couplings, dimension *A* shall not result in a dimension less than 2.3 mm (0.09 in).

9.2 Ovality

Maximum ovality shall not exceed 1% of the maximum diameters shown in Table 2 or Table I2. The average of the maximum and minimum diameters shall be within the dimensions shown in the table.

9.3 Alignment

The maximum allowable variations in the regular alignment of all openings shall be 5 mm per 1 m (0.06 in per 1 ft.) (0.5%) other than in the direction of pitch.

Copyright ASME International
Provided by IHS under license with ASME
No reproduction or networking permitted without license from IHS
Not for Resale

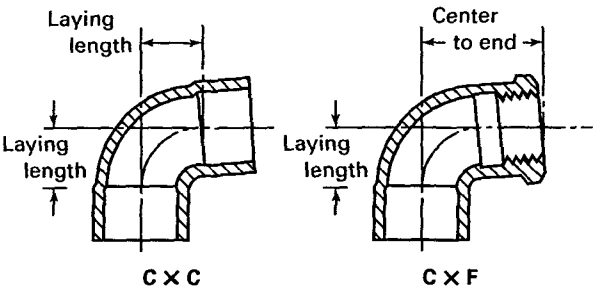

FIG. 2 TYPICAL LAYING LENGTHS OF DWV 90 deg ELBOWS

TABLE 1 INSPECTION TOLERANCE TABLE

Nominal Size	mm ±
1¼, 1½, and 2	2.0
3	2.8
4 and 5	3.2
6 and 8	4.0

9.4 Gauging of Solder Joint Ends

(a) Standard Gauging Method of Solder Joint Ends. The standard method of gauging the diameter tolerances for male and female ends shall be by the use of plain plug and ring gauges designed to hold the product within the limits established in Table 2 or Table I2.

(b) Optional Gauging Method of Solder Joint Ends. For gauging the diameter tolerance of male and female ends, the manufacturer may use direct reading instruments instead of ring and plug gauges as specified in para. 9.4(a). When gauging the diameters of male and female ends, using direct reading instruments, refer to para. 9.2.

10 THREADED ENDS

10.1 General

Threaded ends shall conform to the dimensional requirements contained within Table 3 or Table I3. Fitting threads shall be right hand, conforming to ASME B1.20.1. They shall be taper threads (NPT) except for slip joint ends, which shall have straight pipe threads (NPSM).

10.2 Thread Dimensions

All internal threads shall be countersunk a distance not less than one-half the pitch of the thread at anangle of approximately 45 deg with the axis of the thread. All external threads shall be chamfered at an angle of 30 to 45 deg from the axis. This facilitates joint assembly and thread protection. Countersinking and chamfering shall be concentric to the threads. The length of threads specified in all tables shall be measured to include the countersink or chamfer.

10.3 Threading Tolerances

Tapered pipe threads (NPT) shall be checked by use of working plug or ring gauges either standard or limit types. Gauges shall be threaded hand tight. The reference point for gauging internal taper threads, the plug gauge shall be screwed handtight into the fitting. Internal product threads depends upon the chamfer diameter. When the internal chamfer diameter exceeds the major diameter of the internal thread, the reference point shall be the last thread scratch on the chamfer cone. Otherwise, when the internal chamfer diameter does not exceed the major diameter of the internal thread, the reference point shall be the end of the fitting. On the external thread it shall be flush with the end of the fitting.

Tolerance for an internal threaded end having an internal shoulder shall be from one turn large to one turn small. Tolerance for an internal threaded end without shoulder and for an external threaded end shall be from one-half turn small to one and one-half turn large.

Straight pipe threads (NPSM) shall be checked by use of the standard GO and NO GO plug and ring gauges.

11 CONFIGURATION OF THREADED ENDS

At the manufacturer's option, female ends of fittings may be furnished with a polygon or bead with or without ribs, and male ends of fittings may be furnished with a polygon, ribs, or flats.

Copyright ASME International
Provided by IHS under license with ASME
No reproduction or networking permitted without license from IHS
Not for Resale

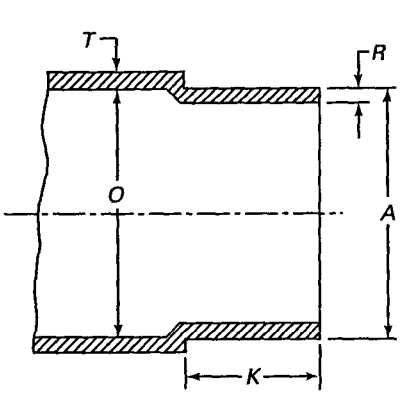

Male End
(FTG)
(a)

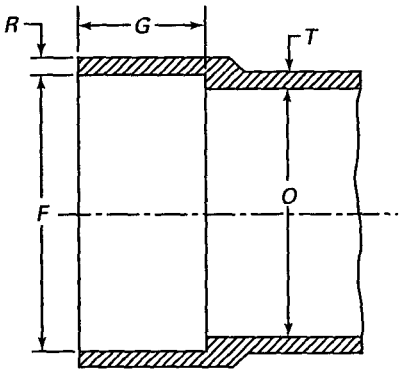

Female End
(C)
(b)

TABLE 2 DIMENSIONS OF SOLDER JOINT ENDS — DWV

Nominal Size [Note (1)]	Male End			Female End			Metal Thickness [Note (4)]		Inside Diameter of Fitting, *O*
	Outside Diameter, *A* [Note (2)]		Length, *K* [Note (3)]	Inside Diameter, *F* [Note (2)]		Depth, *G*	Body, *T*	Joint, *R*	
	Min.	Max.	Min.	Min.	Max.	Min.			Min.
1¼	34.85	34.98	14.2	35.00	35.10	12.7	2.5	1.8	32.8
1½	41.17	41.33	15.7	41.35	41.48	14.2	2.5	2.0	38.9
2	53.87	54.03	17.5	54.05	54.18	15.7	2.5	2.3	51.1
3	79.27	79.43	20.6	79.45	79.58	19.1	3.0	2.5	75.7
4	104.67	104.83	26.9	104.85	104.98	25.4	3.0	3.0	99.8
5	130.07	130.23	33.3	130.25	130.38	31.8	4.8	4.8	124.7
6	155.47	155.63	41.1	155.65	155.78	38.1	4.8	4.8	149.4
8	206.22	206.43	53.8	206.45	206.58	50.8	5.6	5.6	197.6

GENERAL NOTES:
(a) Primary dimensions are in millimeters.
(b) The sketches and designs of fittings are illustrative only. The dimensions herein shall govern in all cases.

NOTES:
(1) For size designation of fitting, see Section 5.
(2) For ovality, see para. 9.2.
(3) *K* dimensions of 11.2 mm, 12.7 mm, and 142 mm and *G* dimensions of 9.7 mm, 11.2 mm, and 12.7 mm, respectively for 1¼, 1½, and 2 in. sizes are sound and acceptable from an engineering standpoint. However, the cup depths specified in Table 2 are to provide greater facility in making installations.
(4) For metal thickness tolerance, see Section 8.

Copyright ASME International
Provided by IHS under license with ASME
No reproduction or networking permitted without license from IHS
Not for Resale

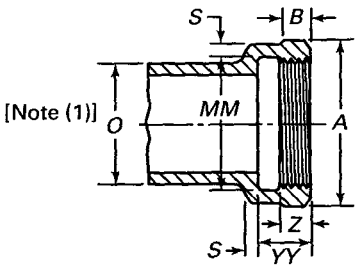

Female Threaded End
(F)

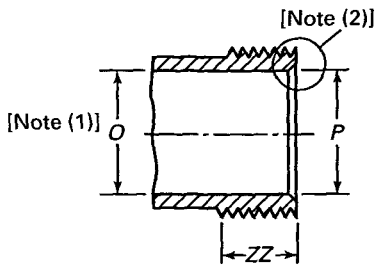

Male Threaded End
(M)

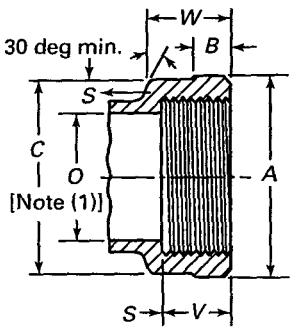

Female Threaded End
(F)

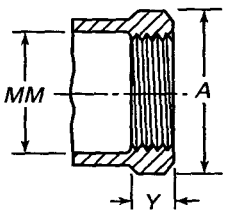

Male Threaded End
(M)

TABLE 3 DIMENSIONS OF THREADED ENDS — DWV

Nominal Thread Size, [Note (3)]	Dia. of Band or Across Flats of Polygon, Min., *A*	Band Length, Min., *B*	Dia. of Body Over Thread, Min., *C*	Dia. of Recess Min., *MM* [Note (4)]	Depth of Full Thread, Min., *V*	Min., *W*	Length of Thread, Min., *Y*	End To Shoulder, Min., *YY* [Note (4)]	Thread End Wall, Min., *S* [Note (5)]	Thread End Bore, Min., *P* [Note (4)]	Length of Effective Thread, Min., *ZZ*
1¼	48.5	7.9	48.3	42.2	18.0	25.4	10.7	17.8	3.05	33.27	18.034
1½	55.1	8.6	55.1	48.5	18.3	25.4	10.7	18.3	3.30	39.37	18.3
2	68.3	10.4	68.1	60.5	19.3	26.2	11.2	19.1	3.81	51.56	19.3
3	98.6	14.0	98.6	88.9	30.5	37.1	19.6	30.5	4.83	77.47	30.5
4	125.5	16.8	125.5	114.3	33.0	38.9	21.3	33.0	5.59	102.87	33.0
5	155.4	19.8	155.4	141.2	35.8	42.2	23.9	35.8	7.11	126.49	35.8
6	185.4	22.4	185.4	168.1	38.4	42.7	24.4	38.1	8.64	153.16	38.4
8	238.3	28.4	238.0	218.9	43.4	44.5	26.9	43.2	9.53	201.93	43.4

GENERAL NOTES:
(a) Dimensions are in millimeters.
(b) For threads of threaded ends, see Section 10.

NOTES:
(1) For inside diameter of fitting, see Table 2.
(2) 1¼, 1½ and 2 male threaded ends may have inside chamfer for slip nut connections.
(3) Thread size is American National Standard Pipe Threads, General Purpose (in.), ASME B1.20.1.
(4) Dimensions computed using formula $E_1 - h - 2T$.
E_1 = thread pitch diameter from ASME B1.20.1
h = height of thread from ASME B1.20.1
T = metal thickness from Table 2.
(5) For initial thickness tolerance, see Section 8.

Copyright ASME International
Provided by IHS under license with ASME
No reproduction or networking permitted without license from IHS
Not for Resale

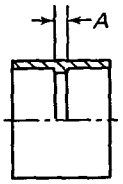

DWV Coupling
C × C

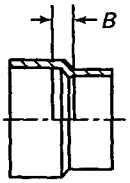

DWV Reducer
C × C

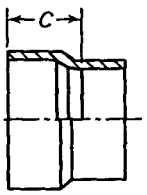

DWV Extended
Bushing
FTG × C

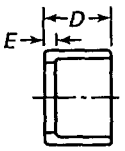

DWV Flush Bushing
FTG × C

TABLE 4 DIMENSIONS FOR DWV COUPLINGS, REDUCERS, EXTENDED BUSHINGS, AND FLUSH BUSHINGS

Nominal Size	Coupling, *A*	Reducer, *B*	Extended Bushing, *C*	Flush Bushing	
				D	*E*
1¼	3.0	...	...	...	...
1½	3.0	...	...	...	...
1½ × 1¼	...	6.4	19.1	15.7	3.0
2	3.0	...	...	...	...
2 × 1½	...	9.7	23.1	17.5	3.3
2 × 1¼	...	11.2	23.9	17.5	4.8
3	4.8	...	...	...	...
3 × 2	...	19.1	35.1	20.6	4.8
3 × 1½	...	23.9	33.3	20.6	6.4
3 × 1¼	...	23.9	33.3	...	...
4	4.8	...	...	...	...
4 × 3	...	8.6	41.1	26.9	7.9
4 × 2	...	12.7	44.5	...	...
4 × 1½	...	38.1	...	...	...
5	6.4	...	...	...	...
5 × 4	...	14.2	39.6	...	...
5 × 3	...	22.4	47.8	...	...
6	6.4	...	...	...	...
6 × 5	...	13.5	74.7	...	...
8	9.7	...	...	...	...
8 × 6	...	35.1	...	...	...

GENERAL NOTE: Dimensions are in millimeters.

Copyright ASME International
Provided by IHS under license with ASME
No reproduction or networking permitted without license from IHS
Not for Resale

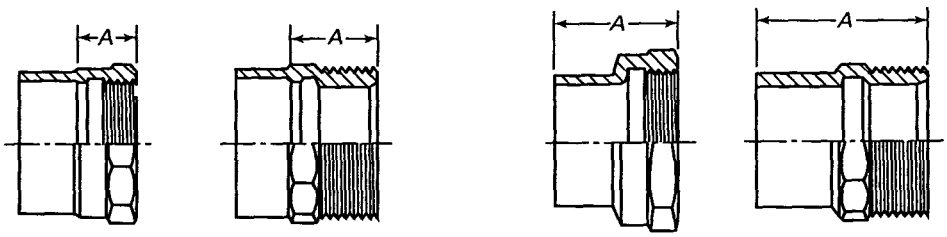

DWV Adapters

TABLE 5 DIMENSIONS OF DWV ADAPTERS

Nominal Size	C × F, *A*	C × M, *A*	FTG × F, *A*	FTG × M, *A*
1¼	20.6	23.9	37.3	49.3
1¼ × 2	23.9	33.3	...	...
1¼ × 1½	20.6	28.4	...	...
1½	20.6	23.9	38.9	52.3
1½ × 2	22.4	31.8	...	...
1½ × 1¼	20.6	26.9	...	...
2	22.4	23.9	41.4	60.5
2 × 3	47.8	...	...	...
2 × 1½	22.4	26.9	...	...
2 × 1¼	22.4	26.9	...	...
3	38.1	39.6	60.5	76.2
3 × 4	57.2	...	...	...
3 × 2	39.6	36.6	...	...
4	42.2	41.1	71.4	91.9
4 × 3	42.9	...	...	...
5	49.3	44.5	...	...
6	55.6	50.8	96.8	...
8	66.5	85.9	111.3	...

GENERAL NOTE: Dimensions are in millimeters.

Copyright ASME International
Provided by IHS under license with ASME
No reproduction or networking permitted without license from IHS
Not for Resale

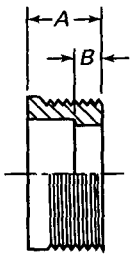

C × M
DWV Short Adapters

TABLE 6 DIMENSIONS OF DWV SHORT ADAPTERS

	C × M	
Nominal Size	*A*	*B*
1¼	25.4	12.7
1½	25.4	11.2
1¼ × 1½	25.4	12.7
2	28.4	12.7
1½ × 2	30.2	15.7

GENERAL NOTE: Dimensions are in millimeters.

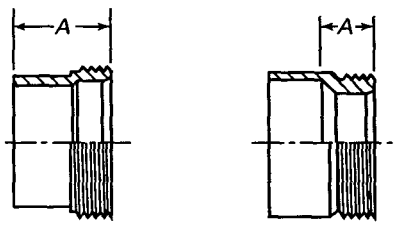

FTG × SJ C × SJ
DWV Trap Adapters

TABLE 7 DIMENSIONS OF DWV TRAP ADAPTERS

Nominal Size	FTG × SJ, *A*	C × SJ, *A*
1¼	30.2	15.7
1½	31.8	17.5
1½ × 1¼	...	17.5
2	...	17.5
2 × 1½	...	17.5

GENERAL NOTES:
(a) Primary dimensions are in millimeters.
(b) For dimensions of slip joint ends, see Table 49.

Copyright ASME International
Provided by IHS under license with ASME
No reproduction or networking permitted without license from IHS
Not for Resale

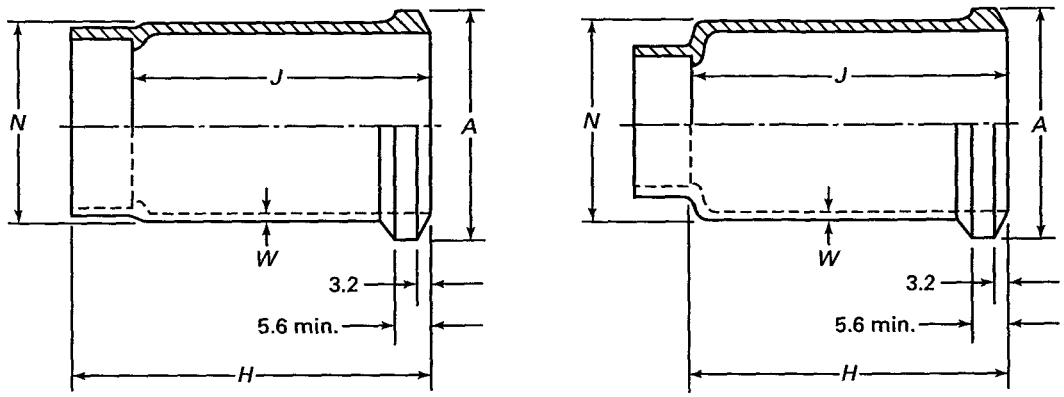

Straight Sizes Reducing Sizes

DWV Soil Pipe Adapter — C × Spigot

TABLE 8 DIMENSIONS OF C TO SOIL PIPE ADAPTER FOR JOINING TO EXTRA HEAVY SOIL PIPE

Size Soil Pipe, C × Spigot [Note (1)]	Diameter of Bead, *A*		Body Wall, *W*	Body Outside Diameter, [Note (2)] *N* ±2.286 mm	Body Length, [Note (3)] *H* ±1.524 mm	Laying Length, *J*
	Min.	Max.				
2 × 2	69.9	68.3	2.5	60.5	63.5	63.5
1 × 2	69.9	68.3	2.5	60.5	82.6	58.7
1½ × 2	69.9	68.3	2.5	60.5	82.6	58.7
1¼ × 2	69.9	68.3	2.5	60.5	82.6	84.1
3 × 3	98.6	96.8	3.0	88.9	69.9	69.9
2 × 3	98.6	96.8	3.0	88.9	88.9	90.4
1½ × 3	98.6	96.8	3.0	88.9	88.9	90.4
4 × 4	124.0	122.2	3.0	114.3	76.2	76.2
3 × 4	124.0	122.2	3.0	114.3	95.3	96.8
2 × 4	124.0	122.2	3.0	114.3	95.3	98.6
1½ × 4	124.0	122.2	3.0	114.3	95.3	98.6
5 × 5	149.4	147.6	4.8	139.7	76.2	76.2
6 × 6	174.8	173.0	5.6	165.1	76.2	76.2

GENERAL NOTE: Dimensions are taken in millimeters.

NOTES:

(1) Dimensions given are for extra heavy weight soil pipe. Refer to ASTM A 74. For service weight, *A* and *N* may be reduced as shown in Table 2 of ASTM A 74. Service weight adapters should be marked "SW" or "SERVICE WEIGHT."

(2) *N* is given from outside diameter of XH soil pipe.

(3) *H* body lengths are based on "telescoping lengths of XH soil pipe hubs."

Copyright ASME International
Provided by IHS under license with ASME
No reproduction or networking permitted without license from IHS
Not for Resale

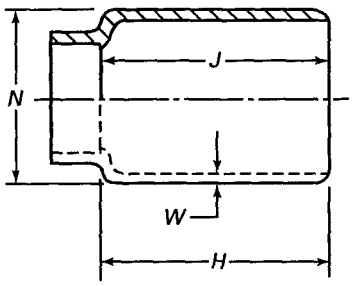

C × Soil Pipe
DWV Soil Pipe Adapters — Plain End
[Note (1)]

TABLE 9 DIMENSIONS OF C TO SOIL PIPE ADAPTER — PLAIN END FOR JOINING TO EXTRA HEAVY SOIL PIPE

Nominal Size	Body Length, *H* ±1.524 mm	Body Outside Diameter, *N* ±2.286 mm	Body Wall, *W*	Laying Length, *J*
2 × 2	63.5	60.5	2.5	63.5
1¼ × 2	63.5	60.5	2.5	65.0
1½ × 2	63.5	60.5	2.5	65.0
3 × 3	69.9	88.9	3.0	69.9
2 × 3	69.9	88.9	3.0	71.4
3 × 4	76.2	114.3	3.0	77.7

GENERAL NOTE: Dimensions are in millimeters.
NOTE:
(1) For use with elastomer gasket.

Copyright ASME International
Provided by IHS under license with ASME
No reproduction or networking permitted without license from IHS
Not for Resale

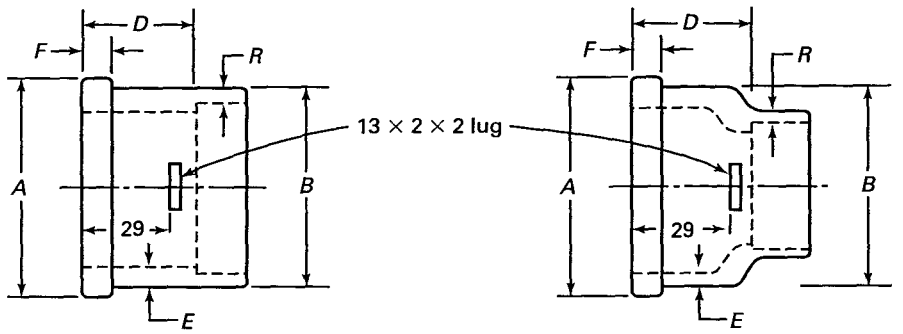

Straight Sizes Reducing Sizes

DWV Soil Pipe Adapter — C × No-Hub
[Note (1)]

TABLE 10 DIMENSIONS OF C × NO-HUB SOIL PIPE ADAPTER

Nominal Size C × No-Hub	Diameter of Bead, *A* ±1.524 mm	Outside Diameter of Body, *B* ±1.524 mm	Laying Length, *D*	Metal Thickness [Note 2]		Width Bead, Min. *F* +3.302 mm −0.0 mm
				Body, *E*	Joint, *R*	
2	60.5	58.7	31.0	2.54	2.29	6.4
1½ × 2	60.5	58.7	31.8	2.54	1.98	6.4
1¼ × 2	60.5	58.7	32.5	2.54	1.83	6.4
3	86.6	84.8	31.0	3.05	2.62	6.4
2 × 3	86.6	84.8	31.8	3.05	2.29	6.4
1½ × 3	86.6	84.8	32.5	3.05	1.98	6.4
4	112.8	111.3	31.0	3.05	3.05	7.9
3 × 4	112.8	111.3	31.8	3.05	2.62	7.9

GENERAL NOTE: Dimensions are in millimeters.

NOTES:
(1) For use with stainless steel clamp and elastomer gasket.
(2) For metal thickness tolerance, see Section 8.

Copyright ASME International
Provided by IHS under license with ASME
No reproduction or networking permitted without license from IHS
Not for Resale

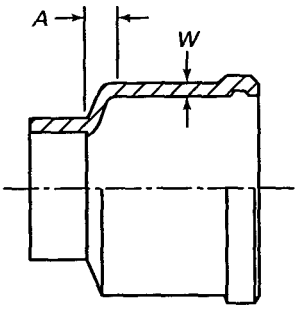

DWV Soil Pipe Adapter
C × Hub

TABLE 11 DIMENSIONS OF C × HUB SOIL PIPE ADAPTER

Nominal Size	A	W
3	9.7	3.0
3 × 4	11.2	3.0
4	4.8	3.0

GENERAL NOTES:
(a) Dimensions are in millimeters.
(b) For hub dimensions, see ASTM A 74.

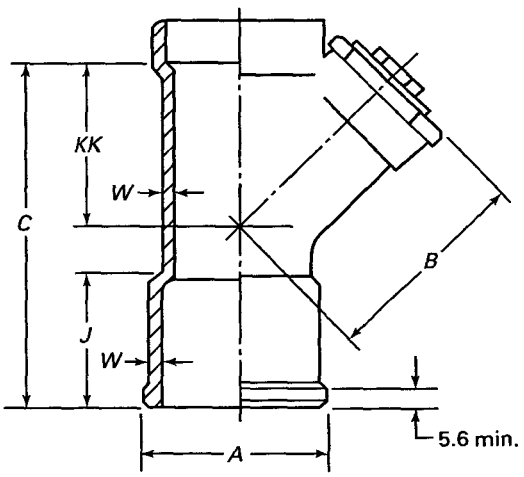

DWV 45 deg Y With Cleanout

TABLE 12 DIMENSIONS OF DWV 45 deg Y WITH CLEANOUT — SOIL PIPE (SPIGOT) × C × CLEANOUT

Nominal Size	A		Max., B	C	J	KK	W
	Max.	Min.					
4 × 3 × 3	122.7	122.2	130.0	215.9	76.2	104.6	3.0

GENERAL NOTE: *Dimensions are in millimeters.*

Copyright ASME International
Provided by IHS under license with ASME
No reproduction or networking permitted without license from IHS
Not for Resale

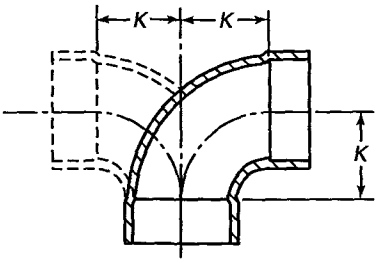

DWV 90 deg Elbow
C × C and C × C × C

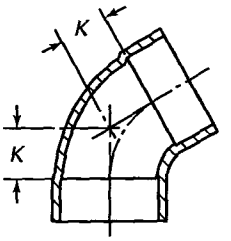

DWV 60 deg Elbow
C × C

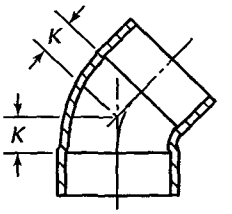

DWV 45 deg Elbow
C × C

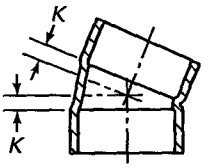

DWV $22\frac{1}{2}$ deg Elbow
C × C

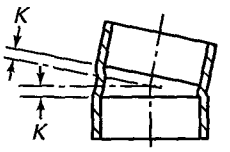

DWV $11\frac{1}{4}$ deg Elbow
C × C

TABLE 13 DIMENSIONS OF DWV ELBOWS AND DOUBLE ELBOWS — C × C

Angle	Dimension	Nominal Size							
		$1\frac{1}{4}$	$1\frac{1}{2}$	2	3	4	5	6	8
DWV 90 deg elbow, C × C	*K*	30.2	36.6	49.3	74.7	98.6	124.0	147.6	198.4
DWV 60 deg elbow, C × C	*K*	17.5	20.6	28.4	42.9	57.2	73.2	88.9	117.3
DWV 45 deg elbow, C × C	*K*	12.7	14.2	20.6	30.2	41.1	52.3	63.5	84.1
DWV $22\frac{1}{2}$ deg elbow, C × C	*K*	4.8	6.4	9.7	14.2	19.1	23.9	28.4	38.1
DWV $11\frac{1}{4}$ deg elbow, C × C	*K*	3.0	3.0	4.8	6.4	7.9	10.4	12.7	16.8

GENERAL NOTE: Dimensions are in millimeters.

Copyright ASME International
Provided by IHS under license with ASME
No reproduction or networking permitted without license from IHS
Not for Resale

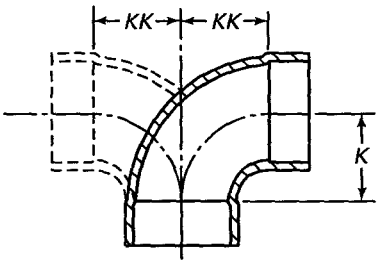

DWV 90 deg Elbow, C × C
DWV Double Elbow, C × C × C

TABLE 14 DIMENSIONS OF REDUCING DWV SINGLE AND DOUBLE ELBOWS — C × C

		Nominal Size C × C or C × C × C			
Angle	**Dimension**	**1½ × 1¼**	**2 × 1½**	**2 × ¼**	**4 × 3**
DWV 90 deg reducing elbow, C × C	*K*	30.2	36.6	30.2	71.4
	KK	33.3	42.9	39.6	76.2

GENERAL NOTE: Dimensions are in millimeters.

Copyright ASME International
Provided by IHS under license with ASME
No reproduction or networking permitted without license from IHS
Not for Resale

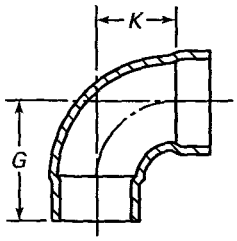

DWV 90 deg Elbow
FTG × C

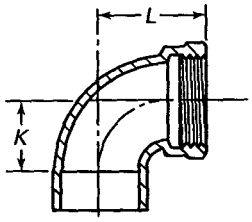

DWV 90 deg Elbow
C × F

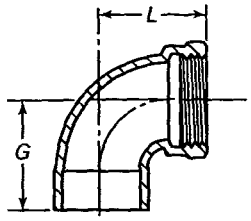

DWV 90 deg Elbow
FTG × F

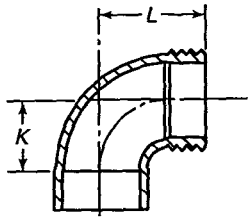

DWV 90 deg Elbow
C × M

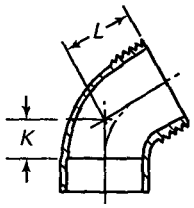

DWV 60 deg Elbow
C × M

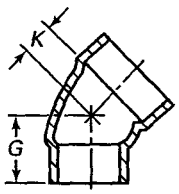

DWV 45 deg Elbow
FTG × C

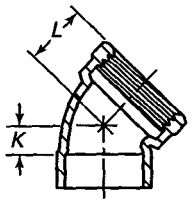

DWV 45 deg Elbow
C × F

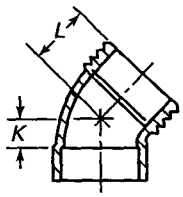

DWV 45 deg Elbow
C × M

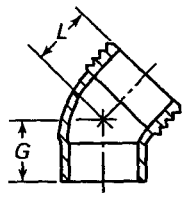

DWV 45 deg Elbow
FTG × M

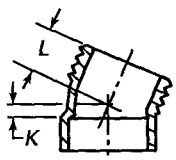

DWV $22^{1}/_{2}$ deg Elbow
C × M

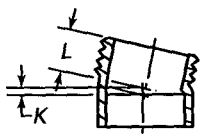

DWV $11^{1}/_{4}$ deg Elbow
C × M

TABLE 15 DIMENSIONS OF DWV ELBOWS

Angle	Dimensions	Nominal Size 1¼	1½	2	3	4
DWV 90 deg elbow, FTG × C	*K*	30.2	36.6	49.3	74.7	98.6
	G	44.5	53.8	68.3	95.3	124.0
DWV 90 deg elbow, C × F	*K*	30.2	36.6	49.3	74.7	98.6
	L	47.8	53.8	68.3	100.1	125.5
DWV 90 deg elbow, FTG × F	*G*	44.5	52.3	68.3	95.3	122.2
	L	47.8	53.8	68.3	100.1	127.0
DWV 90 deg elbow, C × M	*K*	30.2	36.6	49.3	74.7	98.6
	L	47.8	53.8	71.4	100.1	125.5
DWV 45 deg elbow, FTG × C	*K*	12.7	14.2	20.6	30.2	41.1
	G	25.9	30.2	38.1	50.8	68.3

GENERAL NOTES:
(a) Dimensions are in millimeters.
(b) See Table 16 for reducing sizes.
(c) See Table 17 for continuation of dimensions.

Copyright ASME International
Provided by IHS under license with ASME
No reproduction or networking permitted without license from IHS
Not for Resale

TABLE 16 DIMENSIONS OF DWV REDUCING ELBOWS

Nominal Size	DWV 90 deg Elbow, C × F		DWV 90 deg Elbow, C × M	
	K	*L*	*K*	*L*
1½ × 1¼	33.3	50.8	33.3	47.8

GENERAL NOTES:
(a) Dimensions are in millimeters.
(b) Refer to illustrations for Table 15.

TABLE 17 DIMENSIONS OF DWV ELBOWS

Angle	Dimensions	Nominal Size		
		1¼	1½	2
DWV 60 deg elbow, C × M	*K*	16.8	20.6	27.7
	L	32.5	38.1	46.7
DWV 45 deg elbow, C × F	*K*	7.6	9.1	19.1
	L	32.5	35.1	42.2
DWV 45 deg elbow, C × M	*K*	12.7	14.2	19.1
	L	30.2	33.3	33.8
DWV 45 deg elbow, FTG × M	*L*	26.9	31.8	33.8
	G	26.2	30.2	33.0
DWV 22½ deg elbow, C × M	*K*	4.8	6.4	8.6
	L	20.6	23.9	27.7
DWV 11¼ deg elbow, C × M	*K*	3.0	3.0	4.8
	L	19.1	20.5	23.9

GENERAL NOTES:
(a) Dimensions are in millimeters.
(b) Refer to illustrations for Table 15.

Copyright ASME International
Provided by IHS under license with ASME
No reproduction or networking permitted without license from IHS
Not for Resale

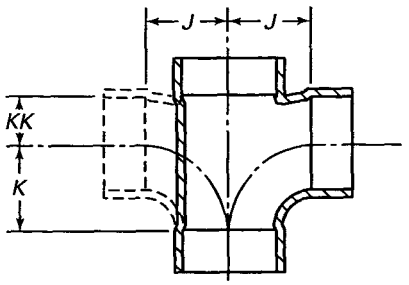

DWV Tees
C × C × C
C × C × C × C

TABLE 18 DIMENSIONS OF DWV TEES AND DOUBLE TEES

Nominal Size	*J*	*K*	*KK*
1¼	30.2	30.2	17.5
1½	36.6	36.6	20.6
1½ × 1½ × 1¼	33.3	30.2	17.5
1½ × 1¼ × 1½	36.6	36.6	20.6
1½ × 1¼ × 1¼	33.3	30.2	19.1
2	49.3	49.3	25.4
2 × 2 × 1½	42.9	36.6	20.6
2 × 2 × 1¼	39.6	30.2	17.5
2 × 1½ × 2	49.3	49.3	25.4
2 × 1½ × 1½	42.9	36.6	20.6
2 × 1½ × 1¼	42.9	36.6	19.1
3	74.7	74.7	38.1
3 × 3 × 2	62.0	49.3	25.4
3 × 3 × 1½	55.6	36.6	20.6
3 × 3 × 1¼	52.3	30.2	17.5
3 × 2 × 3	74.7	74.7	32.5
3 × 2 × 2	62.0	49.3	24.6
3 × 2 × 1½	71.4	36.6	21.3
3 × 1½ × 3	74.7	74.7	31.8
3 × 1½ × 1½	55.6	36.6	17.5
4	98.6	98.6	52.3
4 × 4 × 3	87.4	74.7	38.1
4 × 4 × 2	73.2	49.3	25.4
4 × 4 × 1½	66.5	36.6	20.6
4 × 4 × 1¼	63.5	30.2	17.5
4 × 2 × 4	98.6	98.6	31.8
5	124.0	124.0	58.7
5 × 5 × 4	111.3	98.6	49.3
6	147.6	147.6	69.9
6 × 6 × 4	124.0	98.6	49.3
6 × 4 × 4	122.2	98.6	38.1
8	198.4	198.4	87.4
8 × 8 × 6	169.9	147.6	68.3
8 × 6 × 6	171.5	147.6	58.7

GENERAL NOTE: Dimensions are in millimeters.

Copyright ASME International
Provided by IHS under license with ASME
No reproduction or networking permitted without license from IHS
Not for Resale

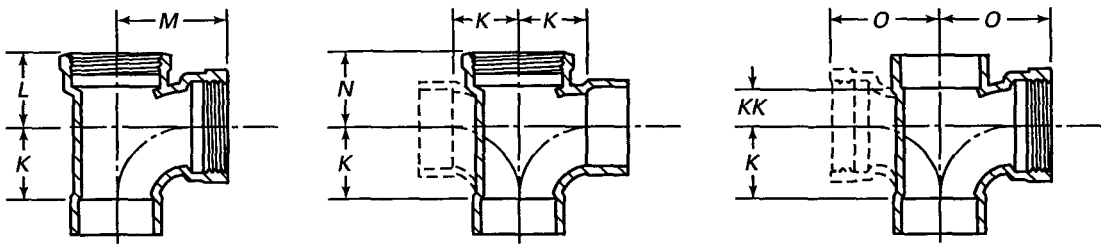

C × F × F

C × F × C
C × F × C × C

C × C × F
C × C × F × F

DWV Tees and Double Tees

TABLE 19 DIMENSIONS OF DWV TEES AND DOUBLE TEES

Nominal Size	*K*	*L*	*M*	*N*	*O*	*KK*
1¼	30.2	35.1	47.8	35.1	47.8	17.5
1½	36.6	39.6	55.6	38.1	53.8	20.6
1½ × 1½ × 1¼	30.2	39.6	55.6	...	50.8	17.5
1½ × 1¼ × 1½	36.6	39.6	55.6	...	53.8	20.6
2	49.3	44.5	68.3	44.5	68.3	25.4
2 × 2 × 1½	36.6	44.5	60.5	...	60.5	20.6
2 × 2 × 1¼	30.2	44.5	57.2	...	57.2	17.5
2 × 1½ × 1½	36.6	39.6	60.5	...	60.5	22.4
2 × 1½ × 2	49.3	...	...	44.5	...	...
3	74.7	68.3	100.1	63.5	100.1	38.1
3 × 3 × 2	49.3	...	...	...	81.0	25.4
3 × 3 × 1½	36.6	...	...	...	73.2	20.6
3 × 3 × 1¼	30.2	...	...	...	69.9	17.5
4	98.6	84.1	125.5	84.1	125.5	49.3
4 × 4 × 3	74.7	...	...	...	112.8	38.1
4 × 4 × 2	49.3	...	...	...	91.9	25.4
4 × 4 × 1½	36.6	...	...	...	84.1	20.6
4 × 4 × 1¼	30.2	...	...	...	81.0	17.5

GENERAL NOTE: Dimensions are in millimeters.

Copyright ASME International
Provided by IHS under license with ASME
No reproduction or networking permitted without license from IHS
Not for Resale

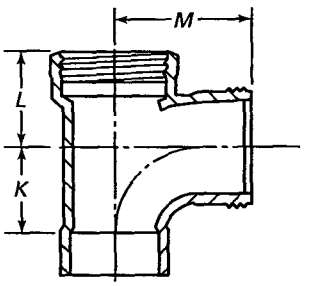

DWV Trap Tees
C × F × SJ

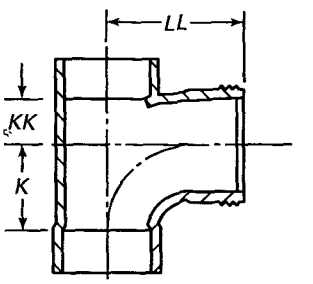

DWV Trap Tees
C × C × SJ

TABLE 20 DIMENSIONS OF DWV TRAP TEES

Nominal Size	K	L	M	KK	LL
1¼	30.2	35.1	50.8	19.1	49.3
1½	36.6	39.6	58.7	20.6	57.2
1½ × 1½ × 1¼	30.2	39.6	55.6	19.1	53.8
2	49.3	44.5	70.6	28.4	66.5

GENERAL NOTES:
(a) Dimensions are in millimeters.
(b) For dimensions of slip joint ends, see Table 49.

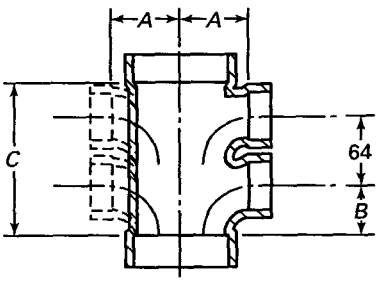

C × C × C × C
C × C × C × C × C × C
DWV Branch Fittings

TABLE 21 DIMENSIONS OF DWV DOUBLE AND QUADRUPLE BRANCH FITTINGS

Nominal Size	A	B	C
3 × 3 with 1½ in. inlets	55.6	39.6	125.5
3 × 3 with 1¼ in. inlets	52.3	39.6	125.5
4 × 4 with 1½ in. inlets	66.5	36.6	112.8
4 × 4 with 1¼ in. inlets	63.5	36.6	112.8

GENERAL NOTE: Dimensions are in millimeters.

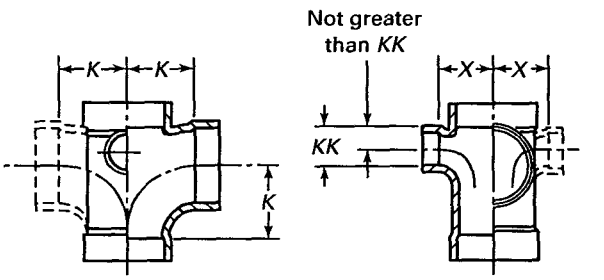

C × C × C With One or Two C Side Inlet(s)
C × C × C × C With One or Two C Side Inlet(s)
MWV Tees — Short Design

TABLE 22 DIMENSIONS OF SHORT DESIGN DWV TEES WITH SIDE INLET(S) (90 deg TO MAIN INLET), SINGLE AND DOUBLE

Nominal Sizes	K	KK	X
3 × 3 with 2 in. inlet(s)	74.7	38.1	57.2
3 × 3 with 1½ in. inlet(s)	74.7	38.1	53.8

GENERAL NOTES:
(a) Dimensions are in millimeters.
(b) To determine whether inlets are right hand or left hand, place the fitting with large side inlet facing toward you. The side on which the other inlet appears determines its designation.

Copyright ASME International
Provided by IHS under license with ASME
No reproduction or networking permitted without license from IHS
Not for Resale

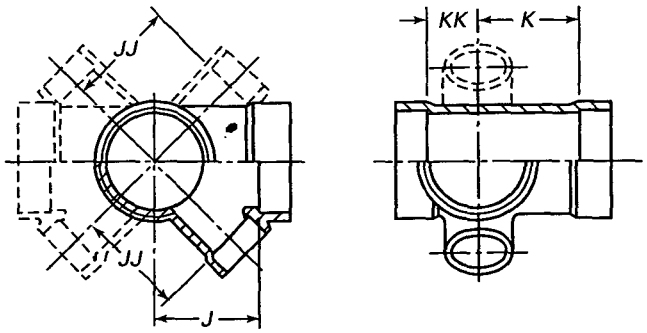

C × C × C With One or Two C Side Inlet(s)
DWV Tees — Short Design

TABLE 23 DIMENSIONS OF SHORT DESIGN DWV TEES WITH SIDE INLET(S) (45 deg TO MAIN INLET), SINGLE AND DOUBLE

Nominal Size	*K*	*KK*	*J*	*JJ*
3 × 3 × 3 with 2 in. inlet(s)	74.7	39.6	77.7	85.9
3 × 3 × 3 with 1½ in. inlet(s)	74.7	39.6	77.7	79.2

GENERAL NOTES:
(a) Dimensions are in millimeters.
(b) To determine whether inlets are right hand or left hand, place the fitting with large side inlet facing toward you. The side on which the other inlet appears determines its designation.

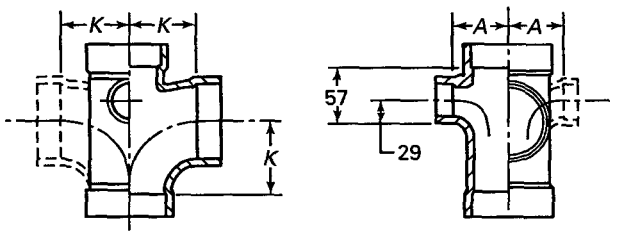

C × C × C With One or Two C Side Inlet(s)
C × C × C × C With One or Two C Side Inlet(s)
DWV Tees — Long Design

TABLE 24 DIMENSIONS OF LONG DESIGN DWV TEES WITH SIDE INLET(S) (90 deg TO MAIN INLET), SINGLE AND DOUBLE

Nominal Size	*A*	*K*
3 × 3 × 3 with 2 in. inlet(s)	62.0	74.7
3 × 3 × 3 with 1½ in. inlet(s)	55.6	74.7
3 × 3 × 3 with 1¼ in. inlet(s)	52.3	74.7
4 × 4 × 4 with 2 in. inlet(s)	73.2	98.6
4 × 4 × 4 with 1¼ in. inlet(s)	66.5	98.6

GENERAL NOTES:
(a) Dimensions are in millimeters.
(b) To determine whether inlets are right hand or left hand, place the fitting with large side inlet facing toward you. The side on which the other inlet appears determines its designation.

Copyright ASME International
Provided by IHS under license with ASME
No reproduction or networking permitted without license from IHS
Not for Resale

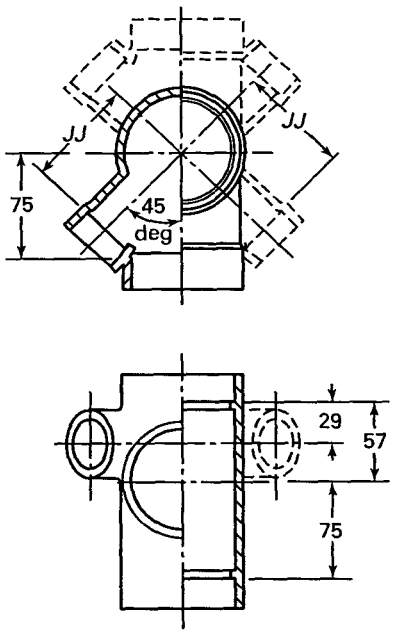

C × C × C With One or Two C Side Inlet(s)
C × C × C × C With One or Two C Side Inlet(s)
DWV Tees — Long Design

TABLE 25 DIMENSIONS OF LONG DESIGN DWV TEES WITH SIDE INLET(S) (45 deg TO MAIN INLET), SINGLE AND DOUBLE

Nominal Size	*JJ*
3 × 3 × 3 with 2 in. inlet(s)	88.9
3 × 3 × 3 with 1½ in. inlet(s)	81.0

GENERAL NOTES:
(a) Dimensions are in millimeters.
(b) To determine whether inlets are right hand or left hand, place the fitting with large side inlet facing toward you. The side on which the other inlet appears determines its designation.

Copyright ASME International
Provided by IHS under license with ASME
No reproduction or networking permitted without license from IHS
Not for Resale

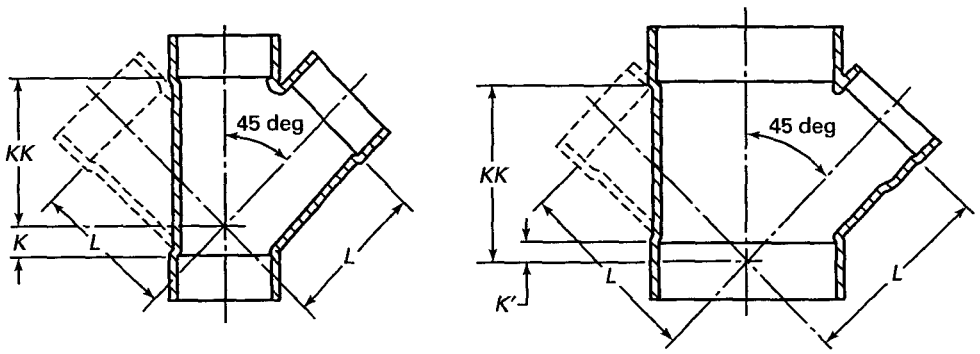

C × C × C
C × C × C × C
DWV 45 deg Ys

TABLE 26 DIMENSIONS OF SINGLE AND DOUBLE DWV 45 deg Ys

Nominal Size	*K*	*K′*	*KK*	*L*	Nominal Size	*K*	*K′*	*KK*	*L*
1¼	7.9	...	47.8	47.8	4	26.9	...	136.7	136.7
1½	9.7	...	55.6	55.6	4 × 4 × 3	8.6	...	117.3	120.7
1½ × 1½ × 1¼	6.4	...	50.8	52.3	4 × 4 × 2	...	8.6	98.6	106.4
1½ × 1¼ × 1½	11.2	...	53.8	52.3	4 × 4 × 1½	...	16.8	90.4	100.1
1½ × 1¼ × 1¼	6.4	...	49.3	49.3	4 × 4 × 1¼	...	21.3	85.9	96.8
2	9.1	...	69.9	69.9	5	30.2	...	165.1	165.1
2 × 2 × 1½	5.6	...	63.5	65.0	5 × 5 × 4	14.2	...	146.1	152.4
2 × 2 × 1¼	1.5	...	58.7	62.0	5 × 5 × 3	...	1.5	130.0	140.5
2 × 1½ × 2	13.5	...	66.5	64.3					
2 × 1½ × 1½	7.1	...	55.6	55.6	6	38.1	...	195.3	195.3
2 × 1½ × 1¼	1.5	...	59.4	65.0	6 × 6 × 4	1.5	...	158.8	169.9
					6 × 6 × 3	...	15.7	142.7	157.2
3	20.6	...	104.6	104.6	6 × 6 × 2	...	31.8	124.0	144.5
3 × 3 × 2	3.0	...	85.9	88.9	6 × 4 × 4	1.5	...	134.9	134.9
3 × 3 × 1½	...	4.8	76.2	82.6	6 × 4 × 2	...	31.8	100.1	109.5
3 × 3 × 1¼	...	9.7	73.2	77.7					
3 × 2 × 3	2.3	...	69.9	69.9	8	35.1	...	258.8	258.8
3 × 1½ × 3	...	9.7	62.0	64.8	8 × 8 × 6	13.5	...	223.0	234.2
3 × 1½ × 1½	...	8.6	55.6	55.6	8 × 6 × 6	13.5	...	196.9	196.9

GENERAL NOTE: Dimensions are in millimeters.

Copyright ASME International
Provided by IHS under license with ASME
No reproduction or networking permitted without license from IHS
Not for Resale

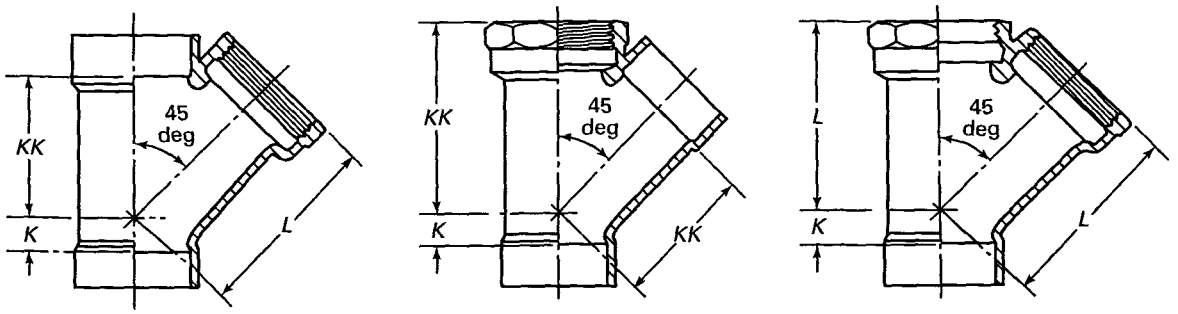

C × C × F C × F × C C × F × F

DWV 45 deg Ys

TABLE 27 DIMENSIONS OF DWV 45 deg Ys

Nominal Size	*K*	*KK*	*L*
1¼	7.9	47.8	69.9
1½	9.7	55.6	79.2
2	14.2	69.9	95.3
2 × 1½ × 2	14.2	73.2	95.3
3	20.6	104.6	144.5
4	26.9	136.7	176.3

GENERAL NOTE: Dimensions are in millimeters.

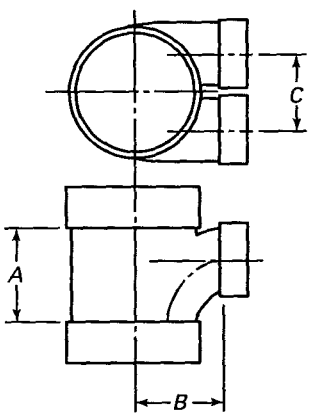

DWV Horizontal Twin Branch Tees
C × C × C × C

TABLE 28 DIMENSIONS FOR DWV HORIZONTAL TWIN BRANCH TEES

Nominal Size	*A*	*B*	Min., *C*
3 × 3 × 1½ × 1½	62.0	56.4	47.8
3 × 3 × 1¼ × 1¼	55.6	55.6	46.5

GENERAL NOTE: Dimensions are in millimeters.

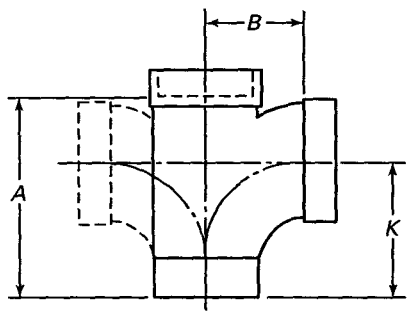

DWV Fitting Tees — Single and Double
FTG × C × C
FTG × C × C × C

TABLE 29 DIMENSIONS FOR DWV FITTING TEES, SINGLE AND DOUBLE

Nominal Size	*A*	*B*	*K*
1½	70.6	35.8	50.0
2	87.6	47.8	63.5
3 × 3 × 2	95.3	60.5	66.5
3 × 3 × 1½	81.0	54.9	56.4
3 × 3 × 1¼	69.1	50.8	47.5
3	133.4	73.2	91.9
3 × 2 × 3	125.5	73.2	91.9

GENERAL NOTE: Dimensions are in millimeters.

Copyright ASME International
Provided by IHS under license with ASME
No reproduction or networking permitted without license from IHS
Not for Resale

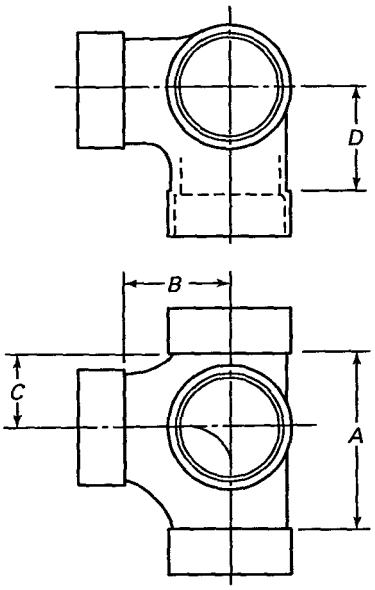

DWV Utility Tees
C × C × C × C

TABLE 30 DIMENSIONS FOR DWV UTILITY TEES

Nominal Size	A	B	C	D
1½	57.2	36.6	20.6	36.6
2	81.0	49.3	31.8	49.3
2 × 2 × 1½ × 1½	58.7	42.2	22.4	42.2

GENERAL NOTE: Dimensions are in millimeters.

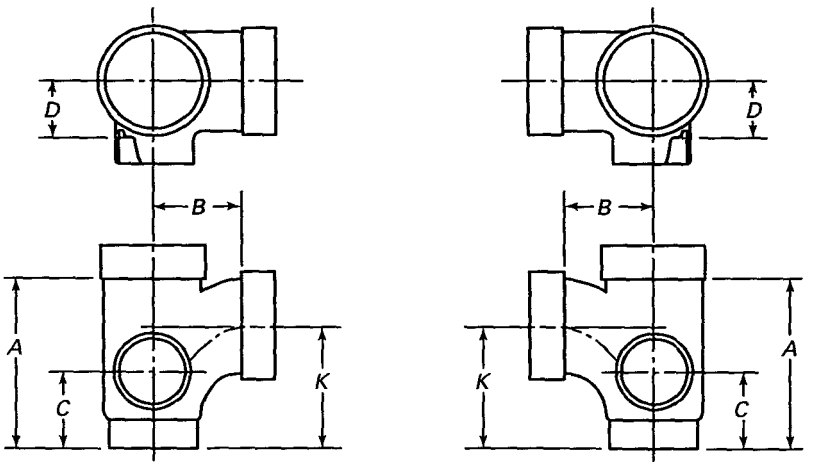

Left Side Inlet
FTG × C × C × C
(a)

Right Side Inlet
FTG × C × C × C
(b)

TABLE 31 DIMENSIONS FOR DWV FITTING TEES WITH SIDE INLET MAXIMUM BELOW CENTER LINE

Nominal Size	A	B	C	D	K
3 × 3 × 3 × 1½	133.4	74.7	54.9	44.5	95.3
3 × 3 × 3 × 2	133.4	74.7	61.2	44.5	95.3

GENERAL NOTE: Dimensions are in millimeters.

Copyright ASME International
Provided by IHS under license with ASME
No reproduction or networking permitted without license from IHS
Not for Resale

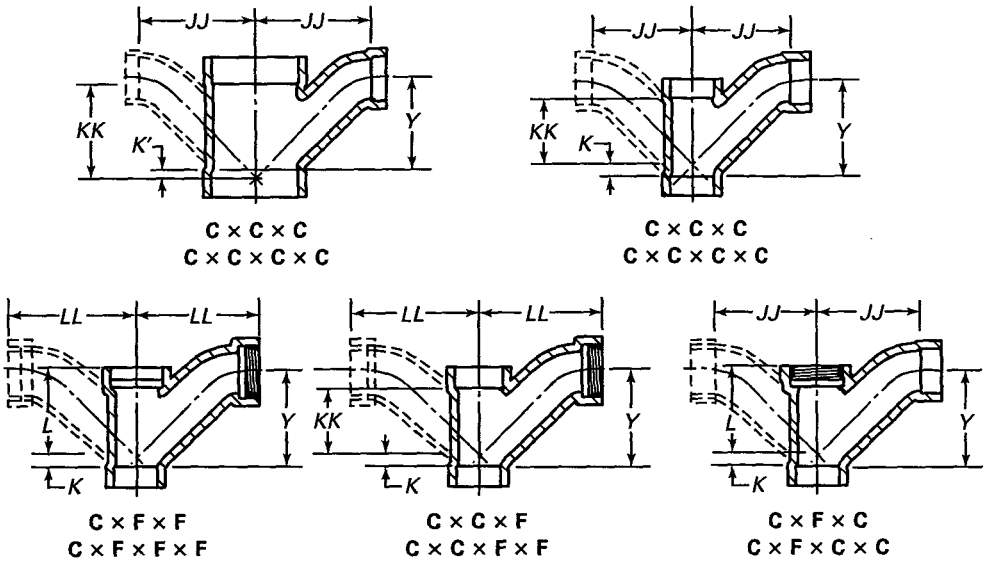

TABLE 32 DIMENSIONS OF DWV LONG TURN T-Ys, SINGLE AND DOUBLE

Nominal Size	JJ	K	K′	KK	L	LL	Y
1¼	63.50	7.87	...	44.45	66.55	100.08	63.50
1½	76.20	9.65	...	53.85	79.25	96.77	76.20
1½ × 1½ × 1¼	71.37	4.83	...	49.28	76.20	96.77	66.55
2	101.60	14.22	...	66.55	91.95	122.17	101.60
2 × 2 × 1½	87.38	6.35	...	60.45	85.85	112.78	81.03
2 × 2 × 1¼	76.20	1.52	...	53.85	...	...	68.33
2 × 1½ × 2	101.60	14.22	...	71.37	...	...	101.60
2 × 1¼ × 2	101.60	12.70	...	61.98	...	...	101.60
3	149.35	20.57	...	98.55	138.18	228.60	149.35
3 × 3 × 2	119.13	2.29	...	82.55	...	...	104.65
3 × 3 × 1½	100.08	...	5.59	73.15	...	...	82.55
3 × 3 × 1¼	95.25	...	10.41	70.61	...	...	71.37
3 × 2 × 3	149.35	20.57	...	87.38	...	...	149.35
3 × 2 × 2	114.30	1.52	...	69.85	...	...	101.60
4	196.85	26.92	...	127.00	169.93	228.60	196.85
4 × 4 × 3	142.75	11.18	...	114.30	...	...	130.05
4 × 4 × 2	130.05	...	6.35	98.55	...	...	107.95
4 × 4 × 1½	123.95	...	15.75	88.14	...	...	91.95
5	252.48	31.75	...	165.10	...	...	248.41
5 × 5 × 4	218.95	14.99	...	148.34	...	...	202.44
5 × 5 × 3	184.15	...	1.52	131.83	...	...	156.46
6	299.97	38.86	...	197.61	...	...	295.15
6 × 6 × 5	265.18	22.35	...	180.09	...	...	248.41
6 × 6 × 4	230.89	4.83	...	161.04	...	...	200.91
6 × 6 × 3	195.33	...	12.70	144.53	...	...	155.45

GENERAL NOTE: Dimensions are in millimeters.

Copyright ASME International
Provided by IHS under license with ASME
No reproduction or networking permitted without license from IHS
Not for Resale

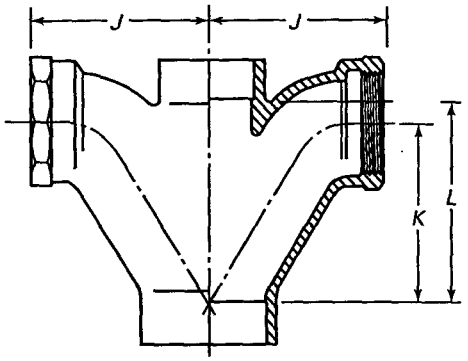

C × C × F × F
DWV Double Short T–Y

TABLE 33 DIMENSIONS OF DWV DOUBLE SHORT T–Y

Nominal Size	J	K	L
2 × 1½ × 1½ × 1½	77.7	81.0	82.6
2 × 2 × 1½ × 1½	87.4	91.9	93.0
2 × 1½ × 2 × 2	95.3	106.4	106.4
2 × 1½ × 1¼ × 1¼	77.7	81.0	90.4

GENERAL NOTE: Dimensions are in millimeters.

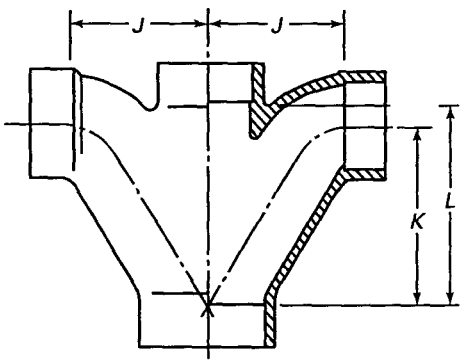

C × C × C × C
DWV Double Short T–Y

TABLE 34 DIMENSIONS OF DWV DOUBLE SHORT T–Y

Nominal Size	J	K	L
1½	63.8	82.8	83.6
2	85.9	103.9	101.6
2 × 2 × 1½ × 1½	70.6	91.9	93.5
2 × 1½ × 2 × 2	76.2	106.4	106.4
2 × 1½ × 1½ × 1½	60.5	81.0	82.6
3	112.8	143.8	146.1

GENERAL NOTE: Dimensions are in millimeters.

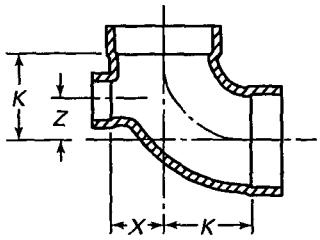

DWV 90 deg Elbow
With High Heel Inlet
C × C × C

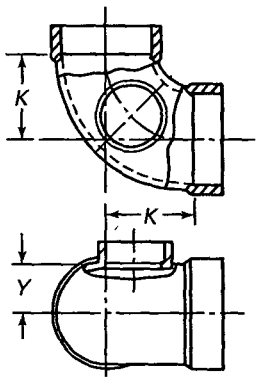

DWV 90 deg Elbow
With Side Inlet
C × C × C

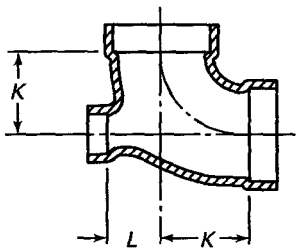

DWV 90 deg Elbow
With Low Heel Inlet
C × C × C

TABLE 35 DIMENSIONS OF DWV ELBOW WITH INLETS

Nominal Size	K	X	Y	Z	L
3 × 3 × 2	74.7	42.9	42.9	38.1	32.5
3 × 3 × 1½	74.7	42.9	42.9	38.1	30.2
3 × 3 × 1¼	74.7	42.9	42.9	38.1	28.4
4 × 4 × 2	98.6	53.8	57.2	50.8	47.8
4 × 4 × 1½	98.6	52.3	57.2	50.8	32.5

GENERAL NOTE: Dimensions are in millimeters.

Copyright ASME International
Provided by IHS under license with ASME
No reproduction or networking permitted without license from IHS
Not for Resale

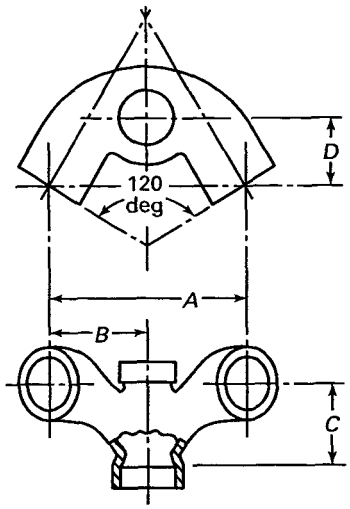

TABLE 36 DIMENSIONS OF DWV DOUBLE BRANCH SINK FITTINGS

Type	Nominal Size	A	B	C	D
C × C × F × F	2 × 1½ × 1½ × 1½	158.8	79.2	57.2	47.8
C × C × C × C	2 × 1½ × 1½ × 1½	158.8	79.2	57.2	47.8

GENERAL NOTE: Dimensions are in millimeters.

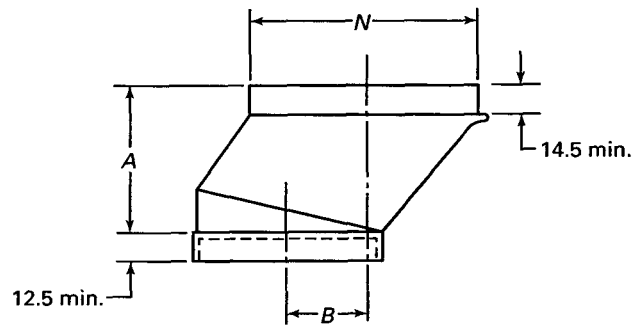

FTG × C

TABLE 37 DIMENSIONS OF DWV CLOSET OFFSET FITTINGS

			N	
Nominal Size	A	B	Max.	Min.
4	63.5	49.3	104.686	104.826
4 × 3	63.5	36.6	104.686	104.826

GENERAL NOTE: Dimensions are in millimeters.

Copyright ASME International
Provided by IHS under license with ASME
No reproduction or networking permitted without license from IHS
Not for Resale

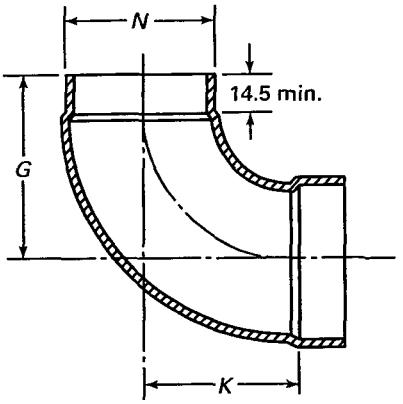

DWV 90 deg Closet Elbow
FTG × C

TABLE 38 DIMENSIONS OF DWV 90 deg CLOSET ELBOW

Nominal Size	K	N		G
		Min.	Max.	
4	98.6	104.686	104.826	112.8
3	74.7	79.286	79.426	88.9
4 × 3	73.2	104.686	104.826	94.5

GENERAL NOTE: Dimensions are in millimeters.

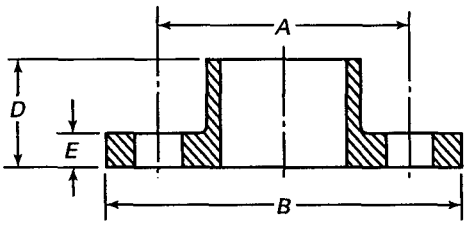

Floor Flange Vent Support
[Note (1)]

TABLE 39 DIMENSIONS OF FLOOR FLANGE VENT SUPPORT

Nominal Size	A	B	D	Min., E	Bolt Hole Size	Number of Holes
1¼	66.5	77.7	15.7	4.8	5.6	2
1½	66.5	77.5	17.5	4.8	5.6	2
2	85.9	100.1	19.1	4.8	5.6	2
3	114.3	130.0	23.9	4.8	6.4	2
4	139.7	155.4	30.2	4.8	6.4	2
5	176.3	203.2	36.6	9.7	11.2	4
6	200.2	228.6	42.9	12.7	14.2	4
8	254.0	279.4	53.8	15.7	14.2	4

GENERAL NOTE: Dimensions are in millimeters.
NOTE:
(1) May be round or oval design.

Copyright ASME International
Provided by IHS under license with ASME
No reproduction or networking permitted without license from IHS
Not for Resale

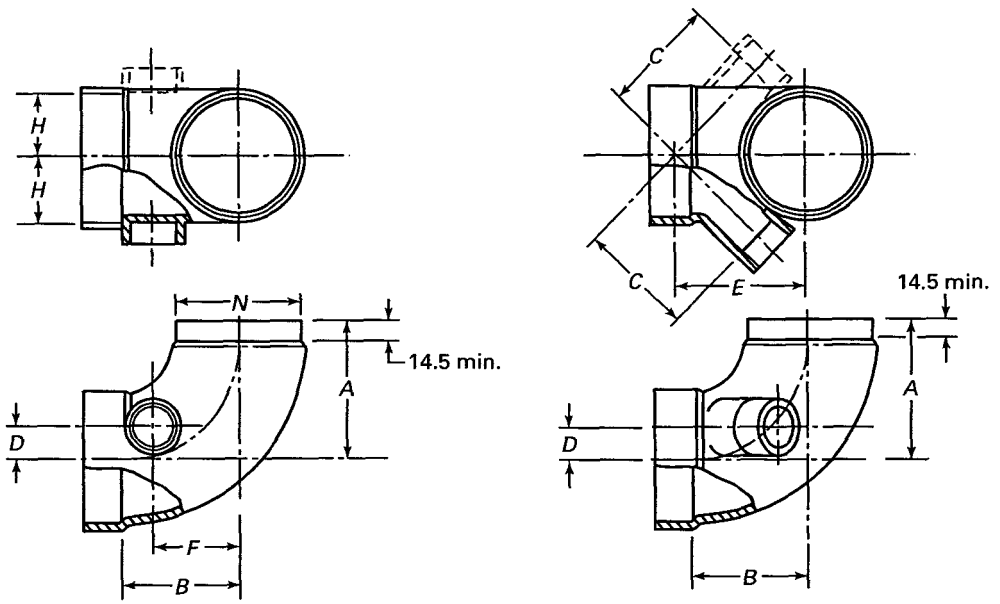

FTG × C With One or Two C Side Inlet(s)
DWV — 90 deg Closet Elbows

TABLE 40 DIMENSIONS OF DWV CLOSET ELLS WITH SIDE INLET(S) (90 deg AND 45 deg) TO MAIN INLET(S)

								N	
Nominal Size	***A***	***B***	***C***	***D***	***E***	***F***	***H***	**Min.**	**Max.**
4 × 3 with 1½ in inlet(s)	112.78	98.55	91.95	14.22	102.36	71.37	43.69	104.72	104.83
4 × 4 with 1½ in inlet(s)	112.78	98.55	96.77	25.40	107.19	53.09	53.09	104.72	104.83

GENERAL NOTES:
(a) Dimensions are in millimeters.
(b) To determine whether inlets are right hand or left hand, place the fitting with large side inlet facing up and toward you. The side on which the other inlet appears determines its designation.

Copyright ASME International
Provided by IHS under license with ASME
No reproduction or networking permitted without license from IHS
Not for Resale

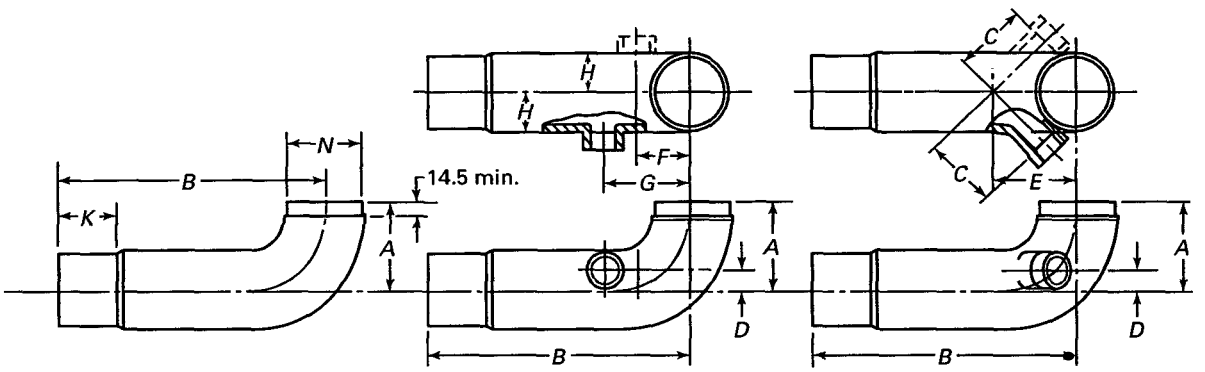

FTG × FTG FTG × C With One or Two C Side Inlet(s)

DWV — 90 deg Closet Elbows

TABLE 41 DIMENSIONS OF DWV CLOSET ELLS WITH OR WITHOUT SIDE INLET(S) (90 deg AND 45 deg) TO MAIN INLET(S)

Nominal Size	Min., A	B	C	D	E	F	G	H	K	N Min.	N Max.
4 × 3	112.8	355.6	...	...	...	...	...	...	80.8	104.724	...
4 × 3 with 1½ in inlet(s)	112.8	355.6	91.9	14.2	102.4	74.7	119.1	43.7	80.8	...	104.826
4 × 4	112.8	355.6	...	...	...	...	...	...	80.8	104.724	...
4 × 4 with 1½ in inlet(s)	112.8	355.6	96.8	25.4	107.2	71.4	115.8	53.1	80.8	...	104.826

GENERAL NOTES:
(a) Dimensions are in millimeters.
(b) To determine whether inlets are right hand or left hand, place the fitting with large side inlet facing up and toward you. The side on which the other inlet appears determines its designation.
(c) Closet flange attaches to 4 in. end.

Copyright ASME International
Provided by IHS under license with ASME
No reproduction or networking permitted without license from IHS
Not for Resale

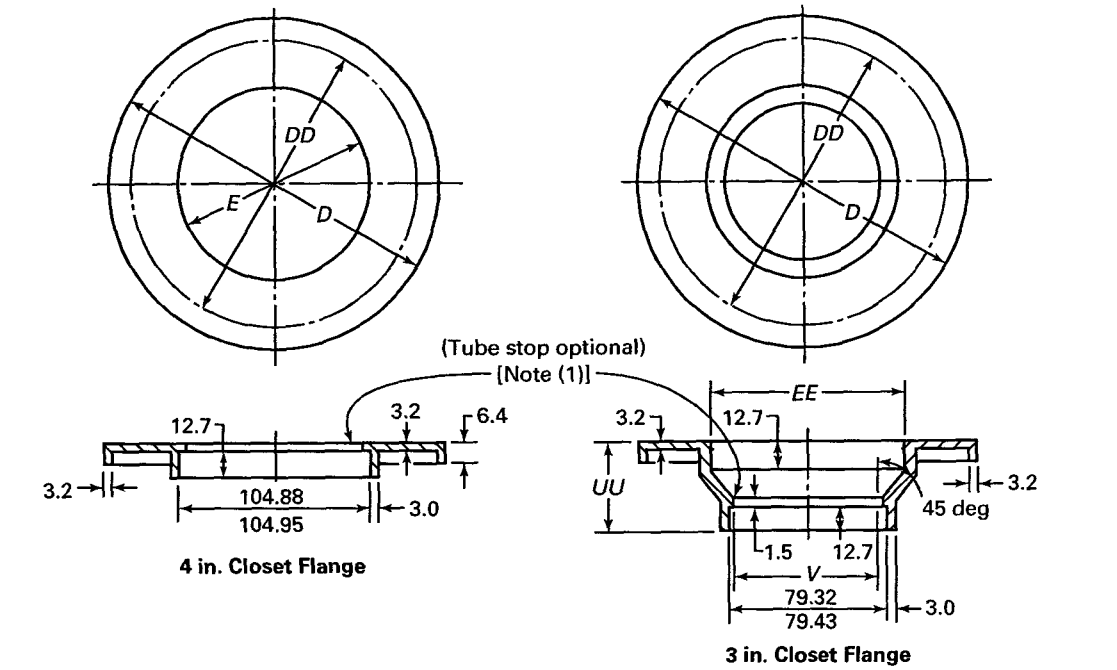

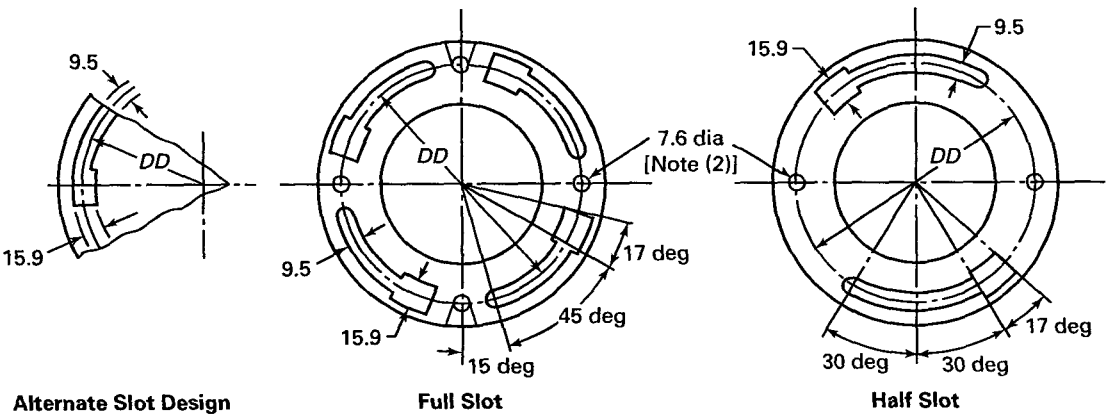

Suggested Slot Arrangements

TABLE 42 DIMENSIONS OF DWV CLOSET FLANGES

D	Outside diameter of flange, max.	177.8
DD	Diameter of center line of slots	152.4
E	Inside diameter of 4 in. flange (if tube stop is used)	100.1
EE	Inside diameter of 3 in. flange	104.6
UU	Length of 3 in. flange	42.9
V	Bore tube stop in 3 in. flange	74.7

GENERAL NOTE: Dimensions are in millimeters.

NOTES:

(1) 45 deg angle may be extended to face flange.

(2) Optional:

(a) the addition of 7.6 mm diam. holes with or without countersink on bolt circle *DD* and/or

(b) two 9.7 wide notches on center-line extending from the outer edge of flange.

Copyright ASME International
Provided by IHS under license with ASME
No reproduction or networking permitted without license from IHS
Not for Resale

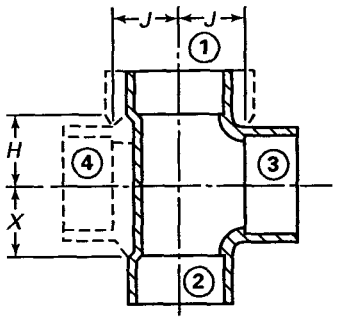

Vent Tees and Vent Double Tees
Vent Increasers With Side Inlets

C × C × C and C × C × C × C
① ② ③ ① ② ③ ④

TABLE 43 DIMENSIONS OF VENT TEES AND VENT DOUBLE TEES

Nominal Size	*H*	*J*	*X*
1¼	22.1	22.1	22.1
1½	25.4	25.4	25.4
1½ × 1½ × 1¼	22.1	25.4	22.1
2	31.8	31.8	31.8
2 × 2 × 1½	25.4	31.8	25.4
2 × 2 × 1¼	22.1	31.8	22.1
3	44.5	44.5	44.5
3 × 3 × 2	31.8	44.5	31.8
3 × 3 × 1½	25.4	44.5	25.4
3 × 3 × 1¼	22.1	44.5	22.1
3 × 4 × 2	30.2	55.6	30.2
3 × 4 × 1½	26.9	53.8	25.4

GENERAL NOTES:
(a) Dimensions are in millimeters.
(b) Vent fittings are designed for dry vents only. They are not specified for waste lines. Vent fittings must be marked as follows: VENT ONLY.

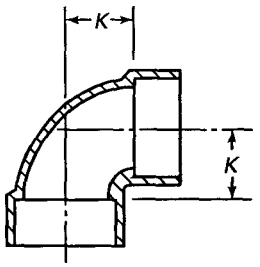

Vent Elbows
C × C

TABLE 44 DIMENSIONS OF VENT ELBOWS

Nominal Size	*K*
1¼	22.1
1½	25.4
2	31.8
3	44.5

GENERAL NOTES:
(a) Dimensions are in millimeters.
(b) Vent fittings are designed for dry vents only. They are not specified for waste lines. Vent fittings must be marked as follows: VENT ONLY.

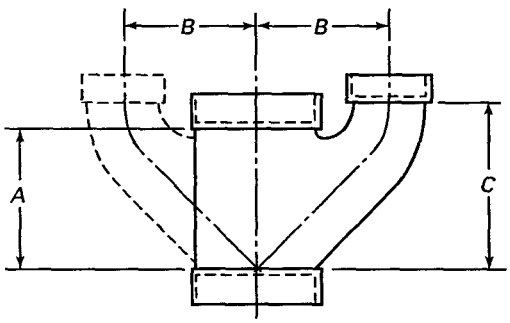

DWV Stack Upturns,
Single and Double
C × C × C and C × C × C × C

TABLE 45 DIMENSIONS OF DWV STACK UPTURNS, SINGLE AND DOUBLE

Nominal Size	*A*	*B*	*C*
2	82.6	88.9	119.9
2 × 2 × 1½	65.0	79.2	97.5
2 × 1½ × 1¼	60.5	69.9	88.1
3	129.3	95.3	144.5
3 × 3 × 2	87.4	86.6	106.4
3 × 3 × 1½	68.3	80.3	87.4
4 × 4 × 3	127.8	108.0	143.8

GENERAL NOTE: Dimensions are in millimeters.

Copyright ASME International
Provided by IHS under license with ASME
No reproduction or networking permitted without license from IHS
Not for Resale

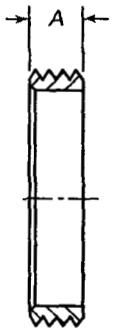

DWV Slip Joint Thread Pieces
C × SJ
[Note (1)]

TABLE 46 DIMENSIONS OF SLIP JOINT PIECES

Nominal Size	A
1¼	9.7
1½	9.7
1¼ × 1½	9.7
2	9.7

GENERAL NOTE: Dimensions are in millimeters.
NOTE:
(1) For slip joint threads, see Table 49.

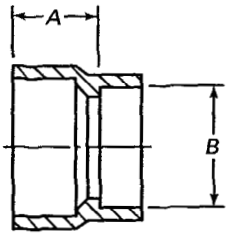

DWV Trap Extended Bushing
FTG × Outside Diameter of Tube (FTG × O.D. Tube)

TABLE 48 DIMENSIONS OF TRAP EXTENDED BUSHINGS

Nominal Size	A	B
1½ × 1¼ O.D.	19.1	31.8
1½ × 1½ O.D.	19.1	38.1

GENERAL NOTE: Dimensions are in millimeters.

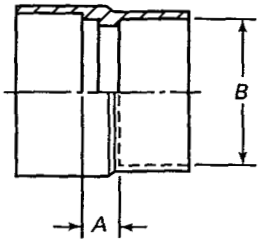

DWV Trap Coupling
C × O.D. Tube

TABLE 47 DIMENSIONS OF TRAP COUPLING

Nominal Size	A	B
1¼ × 1¼ O.D.	3.3	31.8
1½ × 1½ O.D.	5.6	38.1
1½ × 1¼ O.D.	6.4	31.8
2 × 1½ O.D.	10.4	38.1

GENERAL NOTE: Dimensions are in millimeters.

Copyright ASME International
Provided by IHS under license with ASME
No reproduction or networking permitted without license from IHS
Not for Resale

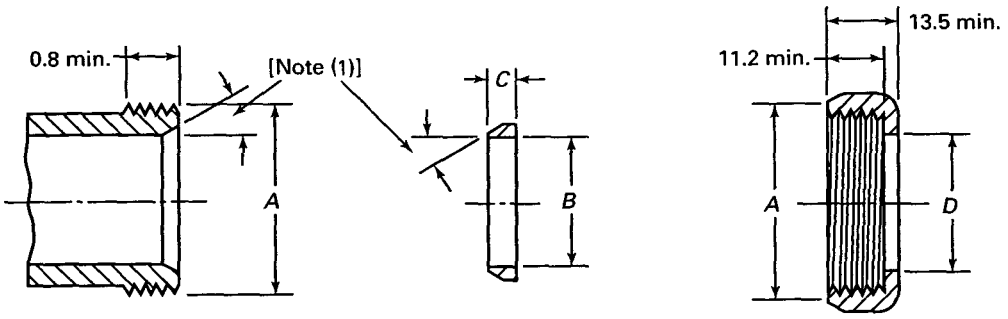

Fitting
SJ

Gasket
[Note (2)]

Nut
[Note (3)]

DWV Slip Joint Ends

TABLE 49 DIMENSIONS OF SLIP JOINT ENDS

Nominal Size	A	B	Min., C	D
1¼	1¼ NPSM	32.0	11.7	32.5
1½	1½ NPSM	38.4	4.8	38.9
2	2 NPSM	51.1	4.8	51.6

GENERAL NOTE: Dimensions are in millimeters.

NOTES:
(1) Angles must be equal.
(2) Gasket to be pliable material not subject to aging or drying out.
(3) Nut may be any material specified in Section 7, or any other suitable nonferrous alloy.

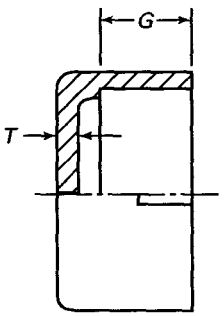

DWV Cap
C

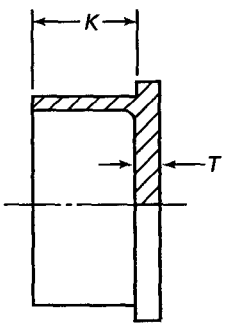

DWV Fitting Plug
FTG

TABLE 50 DIMENSIONS OF DWV CAP

Nominal Size	G	T
1¼	12.7	2.5
1½	14.2	2.5
2	15.7	2.5
3	19.1	3.0
4	25.4	3.0

GENERAL NOTE: Dimensions are in millimeters.

TABLE 51 DIMENSIONS OF DWV PLUGS

Nominal Size	K	T
1¼	14.2	2.5
1½	15.7	2.5
2	17.5	2.5
3	20.6	3.0

GENERAL NOTE: Dimensions are in millimeters.

Copyright ASME International
Provided by IHS under license with ASME
No reproduction or networking permitted without license from IHS
Not for Resale

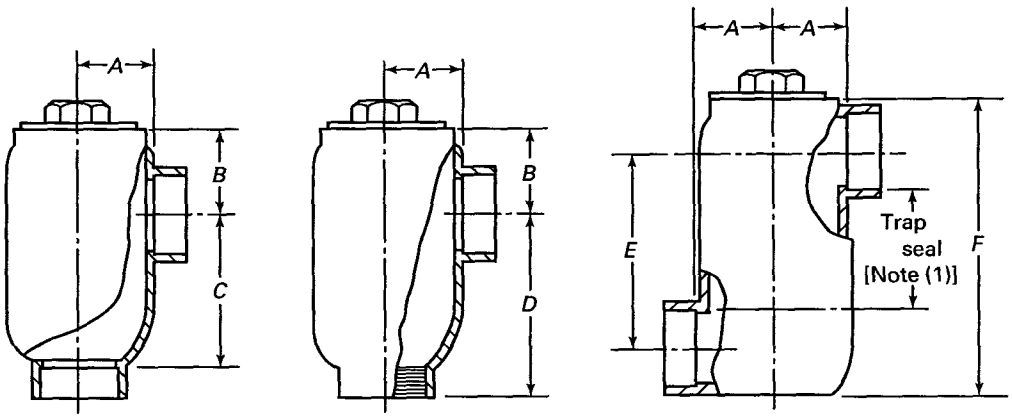

C × C C × F C × C

DWV One Piece Drum Traps

TABLE 52 DIMENSIONS OF DWV DRUM TRAPS

Type	Drum Size	Pipe and Tubing Size	Plug Size	*A*	*B*	*C*	*D*	*E*	Max., *F*
C × C	3 × 5	1½	2	38.1	43.7	75.4	...	...	...
C × F	3 × 5	1½	2	38.1	43.7	...	81.8	...	...
C × C	3 × 6	1½	2	38.1	...	...	...	98.6	171.5
C × F	4 × 5	1½	3	50.8	31.0	...	82.6	...	...
C × C	4 × 5	1½	3	50.8	31.0	...	...	...	...
C × C	4 × 8	1½	3	50.8	...	...	...	119.9	203.2
C × F	4 × 5	1¼	3	50.8	31.0	...	82.6	...	...
C × C	4 × 5	1¼	3	50.8	31.0	...	...	...	...

GENERAL NOTE: Dimensions are in millimeters.

NOTE:

(1) Trap seal is 50 mm minimum.

Copyright ASME International
Provided by IHS under license with ASME
No reproduction or networking permitted without license from IHS
Not for Resale

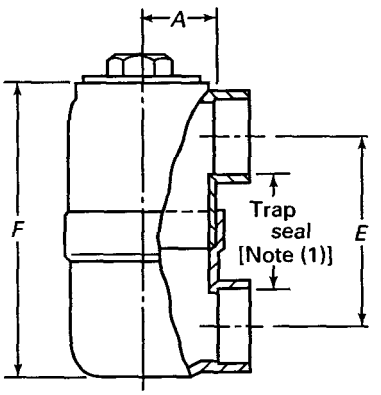

C × C
DWV Swivel Drum Traps

TABLE 53 DIMENSIONS OF DWV SWIVEL DRUM TRAP

Type	Drum Size	Tube Size	Plug Size	*A*	*E*	Max., *F*
C × C	3 × 6	1½	2	38.1	98.6	171.5
C × C	4 × 8	1½	3	50.8	119.9	203.2
C × C	3 × 6	2	2	38.1	93.0	169.2
C × C	4 × 8	2	3	50.8	110.2	197.6

GENERAL NOTE: *Dimensions are in millimeters.*
NOTE:
(1) Trap seal is 50 mm minimum.

Copyright ASME International
Provided by IHS under license with ASME
No reproduction or networking permitted without license from IHS
Not for Resale

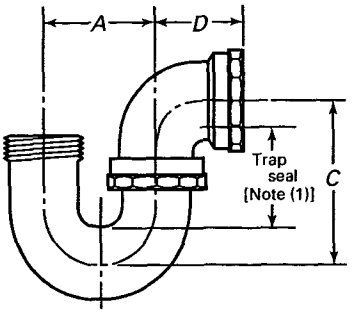

DWV P-Trap With Union Joint SJ × F

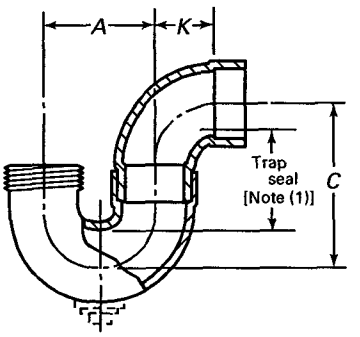

DWV P-Trap With or Without Cleanout SJ × C

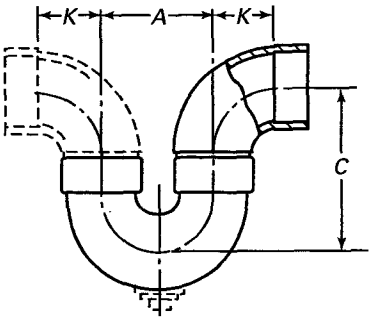

DWV P-Trap or Running Trap With or Without Cleanout C × C

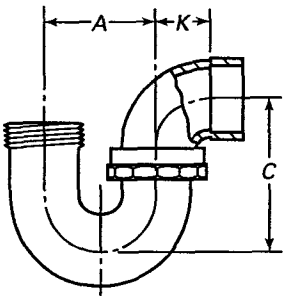

DWV P-Trap With Union Joint SJ × C

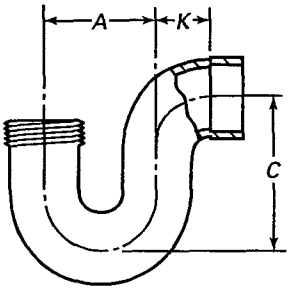

DWV One Piece P-Trap SJ × C

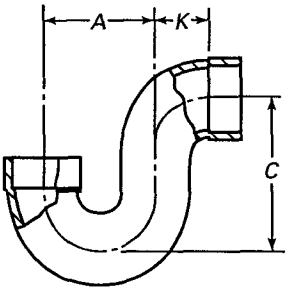

DWV One Piece Line P-Trap C × C

TABLE 54 DIMENSIONS OF DWV TRAPS

Description	Nominal Size	A	K	Min., C	D
P - Trap SJ × C with or without cleanout	1¼	55.6	30.2	83.3	...
P - Trap C × C with or without cleanout	1½	62.0	36.6	89.7	...
Running P - Trap C × C with or without cleanout	2	74.7	49.3	108.0	...
P - Trap Swivel SJ × C	1¼	60.5	28.4	80.3	49.3
P - Trap Swivel SJ × F	1½	66.5	28.4	87.4	49.3
P - Trap One Piece SC	2	79.2	37.3	99.3	71.4
P - Trap One Piece CC	1½	62.0	36.6	89.7	...

GENERAL NOTE: Dimensions are in millimeters.

NOTE:

(1) Trap seal is 50 mm minimum.

Copyright ASME International
Provided by IHS under license with ASME
No reproduction or networking permitted without license from IHS
Not for Resale

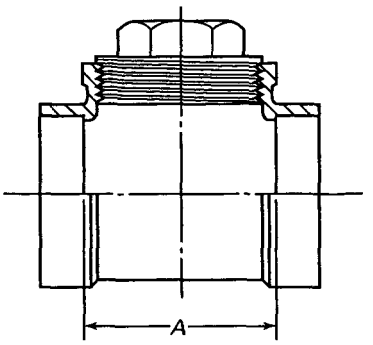

DWV Test Tees With Plug
C × C × F

TABLE 55 DIMENSIONS OF DWV TEST TEES WITH PLUG

Nominal Size	*A*
1¼ × 1¼ × 1¼	50.8
1½ × 1½ × 1½	57.2
2 × 2 ×2	69.9
3 × 3 × 3	98.6
4 × 4 × 4	139.7

GENERAL NOTE: Dimensions are in millimeters.

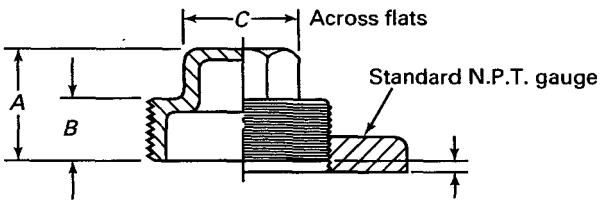

DWV Plug

One to two threads large, hand tight.

TABLE 56 DIMENSIONS OF DWV PLUGS

Nominal Size	*A*	*B*	*C*
1¼	22.4	11.2	22.4
1½	25.4	12.7	25.4
2	27.7	13.5	28.4
3	33.3	15.7	35.1
4	35.1	16.8	35.1
5	36.6	17.5	38.1
6	38.9	18.3	38.1
8	44.5	19.1	44.5

GENERAL NOTE: Dimensions are in millimeters.

Copyright ASME International
Provided by IHS under license with ASME
No reproduction or networking permitted without license from IHS
Not for Resale

MANDATORY APPENDIX I
U.S. CUSTOMARY TABLES

TABLE I1 INSPECTION TOLERANCE TABLE

Nominal Size	in. ±
1¼, 1½, and 2	0.08
3	0.11
4 and 5	0.12
6 and 8	0.16

Copyright ASME International
Provided by IHS under license with ASME
No reproduction or networking permitted without license from IHS
Not for Resale

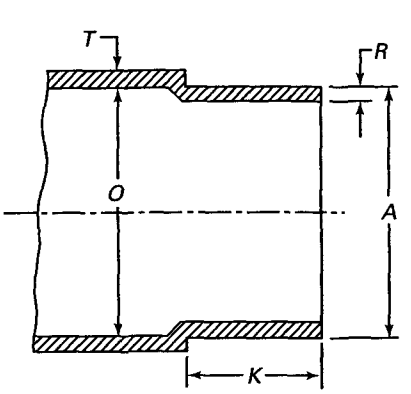

Male End
(FTG)
(a)

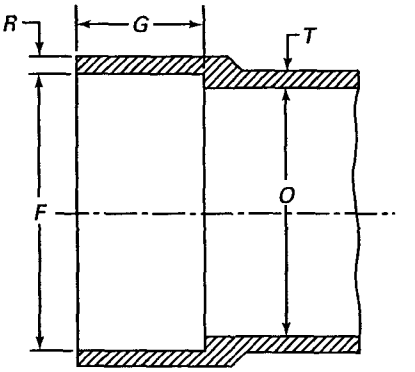

Female End
(C)
(b)

TABLE I2 DIMENSIONS OF SOLDER JOINT ENDS — DWV

Nominal Size [Note (1)]	Male End			Female End			Metal Thickness [Note (4)]		Inside Diameter of Fitting, *O*
	Outside Diameter, *A* [Note (2)]		Length, *K* [Note (3)]	Inside Diameter, *F* [Note (2)]		Depth, *G*	Body, *T*	Joint, *R*	
	Min.	Max.	Min.	Min.	Max.	Min.			Min.
1¼	1.372	1.377	0.56	1.378	1.382	0.50	0.10	0.07	1.29
1½	1.621	1.627	0.62	1.628	1.633	0.56	0.10	0.08	1.53
2	2.121	2.127	0.69	2.128	2.133	0.62	0.10	0.09	2.01
3	3.121	3.127	0.81	3.128	3.133	0.75	0.12	0.10	2.98
4	4.121	4.127	1.06	4.128	4.133	1.00	0.12	0.12	3.93
5	5.121	5.127	1.31	5.128	5.133	1.25	0.19	0.19	4.91
6	6.121	6.127	1.62	6.128	6.133	1.50	0.19	0.19	5.88
8	8.119	8.127	2.12	8.128	8.133	2.00	0.22	0.22	7.78

GENERAL NOTES:
(a) Dimensions are in inches.
(b) The sketches and designs of fittings are illustrative only. The dimensions herein shall govern in all cases.

NOTES:
(1) For size designation of fitting, see Section 5.
(2) For ovality, see para. 9.2.
(3) *K* dimensions of 0.44, 0.50, and 0.56, and *G* dimensions of 0.38, 0.44, and 0.50, respectively for 1¼, 1½, and 2 in. sizes are sound and acceptable from an engineering standpoint. However, the cup depths specified in Table I2 are to provide greater facility in making installations.
(4) For metal thickness tolerance, see Section 8.

Copyright ASME International
Provided by IHS under license with ASME
No reproduction or networking permitted without license from IHS
Not for Resale

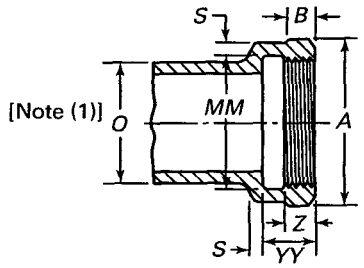

Female Threaded End
(F)

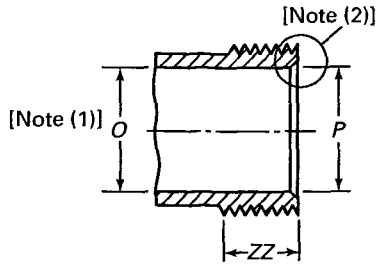

Male Threaded End
(M)

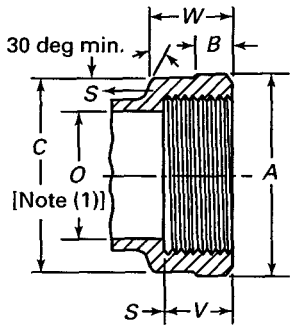

Female Threaded End
(F)

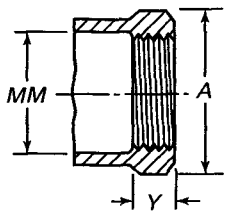

Male Threaded End
(M)

TABLE I3 DIMENSIONS OF THREADED ENDS — DWV

Nominal Thread Size [Note (3)]	Dia. of Band or Across Flats of Polygon, Min. *A*	Band Length, Min., *B*	Dia. of Body Over Thread, Min., *C*	Dia. of Recess Min., *MM* [Note (4)]	Depth of Full Thread, Min., *V*	Min., *W*	Length of Thread, Min., *Y*	End To Shoulder, *YY* ± 0.06 [Note (4)]	Thread End Wall, Min., *S* [Note (5)]	Thread End Bore, Max., *P* [Note (4)]	Length of Effective Thread, Min., *ZZ*
1¼	1.91	0.31	1.90	1.66	0.71	1.00	0.42	0.70	0.120	1.31	0.71
1½	2.17	0.34	2.17	1.91	0.72	1.00	0.42	0.72	0.130	1.55	0.72
2	2.69	0.41	2.68	2.38	0.76	1.03	0.44	0.75	0.150	2.03	0.76
3	3.88	0.55	3.88	3.50	1.20	1.46	0.77	1.20	0.190	3.05	1.20
4	4.94	0.66	4.94	4.50	1.30	1.53	0.84	1.30	0.220	4.05	1.30
5	6.12	0.78	6.12	5.56	1.41	1.65	0.94	1.41	0.280	4.98	1.41
6	7.30	0.88	7.30	6.62	1.51	1.68	0.96	1.50	0.340	6.03	1.51
8	9.38	1.12	9.37	8.62	1.71	1.75	1.06	1.70	0.375	7.95	1.71

GENERAL NOTES:

(a) Dimensions are in inches.

(b) For threads of threaded ends, see Section 10.

NOTES:

(1) For inside diameter of fitting, see Table I2.

(2) 1¼, 1½ and 2 male threaded ends may have inside chamfer for slip nut connections.

(3) Thread size is American National Standard Pipe Threads, General Purpose (inch), ASME B1.20.1.

(4) Dimensions computed using formula $E_1 - h - 2T$.

E_1 = thread pitch diameter from ASME B1.20.1

h = height of thread from ASME B1.20.1

T = metal thickness from Table I2.

(5) For initial thickness tolerance, see Section 8.

Copyright ASME International
Provided by IHS under license with ASME
No reproduction or networking permitted without license from IHS
Not for Resale

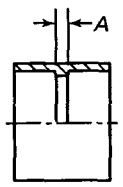

DWV Coupling
C × C

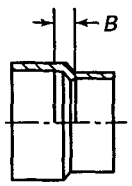

DWV Reducer
C × C

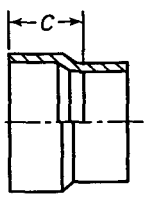

DWV Extended
Bushing
FTG × C

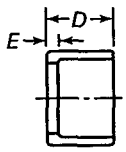

DWV Flush Bushing
FTG × C

TABLE I4 DIMENSIONS FOR DWV COUPLINGS, REDUCERS, EXTENDED BUSHINGS, AND FLUSH BUSHINGS

Nominal Size	Coupling, *A*	Reducer, *B*	Extended Bushing, *C*	Flush Bushing	
				D	*E*
1¼	0.12	...	...	...	...
1½	0.12	...	...	...	...
1½ × 1¼	...	0.25	0.75	0.62	0.12
2	0.12	...	...	...	...
2 × 1½	...	0.38	0.91	0.69	0.13
2 × 1¼	...	0.44	0.94	0.69	0.19
3	0.19	...	...	...	...
3 × 2	...	0.75	1.38	0.81	0.19
3 × 1½	...	0.94	1.31	0.81	0.25
3 × 1¼	...	0.94	1.31	...	...
4	0.19	...	...	...	...
4 × 3	...	0.34	1.62	1.06	0.31
4 × 2	...	0.50	1.75	...	...
4 × 1½	...	1.50	...	...	...
5	0.25	...	...	...	...
5 × 4	...	0.56	1.56	...	...
5 × 3	...	0.88	1.88	...	...
6	0.25	...	...	...	...
6 × 5	...	0.53	2.94	...	...
8	0.38	...	...	...	...
8 × 6	...	1.38	...	...	...

GENERAL NOTE: Dimensions are in inches.

Copyright ASME International
Provided by IHS under license with ASME
No reproduction or networking permitted without license from IHS
Not for Resale

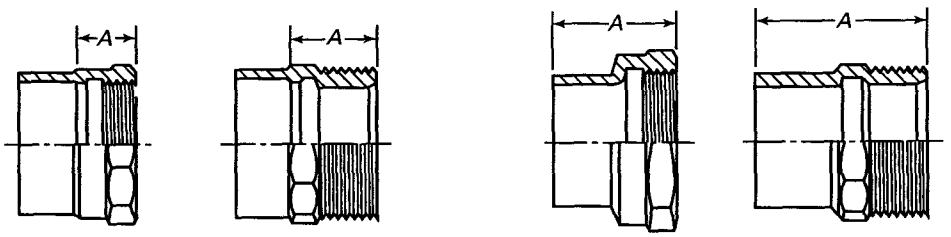

DWV Adapters

TABLE I5 DIMENSIONS OF DWV ADAPTERS

Nominal Size	C × F, *A*	C × M, *A*	FTG × F, *A*	FTG × M, *A*
1¼	0.81	0.94	1.47	1.94
1¼ × 2	0.94	1.31	...	...
1¼ × 1½	0.81	1.12	...	...
1½	0.81	0.94	1.53	2.06
1½ × 2	0.88	1.25	...	...
1½ × 1¼	0.81	1.06	...	...
2	0.88	0.94	1.63	2.38
2 × 3	1.88	...	...	...
2 × 1½	0.88	1.06	...	...
2 × 1¼	0.88	1.06	...	...
3	1.50	1.56	2.38	3.00
3 × 4	2.25	...	...	...
3 × 2	1.56	1.44	...	...
4	1.66	1.62	2.81	3.62
4 × 3	1.69	...	...	...
5	1.94	1.75	...	...
6	2.19	2.00	3.81	...
8	2.62	3.38	4.38	...

GENERAL NOTE: Dimensions are in inches.

Copyright ASME International
Provided by IHS under license with ASME
No reproduction or networking permitted without license from IHS
Not for Resale

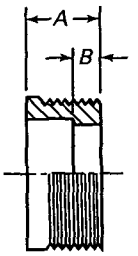

C × M
DWV Short Adapters

TABLE I6 DIMENSIONS OF DWV SHORT ADAPTERS

	C × M	
Nominal Size	*A*	*B*
1¼	1.00	0.50
1½	1.00	0.44
1¼ × 1½	1.00	0.50
2	1.12	0.50
1½ × 2	1.19	0.62

GENERAL NOTE: Dimensions are in inches.

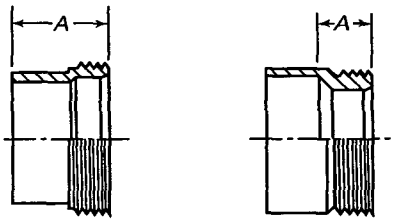

FTG × SJ C × SJ
DWV Trap Adapters

TABLE I7 DIMENSIONS OF DWV TRAP ADAPTERS

Nominal Size	FTG × SJ, *A*	C × SJ, *A*
1¼	1.19	0.62
1½	1.25	0.69
1½ × 1¼	...	0.69
2	...	0.69
2 × 1½	...	0.69

GENERAL NOTES:
(a) Dimensions are in inches.
(b) For dimensions of slip joint ends, see Table I49.

Copyright ASME International
Provided by IHS under license with ASME
No reproduction or networking permitted without license from IHS
Not for Resale

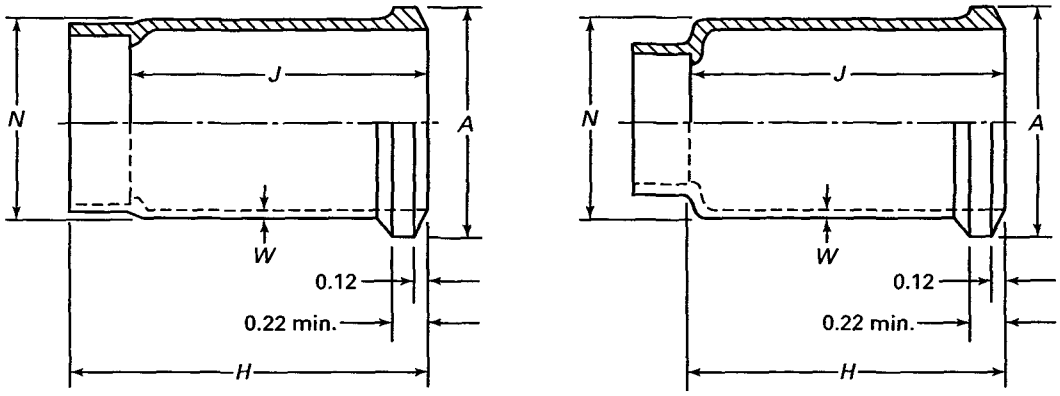

DWV Soil Pipe Adapter — C × Spigot

TABLE I8 DIMENSIONS OF C TO SOIL PIPE ADAPTER FOR JOINING TO EXTRA HEAVY SOIL PIPE

Nominal Size Soil Pipe, C × Spigot [Note (1)]	Diameter of Bead, A		Body Wall, W	Body Outside Diameter, [Note (2)] N ±0.09	Body Length [Note (3)] H ±0.06	Laying Length, J
	Max.	Min.				
2 × 2	2.75	2.69	0.10	2.38	2.50	2.50
1½ × 2	2.75	2.69	0.10	2.38	3.25	2.31
1¼ × 2	2.75	2.69	0.10	2.38	3.25	3.31
3 × 3	3.88	3.81	0.12	3.50	2.75	2.75
2 × 3	3.88	3.81	0.12	3.50	3.50	3.56
1½ × 3	3.88	3.81	0.12	3.50	3.50	3.56
4 × 4	4.88	4.81	0.12	4.50	3.00	3.00
3 × 4	4.88	4.81	0.12	4.50	3.75	3.81
2 × 4	4.88	4.81	0.12	4.50	3.75	3.88
1½ × 4	4.88	4.81	0.12	4.50	3.75	3.88
5 × 5	5.88	5.81	0.19	5.50	3.00	3.00
6 × 6	6.88	6.81	0.22	6.50	3.00	3.00

GENERAL NOTE: Dimensions are taken in inches.

NOTES:

(1) Dimensions given are for extra heavy weight soil pipe. Refer to ASTM A 74. For service weight, *A* and *N* may be reduced as shown in Table 2 of ASTM A 74. Service weight adapters should be marked "SW" or "SERVICE WEIGHT."

(2) *N* is taken from outside diameter of XH soil pipe.

(3) *H* body lengths are based on "telescoping lengths of XH soil pipe hubs."

Copyright ASME International
Provided by IHS under license with ASME
No reproduction or networking permitted without license from IHS
Not for Resale

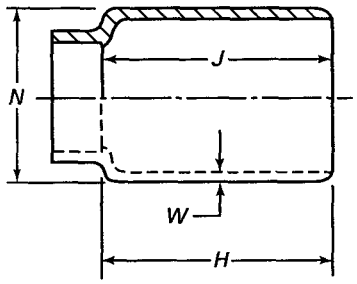

C × Soil Pipe
DWV Soil Pipe Adapters — Plain End
[Note (1)]

TABLE I9 DIMENSIONS OF C TO SOIL PIPE ADAPTER — PLAIN END FOR JOINING TO EXTRA HEAVY SOIL PIPE

Nominal Size	Body Length, *H* ±0.06	Body Outside Diameter, *N* ±0.09	Body Wall, *W*	Laying Length, *J*
2 × 2	2.50	2.38	0.10	2.50
1¼ × 2	2.50	2.38	0.10	2.56
1½ × 2	2.50	2.38	0.10	2.56
3 × 3	2.75	3.50	0.12	2.75
2 × 3	2.75	3.50	0.12	2.81
3 × 4	3.00	4.50	0.12	3.06

GENERAL NOTE: Dimensions are in inches.
NOTE:
(1) For use with elastomer gasket.

Copyright ASME International
Provided by IHS under license with ASME
No reproduction or networking permitted without license from IHS
Not for Resale

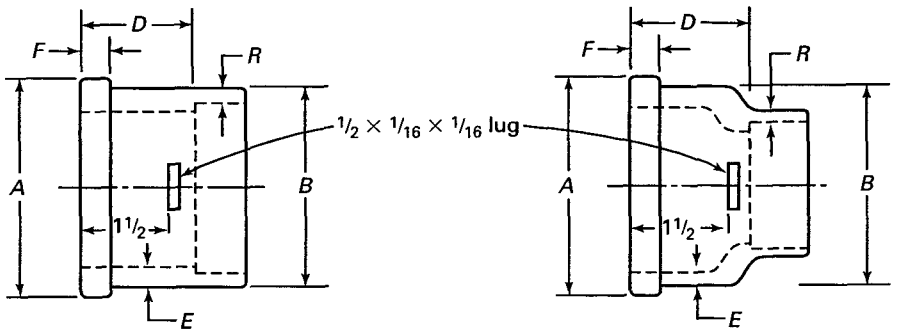

Straight Sizes Reducing Sizes

DWV Soil Pipe Adapter — C × No-Hub
[Note (1)]

TABLE I10 DIMENSIONS OF C × NO-HUB SOIL PIPE ADAPTER

Nominal Size C × No-Hub	Diameter of Bead, *A* ±0.06	Outside Diameter of Body, *B*± 0.06	Laying Length, *D*	Metal Thickness [Note (2)]		Width Bead, Min. *F* +0.13 −0.00
				Body, *E*	Joint, *R*	
2	2.38	2.31	1.22	0.100	0.090	0.25
1½ × 2	2.38	2.31	1.25	0.100	0.078	0.25
1¼ × 2	2.38	2.31	1.28	0.100	0.072	0.25
3	3.41	3.34	1.22	0.120	0.103	0.25
2 × 3	3.41	3.34	1.25	0.120	0.090	0.25
1½ × 3	3.41	3.34	1.28	0.120	0.078	0.25
4	4.44	4.38	1.22	0.120	0.120	0.31
3 × 4	4.44	4.38	1.25	0.120	0.103	0.31

GENERAL NOTE: Dimensions are in inches.

NOTES:
(1) For use with stainless steel clamp and elastomer gasket.
(2) For metal thickness tolerance, see Section 8.

Copyright ASME International
Provided by IHS under license with ASME
No reproduction or networking permitted without license from IHS
Not for Resale

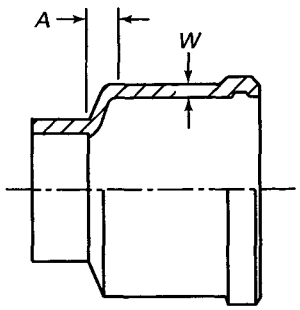

DWV Soil Pipe Adapter
C × Hub

TABLE I11 DIMENSIONS OF C × HUB SOIL PIPE ADAPTER

Nominal Size	*A*	*W*
3	0.38	0.12
3 × 4	0.44	0.12
4	0.19	0.12

GENERAL NOTES:
(a) Dimensions are in inches.
(b) For hub dimensions, see ASTM A 74.

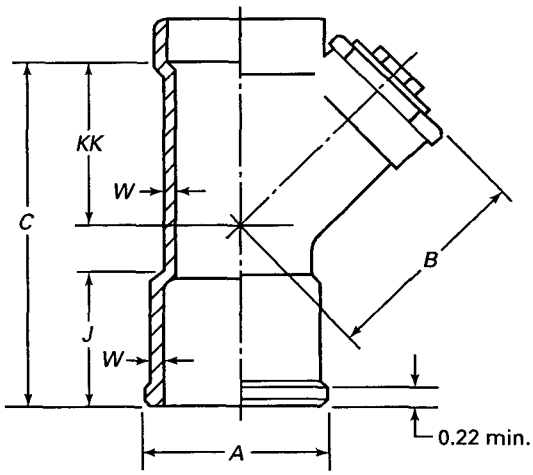

DWV 45 deg Y With Cleanout

TABLE I12 DIMENSIONS OF DWV 45 deg Y WITH CLEANOUT — SOIL PIPE (SPIGOT) × C × CLEANOUT

Nominal Size	*A*		Min., *B*	*C*	*J*	*KK*	*W*
	Max.	Min.					
4 × 3 × 3	4.83	4.81	5.12	8.50	3.00	4.12	0.12

GENERAL NOTE: Dimensions are in inches.

Copyright ASME International
Provided by IHS under license with ASME
No reproduction or networking permitted without license from IHS
Not for Resale

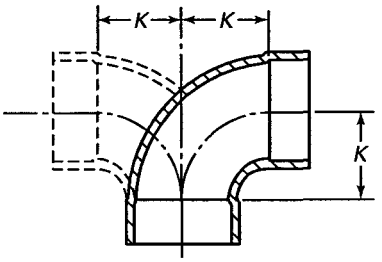

DWV 90 deg Elbow
C × C and C × C × C

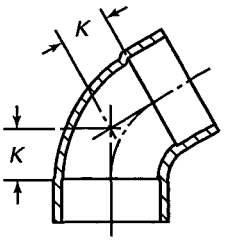

DWV 60 deg Elbow
C × C

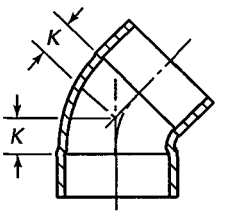

DWV 45 deg Elbow
C × C

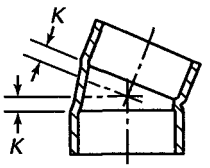

DWV $22\frac{1}{2}$ deg Elbow
C × C

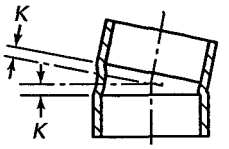

DWV $11\frac{1}{4}$ deg Elbow
C × C

TABLE I13 DIMENSIONS OF DWV ELBOWS AND DOUBLE ELBOWS — C × C

Angle	Dimension	Nominal Size							
		$1\frac{1}{4}$	$1\frac{1}{2}$	2	3	4	5	6	8
DWV 90 deg elbow, C × C	*K*	1.19	1.44	1.94	2.94	3.88	4.88	5.81	7.81
DWV 60 deg elbow, C × C	*K*	0.69	0.81	1.12	1.69	2.25	2.88	3.50	4.62
DWV 45 deg elbow, C × C	*K*	0.50	0.56	0.81	1.19	1.62	2.06	2.50	3.31
DWV $22\frac{1}{2}$ deg elbow, C × C	*K*	0.19	0.25	0.38	0.56	0.75	0.94	1.12	1.50
DWV $11\frac{1}{4}$ deg elbow, C × C	*K*	0.12	0.12	0.19	0.25	0.31	0.41	0.50	0.66

GENERAL NOTE: Dimensions are in inches.

Copyright ASME International
Provided by IHS under license with ASME
No reproduction or networking permitted without license from IHS
Not for Resale

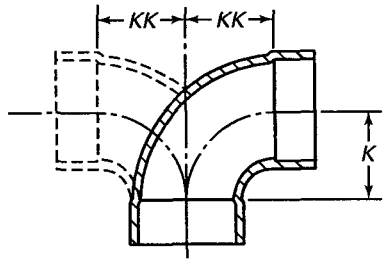

DWV 90 deg Elbow, C × C
DWV Double Elbow, C × C × C

TABLE I14 DIMENSIONS OF REDUCING DWV SINGLE AND DOUBLE ELBOWS — C × C

		Nominal Size C × C or C × C × C			
Angle	Dimension	1½ × 1¼	2 × 1½	2 × 1¼	4 × 3
DWV 90 deg reducing elbow, C × C	*K*	1.19	1.44	1.19	2.81
	KK	1.31	1.69	1.56	3.00

GENERAL NOTE: Dimensions are in inches.

Copyright ASME International
Provided by IHS under license with ASME
No reproduction or networking permitted without license from IHS
Not for Resale

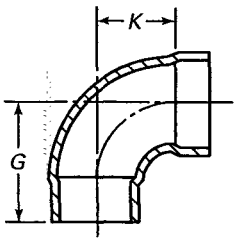

DWV 90 deg Elbow
FTG × C

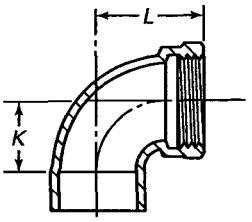

DWV 90 deg Elbow
C × F

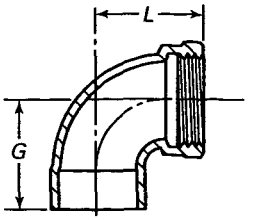

DWV 90 deg Elbow
FTG × F

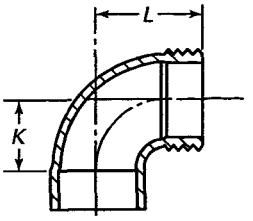

DWV 90 deg Elbow
C × M

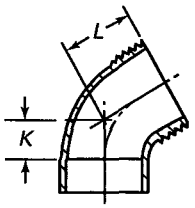

DWV 60 deg Elbow
C × M

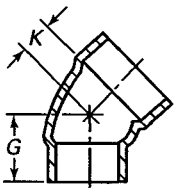

DWV 45 deg Elbow
FTG × C

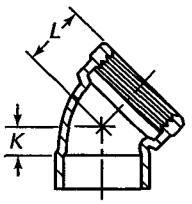

DWV 45 deg Elbow
C × F

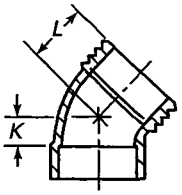

DWV 45 deg Elbow
C × M

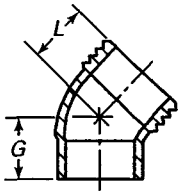

DWV 45 deg Elbow
FTG × M

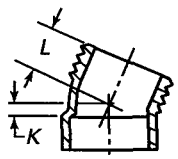

DWV 22$^{1}/_{2}$ deg Elbow
C × M

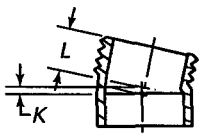

DWV 11$^{1}/_{4}$ deg Elbow
C × M

TABLE I15 DIMENSIONS OF DWV ELBOWS

Angle	Dimensions	Nominal Size				
		1¼	1½	2	3	4
DWV 90 deg elbow, FTG × C	*K*	1.19	1.44	1.94	2.94	3.88
	G	1.75	2.12	2.69	3.75	4.88
DWV 90 deg elbow, C × F	*K*	1.19	1.44	1.94	2.94	3.88
	L	1.88	2.12	2.69	3.94	4.94
DWV 90 deg elbow, FTG × F	*G*	1.75	2.06	2.69	3.75	4.81
	L	1.88	2.12	2.69	3.94	5.00
DWV 90 deg elbow, C × M	*K*	1.19	1.44	1.94	2.94	3.88
	L	1.88	2.12	2.81	3.94	4.94
DWV 45 deg elbow, FTG × C	*K*	0.50	0.56	0.81	1.19	1.62
	G	1.06	1.19	1.50	2.00	2.69

GENERAL NOTES:
(a) Dimensions are in inches.
(b) See Table I16 for reducing sizes.
(c) See Table I17 for continuation of dimensions.

Copyright ASME International
Provided by IHS under license with ASME
No reproduction or networking permitted without license from IHS
Not for Resale

TABLE I16 DIMENSIONS OF DWV REDUCING ELBOWS

Nominal Size	DWV 90 deg Elbow, C × F		DWV 90 deg Elbow, C × M	
	K	*L*	*K*	*L*
1½ × 1¼	1.31	2.00	1.31	1.88

GENERAL NOTES:
(a) Dimensions are in inches.
(b) Refer to illustrations for Table I15.

TABLE I17 DIMENSIONS OF DWV ELBOWS

Angle	Dimensions	Nominal Size		
		1¼	1½	2
DWV 60 deg elbow, C × M	*K*	0.66	0.81	1.09
	L	1.28	1.50	1.84
DWV 45 deg elbow, C × F	*K*	0.30	0.36	0.75
	L	1.28	1.38	1.66
DWV 45 deg elbow, C × M	*K*	0.50	0.56	0.75
	L	1.19	1.31	1.33
DWV 45 deg elbow, FTG × M	*L*	1.06	1.25	1.33
	G	1.03	1.19	1.30
DWV 22½ deg elbow, C × M	*K*	0.19	0.25	0.34
	L	0.81	0.94	1.09
DWV 11¼ deg elbow, C × M	*K*	0.12	0.12	0.19
	L	0.75	0.81	0.94

GENERAL NOTES:
(a) Dimensions are in inches.
(b) Refer to illustrations for Table I15.

Copyright ASME International
Provided by IHS under license with ASME
No reproduction or networking permitted without license from IHS
Not for Resale

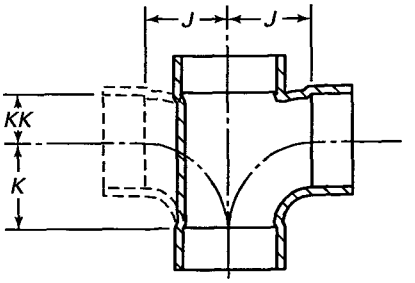

DWV Tees
C × C × C
C × C × C × C

TABLE I18 DIMENSIONS OF DWV TEES AND DOUBLE TEES

Nominal Size	J	K	KK
1¼	1.19	1.19	0.69
1½	1.44	1.44	0.81
1½ × 1½ × 1¼	1.31	1.19	0.69
1½ × 1¼ × 1½	1.44	1.44	0.81
1½ × 1¼ × 1¼	1.31	1.19	0.75
2	1.94	1.94	1.00
2 × 2 × 1½	1.69	1.44	0.81
2 × 2 × 1¼	1.56	1.19	0.69
2 × 1½ × 2	1.94	1.94	1.00
2 × 1½ × 1½	1.69	1.44	0.81
2 × 1½ × 1¼	1.69	1.44	0.75
3	2.94	2.94	1.50
3 × 3 × 2	2.44	1.94	1.00
3 × 3 × 1½	2.19	1.44	0.81
3 × 3 × 1¼	2.06	1.19	0.69
3 × 2 × 3	2.94	2.94	1.28
3 × 2 × 2	2.44	1.94	0.97
3 × 2 × 1½	2.81	1.44	0.84
3 × 1½ × 3	2.94	2.94	1.25
3 × 1½ × 1½	2.19	1.44	0.69
4	3.88	3.88	2.06
4 × 4 × 3	3.44	2.94	1.50
4 × 4 × 2	2.88	1.94	1.00
4 × 4 × 1½	2.62	1.44	0.81
4 × 4 × 1¼	2.150	1.19	0.69
4 × 2 × 4	3.88	3.88	1.25
5	4.88	4.88	2.31
5 × 5 × 4	4.38	3.88	1.94
6	5.81	5.81	2.75
6 × 6 × 4	4.88	3.88	1.94
6 × 4 × 4	4.81	3.88	1.50
8	7.81	7.81	3.44
8 × 8 × 6	6.69	5.81	2.69
8 × 6 × 6	6.75	5.81	2.31

GENERAL NOTE: Dimensions are in inches.

Copyright ASME International
Provided by IHS under license with ASME
No reproduction or networking permitted without license from IHS
Not for Resale

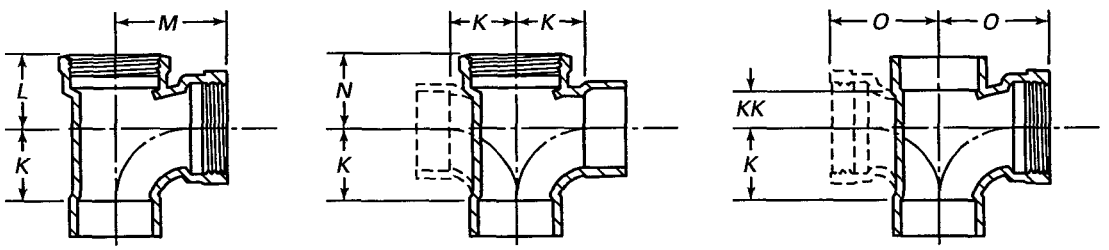

C × F × F

C × F × C
C × F × C × C

C × C × F
C × C × F × F

DWV Tees and Double Tees

TABLE I19 DIMENSIONS OF DWV TEES AND DOUBLE TEES

Nominal Size	K	L	M	N	O	KK
1¼	1.19	1.38	1.88	1.38	1.88	0.69
1½	1.44	1.56	2.19	1.50	2.12	0.81
1½ × 1½ × 1¼	1.19	1.56	2.19	...	2.00	0.69
1½ × 1¼ × 1½	1.44	1.56	2.19	...	2.12	0.81
2	1.94	1.75	2.69	1.75	2.69	1.00
2 × 2 × 1½	1.44	1.75	2.38	...	2.38	0.81
2 × 2 × 1¼	1.19	1.75	2.25	...	2.25	0.69
2 × 1½ × 1½	1.44	1.56	2.38	...	2.38	0.88
2 × 1½ × 2	1.94	...	...	1.75	...	...
3	2.94	2.69	3.94	2.50	3.94	1.50
3 × 3 × 2	1.94	...	...	...	3.19	1.00
3 × 3 × 1½	1.44	...	...	...	2.88	0.81
3 × 3 × 1¼	1.19	...	...	...	2.75	0.69
4	3.88	3.31	4.94	3.31	4.94	1.94
4 × 4 × 3	2.94	...	...	...	4.44	1.50
4 × 4 × 2	1.94	...	...	...	3.62	1.00
4 × 4 × 1½	1.44	...	...	...	3.31	0.81
4 × 4 × 1¼	1.19	...	...	...	3.19	0.69

GENERAL NOTE: Dimensions are in inches.

Copyright ASME International
Provided by IHS under license with ASME
No reproduction or networking permitted without license from IHS
Not for Resale

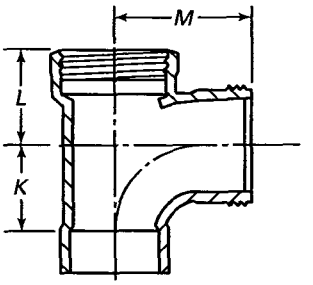

DWV Trap Tees
C × F × SJ

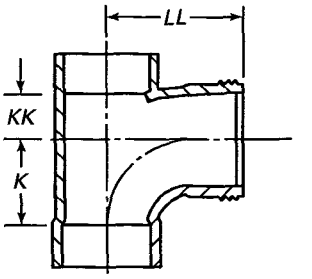

DWV Trap Tees
C × C × SJ

TABLE I20 DIMENSIONS OF DWV TRAP TEES

Nominal Size	K	L	M	KK	LL
1¼	1.19	1.38	2.00	0.75	1.94
1½	1.44	1.56	2.31	0.81	2.25
1½ × 1½ × 1¼	1.19	1.56	2.19	0.75	2.12
2	1.94	1.75	2.78	1.12	2.62

GENERAL NOTES:
(a) Dimensions are in inches.
(b) For dimensions of slip joint ends, see Table I49.

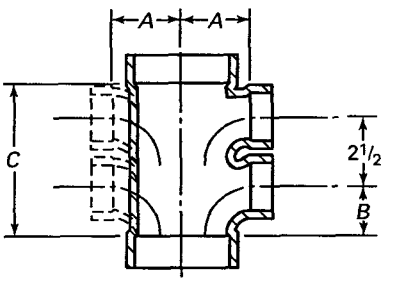

C × C × C × C
C × C × C × C × C × C
DWV Branch Fittings

TABLE I21 DIMENSIONS OF DWV DOUBLE AND QUADRUPLE BRANCH FITTINGS

Nominal Size	A	B	C
3 × 3 with 1½ in. inlets	2.19	1.56	4.94
3 × 3 with 1¼ in. inlets	2.06	1.56	4.94
4 × 4 with 1½ in. inlets	2.62	1.44	4.44
4 × 4 with 1¼ in. inlets	2.50	1.44	4.44

GENERAL NOTE: Dimensions are in inches.

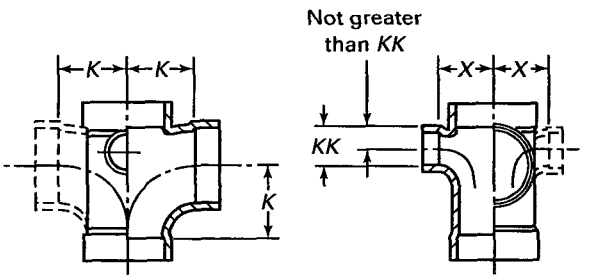

C × C × C With One or Two C Side Inlet(s)
C × C × C × C With One or Two C Side Inlet(s)
MWV Tees — Short Design

TABLE I22 DIMENSIONS OF SHORT DESIGN DWV TEES WITH SIDE INLET(S) (90 deg TO MAIN INLET), SINGLE AND DOUBLE

Nominal Sizes	K	KK	X
3 × 3 × 3 with 2 in. inlet(s)	2.94	1.50	2.25
3 × 3 × 3 with 1½ in. inlet(s)	2.94	1.50	2.12

GENERAL NOTES:
(a) Dimensions are in inches.
(b) To determine whether inlets are right hand or left hand, place the fitting with large side inlet facing toward you. The side on which the other inlet appears determines its designation.

Copyright ASME International
Provided by IHS under license with ASME
No reproduction or networking permitted without license from IHS
Not for Resale

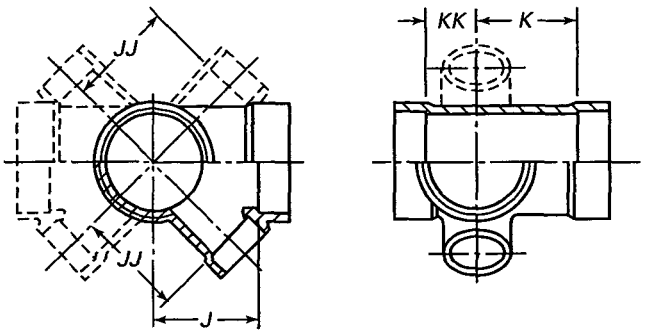

C × C × C With One or Two C Side Inlet(s)
DWV Tees — Short Design

TABLE I23 DIMENSIONS OF SHORT DESIGN DWV TEES WITH SIDE INLET(S) (45 deg TO MAIN INLET), SINGLE AND DOUBLE

Nominal Size	*K*	*KK*	*J*	*JJ*
3 × 3 × 3 with 2 in. inlet(s)	2.94	1.56	3.06	3.38
3 × 3 × 3 with 1½ in. inlet(s)	2.94	1.56	3.06	3.12

GENERAL NOTES:
(a) Dimensions are in inches.
(b) To determine whether inlets are right hand or left hand, place the fitting with large side inlet facing toward you. The side on which the other inlet appears determines its designation.

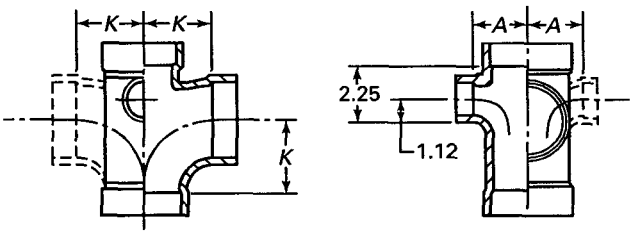

C × C × C With One or Two C Side Inlet(s)
C × C × C × C With One or Two C Side Inlet(s)
DWV Tees — Long Design

TABLE I24 DIMENSIONS OF LONG DESIGN DWV TEES WITH SIDE INLET(S) (90 deg TO MAIN INLET), SINGLE AND DOUBLE

Nominal Size	*A*	*K*
3 × 3 × 3 with 2 in. inlet(s)	2.44	2.94
3 × 3 × 3 with 1½ in. inlet(s)	2.19	2.94
3 × 3 × 3 with 1¼ in. inlet(s)	2.06	2.94
4 × 4 × 4 with 2 in. inlet(s)	2.88	3.88
4 × 4 × 4 with 1½ in. inlet(s)	2.62	3.88

GENERAL NOTES:
(a) Dimensions are in inches.
(b) To determine whether inlets are right hand or left hand, place the fitting with large side inlet facing toward you. The side on which the other inlet appears determines its designation.

Copyright ASME International
Provided by IHS under license with ASME
No reproduction or networking permitted without license from IHS
Not for Resale

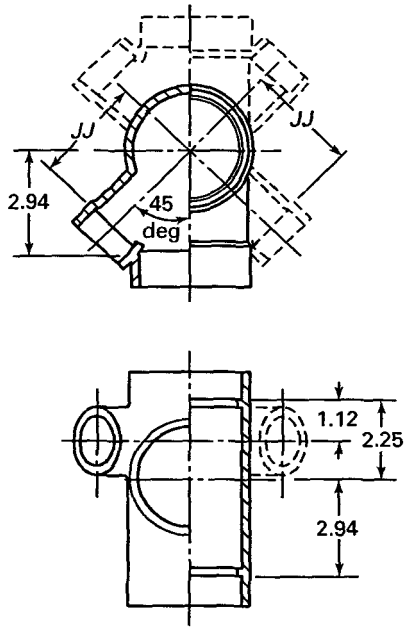

C × C × C With One or Two C Side Inlet(s)
C × C × C × C With One or Two C Side Inlet(s)
DWV Tees — Long Design

TABLE I25 DIMENSIONS OF LONG DESIGN DWV TEES WITH SIDE INLET(S) (45 deg TO MAIN INLET), SINGLE AND DOUBLE

Nominal Sizes	*JJ*
3 × 3 × 3 with 2 in. inlet(s)	3.50
3 × 3 × 3 with 1½ in. inlet(s)	3.19

GENERAL NOTES:
(a) Dimensions are in inches.
(b) To determine whether inlets are right hand or left hand, place the fitting with large side inlet facing toward you. The side on which the other inlet appears determines its designation.

Copyright ASME International
Provided by IHS under license with ASME
No reproduction or networking permitted without license from IHS
Not for Resale

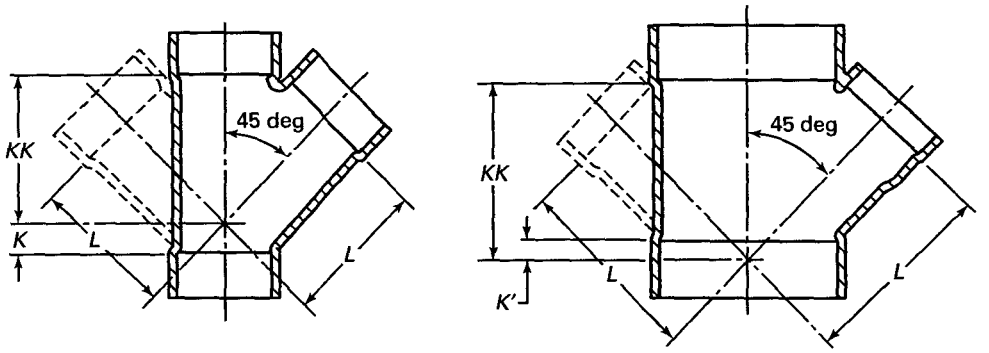

C × C × C
C × C × C × C
DWV 45 deg Ys

TABLE I26 DIMENSIONS OF SINGLE AND DOUBLE DWV 45 deg Ys

Nominal Size	K	K'	KK	L	Nominal Size	K	K'	KK	L
1¼	0.31	...	1.88	1.88	4	1.06	...	5.38	5.38
1½	0.38	...	2.19	2.19	4 × 4 × 3	0.34	...	4.62	4.75
1½ × 1½ × 1¼	0.25	...	2.00	2.06	4 × 4 × 2	...	0.34	3.88	4.19
1½ × 1¼ × 1½	0.44	...	2.12	2.06	4 × 4 × 1½	...	0.66	3.56	3.94
1½ × 1¼ × 1¼	0.25	...	1.94	1.94	4 × 4 × 1¼	...	0.84	3.38	3.81
2	0.36	...	2.75	2.75	5	1.19	...	6.50	6.50
2 × 2 × 1½	0.22	...	2.50	2.56	5 × 5 × 4	0.56	...	5.75	6.00
2 × 2 × 1¼	0.06	...	2.31	2.44	5 × 5 × 3	...	0.06	5.12	5.53
2 × 1½ × 2	0.53	...	2.62	2.53					
2 × 1½ × 1½	0.28	...	2.19	2.19	6	1.50	...	7.69	7.69
2 × 1¼ × 1¼	0.06	...	2.34	2.56	6 × 6 × 4	0.06	...	6.25	6.69
					6 × 6 × 3	...	0.62	5.62	6.19
3	0.81	...	4.12	4.12	6 × 6 × 2	...	1.25	4.88	5.69
3 × 3 × 2	0.12	...	3.38	3.50	6 × 4 × 4	0.06	...	5.31	5.31
3 × 3 × 1½	...	0.19	3.00	3.25	6 × 4 × 2	...	1.25	3.94	4.31
3 × 3 × 1¼	...	0.38	2.88	3.06					
3 × 2 × 3	0.09	...	2.75	2.75	8	1.38	...	10.19	10.19
3 × 1½ × 3	...	0.38	2.44	2.55	8 × 8 × 6	0.53	...	8.78	9.22
3 × 1½ × 1½	...	0.34	2.19	2.19	8 × 6 × 6	0.53	...	7.75	7.75

GENERAL NOTE: Dimensions are in inches.

Copyright ASME International
Provided by IHS under license with ASME
No reproduction or networking permitted without license from IHS
Not for Resale

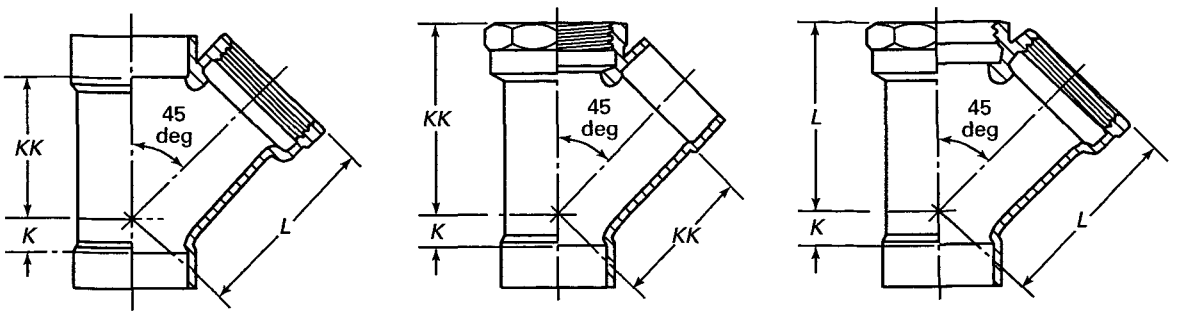

C × C × F C × F × C C × F × F

DWV 45 deg Ys

TABLE I27 DIMENSIONS OF DWV 45 deg Ys

Nominal Size	*K*	*KK*	*L*
1¼	0.31	1.88	2.75
1½	0.38	2.19	3.12
2	0.56	2.75	3.75
2 × 1½ × 2	0.56	2.88	3.75
3	0.81	4.12	5.69
4	1.06	5.38	6.94

GENERAL NOTE: Dimensions are in inches.

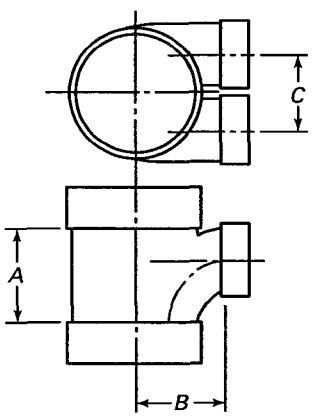

DWV Horizontal Twin Branch Tees
C × C × C × C

TABLE I28 DIMENSIONS FOR DWV HORIZONTAL TWIN BRANCH TEES

Nominal Size	*A*	*B*	Min., *C*
3 × 3 × 1½ × 1½	2.44	2.22	1.88
3 × 3 × 1¼ × 1¼	2.19	2.19	1.83

GENERAL NOTE: Dimensions are in inches.

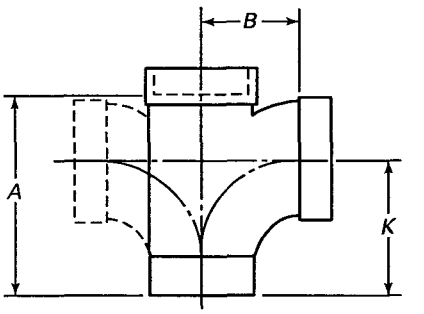

DWV Fitting Tees — Single and Double
FTG × C × C
FTG × C × C × C

TABLE I29 DIMENSIONS FOR DWV FITTING TEES, SINGLE AND DOUBLE

Nominal Size	*A*	*B*	*K*
1½	2.78	1.41	1.97
2	3.45	1.88	2.50
3 × 3 × 2	3.75	2.38	2.62
3 × 3 × 1½	3.19	2.16	2.22
3 × 3 × 1¼	2.72	2.00	1.87
3	5.25	2.88	3.62
3 × 2 × 3	4.94	2.88	3.62

GENERAL NOTE: Dimensions are in inches.

Copyright ASME International
Provided by IHS under license with ASME
No reproduction or networking permitted without license from IHS
Not for Resale

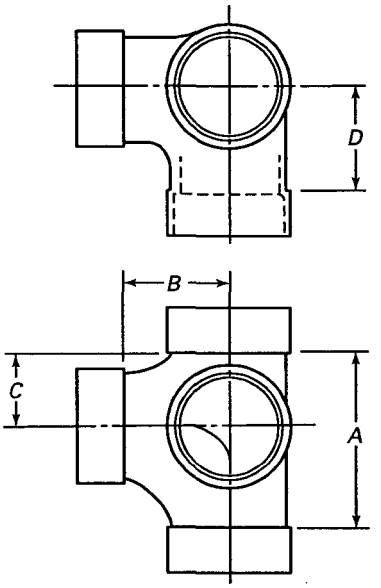

DWV Utility Tees
C × C × C × C

TABLE I30 DIMENSIONS FOR DWV UTILITY TEES

Nominal Size	*A*	*B*	*C*	*D*
1½	2.25	1.44	0.81	1.44
2	3.19	1.94	1.25	1.94
2 × 2 × 1½ × 1½	2.31	1.66	0.88	1.66

GENERAL NOTE: Dimensions are in inches.

Copyright ASME International
Provided by IHS under license with ASME
No reproduction or networking permitted without license from IHS
Not for Resale

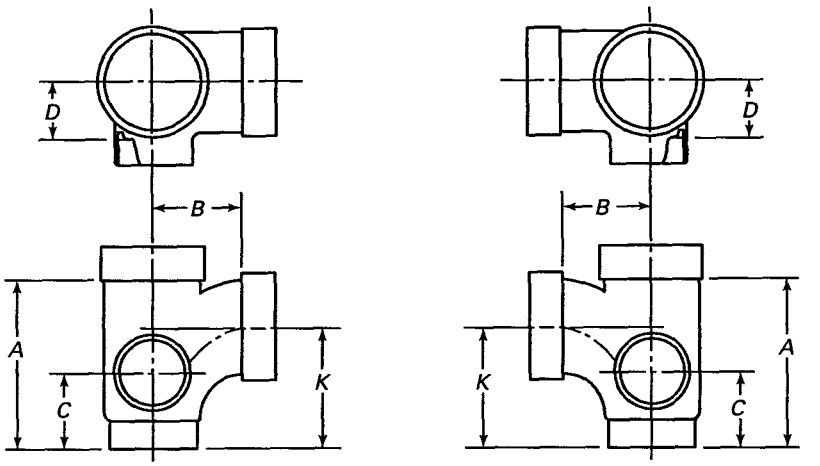

Left Side Inlet
FTG × C × C × C
(a)

Right Side Inlet
FTG × C × C × C
(b)

TABLE I31 DIMENSIONS FOR DWV FITTING TEES WITH SIDE INLET MAXIMUM BELOW CENTER LINE

Nominal Size	*A*	*B*	*C*	*D*	*K*
3 × 3 × 3 × 1½	5.25	2.94	2.16	1.75	3.75
3 × 3 × 3 × 2	5.25	2.94	2.41	1.75	3.75

GENERAL NOTE: Dimensions are in inches.

Copyright ASME International
Provided by IHS under license with ASME
No reproduction or networking permitted without license from IHS
Not for Resale

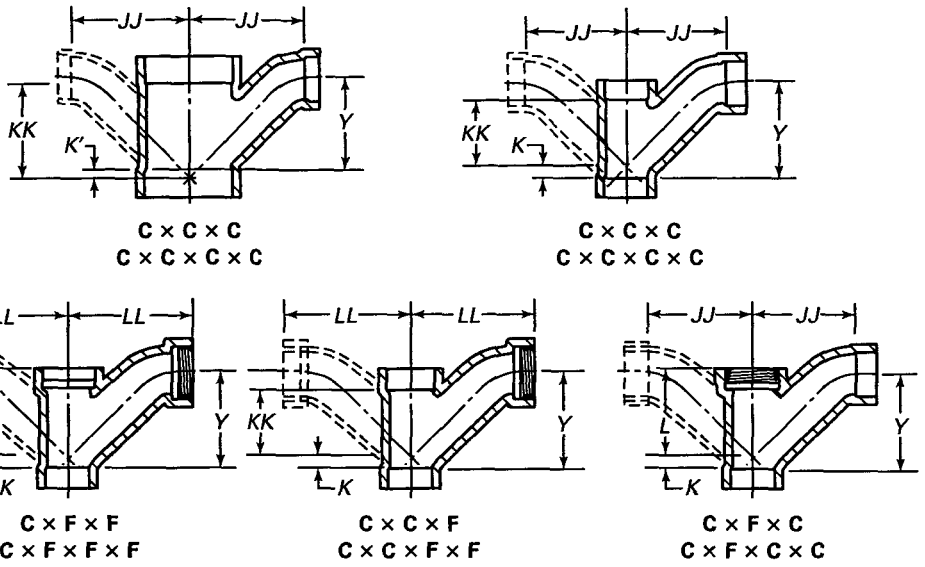

TABLE I32 DIMENSIONS OF DWV LONG TURN T–Ys, SINGLE AND DOUBLE

Nominal Size	JJ	K	K′	KK	L	LL	Y
1¼	2.50	0.31	...	1.75	2.62	3.94	2.50
1½	3.00	0.38	...	2.12	3.12	3.81	3.00
1½ × 1½ × 1¼	2.81	0.19	...	1.94	3.00	3.81	2.62
2	4.00	0.56	...	2.62	3.62	4.81	4.00
2 × 2 × 1½	3.44	0.25	...	2.38	3.38	4.44	3.19
2 × 2 × 1¼	3.00	0.06	...	2.12	...	...	2.69
2 × 1½ × 2	4.00	0.56	...	2.81	...	...	4.00
2 × 1¼ × 2	4.00	0.50	...	2.44	...	...	4.00
3	5.88	0.81	...	3.88	5.44	9.00	5.88
3 × 3 × 2	4.69	0.09	...	3.25	...	...	4.12
3 × 3 × 1½	3.94	...	0.22	2.88	...	...	3.25
3 × 3 × 1¼	3.75	...	0.41	2.78	...	...	2.81
3 × 2 × 3	5.88	0.81	...	3.44	...	...	5.88
3 × 2 × 2	4.50	0.06	...	2.75	...	...	4.00
4	7.75	1.06	...	5.00	6.69	9.00	7.75
4 × 4 × 3	5.62	0.44	...	4.50	...	...	5.12
4 × 4 × 2	5.12	...	0.25	3.88	...	...	4.25
4 × 4 × 1½	4.88	...	0.62	3.47	...	...	3.62
5	9.94	1.25	...	6.50	...	...	9.78
5 × 5 × 4	8.62	0.59	...	5.84	...	...	7.97
5 × 5 × 3	7.25	...	0.06	5.19	...	...	6.16
6	11.81	1.53	...	7.78	...	...	11.62
6 × 6 × 5	10.44	0.88	...	7.09	...	...	9.78
6 × 6 × 4	9.09	0.19	...	6.34	...	...	7.91
6 × 6 × 3	7.69	...	0.50	5.69	...	...	6.12

GENERAL NOTE: Dimensions are in inches.

Copyright ASME International
Provided by IHS under license with ASME
No reproduction or networking permitted without license from IHS
Not for Resale

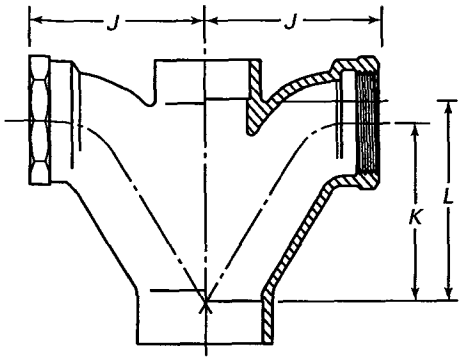

C × C × F × F
DWV Double Short T-Y

TABLE I33 DIMENSIONS OF DWV DOUBLE SHORT T-Y

Nominal Size	J	K	L
2 × 1½ × 1½ × 1½	3.06	3.19	3.25
2 × 2 × 1½ × 1½	3.44	3.62	3.66
2 × 1½ × 2 × 2	3.75	4.19	4.19
2 × 1½ × 1¼ × 1¼	3.06	3.19	3.56

GENERAL NOTE: Dimensions are in inches.

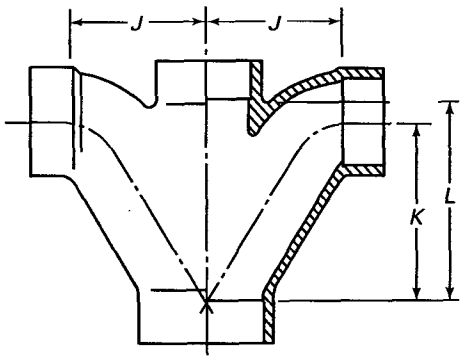

C × C × C × C
DWV Double Short T-Y

TABLE I34 DIMENSIONS OF DWV DOUBLE SHORT T-Y

Nominal Size	J	K	L
1½	2.51	3.26	3.29
2	3.38	4.09	4.00
2 × 2 × 1½ × 1½	2.78	3.62	3.68
2 × 1½ × 2 × 2	3.00	4.19	4.19
2 × 1½ × 1½ × 1½	2.38	3.19	3.25
3	4.44	5.66	5.75

GENERAL NOTE: Dimensions are in inches.

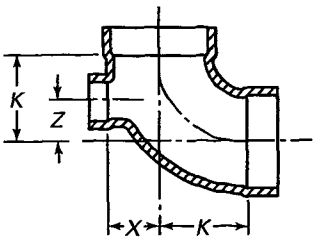

DWV 90 deg Elbow
With High Heel Inlet
C × C × C

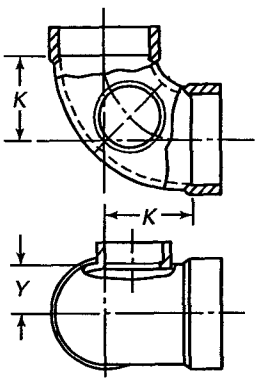

DWV 90 deg Elbow
With Side Inlet
C × C × C

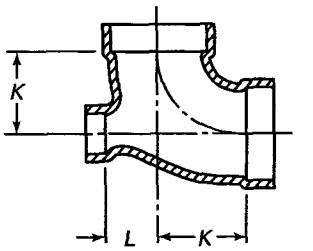

DWV 90 deg Elbow
With Low Heel Inlet
C × C × C

TABLE I35 DIMENSIONS OF DWV ELBOW WITH INLETS

Nominal Size	K	X	Y	Z	L
3 × 3 × 2	2.94	1.69	1.69	1.50	1.28
3 × 3 × 1½	2.94	1.69	1.69	1.50	1.19
3 × 3 × 1¼	2.94	1.69	1.69	1.50	1.12
4 × 4 × 2	3.88	2.12	2.25	2.00	1.88
4 × 4 × 1½	3.88	2.06	2.25	2.00	1.28

GENERAL NOTE: Dimensions are in inches.

Copyright ASME International
Provided by IHS under license with ASME
No reproduction or networking permitted without license from IHS
Not for Resale

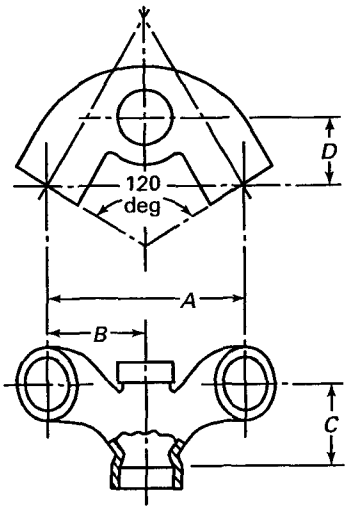

TABLE I36 DIMENSIONS OF DWV DOUBLE BRANCH SINK FITTINGS

Type	Nominal Size	A	B	C	D
C × C × F × F	2 × 1½ × 1½ × 1½	6.25	3.12	2.25	1.88
C × C × C × C	2 × 1½ × 1½ × 1½	6.25	3.12	2.25	1.88

GENERAL NOTE: Dimensions are in inches.

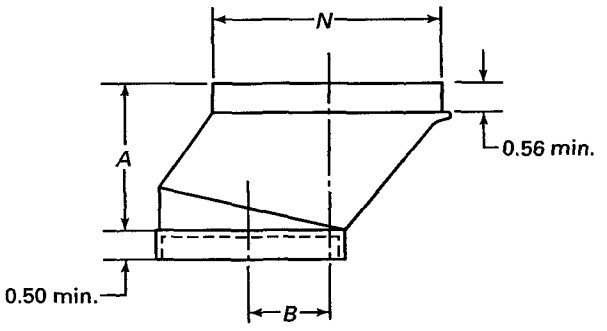

FTG × C

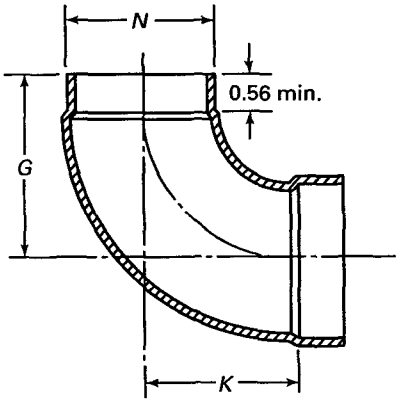

DWV 90 deg Closet Elbow
FTG × C

TABLE I37 DIMENSIONS OF DWV CLOSET OFFSET FITTINGS

			N	
Nominal Size	A	B	Min.	Max.
4	2.50	1.94	4.1215	4.1270
4 × 3	2.50	1.44	4.1215	4.1270

GENERAL NOTE: Dimensions are in inches.

TABLE I38 DIMENSIONS OF DWV 90 deg CLOSET ELBOW

Nominal Size	K	N		G
		Min.	Max.	
4	3.88	4.1215	4.1270	4.44
3	2.94	3.1215	3.1270	3.50
4 × 3	2.88	4.1215	4.1270	3.72

GENERAL NOTE: Dimensions are in inches.

Copyright ASME International
Provided by IHS under license with ASME
No reproduction or networking permitted without license from IHS
Not for Resale

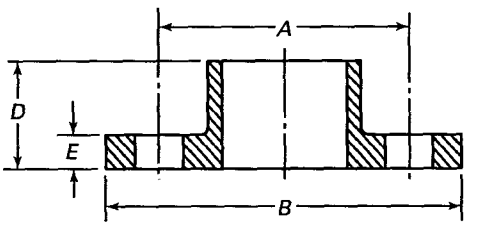

Floor Flange Vent Support
[Note (1)]

TABLE I39 DIMENSIONS OF FLOOR FLANGE VENT SUPPORT

Nominal Size	*A*	*B*	*D*	Min., *E*	Bolt Hole Size	Number of Holes
1¼	2.62	3.06	0.62	0.19	0.22	2
1½	2.62	3.05	0.69	0.19	0.22	2
2	3.38	3.94	0.75	0.19	0.22	2
3	4.50	5.12	0.94	0.19	0.25	2
4	5.50	6.12	1.19	0.19	0.25	2
5	6.94	8.00	1.44	0.38	0.44	4
6	7.88	9.00	1.69	0.50	0.56	4
8	10.00	11.00	2.12	0.62	0.56	4

GENERAL NOTE: Dimensions are in inches.

NOTE:
(1) May be round or oval design.

Copyright ASME International
Provided by IHS under license with ASME
No reproduction or networking permitted without license from IHS
Not for Resale

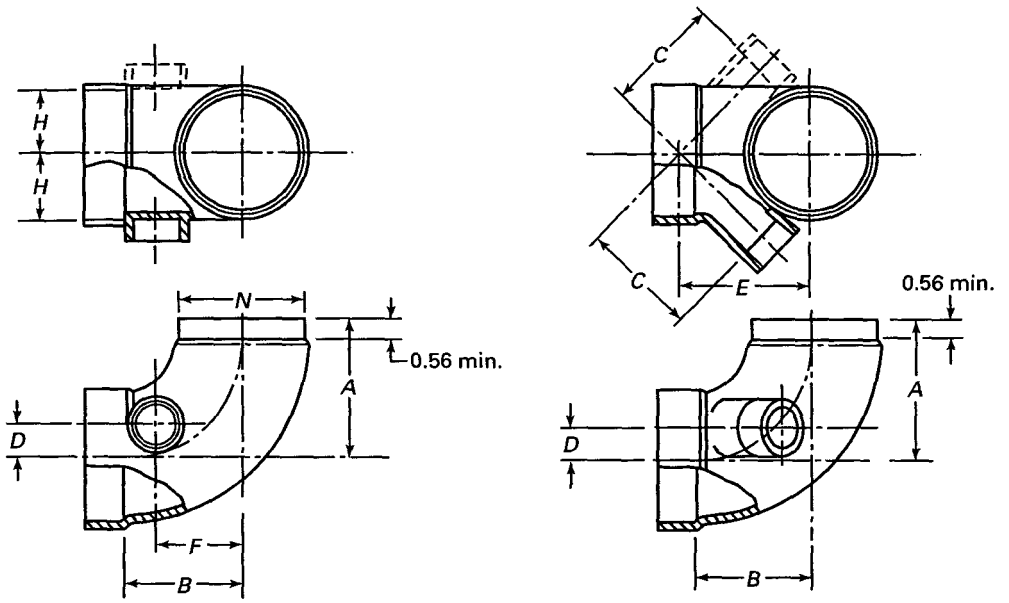

FTG × C With One or Two C Side Inlet(s)
DWV — 90 deg Closet Elbows

TABLE I40 DIMENSIONS OF DWV CLOSET ELLS WITH SIDE INLET(S) (90 deg AND 45 deg) TO MAIN INLET(S)

								N	
Nominal Size	***A***	***B***	***C***	***D***	***E***	***F***	***H***	**Min.**	**Max.**
4 × 3 with 1½ in inlet(s)	4.44	3.88	3.62	0.56	4.03	2.81	1.72	4.123	4.127
4 × 4 with 1½ in inlet(s)	4.44	3.88	3.81	1.00	4.22	2.81	2.09	4.123	4.127

GENERAL NOTES:
(a) Dimensions are in inches.
(b) To determine whether inlets are right hand or left hand, place the fitting with large side inlet up facing toward you. The side on which the other inlet appears determines its designation.

Copyright ASME International
Provided by IHS under license with ASME
No reproduction or networking permitted without license from IHS
Not for Resale

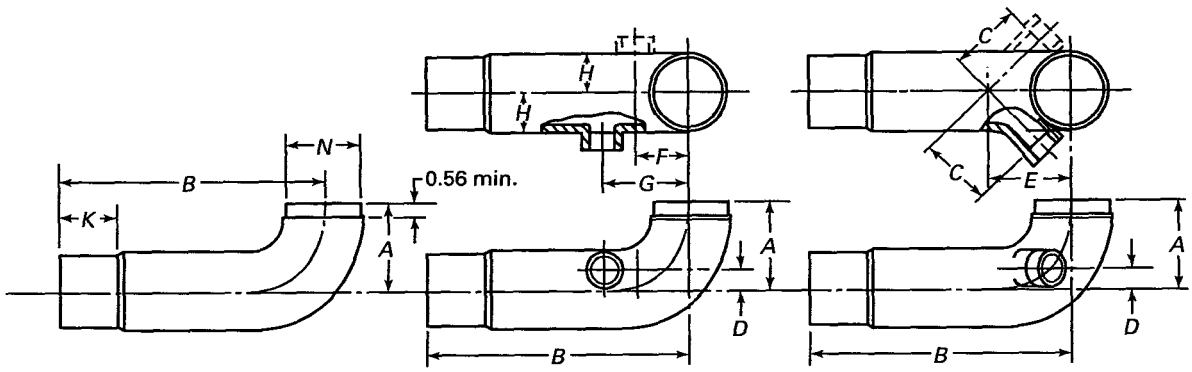

FTG × FTG

FTG × C With One or Two C Side Inlet(s)

DWV — 90 deg Closet Elbows

TABLE I41 DIMENSIONS OF DWV CLOSET ELLS WITH OR WITHOUT SIDE INLET(S) (90 deg AND 45 deg) TO MAIN INLET(S)

Nominal Size	Min., A	B	C	D	E	F	G	H	K	N Min.	N Max.
4 × 3	4.44	14.00	...	...	...	...	...	...	3.18	4.123	...
4 × 3 with 1½ in. inlet(s)	4.44	14.00	3.62	0.56	4.03	2.94	4.69	1.72	3.18	...	4.127
4 × 4	4.44	14.00	...	...	...	...	...	...	3.18	4.123	...
4 × 4 with 1½ in. inlet(s)	4.44	14.00	3.81	1.00	4.22	2.81	4.56	2.09	3.18	...	4.127

GENERAL NOTES:
(a) Dimensions are in inches.
(b) To determine whether inlets are right hand or left hand, place the fitting with large side inlet up facing toward you. The side on which the other inlet appears determines its designation.
(c) Closet flange attaches to 4 in. end.

Copyright ASME International
Provided by IHS under license with ASME
No reproduction or networking permitted without license from IHS
Not for Resale

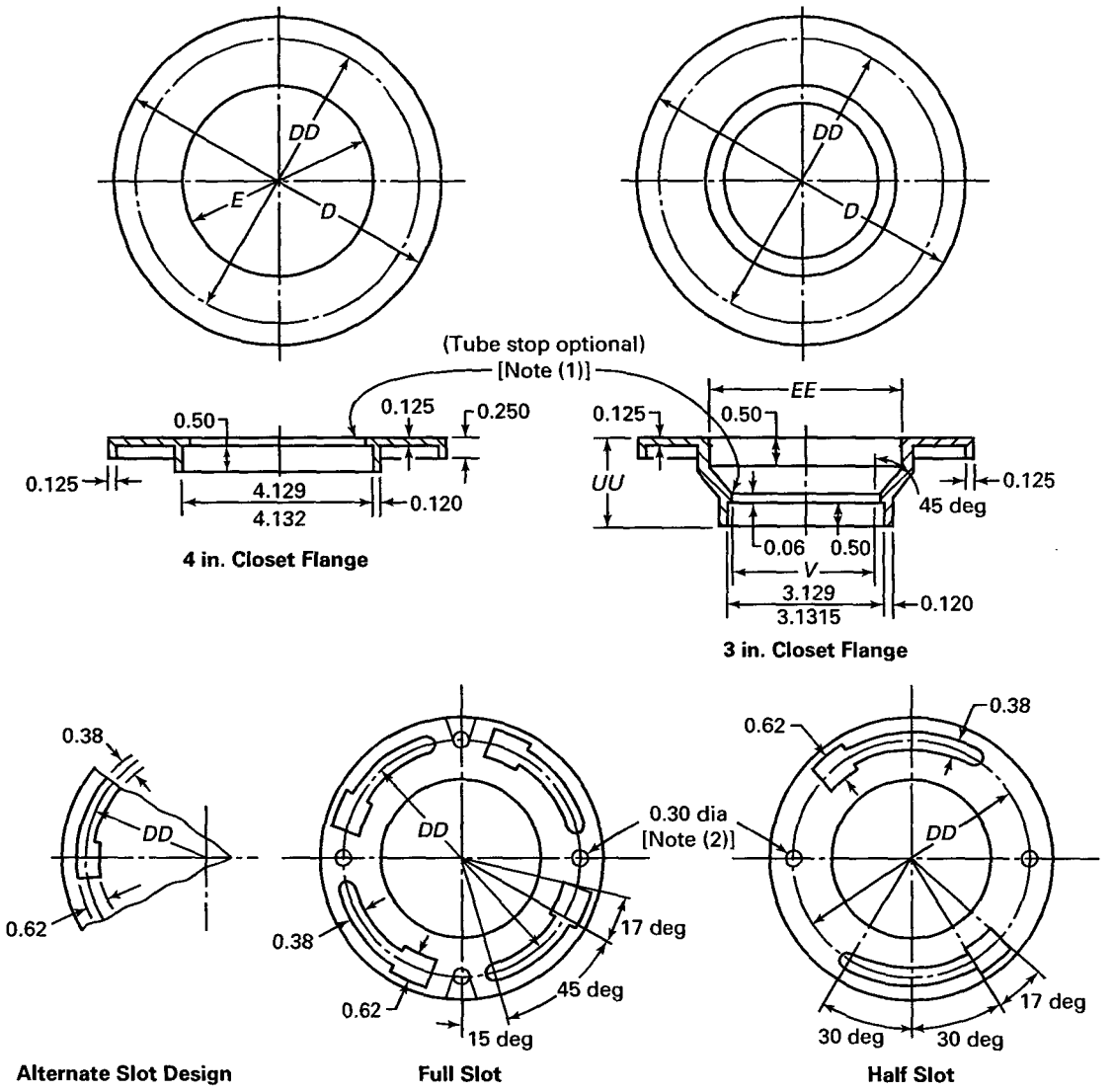

Suggested Slot Arrangements

TABLE I42 DIMENSIONS OF DWV CLOSET FLANGES

D	Outside diameter of flange, max.	7.00
DD	Diameter of center line of slots	6.00
E	Inside diameter of 4 in. flange (if tube stop is used)	3.94
EE	Inside diameter of 3 in. flange	4.12
UU	Length of 3 in. flange	1.69
V	Bore of tube stop in 3 in. flange	2.94

GENERAL NOTE: *Dimensions are in inches.*

NOTES:

(1) 45 deg angle may be extended to face of flange.

(2) Optional:

(a) the addition of 0.30 dia. holes with or without countersink on bolt circle *DD* and/or

(b) two 0.38 wide notches on center line extending from the outer edge of flange.

Copyright ASME International
Provided by IHS under license with ASME
No reproduction or networking permitted without license from IHS
Not for Resale

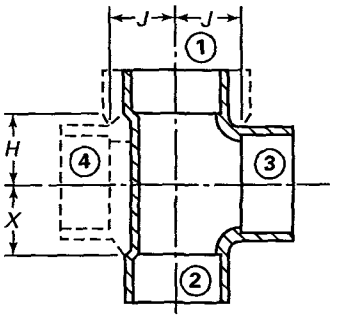

Vent Tees and Vent Double Tees
Vent Increasers With Side Inlets

C* × *C* × *C* and *C* × *C* × *C* × *C

① ② ③ ① ② ③ ④

TABLE I43 DIMENSIONS OF VENT TEES AND VENT DOUBLE TEES

Nominal Size	*H*	*J*	*X*
1¼	0.87	0.87	0.87
1½	1.00	1.00	1.00
1½ × 1½ × 1¼	0.87	1.00	0.87
2	1.25	1.25	1.25
2 × 2 × 1½	1.00	1.25	1.00
2 × 2 × 1¼	0.87	1.25	0.87
3	1.75	1.75	1.75
3 × 3 × 2	1.25	1.75	1.25
3 × 3 × 1½	1.00	1.75	1.00
3 × 3 × 1¼	0.87	1.75	0.87
3 × 4 × 2	1.19	2.19	1.19
3 × 4 × 1½	1.06	2.12	1.00

GENERAL NOTES:
(a) Dimensions are in inches.
(b) Vent fittings are designed for dry vents only. They are not specified for waste lines. Vent fittings must be marked as follows: VENT ONLY.

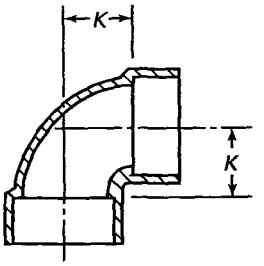

Vent Elbows
C × C

TABLE I44 DIMENSIONS OF VENT ELBOWS

Nominal Size	*K*
1¼	0.87
1½	1.00
2	1.25
3	1.75

GENERAL NOTES:
(a) Dimensions are in inches.
(b) Vent fittings are designed for dry vents only. They are not specified for waste lines. Vent fittings must be marked as follows: VENT ONLY.

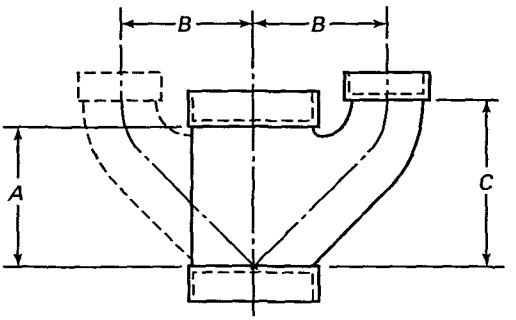

DWV Stack Upturns,
Single and Double
C × C × C and C × C × C × C

TABLE I45 DIMENSIONS OF DWV STACK UPTURNS, SINGLE AND DOUBLE

Nominal Size	*A*	*B*	*C*
2	3.25	3.50	4.72
2 × 2 × 1½	2.56	3.12	3.84
2 × 1½ × 1½	2.38	2.75	3.47
3	5.09	3.75	5.69
3 × 3 × 2	3.44	3.41	4.19
3 × 3 × 1½	2.69	3.16	3.44
4 × 4 × 3	5.03	4.25	5.66

GENERAL NOTE: Dimensions are in inches.

Copyright ASME International
Provided by IHS under license with ASME
No reproduction or networking permitted without license from IHS
Not for Resale

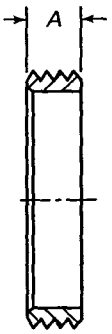

DWV Slip Joint Thread Pieces
C × SJ
[Note (1)]

TABLE I46 DIMENSIONS OF SLIP JOINT PIECES

Nominal Size	*A*
1¼	0.38
1½	0.38
1¼ × 1½	0.38
2	0.38

GENERAL NOTE: Dimensions are in inches.

NOTE:
(1) For slip joint threads, see Table I49.

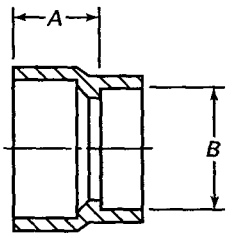

DWV Trap Extended Bushing
FTG × Outside Diameter of Tube (FTG × O.D. Tube)

TABLE I48 DIMENSIONS OF TRAP EXTENDED BUSHINGS

Nominal Size	*A*	*B*
1½ × 1¼ O.D.	0.75	1.25
1½ × 1½ O.D.	0.75	1.50

GENERAL NOTE: Dimensions are in inches.

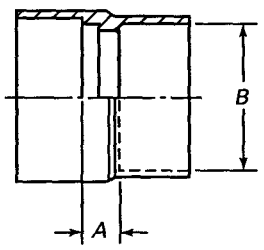

DWV Trap Coupling
C × O.D. Tube

TABLE I47 DIMENSIONS OF TRAP COUPLING

Nominal Size	*A*	*B*
1¼ × 1¼ O.D.	0.13	1.25
1½ × 1½ O.D.	0.22	1.50
1½ × 1¼ O.D.	0.25	1.25
2 × 1½ O.D.	0.41	1.50

GENERAL NOTE: Dimensions are in inches.

Copyright ASME International
Provided by IHS under license with ASME
No reproduction or networking permitted without license from IHS
Not for Resale

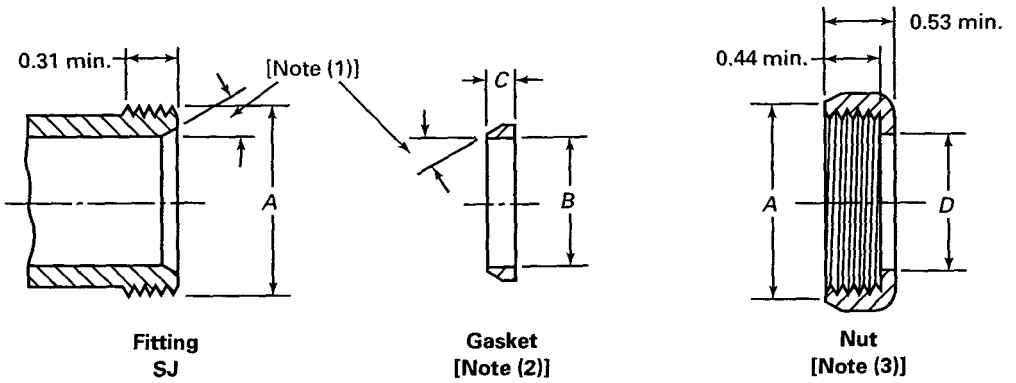

DWV Slip Joint Ends

TABLE I49 DIMENSIONS OF SLIP JOINT ENDS

O.D. Size	*A*	*B*	Min., *C*	*D*
1¼	1¼ NPSM	1.260	0.16	1.28
1½	1½ NPSM	1.510	0.19	1.53
2	2 NPSM	2.010	0.19	2.03

GENERAL NOTE: Dimensions are in inches.

NOTES:
(1) Angles must be equal.
(2) Gasket to be pliable material not subject to aging or drying out.
(3) Nut may be any material specified in Section 7, or any other suitable nonferrous alloy.

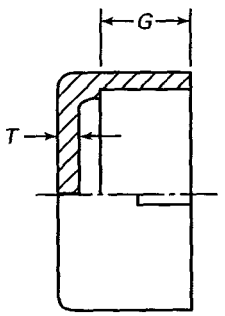

DWV Cap
C

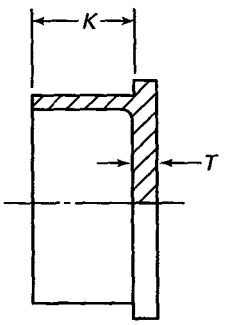

DWV Fitting Plug
FTG

TABLE I50 DIMENSIONS OF DWV CAP

Nominal Size	*G*	*T*
1¼	0.50	0.100
1½	0.56	0.100
2	0.62	0.100
3	0.75	0.120
4	1.00	0.120

GENERAL NOTE: Dimensions are in inches.

TABLE I51 DIMENSIONS OF DWV PLUGS

Nominal Size	*K*	*T*
1¼	0.56	0.100
1½	0.62	0.100
2	0.69	0.100
3	0.81	0.120

GENERAL NOTE: Dimensions are in inches.

Copyright ASME International
Provided by IHS under license with ASME
No reproduction or networking permitted without license from IHS
Not for Resale

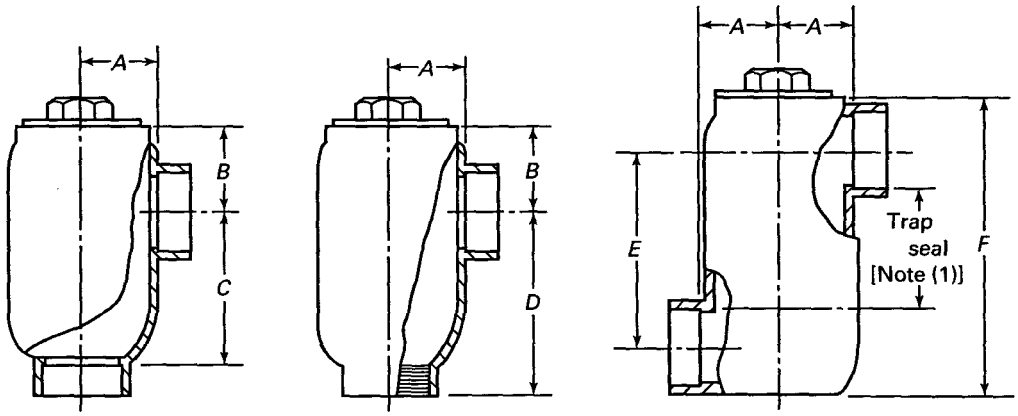

C × C C × F C × C

DWV One Piece Drum Traps

TABLE I52 DIMENSIONS OF DWV DRUM TRAPS

Type	Drum Size	Pipe and Tubing Size	Plug Size	*A*	*B*	*C*	*D*	*E*	Max., *F*
C × C	3 × 5	1½	2	1.50	1.72	2.97	...	...	...
C × F	3 × 5	1½	2	1.50	1.72	...	3.22	...	...
C × C	3 × 6	1½	2	1.50	...	...	...	3.88	6.75
C × F	4 × 5	1½	3	2.00	1.22	...	3.25	...	...
C × C	4 × 5	1½	3	2.00	1.22	...	...	...	...
C × C	4 × 8	1½	3	2.00	...	...	...	4.72	8.00
C × F	4 × 5	1¼	3	2.00	1.22	...	3.25	...	...
C × C	4 × 5	1¼	3	2.00	1.22	...	...	...	...

GENERAL NOTE: Dimensions are in inches.
NOTE:
(1) Trap seal is 2 in. minimum.

Copyright ASME International
Provided by IHS under license with ASME
No reproduction or networking permitted without license from IHS
Not for Resale

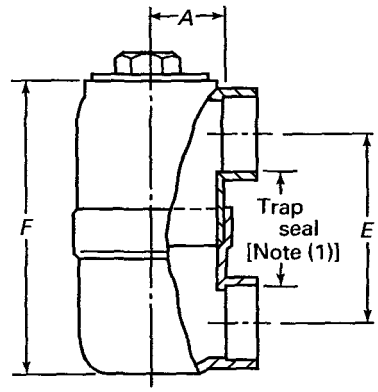

C × C
DWV Swivel Drum Traps

TABLE I53 DIMENSIONS OF DWV SWIVEL DRUM TRAP

Type	Drum Size	Tube Size	Plug Size	*A*	*E*	Max., *F*
C × C	3 × 6	1½	2	1.50	3.88	6.75
C × C	4 × 8	1½	3	2.00	4.72	8.00
C × C	3 × 6	2	2	1.50	3.66	6.66
C × C	4 × 8	2	3	2.00	4.34	7.78

GENERAL NOTE: Dimensions are in inches.
NOTE:
(1) Trap seal is 2 in. minimum.

Copyright ASME International
Provided by IHS under license with ASME
No reproduction or networking permitted without license from IHS
Not for Resale

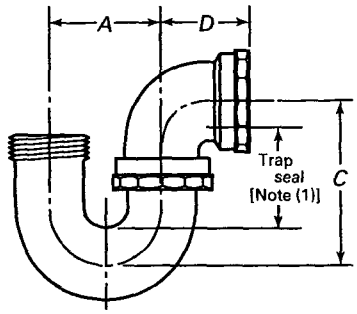

DWV P-Trap With Union Joint
SJ × F

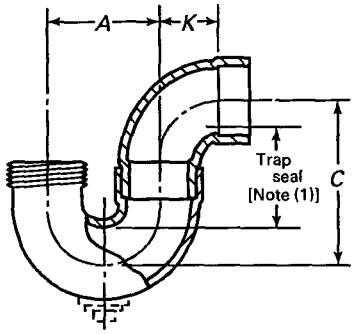

DWV P-Trap With or Without Cleanout
SJ × C

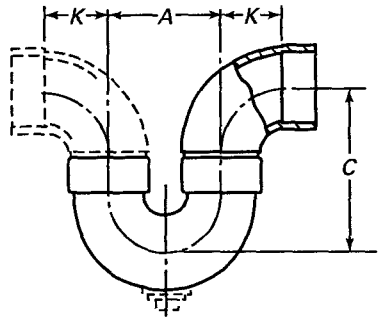

DWV P-Trap or Running Trap With or Without Cleanout
C × C

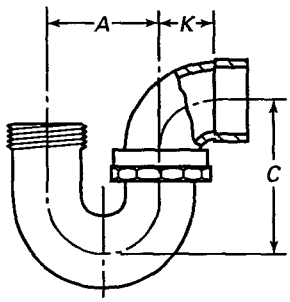

DWV P-Trap With Union Joint
SJ × C

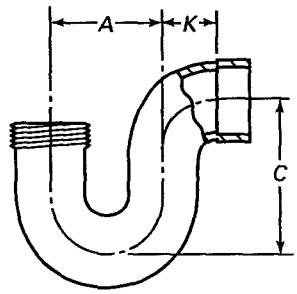

DWV One Piece P-Trap
SJ × C

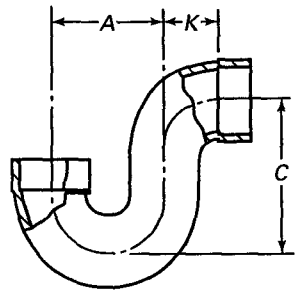

DWV One Piece Line P-Trap
C × C

TABLE I54 DIMENSIONS OF DWV TRAPS

Description	Nominal Size	A	K	Min., C	D
P - Trap SJ × C with or without cleanout	1¼	2.19	1.19	3.28	...
P - Trap C × C with or without cleanout	1½	2.44	1.44	3.53	...
Running P - Trap C × C with or without cleanout	2	2.94	1.94	4.25	...
P - Trap Swivel SJ × C	1¼	2.38	1.12	3.16	1.94
P - Trap Swivel SJ × F	1½	2.62	1.12	3.44	1.94
P - Trap One Piece SC	2	3.12	1.47	3.91	2.81
P - Trap One Piece CC	1½	2.44	1.44	3.53	...

GENERAL NOTE: Dimensions are in inches.

NOTE:

(1) Trap seal is 2 in. minimum (all traps).

Copyright ASME International
Provided by IHS under license with ASME
No reproduction or networking permitted without license from IHS
Not for Resale

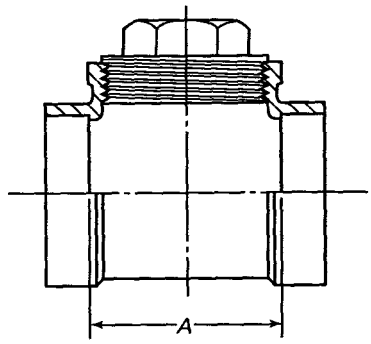

DWV Test Tees With Plug
C × C × F

TABLE I55 DIMENSIONS OF DWV TEST TEES WITH PLUG

Nominal Size	*A*
1¼ × 1¼ × 1¼	2.00
1½ × 1½ × 1½	2.25
2 × 2 ×2	2.75
3 × 3 × 3	3.88
4 × 4 × 4	5.50

GENERAL NOTE: Dimensions are in inches.

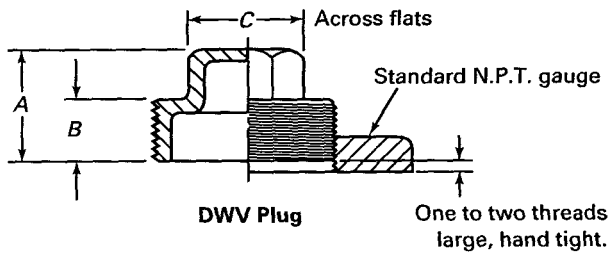

TABLE I56 DIMENSIONS OF DWV PLUGS

Nominal Size	*A*	*B*	*C*
1¼	0.88	0.44	0.88
1½	1.00	0.50	1.00
2	1.09	0.53	1.12
3	1.31	0.62	1.38
4	1.38	0.66	1.38
5	1.44	0.69	1.50
6	1.53	0.72	1.50
8	1.75	0.75	1.75

GENERAL NOTE: Dimensions are in inches.

Copyright ASME International
Provided by IHS under license with ASME
No reproduction or networking permitted without license from IHS
Not for Resale

MANDATORY APPENDIX II
REFERENCES

The following is a list of standards and specifications referenced in this Standard, showing the year of approval.

ASME B1.20.1-1983 (R1992), Pipe Threads, General Purpose (Inch)[1]

ASME B16.12-1998, Cast-Iron Threaded Drainage Fittings[1]

ASME B16.18-2001, Cast Copper Alloy Solder Joint Pressure Fittings[1]

Publisher: The American Society of Mechanical Engineers (ASME International), Three Park Avenue, New York, NY 10016-5990

ASTM A 74-1996, Specification for Cast Iron Soil Pipe and Fittings

ASTM B 62-1993, Specification for Composition Bronze or Ounce Metal Castings

ASTM B 306-1996, Specification for Copper Drainage Tube (DWV)

ASTM B 584-1996, Specification for Copper Alloy Sand Castings for General Applications

Publisher: American Society for Testing and Materials (ASTM), 100 Barr Harbor Drive, West Conshohocken, PA 19428-2959

ISO 9000-1: 1994, Quality management and quality assurance standards — Part 1: Guidelines for selection and use

ISO 9000-2: 1997, Quality management and quality assurance standards — Part 2: Generic guidelines for the application of ISO 9000, ISO 9002, and ISO 9003

ISO 9000-3: 1997, Quality management and quality assurance standards — Part 3: Guidelines for the application of ISO 9000 to the development, supply, and maintenance of software

ISO 9001: 1994, Quality systems — Model for quality assurance in design, development, production, installation, and servicing

ISO 9002: 1994, Quality systems — Model for quality assurance in production and servicing

ISO 9003: 1994, Quality systems — Model for quality assurance in final inspection and test

Publisher: International Organization for Standardization (ISO), 1 rue de Varembé, Case Postale 56, CH-1211, Genevè 20, Switzerland/Suisse

[1] May also be obtained from American National Standards Institute (ANSI), 25 West 43rd Street, New York, NY 10036.

Copyright ASME International
Provided by IHS under license with ASME
No reproduction or networking permitted without license from IHS
Not for Resale

NONMANDATORY APPENDIX A
QUALITY SYSTEM PROGRAM

The products manufactured in accordance with this Standard shall be produced under a quality system program following the principles of an appropriate standard from the ISO 9000 series.[1] A determination of the need for registration and/or certification of the product manufacturer's quality system program by an independent organization shall be the responsibility of the manufacturer. The detailed documentation demonstrating program compliance shall be available to the purchaser at the manufacturer's facility. A written summary description of the program utilized by the product manufacturer shall be available to the purchaser upon request. The product manufacturer is defined as the entity whose name or trademark appears on the product in accordance with the marking or identification requirements of this Standard.

[1] The series is also available from the American National Standards Institute (ANSI) and the American Society for Quality Control (ASQC) as American National Standards that are identified by a prefix "Q" replacing the prefix "ISO." Each standard of the series is listed under Mandatory Appendix II, References.

Copyright ASME International
Provided by IHS under license with ASME
No reproduction or networking permitted without license from IHS
Not for Resale

AMERICAN NATIONAL STANDARDS FOR PIPING, PIPE FLANGES, FITTINGS, AND VALVES

Scheme for the Identification of Piping Systems A13.1-1996
Pipe Threads, General Purpose (Inch) B1.20.1-1983 (R1992)
Dryseal Pipe Threads (Inch) B1.20.3-1976 (R1998)
Cast Iron Pipe Flanges and Flanged Fittings: Classes 25, 125, and 250 ..... B16.1-1998
Malleable Iron Threaded Fittings: Classes 150 and 300 ..... B16.3-1998
Gray Iron Threaded Fittings: Classes 125 and 250 ..... B16.4-1998
Pipe Flanges and Flanged Fittings (NPS ½ Through NPS 24) B16.5-1996
Factory-Made Wrought Buttwelding Fittings B16.9-2001
Face-to-Face and End-to-End Dimensions of Valves B16.10-2000
Forged Fittings, Socket-Welding and Threaded B16.11-2001
Cast Iron Threaded Drainage Fittings B16.12-1998
Ferrous Pipe Plugs, Bushings, and Locknuts with Pipe Threads B16.14-1991
Cast Bronze Threaded Fittings: Classes 125 and 250 ..... B16.15-1985 (R1994)
Cast Copper Alloy Solder Joint Pressure Fittings B16.18-2001
Metallic Gaskets for Pipe Flanges: Ring-Joint, Spiral-Wound, and Jacketed B16.20-1998
Nonmetallic Flat Gaskets for Pipe Flanges B16.21-1992
Wrought Copper and Copper Alloy Solder Joint Pressure Fittings B16.22-2001
Cast Copper Alloy Solder Joint Drainage Fittings: DWV B16.23-2002
Cast Copper Alloy Pipe Flanges and Flanged Fittings: Class 150, 300, 400, 600, 900, 1500, and 2500 ..... B16.24-2001
Buttwelding Ends B16.25-1997
Cast Copper Alloy Fittings for Flared Copper Tubes B16.26-1988
Wrought Steel Buttwelding Short Radius Elbows and Returns B16.28-1994
Wrought Copper and Wrought Copper Alloy Solder Joint Drainage Fittings — DWV B16.29-2001
Manually Operated Metallic Gas Valves for Use in Gas Piping Systems up to 125 psig (Sizes ½ Through 2) B16.33-1990
Valves — Flanged, Threaded, and Welding End B16.34-1996
Orifice Flanges B16.36-1996
Large Metallic Valves for Gas Distribution (Manually Operated, NPS 2½ to 12, 125 psig Maximum) B16.38-1985 (R1994)
Malleable Iron Threaded Pipe Unions B16.39-1998
Manually Operated Thermoplastic Gas Shutoffs and Valves in Gas Distribution Systems B16.40-2002
Functional Qualification Requirements for Power Operated Active Valve Assemblies for Nuclear Power Plants B16.41-1983 (R1989)
Ductile Iron Pipe Flanges and Flanged Fittings, Classes 150 and 300 ..... B16.42-1998
Manually Operated Metallic Gas Valves for Use in House Piping Systems B16.44-1995
Cast Iron Fittings for Sovent® Drainage Systems B16.45-1998
Large Diameter Steel Flanges (NPS 26 Through NPS 60) B16.47-1996
Steel Line Blanks B16.48-1997
Factory-Made Wrought Steel Buttwelding Induction Bends for Transportation and Distribution Systems B16.49-2000
Wrought Copper and Copper Alloy Braze-Joint Pressure Fittings B16.50-2001
Power Piping B31.1-2001
Fuel Gas Piping (not an ANSI standard) B31.2-1968
Process Piping B31.3-2002
Pipeline Transportation Systems for Liquid Hydrocarbons and Other Liquids B31.4-1998
Refrigeration Piping and Heat Transfer Components B31.5-2001
Gas Transmission and Distribution Piping Systems B31.8-1999
Building Services Piping B31.9-1996
Slurry Transportation Piping Systems B31.11-1989 (R1998)
Manual for Determining the Remaining Strength of Corroded Pipelines B31G-1991
Welded and Seamless Wrought Steel Pipe B36.10M-1996
Stainless Steel Pipe B36.19M-1985 (R1994)
Self-Operated and Power-Operated Safety-Related Valves Functional Specification Standard N278.1-1975 (R1992)

The ASME Publications Catalog shows a complete list of all the Standards published by the Society. For a complimentary catalog, or the latest information about our publications, call 1-800-THE-ASME (1-800-843-2763).

Copyright ASME International
Provided by IHS under license with ASME
No reproduction or networking permitted without license from IHS
Not for Resale

ISBN 0-7918-2770-4





Copyright ASME International
Provided by IHS under license with ASME
No reproduction or networking permitted without license from IHS

Not for Resale