AN AMERICAN NATIONAL STANDARD

ASME B16.20a-2000

ADDENDA

to

ASME B16.20-1998
METALLIC GASKETS FOR PIPE FLANGES
Ring-Joint, Spiral-Wound, and Jacketed

THE AMERICAN SOCIETY OF MECHANICAL ENGINEERS
Three Park Avenue • New York, NY 10016

Copyright ASME International
Provided by IHS under license with ASME
No reproduction or networking permitted without license from IHS
Not for Resale

Date of Issuance: July 21, 2000

ASME is the registered trademark of The American Society of Mechanical Engineers.

This code or standard was developed under procedures accredited as meeting the criteria for American National Standards. The Standards Committee that approved the code or standard was balanced to assure that individuals from competent and concerned interests have had an opportunity to participate. The proposed code or standard was made available for public review and comment that provides an opportunity for additional public input from industry, academia, regulatory agencies, and the public-at-large.

ASME does not "approve," "rate," or "endorse" any item, construction, proprietary device, or activity.

ASME does not take any position with respect to the validity of any patent rights asserted in connection with any items mentioned in this document, and does not undertake to insure anyone utilizing a standard against liability for infringement of any applicable letters patent, nor assume any such liability. Users of a code or standard are expressly advised that determination of the validity of any such patent rights, and the risk of infringement of such rights, is entirely their own responsibility.

Participation by federal agency representative(s) or person(s) affiliated with industry is not to be interpreted as government or industry endorsement of this code or standard.

ASME accepts responsibility for only those interpretations of this document issued in accordance with the established ASME procedures and policies, which precludes the issuance of interpretations by individuals.

No part of this document may be reproduced in any form,
in an electronic retrieval system or otherwise,
without the prior written permission of the publisher.

The American Society of Mechanical Engineers
Three Park Avenue, New York, NY 10016-5990

Copyright © 2000 by
THE AMERICAN SOCIETY OF MECHANICAL ENGINEERS
All Rights Reserved
Printed in U.S.A.

Copyright ASME International
Provided by IHS under license with ASME
No reproduction or networking permitted without license from IHS

Not for Resale

ASME B16.20a-2000

Following approval by the ASME B16 Committee and ASME, and after public review, ASME B16.20a-2000 was approved by the American National Standards Institute on May 3, 2000.

Addenda to the 1998 edition of ASME B16.20 are issued in the form of replacement pages. Revisions, additions, and deletions are incorporated directly into the affected pages. It is advisable, however, that this page, the Addenda title and copyright pages, and all replaced pages be retained for reference.

SUMMARY OF CHANGES

This is the first Addenda to be published to ASME B16.20-1998.

Replace or insert the pages listed. Changes given below are identified on the pages by a margin note, **(a)**, placed next to the affected area. The pages not listed are the reverse sides of the listed pages and contain no changes.

Page	*Location*	*Change*
v	Committee Roster	Updated to reflect Addenda
xi	Contents	Updated to reflect Addenda
2, 2.1	Paragraph 3.2.5	Revised
21	Table 12	Notes (1) and (3) revised
23	Table 14	General Note (c) and Notes (1) and (2) revised
24	Table 15	(1) Title revised (2) General Notes added
28	Table 19	Revised
35	Mandatory Annex I	Revised

Copyright ASME International
Provided by IHS under license with ASME
No reproduction or networking permitted without license from IHS
Not for Resale

STD.ASME B16.20-ENGL 1998 ■ 0759670 0616931 624 ■

ASME B16.20-1998
(Revision of ASME B16.20-1993)

METALLIC GASKETS FOR PIPE FLANGES

Ring-Joint, Spiral-Wound, and Jacketed

AN AMERICAN NATIONAL STANDARD

The American Society of
Mechanical Engineers

Copyright ASME International
Provided by IHS under license with ASME
No reproduction or networking permitted without license from IHS
Not for Resale

STD.ASME B16.20-ENGL 1998 ■ 0759670 0616932 560 ■



The American Society of Mechanical Engineers

AN AMERICAN NATIONAL STANDARD

METALLIC GASKETS FOR PIPE FLANGES

Ring-Joint, Spiral-Wound, and Jacketed

ASME B16.20-1998
(Revision of ASME B16.20-1993)

Copyright ASME International
Provided by IHS under license with ASME
No reproduction or networking permitted without license from IHS
Not for Resale

Date of Issuance: April 28, 2000

The 1998 edition of this Standard is being issued with an automatic addenda subscription service. The use of addenda allows revisions made in response to public review comments or committee actions to be published on a regular yearly basis; revisions published in addenda will become effective 6 months after the Date of Issuance of the addenda. The next edition of this Standard is scheduled for publication in 2003.

ASME issues written replies to inquiries concerning interpretations of technical aspects of this Standard. The interpretations will be included with the above addenda service.

ASME is the registered trademark of The American Society of Mechanical Engineers.

This code or standard was developed under procedures accredited as meeting the criteria for American National Standards. The Standards Committee that approved the code or standard was balanced to assure that individuals from competent and concerned interests have had an opportunity to participate. The proposed code or standard was made available for public review and comment that provides an opportunity for additional public input from industry, academia, regulatory agencies, and the public-at-large.

ASME does not "approve," "rate," or "endorse" any item, construction, proprietary device, or activity.

ASME does not take any position with respect to the validity of any patent rights asserted in connection with any items mentioned in this document, and does not undertake to insure anyone utilizing a standard against liability for infringement of any applicable letters patent, nor assumes any such liability. Users of a code or standard are expressly advised that determination of the validity of any such patent rights, and the risk of infringement of such rights, is entirely their own responsibility.

Participation by federal agency representative(s) or person(s) affiliated with industry is not to be interpreted as government or industry endorsement of this code or standard.

ASME accepts responsibility for only those interpretations issued in accordance with established ASME procedures and policies, which precludes the issuance of interpretations by individuals.

No part of this document may be reproduced in any form,
in an electronic retrieval system or otherwise,
without the prior written permission of the publisher.

The American Society of Mechanical Engineers
Three Park Avenue, New York, NY 10016-5990

Copyright © 2000 by
THE AMERICAN SOCIETY OF MECHANICAL ENGINEERS
All Rights Reserved
Printed in U.S.A.

Copyright ASME International
Provided by IHS under license with ASME
No reproduction or networking permitted without license from IHS

Not for Resale

FOREWORD

Ring-joint gaskets and grooves probably originated in the boiler field, where they were used in various forms for manhole covers, autoclaves, and other closures; however, it was in the oil industry (both in the production and refining of oil) that they received the greatest recognition and were developed into their present form. Their use expanded steadily as temperatures and pressures were increased in steam plants. Tests examining their application in flanges and valves were conducted as early as 1928.

In June 1936, the American Petroleum Institute (API) issued Tentative Standard 5-G-3 on Ring-Joints for Steel Flanges and Flange Unions for use with API Tubular Goods. This standard was known as API Specification 6B, Ring-Joint Flanges. Following the acceptance of ring-joints for flanges and valves by API and the issuance of their standard, ASA B16e on Steel Pipe Flanges and Flanged Fittings was revised to include them, and the 1939 edition included standard dimensions for a full line of ring-joint flanges based on the API standard. Development work continued, and API formulated Standard 6E, Specification for Wellhead Equipment, which included ring-joints not covered in ASA B16e-1939.

In 1949, the American Standards Association (ASA), Sectional Committee B16, Subcommittee 3, Steel Flanges and Flanged Fittings, assembled the available information on ring-joint gaskets into a single standard. ASA approval was granted on April 30, 1952, with the designation ASA B16.20-1952.

Ring gaskets for Class 900 (900 lb at that time) in sizes NPS 26 through 36 were added, and ASA approval was granted on April 30, 1952.

An updated version was submitted, and ASA approval was granted on April 4, 1955, with the designation ASA B16.20-1955. The standard was reviewed, and reaffirmation approval was granted by the ASA on April 25, 1963.

The standard was reviewed, and reaffirmation approval was granted by the American National Standards Institute (ANSI) on April 25, 1973, with the designation of an American National Standard.

API requested that ASME convert their gasket standard, API 601, into an ASME American National Standard. As a result of that request, this edition was expanded to include requirements for spiral-wound and jacketed gaskets that were formerly listed in API 601, 7th edition, 1988. Also, ring-joint groove dimensions are not included in this edition because they are included in ASME/ANSI B16.5-1988, titled Pipe Flanges and Flanged Fittings, and ASME B16.47-1990, titled Large Diameter Steel Flanges.

The 1993 edition was approved by the B16 Standards Committee. Following approval by ASME, approval by ANSI was given on January 22, 1993, with the designation ASME B16.20-1993.

In the 1998 edition of ASME B16.20, reference standards are updated, a quality system program annex is added, inner ring inside diameters for spiral-wound gaskets are revised, and several editorial revisions are made. Following approval by ASME B16 Subcommittee B and the B16 Main Committee, ANSI approved this American National Standard on November 20, 1998.

Requests for interpretations or suggestions for revision should be sent to The American Society of Mechanical Engineers; Secretary, B16 Committee; Three Park Avenue, New York, New York 10016-5990.

Copyright ASME International
Provided by IHS under license with ASME
No reproduction or networking permitted without license from IHS
Not for Resale

ASME B16 COMMITTEE (a)
Standardization of Valves, Flanges, Fittings, Gaskets, and Valve Actuators

(The following is the roster of the Committee at the time of approval of this Standard.)

OFFICERS

W. N. McLean, *Chair*
H. R. Sonderegger, *Vice Chair*
P. A. Reddington, *Secretary*

COMMITTEE PERSONNEL

W. L. Ballis, Consultant, London, Ohio
R. W. Barnes, Anric Enterprises, Etobicoke, Ontario, Canada
R. R. Brodin, Fisher Controls International, Inc., Marshalltown, Iowa
M. A. Clark, Nibco, Inc., Elkhart, Indiana
A. Cohen, A. Cohen and Associates, Albuquerque, New Mexico
C. E. Floren, Mueller Co., Decatur, Illinois
D. R. Frikken, Solutia, Inc., St. Louis, Missouri
R. Henrich, Minnegasco, Inc., Golden Valley, Minnesota
J. C. Inch, Mueller Refrigeration Products Co., Hartsville, Tennessee
G. A. Jolly, Vogt Valve Co., Louisville, Kentucky
W. G. Knecht, BW/IP International, Inc., Williamsport, Pennsylvania
R. Koester, The William Powell Co., Cincinnati, Ohio
W. N. McLean, Newco Valves, Palos Park, Illinois
M. L. Nayyar, Bechtel Power Corp., Gaithersburg, Maryland
P. A. Reddington, American Society of Mechanical Engineers, New York, New York
R. A. Schmidt, Trinity-Ladish Co., Russellville, Arkansas
H. R. Sonderegger, Grinnell Corp., Cranston, Rhode Island
W. M. Stephan, Flexitallic, Inc., Mount Laurel, New Jersey
T. F. Stroud, Ductile Iron Pipe Research Association, Birmingham, Alabama
M. D. Wasicek, ABS Americas, Houston, Texas
R. E. White, Richard E. White and Associates, South Bend, Indiana
D. A. Williams, Southern Company Services, Birmingham, Alabama
L. A. Willis, The Dow Chemical Co., Freeport, Texas
W. R. Worley, Union Carbide Corp., South Charleston, West Virginia

SUBCOMMITTEE G — GASKETS FOR FLANGED JOINTS

W. M. Stephan, *Chair,* Flexitallic, Inc., Mount Laurel, New Jersey
C. B. Gillis, *Vice Chair,* Lamons Gasket Co., Houston, Texas
M. R. Argenziano, *Secretary,* American Society of Mechanical Engineers, New York, New York
K. A. Benton, Leader Gasket, Inc., Houston, Texas
W. E. Holden, Solutia, Inc., Alvin, Texas
D. H. Monroe, Consultant, Birmingham, Alabama
R. T. Mueller, ExxonMobil Research and Engineering Co., Florham Park, New Jersey
D. F. Reid, Garlock Metallic Gasket Division, Houston, Texas
J. Tzeng, Ucar Carbon Co., Inc., Parma, Ohio
W. R. Worley, Union Carbide Corp., South Charleston, West Virginia

Copyright ASME International
Provided by IHS under license with ASME
No reproduction or networking permitted without license from IHS
Not for Resale

CORRESPONDENCE WITH THE B16 COMMITTEE

General. ASME Standards are developed and maintained with the intent to represent the consensus of concerned interests. As such, users of this Standard may interact with the Committee by requesting interpretations, proposing revisions, and attending Committee meetings. Correspondence should be addressed to:

Secretary, B16 Main Committee
The American Society of Mechanical Engineers
Three Park Avenue
New York, NY 10016-5990

Proposing Revisions. Revisions are made periodically to the Standard to incorporate changes that appear necessary or desirable, as demonstrated by the experience gained from the application of the Standard. Approved revisions will be published periodically.

The Committee welcomes proposals for revisions to this Standard. Such proposals should be as specific as possible, citing the paragraph number(s), the proposed wording, and a detailed description of the reasons for the proposal, including any pertinent documentation.

Interpretations. Upon request, the B16 Committee will render an interpretation of any requirement of the Standard. Interpretations can only be rendered in response to a written request sent to the Secretary of the B16 Main Committee.

The request for interpretation should be clear and unambiguous. It is further recommended that the inquirer submit his/her request in the following format:

Subject:	Cite the applicable paragraph number(s) and the topic of the inquiry.
Edition:	Cite the applicable edition of the Standard for which the interpretation is being requested.
Question:	Phrase the question as a request for an interpretation of a specific requirement suitable for general understanding and use, not as a request for an approval of a proprietary design or situation. The inquirer may also include any plans or drawings, which are necessary to explain the question; however, they should not contain proprietary names or information.

Requests that are not in this format will be rewritten in this format by the Committee prior to being answered, which may inadvertently change the intent of the original request.

ASME procedures provide for reconsideration of any interpretation when or if additional information that might affect an interpretation is available. Further, persons aggrieved by an interpretation may appeal to the cognizant ASME Committee or Subcommittee. ASME does not "approve," "certify," "rate," or "endorse" any item, construction, proprietary device, or activity.

Attending Committee Meetings. The B16 Main Committee regularly holds meetings, which are open to the public. Persons wishing to attend any meeting should contact the Secretary of the B16 Main Committee.

Copyright ASME International
Provided by IHS under license with ASME
No reproduction or networking permitted without license from IHS
Not for Resale

IMPORTANT INFORMATION CONCERNING USE OF ASBESTOS OR ALTERNATIVE MATERIALS

Asbestos is referenced for use as a filler material in metallic gaskets. It has served as a universal sealing material, compatible with most fluid services. It has been of extreme usefulness in minimizing fire hazards.

Certain serious adverse health effects are associated with asbestos, among them the serious and often fatal diseases of lung cancer, asbestosis, and mesothelioma (a cancer of the chest and abdominal linings). The degree of exposure to asbestos varies with the product and the work practices involved.

Consult the most recent edition of the Occupational Safety and Health Administration, U.S. Department of Labor, Occupational Safety and Health Standard for Asbestos, Tremolite, Anthophyllite, and Actinolite, 29 Code of Federal Regulations Section 1910.1001; the U.S. Environmental Protection Agency, National Emission Standard for Asbestos, 40 Code of Federal Regulations Sections 61.140 through 61.156; and the proposed rule by the U.S. Environmental Protection Agency proposing labeling requirements and phased banning of asbestos products, published at 51 Federal Register 3738-3759 (January 29, 1986).

There are currently in use and under development a number of substitute materials to replace asbestos in certain applications. Manufacturers and users are encouraged to develop and use effective substitute materials that can meet the specifications for, and operating requirements of, the equipment to which they would apply.

Information concerning safety and health risks and proper precautions with respect to particular materials and conditions should be obtained from one's employer, the manufacturer or supplier of that material, or the Material Safety Data Sheet.

Copyright ASME International
Provided by IHS under license with ASME
No reproduction or networking permitted without license from IHS
Not for Resale

CONTENTS

(a)

Foreword iii
Committee Roster v
Correspondence With the B16 Committee vii
Important Information Concerning Use of Asbestos or Alternative Materials ix

1 Scope 1

2 Ring-Joint Gaskets 1

3 Spiral-Wound Gaskets 2

4 Jacketed Gaskets 3

Tables

1 Maximum Hardness for Ring Gaskets 1
2 Ring Gasket Markings 2
3 Type R Ring Gasket Dimensions and Tolerances 4
4 Pipe Sizes for Type R Ring Gaskets Suitable for Referenced Standards 7
5 Type RX Ring Gasket Dimensions and Tolerances 10
6 Pipe Sizes for Type RX Ring Gaskets Suitable for Referenced Standards 12
7 Type BX Ring Gasket Dimensions and Tolerances 13
8 Pipe Sizes for Type BX Ring Gaskets Suitable for Referenced Standards 14
9 Dimensions for Spiral-Wound Gaskets Used With ASME B16.5 Flanges 16
10 Dimensions for Spiral-Wound Gaskets Used With ASME B16.47 Series A Flanges 18
11 Dimensions for Spiral-Wound Gaskets Used With ASME B16.47 Series B Flanges 20
12 Inner-Ring Inside Diameters for Spiral-Wound Gaskets 21
13 Inner-Ring Inside Diameters for Spiral-Wound Gaskets Used Between ASME B16.47 Series A Flanges 22
14 Inner-Ring Inside Diameters for Spiral-Wound Gaskets Used Between ASME B16.47 Series B Flanges 23
15 Minimum Pipe Wall Thickness Suitable for Use of Spiral-Wound Gaskets With Inner Rings for ASME B16.5 Flanges 24
16 Maximum Bore of ASME B16.5 Flanges for Use With Spiral-Wound Gaskets 25
17 Maximum Bore of ASME B16.47 Series A Flanges for Use With Spiral-Wound Gaskets 26
18 Maximum Bore of ASME B16.47 Series B Flanges for Use With Spiral-Wound Gaskets 27
19 Color Coding and Abbreviations for Spiral-Wound Gasket Materials 28
20 Example Markings for Spiral-Wound Gaskets 29
21 Jacketed Gasket Dimensions for ASME B16.5 Flanges 30
22 Jacketed Gasket Dimensions for ASME B16.47 Series A Flanges 31
23 Jacketed Gasket Dimensions for ASME B16.47 Series B Flanges 32
24 Abbreviations for Identifying Materials for Jacketed Gaskets 33
25 Example Markings for Jacketed Gaskets 33

Copyright ASME International
Provided by IHS under license with ASME
No reproduction or networking permitted without license from IHS
Not for Resale

Mandatory Annex

I References 35

Nonmandatory Annex

A Quality System Program 37

Copyright ASME International
Provided by IHS under license with ASME
No reproduction or networking permitted without license from IHS

Not for Resale

METALLIC GASKETS FOR PIPE FLANGES

Ring-Joint, Spiral-Wound, and Jacketed

1 SCOPE

1.1 General

This Standard covers materials, dimensions, tolerances, and markings for metal ring-joint gaskets, spiral-wound metal gaskets, metal-jacketed gaskets, and filler material. These gaskets are dimensionally suitable for use with flanges described in reference flange standards ASME B16.5, ASME B16.47, and API Specification 6A. This Standard covers spiral-wound metal gaskets and metal-jacketed gaskets for use with raised-face and flat-face flanges.

1.2 Quality Systems

Requirements relating to the product manufacturers' quality system programs are described in Annex A.

1.3 References

Standards and specifications adopted by reference in this Standard are shown in Annex I, which is part of this Standard.

2 RING-JOINT GASKETS

2.1 Types

Ring-joint gaskets shall be either octagonal or oval in cross section.

2.2 Size

Ring-joint gaskets shall be identified by an R, RX, or BX number that relates to flange size (NPS), pressure class, and the appropriate flange standards (ASME B16.5, ASME B16.47, or API Specification 6A).

2.3 Materials

2.3.1 General. Ring-joint gasket materials, some of which are listed in Table 1, shall be selected by the user based on suitability for the service conditions.

TABLE 1 MAXIMUM HARDNESS FOR RING GASKETS

Ring Gasket Material	Maximum Hardness	
	Brinell	Rockwell "B" Scale
Soft iron (1)	90	56
Low-carbon steel	120	68
4–6 chrome ½Mo	130	72
Type 410	170	86
Type 304	160	83
Type 316	160	83
Type 347	160	83

NOTE:
(1) May be low-carbon steel, not to exceed maximum hardness of 90 Brinell—56 Rockwell "B."

It is recommended that ring-joint gaskets be of a lesser hardness than that of the mating flanges.

2.3.2 Hardness. Ring-joint gaskets of materials listed in Table 1 shall have a hardness equal to or less than that shown in Table 1.

2.4 Marking

The outer surface of each gasket shall carry the manufacturer's name or identification trademark and gasket number prefixed by the letters R, RX, or BX followed by the gasket material identification. Materials shall be identified as shown in Table 2. The gasket shall also be marked with an ASME B16.20 designation. The marking shall be applied so as not to harmfully distort the gasket or affect the integrity of the seal.

2.5 Dimensions and Tolerances

Dimensions and tolerances for ring-joint gaskets shall be as shown in Tables 3 through 8.

2.6 Surface Finish

Types R and RX gaskets shall have a finish not rougher than 63 μin. roughness. Type BX gaskets shall have a finish not rougher than 32 μin. roughness. Surface finishes shall pertain to the gasket-sealing surfaces.

Copyright ASME International
Provided by IHS under license with ASME
No reproduction or networking permitted without license from IHS
Not for Resale

TABLE 2 RING GASKET MARKINGS

Ring Gasket Material	Identification	Marking Example (1)
Soft iron (2)	D	R51D
Low-carbon steel	S	R51S
4–6 chrome ½Mo	F5 (3)	R51F5
Type 410	S 410	R51S410
Type 304	S 304	R51S304
Type 316	S 316	R51S316
Type 347	S 347	R51S347

NOTES:
(1) This number shall be preceded by the manufacturer's name or identification trademark.
(2) May be low-carbon steel, not to exceed maximum hardness of 90 Brinell—56 Rockwell "B."
(3) F5 identification designates ASTM Specification A 182-72 chemical composition requirements only.

2.7 Identification Number

Dimensional reference identification numbers are assigned to ring-joint gaskets and are shown in Tables 3 through 8.

3 SPIRAL-WOUND GASKETS

3.1 Size and Class

Spiral-wound gaskets, including centering ring and inner ring (paras. 3.2.4 and 3.2.5), are identified by flange size (NPS), pressure class, and the appropriate flange standard (ASME B16.5 or ASME B16.47).

3.2 Dimensions and Tolerances

3.2.1 General. Dimensions and tolerances for spiral-wound gaskets, centering rings, and inner rings shall be in accordance with Tables 9 through 11 and as specified in this section.

3.2.2 Construction. Spiral-wound gaskets shall be constructed as alternate plies (circular layers counted as revolutions) of preformed metal windings and plaint fillers that are spirally wound. For the finished gasket, the filler shall be essentially flush with, but not below, the metal winding on both contact faces of the gasket. The metal strip in the winding shall be 0.006 in. to 0.009 in. thick. The filler material thickness shall be determined by the manufacturer.

3.2.3 Metal Joining. The inner windings shall have a minimum of three plies of preformed metal strip without filler. The initial two plies shall be spot-welded circumferentially with a minimum of three welds spaced at a maximum distance of 3 in. The outer windings, which shall have a minimum of three plies of preformed metal without filler, shall be spot-welded circumferentially with a minimum of three welds, the last of which shall be the terminal weld.

The distance of the first weld from the terminal weld shall be no greater than 1.5 in. Up to four additional loose preformed metal windings beyond the terminal weld may be used to retain the gasket into the centering ring.

3.2.4 Centering Ring. All spiral-wound gaskets shall be furnished assembled into a centering ring. The centering ring thickness shall be from 0.117 in. to 0.131 in. and suitably grooved on the inside diameter so as to retain the gasket.

3.2.5 Inner Ring. Inner rings shall be furnished with all spiral-wound gaskets having PTFE (polytetrafluoroethylene) filler material. It is recommended that inner rings be specified by the user for flexible graphite and other filler materials (if appropriate for flanges and bore sizes used), particularly where experience has demonstrated inward buckling of the gaskets to be a problem. Inner rings shall be furnished in spiral-wound gaskets for flanges NPS 24 and larger in Class 900, NPS 12 and larger in Class 1500, and NPS 4 and larger in Class 2500. Gaskets with inner rings should be used only with socket welding, lapped, welding neck, and integral flanges. (a)

The inner-ring thickness shall be from 0.117 in. to 0.131 in. Tables 12 through 14 show inner-ring inside diameters that may extend a maximum of 0.06 in. into the flange bore under the worst combination of flange bore, eccentric installation, and tolerance. Reference Table 15 for minimum pipe wall thickness for use with gaskets with inner rings. Reference Tables 16, 17, and 18 for maximum allowable bore for use with gaskets without inner rings.

3.2.6 Gasket Compression. Spiral-wound gaskets NPS ½, NPS ¾, and NPS 1 in Classes 150, 300, and 600 shall be designed so that a uniform bolt stress of 25,000 psi, based on the nominal bolt root diameter, will compress the gasket to a thickness of 0.130 in. ±0.005 in. All other gasket sizes and classes shall be designed so that a uniform bolt stress of 30,000 psi will compress the gasket to a thickness of 0.130 in. ±0.005 in.

3.3 Materials

Metal windings and filler materials shall be in accordance with Table 19. The inner ring shall be of a material

Copyright ASME International
Provided by IHS under license with ASME
No reproduction or networking permitted without license from IHS
Not for Resale

that has corrosion resistant characteristics equivalent to or better than that of the metal winding. The centering ring may be carbon steel that is painted, metal plated, or otherwise coated to inhibit atmospheric corrosion.

Copyright ASME International
Provided by IHS under license with ASME
No reproduction or networking permitted without license from IHS Not for Resale

3.4 Marking

3.4.1 General. The centering ring of each spiral-wound gasket shall be permanently marked. The lettering height shall be a minimum of 0.1 in. The following information shall be included with the centering ring markings:

(a) Manufacturer's name or trademark.

(b) Flange size (NPS).

(c) Pressure class.

(d) Winding metal abbreviation (Table 19), except that the abbreviation may be omitted when 304 stainless steel is used.

(e) Filler material abbreviation (Table 19).

(f) Centering and inner ring metal abbreviation (Table 19), except that the abbreviation may be omitted when carbon steel is used for the outer ring and 304 stainless steel is used for the inner ring.

(g) Flange identification. Gaskets intended for ASME B16.47 flanges shall be marked B16.47 A or B16.47 B, as applicable. Gaskets intended for ASME B16.5 flanges need not be so marked. Illustrative marking examples are shown in Table 20.

(h) ASME B16.20 designation.

3.4.2 Pressure Class. Gaskets suitable for more than one pressure class shall be marked with all applicable classes, as shown in Table 20.

3.4.3 Color Coding. Spiral-wound gaskets shall be marked with a color code that identifies the windings and filler materials. A continuous color around the outer edge of the centering ring shall identify the winding metal. The color identifying the filler material for NPS $1\frac{1}{2}$ and larger shall have four intermittent stripes spaced approximately 90 deg apart on the outer edge of the centering ring. Smaller size gaskets shall have a minimum of two stripes 180 deg apart. The colors shall conform to those listed in Table 19.

4 JACKETED GASKETS

4.1 Size and Pressure Class

Jacketed gaskets are identified by flange size (NPS), pressure class, and the appropriate flange standard (ASME B16.5 or ASME B16.47).

4.2 Design

4.2.1 General. Jacketed gaskets shall be made with a filler material enclosed in a metal jacket.

4.2.2 Jacket Thickness. The jacket metal thickness shall be a minimum of 0.015 in.

4.2.3 Filler Thickness. The filler thickness shall be a minimum of 0.06 in.

4.2.4 Miscellaneous. Other design details, including the density of the filler, shall be the gasket manufacturer's responsibility.

4.3 Dimensions and Tolerances

Gasket dimensions and tolerances shall be in accordance with Tables 21, 22, or 23.

4.4 Materials

Metal jacket and filler material shall be selected from Table 24. For jacketed gasket limitations related to ASME B16.5 applications, see Annex E of ASME B16.5.

4.5 Marking

4.5.1 Applied Marking. Jacketed gaskets shall be marked with waterproof ink or equivalent. Where gasket size does not permit such markings, a separate attached marking tag may be used. The lettering height shall be a minimum of 0.2 in. The following information shall be included with the markings:

(a) Manufacturer's name or trademark.

(b) Flange size (NPS).

(c) Pressure class.

(d) Jacketed material abbreviation (Table 24), except that the abbreviation may be omitted when soft carbon steel is used.

(e) Filler material abbreviation (Table 24).

(f) Flange identification. Gaskets intended for ASME B16.47 flanges shall be marked B16.47 A or B16.47 B, as applicable. Gaskets intended for ASME B16.5 flanges need not be so marked. Illustrative marking examples are shown in Table 25.

(g) ASME B16.20 designation.

4.5.2 Pressure Class. Gaskets suitable for more than one pressure class shall be marked with all applicable classes.

Copyright ASME International
Provided by IHS under license with ASME
No reproduction or networking permitted without license from IHS
Not for Resale

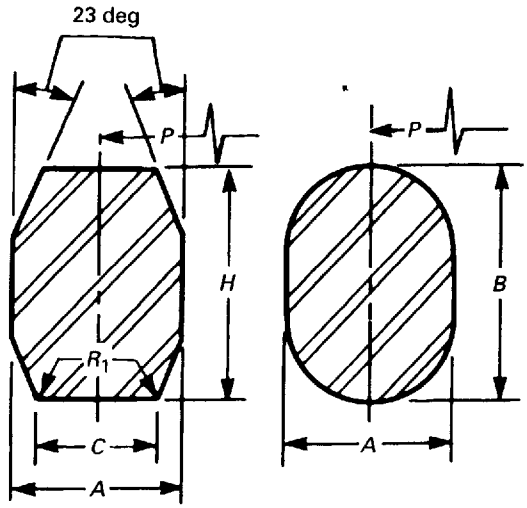

Octagonal Oval

TABLE 3 TYPE R RING GASKET DIMENSIONS AND TOLERANCES

Ring Number	Pitch Diameter of Ring, *P*	Width of Ring, *A*	Height of Ring		Width of Flat on Octagonal Ring, *C*	Radius in Octagonal Ring, R_1
			Oval, *B*	Octagonal, *H*		
R-11	1.344	0.250	0.44	0.38	0.170	0.06
R-12	1.563	0.313	0.56	0.50	0.206	0.06
R-13	1.688	0.313	0.56	0.50	0.206	0.06
R-14	1.750	0.313	0.56	0.50	0.206	0.06
R-15	1.875	0.313	0.56	0.50	0.206	0.06
R-16	2.000	0.313	0.56	0.50	0.206	0.06
R-17	2.250	0.313	0.56	0.50	0.206	0.06
R-18	2.375	0.313	0.56	0.50	0.206	0.06
R-19	2.563	0.313	0.56	0.50	0.206	0.06
R-20	2.688	0.313	0.56	0.50	0.206	0.06
R-21	2.844	0.438	0.69	0.63	0.305	0.06
R-22	3.250	0.313	0.56	0.50	0.206	0.06
R-23	3.250	0.438	0.69	0.63	0.305	0.06
R-24	3.750	0.438	0.69	0.63	0.305	0.06
R-25	4.000	0.313	0.56	0.50	0.206	0.06
R-26	4.000	0.438	0.69	0.63	0.305	0.06
R-27	4.250	0.438	0.69	0.63	0.305	0.06
R-28	4.375	0.500	0.75	0.69	0.341	0.06
R-29	4.500	0.313	0.56	0.50	0.206	0.06
R-30	4.625	0.438	0.69	0.63	0.305	0.06
R-31	4.875	0.438	0.69	0.63	0.305	0.06
R-32	5.000	0.500	0.75	0.69	0.341	0.06
R-33	5.188	0.313	0.56	0.50	0.206	0.06
R-34	5.188	0.438	0.69	0.63	0.305	0.06
R-35	5.375	0.438	0.69	0.63	0.305	0.06

(continued)

Copyright ASME International
Provided by IHS under license with ASME
No reproduction or networking permitted without license from IHS Not for Resale

TABLE 3 TYPE R RING GASKET DIMENSIONS AND TOLERANCES (CONT'D)

Ring Number	Average Pitch Diameter of Ring, *P*	Width of Ring, *A*	Height of Ring		Width of Flat on Octagonal Ring, *C*	Radius in Octagonal Ring, R_1
			Oval, *B*	Octagonal, *H*		
R-36	5.875	0.313	0.56	0.50	0.206	0.06
R-37	5.875	0.438	0.69	0.63	0.305	0.06
R-38	6.188	0.625	0.88	0.81	0.413	0.06
R-39	6.375	0.438	0.69	0.63	0.305	0.06
R-40	6.750	0.313	0.56	0.50	0.206	0.06
R-41	7.125	0.438	0.69	0.63	0.305	0.06
R-42	7.500	0.750	1.00	0.94	0.485	0.06
R-43	7.625	0.313	0.56	0.50	0.206	0.06
R-44	7.625	0.438	0.69	0.63	0.305	0.06
R-45	8.313	0.438	0.69	0.63	0.305	0.06
R-46	8.313	0.500	0.75	0.69	0.341	0.06
R-47	9.000	0.750	1.00	0.94	0.485	0.06
R-48	9.750	0.313	0.56	0.50	0.206	0.06
R-49	10.625	0.438	0.69	0.63	0.305	0.06
R-50	10.625	0.625	0.88	0.81	0.413	0.06
R-51	11.000	0.875	1.13	1.06	0.583	0.06
R-52	12.000	0.313	0.56	0.50	0.206	0.06
R-53	12.750	0.438	0.69	0.63	0.305	0.06
R-54	12.750	0.625	0.88	0.81	0.413	0.06
R-55	13.500	1.125	1.44	1.38	0.780	0.09
R-56	15.000	0.313	0.56	0.50	0.206	0.06
R-57	15.000	0.438	0.69	0.63	0.305	0.06
R-58	15.000	0.875	1.13	1.06	0.583	0.06
R-59	15.625	0.313	0.56	0.50	0.206	0.06
R-60	16.000	1.250	1.56	1.50	0.879	0.09
R-61	16.500	0.438	0.69	0.63	0.305	0.06
R-62	16.500	0.625	0.88	0.81	0.413	0.06
R-63	16.500	1.000	1.31	1.25	0.681	0.09
R-64	17.875	0.313	0.56	0.50	0.206	0.06
R-65	18.500	0.438	0.69	0.63	0.305	0.06
R-66	18.500	0.625	0.88	0.81	0.413	0.06
R-67	18.500	1.125	1.44	1.38	0.780	0.09
R-68	20.375	0.313	0.56	0.50	0.206	0.06
R-69	21.000	0.438	0.69	0.63	0.305	0.06
R-70	21.000	0.750	1.00	0.94	0.485	0.06
R-71	21.000	1.125	1.44	1.38	0.780	0.09
R-72	22.000	0.313	0.56	0.50	0.206	0.06
R-73	23.000	0.500	0.75	0.69	0.341	0.06
R-74	23.000	0.750	1.00	0.94	0.485	0.06
R-75	23.000	1.250	1.56	1.50	0.879	0.09
R-76	26.500	0.313	0.56	0.50	0.206	0.06
R-77	27.250	0.625	0.88	0.81	0.413	0.06
R-78	27.250	1.000	1.31	1.25	0.681	0.09
R-79	27.250	1.375	1.75	1.63	0.977	0.09
R-80	24.250	0.313	. . .	0.50	0.206	0.06

(continued)

Copyright ASME International
Provided by IHS under license with ASME
No reproduction or networking permitted without license from IHS
Not for Resale

TABLE 3 TYPE R RING GASKET DIMENSIONS AND TOLERANCES (CONT'D)

Ring Number	Average Pitch Diameter of Ring, *P*	Width of Ring, *A*	Height of Ring		Width of Flat on Octagonal Ring, *C*	Radius in Octagonal Ring, R_1
			Oval, *B*	Octagonal, *H*		
R-81	25.000	0.563	...	0.75	0.377	0.06
R-82	2.250	0.438	...	0.63	0.305	0.06
R-84	2.500	0.438	...	0.63	0.305	0.06
R-85	3.125	0.500	...	0.69	0.341	0.06
R-86	3.563	0.625	...	0.81	0.413	0.06
R-87	3.938	0.625	...	0.81	0.413	0.06
R-88	4.875	0.750	...	0.94	0.485	0.06
R-89	4.500	0.750	...	0.94	0.485	0.06
R-90	6.125	0.875	...	1.06	0.583	0.06
R-91	10.250	1.250	...	1.50	0.879	0.09
R-92	9.000	0.438	0.69	0.63	0.305	0.06
R-93	29.500	0.750	...	0.94	0.485	0.06
R-94	31.500	0.750	...	0.94	0.485	0.06
R-95	33.750	0.750	...	0.94	0.485	0.06
R-96	36.000	0.875	...	1.06	0.583	0.06
R-97	38.000	0.875	...	1.06	0.583	0.06
R-98	40.250	0.875	...	1.06	0.583	0.06
R-99	9.250	0.438	...	0.63	0.305	0.06
R-100	29.500	1.125	...	1.38	0.780	0.09
R-101	31.500	1.250	...	1.50	0.879	0.09
R-102	33.750	1.250	...	1.50	0.879	0.09
R-103	36.000	1.250	...	1.50	0.879	0.09
R-104	38.000	1.375	...	1.63	0.977	0.09
R-105	40.250	1.375	...	1.63	0.977	0.09

GENERAL NOTE: All dimensions are in inches.

TOLERANCES:

P = average pitch diameter of ring, ±0.007
A = width of ring, ±0.008
B, H = height of ring, +0.05, −0.02
Variation in height throughout the entire circumference of any given ring shall not exceed 0.02 within these tolerances.
C = width of flat on octagonal ring, ±0.008
R_1 = radius in ring, ±0.02
23 deg = angle, ±½ deg

Copyright ASME International
Provided by IHS under license with ASME
No reproduction or networking permitted without license from IHS
Not for Resale

TABLE 4 PIPE SIZES FOR TYPE R RING GASKETS SUITABLE FOR REFERENCED STANDARDS

Ring Number	Pressure Classes											
	ASME B16.5					API 6B				ASME B16.47 Series A		
	150	300–600	900	1500	2500	720–960 (1)	2000	3000	5000	150	300–600	900
R-11	...	1/2	...	...	...	...	...	...	...	...	...	...
R-12	...	...	1/2	1/2	...	...	...	...	...	...	...	...
R-13	...	3/4	...	...	1/2	...	...	...	...	...	...	...
R-14	...	...	3/4	3/4	...	...	...	...	...	...	...	...
R-15	1	...	...	...	...	...	...	...	...	...	...	...
R-16	...	1	1	1	3/4	1	1	1	1	...	...	...
R-17	1 1/4	...	...	...	...	...	...	...	...	...	...	...
R-18	...	1 1/4	1 1/4	1 1/4	1	1 1/4	1 1/4	1 1/4	1 1/4	...	...	...
R-19	1 1/2	...	...	...	...	...	...	...	...	...	...	...
R-20	...	1 1/2	1 1/2	1 1/2	...	1 1/2	1 1/2	1 1/2	1 1/2	...	...	...
R-21	...	...	...	...	1 1/4	...	...	...	...	...	...	...
R-22	2	...	...	...	...	...	...	...	...	...	...	...
R-23	...	2	...	...	1 1/2	2	2	...	...	...	...	...
R-24	...	...	2	2	...	...	...	2	2	...	...	...
R-25	2 1/2	...	...	...	...	...	...	...	...	...	...	...
R-26	...	2 1/2	...	...	2	2 1/2	2 1/2	...	...	...	...	...
R-27	...	...	2 1/2	2 1/2	...	...	...	2 1/2	2 1/2	...	...	...
R-28	...	...	...	...	2 1/2	...	...	...	...	...	...	...
R-29	3	...	...	...	...	...	...	...	...	...	...	...
R-30 (2)	...	3	...	...	...	...	...	...	...	...	...	...
R-31	...	3	3	...	...	3	3	3	...	...	...	...
R-32	...	...	...	...	3	...	...	...	...	...	...	...
R-33	3 1/2	...	...	...	...	...	...	...	...	...	...	...
R-34	...	3 1/2	...	...	...	...	...	...	...	...	...	...
R-35	...	...	...	3	...	...	...	...	3	...	...	...
R-36	4	...	...	...	...	...	...	...	...	...	...	...
R-37	...	4	4	...	...	4	4	4	3 1/2	...	...	...
R-38	...	...	...	...	4	...	...	...	...	...	...	...
R-39	...	...	...	4	...	...	...	...	4	...	...	...
R-40	5	...	...	...	...	...	...	...	...	...	...	...
R-41	...	5	5	...	...	5	5	5	...	...	...	...
R-42	...	...	...	...	5	...	...	...	...	...	...	...
R-43	6	...	...	...	...	...	...	...	...	...	...	...
R-44	...	...	...	5	...	...	...	...	5	...	...	...
R-45	...	6	6	...	...	6	6	6	...	...	...	...
R-46	...	...	...	6	...	...	...	...	6	...	...	...
R-47	...	...	...	...	6	...	...	...	...	...	...	...
R-48	8	...	...	...	...	...	...	...	...	...	...	...
R-49	...	8	8	...	...	8	8	8	...	...	...	...
R-50	...	...	...	8	...	...	...	...	8	...	...	...
R-51	...	...	...	...	8	...	...	...	...	...	...	...
R-52	10	...	...	...	...	...	...	...	...	...	...	...
R-53	...	10	10	...	...	10	10	10	...	...	...	...
R-54	...	...	...	10	...	...	...	...	10	...	...	...

(continued)

Copyright ASME International
Provided by IHS under license with ASME
No reproduction or networking permitted without license from IHS
Not for Resale

STD.ASME B16.20-ENGL 1998 ■ 0759670 0616947 T91 ■

TABLE 4 PIPE SIZES FOR TYPE R RING GASKETS SUITABLE FOR REFERENCED STANDARDS (CONT'D)

Ring Number	Pressure Classes											
	ASME B16.5					API 6B				ASME B16.47 Series A		
	150	300–600	900	1500	2500	720–960 (1)	2000	3000	10000 (1)	150	300–600	900
R-55	...	...	...	...	10	...	...	...	...	...	...	...
R-56	12	...	...	...	...	...	...	...	...	...	...	...
R-57	...	12	12	...	...	12	12	12	...	...	12	12
R-58	...	...	...	12	...	...	...	...	...	...	...	...
R-59	14	...	...	...	...	...	...	...	...	...	...	...
R-60	...	...	...	...	12	...	...	...	...	...	...	...
R-61	...	14	...	...	...	14	14	14	...	...	14	...
R-62	...	...	14	...	...	...	...	...	...	...	...	14
R-63	...	...	...	14	...	...	...	...	...	...	...	...
R-64	16	...	...	...	...	...	...	...	...	...	...	...
R-65	...	16	...	...	...	16	16	...	...	...	16	...
R-66	...	...	16	...	...	...	...	16	...	...	...	16
R-67	...	...	...	16	...	...	...	...	...	...	...	...
R-68	18	...	...	...	...	...	...	...	...	...	...	...
R-69	...	18	...	...	...	18	18	...	...	...	18	...
R-70	...	...	18	...	...	...	...	18	...	...	...	18
R-71	...	...	...	18	...	...	...	...	...	...	...	...
R-72	20	...	...	...	...	...	...	...	...	...	...	...
R-73	...	20	...	...	...	20	20	...	...	...	20	...
R-74	...	...	20	...	...	...	...	20	...	...	...	20
R-75	...	...	...	20	...	...	...	...	...	...	...	...
R-76	24	...	...	...	...	...	...	...	...	...	...	...
R-77	...	24	...	...	...	...	...	...	...	...	24	...
R-78	...	...	24	...	...	...	...	...	...	...	...	24
R-79	...	...	...	24	...	...	...	...	...	...	...	...
R-80	...	...	...	...	...	...	...	...	...	22	...	...
R-81	...	...	...	...	...	...	...	...	...	...	22	...
R-82	...	...	...	...	...	...	...	...	1	...	...	...
R-84	...	...	...	...	...	...	...	...	1½	...	...	...
R-85	...	...	...	...	...	...	...	...	2	...	...	...
R-86	...	...	...	...	...	...	...	...	2½	...	...	...
R-87	...	...	...	...	...	...	...	...	3	...	...	...
R-88	...	...	...	...	...	...	...	...	4	...	...	...
R-89	...	...	...	...	...	...	...	...	3½	...	...	...
R-90	...	...	...	...	...	...	...	...	5	...	...	...
R-91	...	...	...	...	...	...	...	...	10	...	...	...
R-92	...	...	...	...	...	...	...	...	...	...	...	...
R-93	...	...	...	...	...	...	...	...	...	...	26	...
R-94	...	...	...	...	...	...	...	...	...	...	28	...
R-95	...	...	...	...	...	...	...	...	...	...	30	...

(continued)

Copyright ASME International
Provided by IHS under license with ASME
No reproduction or networking permitted without license from IHS
Not for Resale

TABLE 4 PIPE SIZES FOR TYPE R RING GASKETS SUITABLE FOR REFERENCED STANDARDS (CONT'D)

Ring Number	Pressure Classes											
	ASME B16.5					API 6B				ASME B16.47 Series A		
	150	300–600	900	1500	2500	720–960 (1)	2000	3000	10000 (1)	150	300–600	900
R-96	...	...	...	...	...	...	...	...	...	...	32	...
R-97	...	...	...	...	...	...	...	...	...	...	34	...
R-98	...	...	...	...	...	...	...	...	...	...	36	...
R-99	...	...	...	...	...	...	8	8	...	...	...	...
R-100	...	...	...	...	...	...	...	...	...	...	...	26
R-101	...	...	...	...	...	...	...	...	...	...	...	28
R-102	...	...	...	...	...	...	...	...	...	...	...	30
R-103	...	...	...	...	...	...	...	...	...	...	...	32
R-104	...	...	...	...	...	...	...	...	...	...	...	34
R-105	...	...	...	...	...	...	...	...	...	...	...	36

GENERAL NOTE: End flanges to API 6D and API 600 use gaskets for equivalent pipe size under ASME B16.5 or ASME B16.47 series A.

NOTES:
(1) Class 720, 960, and 10000 flanges to API 6B are obsolete. Data are for information only.
(2) R-30 is for lapped joint only.

Copyright ASME International
Provided by IHS under license with ASME
No reproduction or networking permitted without license from IHS
Not for Resale

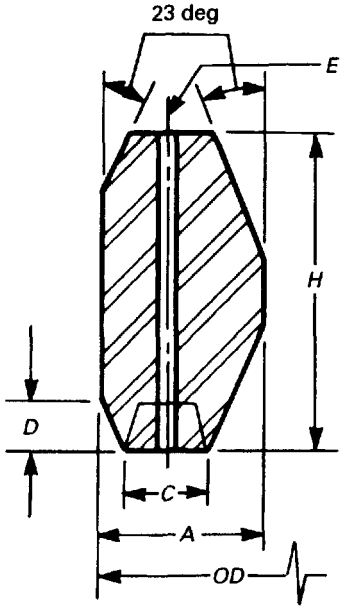

TABLE 5 TYPE RX RING GASKET DIMENSIONS AND TOLERANCES

Ring Number	Outside Diameter of Ring, *OD*	Width of Ring, *A*	Width of Flat, *C*	Height of Outside Bevel, *D*	Height of Ring, *H*	Radius of Ring, R_1	Hole Size, *E* (1)
RX-20	3.000	0.344	0.182	0.125	0.750	0.06	...
RX-23	3.672	0.469	0.254	0.167	1.000	0.06	...
RX-24	4.172	0.469	0.254	0.167	1.000	0.06	...
RX-25	4.313	0.344	0.182	0.125	0.750	0.06	...
RX-26	4.406	0.469	0.254	0.167	1.000	0.06	...
RX-27	4.656	0.469	0.254	0.167	1.000	0.06	...
RX-31	5.297	0.469	0.254	0.167	1.000	0.06	...
RX-35	5.797	0.469	0.254	0.167	1.000	0.06	...
RX-37	6.297	0.469	0.254	0.167	1.000	0.06	...
RX-39	6.797	0.469	0.254	0.167	1.000	0.06	...
RX-41	7.547	0.469	0.254	0.167	1.000	0.06	...
RX-44	8.047	0.469	0.254	0.167	1.000	0.06	...
RX-45	8.734	0.469	0.254	0.167	1.000	0.06	...
RX-46	8.750	0.531	0.263	0.188	1.125	0.06	...
RX-47	9.656	0.781	0.407	0.271	1.625	0.09	...
RX-49	11.047	0.469	0.254	0.167	1.000	0.06	...
RX-50	11.156	0.656	0.335	0.208	1.250	0.06	...
RX-53	13.172	0.469	0.254	0.167	1.000	0.06	...
RX-54	13.281	0.656	0.335	0.208	1.250	0.06	...
RX-57	15.422	0.469	0.254	0.167	1.000	0.06	...
RX-63	17.391	1.063	0.582	0.333	2.000	0.09	...
RX-65	18.922	0.469	0.254	0.167	1.000	0.06	...
RX-66	18.031	0.656	0.335	0.208	1.250	0.06	...
RX-69	21.422	0.469	0.254	0.167	1.000	0.06	...
RX-70	21.656	0.781	0.407	0.271	1.625	0.09	...

(continued)

Copyright ASME International
Provided by IHS under license with ASME
No reproduction or networking permitted without license from IHS
Not for Resale

TABLE 5 TYPE RX RING GASKET DIMENSIONS AND TOLERANCES (CONT'D)

Ring Number	Outside Diameter of Ring, *OD*	Width of Ring, *A*	Width of Flat, *C*	Height of Outside Bevel, *D*	Height of Ring, *H*	Radius of Ring, R_1	Hole Size, *E* (1)
RX-73	23.469	0.531	0.263	0.208	1.250	0.06	...
RX-74	23.656	0.781	0.407	0.271	1.625	0.09	...
RX-82	2.672	0.469	0.254	0.167	1.000	0.06	0.06
RX-84	2.922	0.469	0.254	0.167	1.000	0.06	0.06
RX-85	3.547	0.531	0.263	0.167	1.000	0.06	0.06
RX-86	4.078	0.594	0.335	0.188	1.125	0.06	0.09
RX-87	4.453	0.594	0.335	0.188	1.125	0.06	0.09
RX-88	5.484	0.688	0.407	0.208	1.250	0.06	0.12
RX-89	5.109	0.719	0.407	0.208	1.250	0.06	0.12
RX-90	6.875	0.781	0.479	0.292	1.750	0.09	0.12
RX-91	11.297	1.188	0.780	0.297	1.781	0.09	0.12
RX-99	9.672	0.469	0.254	0.167	1.000	0.06	...
RX-201	2.026	0.226	0.126	0.057	0.445	0.02 (3)	...
RX-205	2.453	0.219	0.120	0.072 (2)	0.437	0.02 (3)	...
RX-210	3.844	0.375	0.213	0.125 (2)	0.750	0.03 (3)	...
RX-215	5.547	0.469	0.210	0.167 (2)	1.000	0.06 (3)	...

GENERAL NOTE: All dimensions are in inches.

NOTES:

(1) Rings RX-82 through RX-91 only require one pressure passage hole as illustrated. The center line of the hole shall be located at the midpoint of dimension *C*.

(2) Tolerance on these dimensions is +0, −0.015.

(3) Tolerance on these dimensions is +0.02, −0.

TOLERANCES:

OD = outside diameter of ring, +0.020, −0

A = width of ring, +0.008, −0
Variation in width throughout the entire circumference of any ring shall not exceed 0.004 within these tolerances.

C = width of flat, +0.006, −0

D = height of outside bevel, +0, −0.03

H = height of ring, +0.008, −0
Variation in height throughout the entire circumference of any ring shall not exceed 0.004 within these tolerances.

R_1 = radius of ring, ±0.02

23 deg = angle, $\pm\frac{1}{2}$ deg

E = hole size, ±0.02

Copyright ASME International
Provided by IHS under license with ASME
No reproduction or networking permitted without license from IHS
Not for Resale

TABLE 6 PIPE SIZES FOR TYPE RX RING GASKETS SUITABLE FOR REFERENCED STANDARDS

	Pressure Classes			
	API 6B			
Ring Number	720–960 2000 (1)	2900 (1)	3000	5000
RX-20	1½	...	1½	1½
RX-23	2	...	...	...
RX-24	...	...	2	2
RX-25	...	...	...	3⅛
RX-26	2½	...	...	...
RX-27	...	...	2½	2½
RX-31	3	...	3	...
RX-35	...	...	...	3
RX-37	4	...	4	...
RX-39	...	...	...	4
RX-41	5	...	5	...
RX-44	...	...	...	5
RX-45	6	...	6	...
RX-46	...	...	...	6
RX-47	...	...	...	8 (2)
RX-49	8	...	8	...
RX-50	...	...	...	8
RX-53	10	...	10	...
RX-54	...	...	...	10
RX-57	12	...	12	...
RX-63	...	...	...	14
RX-65	16	...	...	...
RX-66	...	...	16	...
RX-69	18	...	...	...
RX-70	...	...	18	...
RX-73	20	...	...	...
RX-74	...	...	20	...
RX-82	...	1	...	...
RX-84	...	1½	...	...
RX-85	...	2	...	...
RX-86	...	2½	...	...
RX-87	...	3	...	...
RX-88	...	4	...	...
RX-89	...	3½	...	...
RX-90	...	5	...	...
RX-91	...	10	...	...
RX-99	8 (2)	...	8 (2)	...
RX-201	...	...	...	1⅜
RX-205	...	...	...	1 13/16
RX-210	...	...	...	2 9/16
RX-215	...	...	...	4 1/16

NOTES:
(1) Class 720, 960, and 2900 flanges to API 6B are obsolete. Data are for information only.
(2) Crossover flange connection.

Copyright ASME International
Provided by IHS under license with ASME
No reproduction or networking permitted without license from IHS Not for Resale

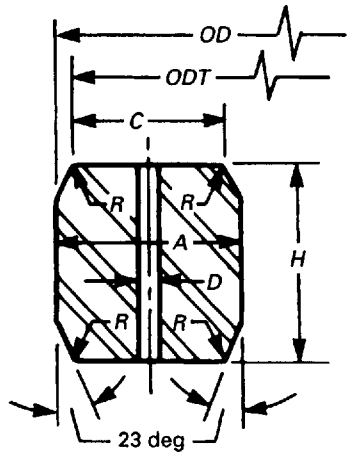

TABLE 7 TYPE BX RING GASKET DIMENSIONS AND TOLERANCES

Ring Number	Nominal Size, in.	Outside Diameter of Ring, *OD*	Height of Ring, *H*	Width of Ring, *A*	Outside Diameter of Flat, *ODT*	Width of Flat, *C*	Hole Size, *D* (1)
BX-150	1 11/16	2.842	0.366	0.366	2.790	0.314	0.06
BX-151	1 13/16	3.008	0.379	0.379	2.954	0.325	0.06
BX-152	2 1/16	3.334	0.403	0.403	3.277	0.346	0.06
BX-153	2 9/16	3.974	0.448	0.448	3.910	0.385	0.06
BX-154	3 1/16	4.600	0.488	0.488	4.531	0.419	0.06
BX-155	4 1/16	5.825	0.560	0.560	5.746	0.481	0.06
BX-156	7 1/16	9.367	0.733	0.733	9.263	0.629	0.12
BX-157	9	11.593	0.826	0.826	11.476	0.709	0.12
BX-158	11	13.860	0.911	0.911	13.731	0.782	0.12
BX-159	13 5/8	16.800	1.012	1.012	16.657	0.869	0.12
BX-160	13 5/8	15.850	0.938	0.541	15.717	0.408	0.12
BX-161	16 5/8	19.347	1.105	0.638	19.191	0.482	0.12
BX-162	16 5/8	18.720	0.560	0.560	18.641	0.481	0.06
BX-163	18 3/4	21.896	1.185	0.684	21.728	0.516	0.12
BX-164	18 3/4	22.463	1.185	0.968	22.295	0.800	0.12
BX-165	21 1/4	24.595	1.261	0.728	24.417	0.550	0.12
BX-166	21 1/4	25.198	1.261	1.029	25.020	0.851	0.12
BX-167	26 3/4	29.896	1.412	0.516	29.696	0.316	0.06
BX-168	26 3/4	30.128	1.412	0.632	29.928	0.432	0.06
BX-169	5 1/8	6.831	0.624	0.509	6.743	0.421	0.06
BX-170	6 5/8	8.584	0.560	0.560	8.505	0.481	0.06
BX-171	8 9/16	10.529	0.560	0.560	10.450	0.481	0.06
BX-172	11 5/32	13.113	0.560	0.560	13.034	0.481	0.06
BX-303	30	33.573	1.494	0.668	33.361	0.457	0.06

GENERAL NOTES:
(a) All dimensions are in inches.
(b) Radius *R* shall be 8% to 12% of the gasket height *H*.

(continued)

Copyright ASME International
Provided by IHS under license with ASME
No reproduction or networking permitted without license from IHS
Not for Resale

NOTES TO TABLE 7 (CONT'D)

NOTE:
(1) One pressure passage hole is required per gasket as illustrated. The center line of the hole shall be located at the midpoint of dimension *C*.

TOLERANCES:

OD = (outside diameter of ring) +0, −0.005
H = (height of ring) +0.008, −0
Variation in height throughout the entire circumference of any ring shall not exceed 0.004 within these tolerances.
A = (width of ring) +0.008, −0
Variation in width throughout the entire circumference of any ring shall not exceed 0.004 within these tolerances.
ODT = (outside diameter of flat) ±0.002
C = (width of flat) +0.006, −0
D = (hole size) ±0.02
R = (radius of ring) see General Note (b)
23 deg = (angle) ±1/4 deg

TABLE 8 PIPE SIZES FOR TYPE BX RING GASKETS SUITABLE FOR REFERENCED STANDARDS

Ring Number	Pressure Classes					
	API 6BX					
	2000	3000	5000	10000	15000	20000
BX-150	...	...	...	1 11/16	1 11/16	...
BX-151	...	...	...	1 13/16	1 13/16	1 13/16
BX-152	...	...	...	2 1/16	2 1/16	2 1/16
BX-153	...	...	...	2 9/16	2 9/16	2 9/16
BX-154	...	...	...	3 1/16	3 1/16	3 1/16
BX-155	...	...	...	4 1/16	4 1/16	4 1/16
BX-156	...	...	...	7 1/16	7 1/16	7 1/16
BX-157	...	...	...	9	9	9
BX-158	...	...	...	11	11	11
BX-159	...	...	...	13 5/8	13 5/8	13 5/8
BX-160	...	...	13 5/8	...	...	...
BX-161	...	...	16 3/4	...	...	...
BX-162	...	...	16 3/4	16 3/4	16 3/4	...
BX-163	...	...	18 3/4	...	...	...
BX-164	...	...	...	18 3/4	18 3/4	...
BX-165	...	...	21 1/4	...	...	...
BX-166	...	...	...	21 1/4	...	...
BX-167	26 3/4	...	...	...	...	...
BX-168	...	26 3/4	...	...	...	...
BX-169	...	...	...	5 1/8	...	...
BX-170	...	...	...	6 5/8	6 5/8	...
BX-171	...	...	...	8 9/16	8 9/16	...
BX-172	...	...	...	11 5/32	11 5/32	...
BX-303	30	30	...	...	...	...

Copyright ASME International
Provided by IHS under license with ASME
No reproduction or networking permitted without license from IHS
Not for Resale

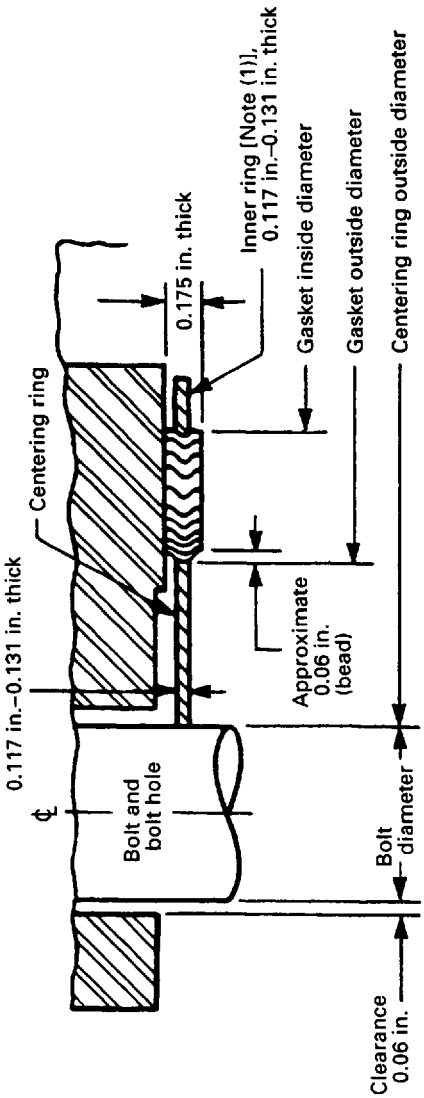

TABLE 9 ILLUSTRATION

Copyright ASME International
Provided by IHS under license with ASME
No reproduction or networking permitted without license from IHS
Not for Resale

Copyright ASME International
Provided by IHS under license with ASME
No reproduction or networking permitted without license from IHS

TABLE 9 DIMENSIONS FOR SPIRAL-WOUND GASKETS USED WITH ASME B16.5 FLANGES

Flange Size (NPS)	Outside Diameter of Gasket (2)		Inside Diameter of Gasket by Class (3)							Outside Diameter of Centering Ring by Class (4)						
	Classes 150, 300, 400, 600	Classes 900, 1500, 2500	150	300	400 (5)	600	900 (1, 5)	1500 (1)	2500 (1, 5)	150	300	400 (5)	600	900 (5)	1500	2500 (5)
½	1.25	1.25	0.75	0.75	...	0.75	...	0.75	0.75	1.88	2.13	...	2.13	...	2.50	2.75
¾	1.56	1.56	1.00	1.00	...	1.00	...	1.00	1.00	2.25	2.63	...	2.63	...	2.75	3.00
1	1.88	1.88	1.25	1.25	...	1.25	...	1.25	1.25	2.63	2.88	...	2.88	...	3.13	3.38
1¼	2.38	2.38	1.88	1.88	...	1.88	...	1.56	1.56	3.00	3.25	...	3.25	...	3.50	4.13
1½	2.75	2.75	2.13	2.13	...	2.13	...	1.88	1.88	3.38	3.75	...	3.75	...	3.88	4.63
2	3.38	3.38	2.75	2.75	...	2.75	...	2.31	2.31	4.13	4.38	...	4.38	...	5.63	5.75
2½	3.88	3.88	3.25	3.25	...	3.25	...	2.75	2.75	4.88	5.13	...	5.13	...	6.50	6.63
3	4.75	4.75	4.00	4.00	...	4.00	3.75	3.63	3.63	5.38	5.88	...	5.88	6.63	6.88	7.75
4	5.88	5.88	5.00	5.00	4.75	4.75	4.75	4.63	4.63	6.88	7.13	7.00	7.63	8.13	8.25	9.25
5	7.00	7.00	6.13	6.13	5.81	5.81	5.81	5.63	5.63	7.75	8.50	8.38	9.50	9.75	10.00	11.00
6	8.25	8.25	7.19	7.19	6.88	6.88	6.88	6.75	6.75	8.75	9.88	9.75	10.50	11.38	11.13	12.50
8	10.38	10.13	9.19	9.19	8.88	8.88	8.75	8.50	8.50	11.00	12.13	12.00	12.63	14.13	13.88	15.25
10	12.50	12.25	11.31	11.31	10.81	10.81	10.88	10.50	10.63	13.38	14.25	14.13	15.75	17.13	17.13	18.75
12	14.75	14.50	13.38	13.38	12.88	12.88	12.75	12.75	12.50	16.13	16.63	16.50	18.00	19.63	20.50	21.63
14	16.00	15.75	14.63	14.63	14.25	14.25	14.00	14.25	...	17.75	19.13	19.00	19.38	20.50	22.75	...
16	18.25	18.00	16.63	16.63	16.25	16.25	16.25	16.00	...	20.25	21.25	21.13	22.25	22.63	25.25	...
18	20.75	20.50	18.69	18.69	18.50	18.50	18.25	18.25	...	21.63	23.50	23.38	24.13	25.13	27.75	...
20	22.75	22.50	20.69	20.69	20.50	20.50	20.50	20.25	...	23.88	25.75	25.50	26.88	27.50	29.75	...
24	27.00	26.75	24.75	24.75	24.75	24.75	24.75	24.25	...	28.25	30.50	30.25	31.13	33.00	35.50	...

GENERAL NOTES:
(a) For reference, see Table 9 illustration beginning on previous page.
(b) The gasket–thickness tolerance is ±0.005 in. measured across the metallic portion of the gasket not including the filler, which may protrude slightly beyond the metal.
(c) For limitations on the maximum flange bore for use with these spiral-wound gaskets, see Table 16.

NOTES:
(1) Inner rings are required for all PTFE filled gaskets and for Class 900 gaskets, NPS 24; Class 1500 gaskets, NPS 12 through NPS 24; and Class 2500 gaskets, NPS 4 through NPS 12 (see para. 3.2.5 and Table 12).
(2) The gasket outside diameter tolerance for NPS ½ through NPS 8 is ±0.03 in.; for NPS 10 through NPS 24, +0.06 in., −0.03 in.
(3) The gasket inside diameter tolerance for NPS ½ through NPS 8 is ±0.016 in.; for NPS 10 through NPS 24, ±0.03 in.
(4) The centering ring outside diameter tolerance is ±0.03 in.
(5) There are no Class 400 flanges in NPS ½ through NPS 3 (use Class 600), Class 900 flanges in NPS ½ through NPS 2½ (use Class 1500), or Class 2500 flanges NPS 14 and larger.

Not for Resale

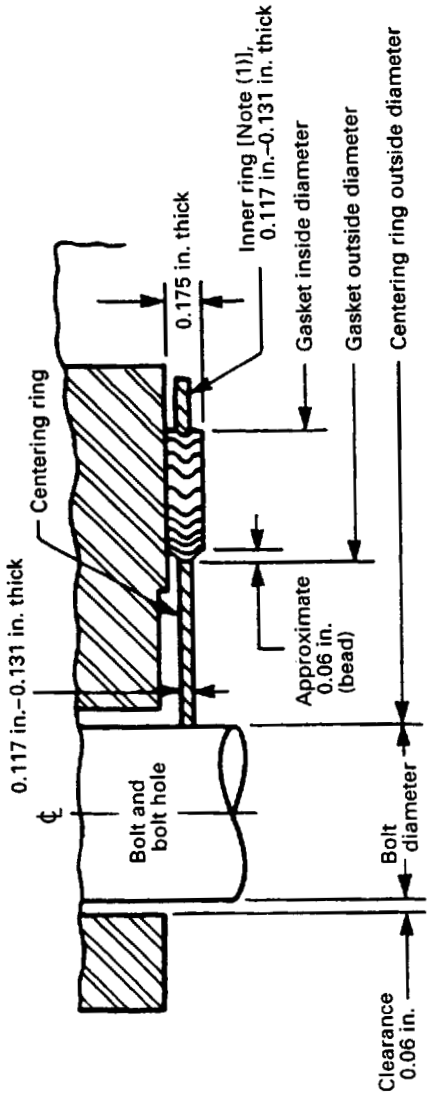

TABLE 10 ILLUSTRATION

Copyright ASME International
Provided by IHS under license with ASME
No reproduction or networking permitted without license from IHS
Not for Resale

Copyright ASME International
Provided by IHS under license with ASME
No reproduction or networking permitted without license from IHS

TABLE 10 DIMENSIONS FOR SPIRAL-WOUND GASKETS USED WITH ASME B16.47 SERIES A FLANGES

	Class 150			Class 300			Class 400			Class 600			Class 900 (1)		
	Gasket		Centering Ring	Gasket		Centering Ring	Gasket		Centering Ring	Gasket		Centering Ring	Gasket		Centering Ring
Flange Size (NPS)	Inside Diameter (2)	Outside Diameter (3)	Outside Diameter (4)	Inside Diameter (2)	Outside Diameter (3)	Outside Diameter (4)	Inside Diameter (2)	Outside Diameter (3)	Outside Diameter (4)	Inside Diameter (2)	Outside Diameter (3)	Outside Diameter (4)	Inside Diameter (2, 5)	Outside Diameter (3, 5)	Outside Diameter (4, 5)
26	26.50	27.75	30.50	27.00	29.00	32.88	27.00	29.00	32.75	27.00	29.00	34.13	27.00	29.00	34.75
28	28.50	29.75	32.75	29.00	31.00	35.38	29.00	31.00	35.13	29.00	31.00	36.00	29.00	31.00	37.25
30	30.50	31.75	34.75	31.25	33.25	37.50	31.25	33.25	37.25	31.25	33.25	38.25	31.25	33.25	39.75
32	32.50	33.88	37.00	33.50	35.50	39.63	33.50	35.50	39.50	33.50	35.50	40.25	33.50	35.50	42.25
34	34.50	35.88	39.00	35.50	37.50	41.63	35.50	37.50	41.50	35.50	37.50	42.25	35.50	37.50	44.75
36	36.50	38.13	41.25	37.63	39.63	44.00	37.63	39.63	44.00	37.63	39.63	44.50	37.75	39.75	47.25
38	38.50	40.13	43.75	38.50	40.00	41.50	38.25	40.25	42.25	39.00	41.00	43.50	40.75	42.75	47.25
40	40.50	42.13	45.75	40.25	42.13	43.88	40.38	42.38	44.38	41.25	43.25	45.50	43.25	45.25	49.25
42	42.50	44.25	48.00	42.25	44.13	45.88	42.38	44.38	46.38	43.50	45.50	48.00	45.25	47.25	51.25
44	44.50	46.38	50.25	44.50	46.50	48.00	44.50	46.50	48.50	45.75	47.75	50.00	47.50	49.50	53.88
46	46.50	48.38	52.25	46.38	48.38	50.13	47.00	49.00	50.75	47.75	49.75	52.25	50.00	52.00	56.50
48	48.50	50.38	54.50	48.63	50.63	52.13	49.00	51.00	53.00	50.00	52.00	54.75	52.00	54.00	58.50
50	50.50	52.50	56.50	51.00	53.00	54.25	51.00	53.00	55.25	52.00	54.00	57.00	...	...	...
52	52.50	54.50	58.75	53.00	55.00	56.25	53.00	55.00	57.25	54.00	56.00	59.00	...	...	...
54	54.50	56.50	61.00	55.25	57.25	58.75	55.25	57.25	59.75	56.25	58.25	61.25	...	...	...
56	56.50	58.50	63.25	57.25	59.25	60.75	57.25	59.25	61.75	58.25	60.25	63.50	...	...	...
58	58.50	60.50	65.50	59.50	61.50	62.75	59.25	61.25	63.75	60.50	62.50	65.50	...	...	...
60	60.50	62.50	67.50	61.50	63.50	64.75	61.75	63.75	66.25	62.75	64.75	68.25	...	...	...

GENERAL NOTES:
(a) For reference, see Table 10 illustration beginning on previous page.
(b) The gasket-thickness tolerance is ±0.005 in. measured across the metallic portion of the gasket not including the filler, which may protrude slightly beyond the metal.
(c) For limitations on the maximum flange bore for use with these spiral-wound gaskets, see Table 17.
(d) ASME B16.47 Series A flanges NPS 12 through NPS 24 have the same raised face dimensions as ASME B16.5 flanges.

NOTES:
(1) Inner rings are required for all PTFE gaskets and Class 900 gaskets, NPS 26 through NPS 48 (see para. 3.2.5 and Table 13).
(2) The gasket inside diameter tolerance for NPS 26 through NPS 34 is ±0.03 in., and the tolerance for NPS 36 through NPS 60 is ±0.05 in.
(3) The gasket outside diameter tolerance for NPS 26 through NPS 60 is ±0.06 in.
(4) The centering ring outside diameter tolerance is ±0.03 in.
(5) There are no Class 900 flanges NPS 50 and larger.

Not for Resale

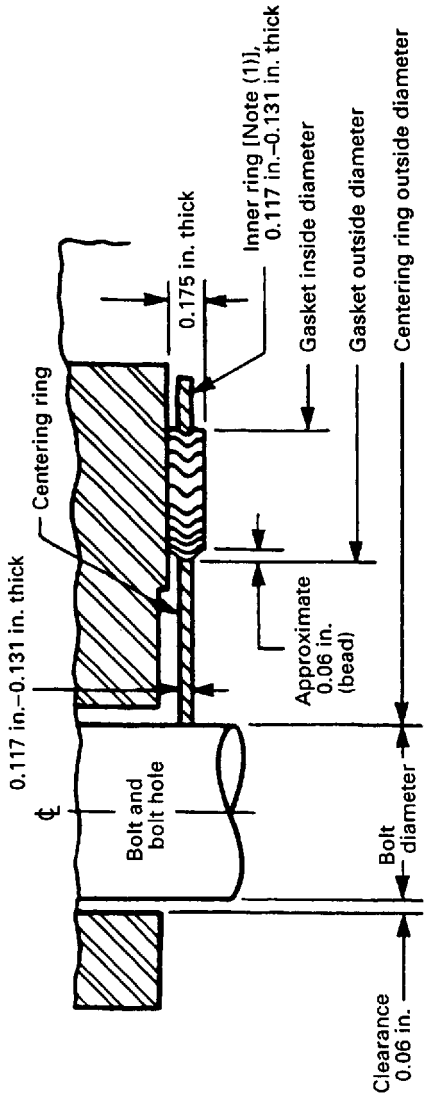

TABLE 11 ILLUSTRATION

Copyright ASME International
Provided by IHS under license with ASME
No reproduction or networking permitted without license from IHS
Not for Resale

Copyright ASME International
Provided by IHS under license with ASME
No reproduction or networking permitted without license from IHS

TABLE 11 DIMENSIONS FOR SPIRAL-WOUND GASKETS USED WITH ASME B16.47 SERIES B FLANGES

	Class 150			Class 300			Class 400			Class 600			Class 900 (1)		
	Gasket		Centering Ring	Gasket		Centering Ring	Gasket		Centering Ring	Gasket		Centering Ring	Gasket		Centering Ring
Flange Size (NPS)	Inside Diameter (2)	Outside Diameter (3)	Outside Diameter (4)	Inside Diameter (2)	Outside Diameter (3)	Outside Diameter (4)	Inside Diameter (2)	Outside Diameter (3)	Outside Diameter (4)	Inside Diameter (2)	Outside Diameter (3)	Outside Diameter (4)	Inside Diameter (2, 5)	Outside Diameter (3, 5)	Outside Diameter (4, 5)
26	26.50	27.50	28.56	26.50	28.00	30.38	26.25	27.50	29.38	26.13	28.13	30.13	27.25	29.50	33.00
28	28.50	29.50	30.56	28.50	30.00	32.50	28.13	29.50	31.50	27.75	29.75	32.25	29.25	31.50	35.50
30	30.50	31.50	32.56	30.50	32.00	34.88	30.13	31.75	33.75	30.63	32.63	34.63	31.75	33.75	37.75
32	32.50	33.50	34.69	32.50	34.00	37.00	32.00	33.88	35.88	32.75	34.75	36.75	34.00	36.00	40.00
34	34.50	35.75	36.81	34.50	36.00	39.13	34.13	35.88	37.88	35.00	37.00	39.25	36.25	38.25	42.25
36	36.50	37.75	38.88	36.50	38.00	41.25	36.13	38.00	40.25	37.00	39.00	41.25	37.25	39.25	44.25
38	38.37	39.75	41.13	39.75	41.25	43.25	38.25	40.25	42.25	39.00	41.00	43.50	40.75	42.75	47.25
40	40.25	41.88	43.13	41.75	43.25	45.25	40.38	42.38	44.38	41.25	43.25	45.50	43.25	45.25	49.25
42	42.50	43.88	45.13	43.75	45.25	47.25	42.38	44.38	46.38	43.50	45.50	48.00	45.25	47.25	51.25
44	44.25	45.88	47.13	45.75	47.25	49.25	44.50	46.50	48.50	45.75	47.75	50.00	47.50	49.50	53.88
46	46.50	48.19	49.44	47.88	49.38	51.88	47.00	49.00	50.75	47.75	49.75	52.25	50.00	52.00	56.50
48	48.50	50.00	51.44	49.75	51.63	53.88	49.00	51.00	53.00	50.00	52.00	54.75	52.00	54.00	58.50
50	50.50	52.19	53.44	51.88	53.38	55.88	51.00	53.00	55.25	52.00	54.00	57.00	...	...	...
52	52.50	54.19	55.44	53.88	55.38	57.88	53.00	55.00	57.25	54.00	56.00	59.00	...	...	...
54	54.50	56.00	57.63	55.25	57.25	60.25	55.25	57.25	59.75	56.25	58.25	61.25	...	...	...
56	56.88	58.18	59.63	58.25	60.00	62.75	57.25	59.25	61.75	58.25	60.25	63.50	...	...	...
58	59.07	60.19	62.19	60.44	61.94	65.19	59.25	61.25	63.75	60.50	62.50	65.50	...	...	...
60	61.31	62.44	64.19	62.56	64.19	67.19	61.75	63.75	66.25	62.75	64.75	68.25	...	...	...

GENERAL NOTES:
(a) For reference, see Table 11 illustration beginning on previous page.
(b) The gasket–thickness tolerance is ±0.005 in. measured across the metallic portion of the gasket not including the filler, which may protrude slightly beyond the metal.
(c) For limitations on the maximum flange bore for use with these spiral-wound gaskets, see Table 18.

NOTES:
(1) Inner rings are required for all PTFE gaskets and for Class 900 gaskets, NPS 26 through NPS 48 (see para. 3.2.5 and Table 14).
(2) The gasket inside diameter tolerance for NPS 26 through NPS 34 is ±0.03 in., and the tolerance for NPS 36 through NPS 60 is ±0.05 in.
(3) The gasket outside diameter tolerance for NPS 26 through NPS 60 is ±0.06 in.
(4) The centering ring outside diameter tolerance is ±0.03 in.
(5) There are no Class 900 flanges NPS 50 and larger.

Not for Resale

TABLE 12 INNER-RING INSIDE DIAMETERS FOR SPIRAL-WOUND GASKETS (a)

Flange Size (NPS)	Pressure Class						
	150	300	400 (1)	600	900 (1, 2)	1500 (2, 3)	2500 (1–3)
½	0.56	0.56	...	0.56	...	0.56	0.56
¾	0.81	0.81	...	0.81	...	0.81	0.81
1	1.06	1.06	...	1.06	...	1.06	1.06
1¼	1.50	1.50	...	1.50	...	1.31	1.31
1½	1.75	1.75	...	1.75	...	1.63	1.63
2	2.19	2.19	...	2.19	...	2.06	2.06
2½	2.62	2.62	...	2.62	...	2.50	2.50
3	3.19	3.19	...	3.10	3.10	3.10	3.10
4	4.19	4.19	4.04	4.04	4.04	3.85	3.85
5	5.19	5.19	5.05	5.05	5.05	4.90	4.90
6	6.19	6.19	6.10	6.10	6.10	5.80	5.80
8	8.50	8.50	8.10	8.10	7.75	7.75	7.75
10	10.56	10.56	10.05	10.05	9.69	9.69	9.69
12	12.50	12.50	12.10	12.10	11.50	11.50	11.50
14	13.75	13.75	13.50	13.50	12.63	12.63	...
16	15.75	15.75	15.35	15.35	14.75	14.50	...
18	17.69	17.69	17.25	17.25	16.75	16.75	...
20	19.69	19.69	19.25	19.25	19.00	18.75	...
24	23.75	23.75	23.25	23.25	23.25	22.75	...

GENERAL NOTES:

(a) The inner-ring thickness shall be 0.117 in. to 0.131 in.

(b) For sizes NPS 1¼ through NPS 3, the inside diameter tolerance is ±0.03 in.; for larger sizes the inside diameter tolerance is ±0.06 in. See Table 15 for minimum pipe wall thicknesses that are suitable for use with standard inner rings.

NOTES:

(1) There are no
  (a) NPS ½ through NPS 3 Class 400 flanges; therefore, use Class 600 flanges
  (b) NPS ½ through NPS 2½ Class 900 flanges; therefore, use Class 1500 flanges
  (c) NPS 14 and larger Class 2500 flanges

(2) Inner rings are required for Class 900, NPS 24 gaskets; Class 1500, NPS 12 through NPS 24 gaskets; and Class 2500, NPS 4 through NPS 12 gaskets.

(3) Refer to para. 3.2.5 for required use of inner rings.

Copyright ASME International
Provided by IHS under license with ASME
No reproduction or networking permitted without license from IHS Not for Resale

TABLE 13 INNER-RING INSIDE DIAMETERS FOR SPIRAL-WOUND GASKETS USED BETWEEN ASME B16.47 SERIES A FLANGES

Flange Size (NPS)	Pressure Class				
	150	300	400	600	900 (1, 2)
26	25.75	25.75	26.00	25.50	26.00
28	27.75	27.75	28.00	27.50	28.00
30	29.75	29.75	29.75	29.75	30.25
32	31.75	31.75	32.00	32.00	32.00
34	33.75	33.75	34.00	34.00	34.00
36	35.75	35.75	36.13	36.13	36.25
38	37.75	37.50	37.50	37.50	39.75
40	39.75	39.50	39.38	39.75	41.75
42	41.75	41.50	41.38	42.00	43.75
44	43.75	43.50	43.50	43.75	45.50
46	45.75	45.38	46.00	45.75	48.00
48	47.75	47.63	47.50	48.00	50.00
50	49.75	49.00	49.50	50.00	. . .
52	51.75	52.00	51.50	52.00	. . .
54	53.50	53.25	53.25	54.25	. . .
56	55.50	55.25	55.25	56.25	. . .
58	57.50	57.00	57.25	58.00	. . .
60	59.50	60.00	59.75	60.25	. . .

GENERAL NOTES:
(a) The inner-ring thickness shall be 0.117 in. to 0.131 in.
(b) The inside diameter tolerance is ±0.12 in.
(c) These inner rings are suitable for use with pipe walls 0.38 in. or thicker.

NOTES:
(1) Inner rings are required for Class 900 gaskets.
(2) There are no Class 900 flanges NPS 50 and larger.

Copyright ASME International
Provided by IHS under license with ASME
No reproduction or networking permitted without license from IHS
Not for Resale

TABLE 14 INNER-RING INSIDE DIAMETERS FOR SPIRAL-WOUND GASKETS USED BETWEEN ASME B16.47 SERIES B FLANGES (a)

Flange Size (NPS)	Pressure Class				
	150	300	400	600	900 (1, 2)
26	25.75	25.75	25.75	25.38	26.25
28	27.75	27.75	27.63	27.00	28.25
30	29.75	29.75	29.63	29.63	30.75
32	31.75	31.75	31.50	31.25	33.00
34	33.75	33.75	33.50	33.50	35.25
36	35.75	35.75	35.38	35.50	36.25
38	37.75	38.25	37.50	37.50	39.75
40	39.75	40.25	39.38	39.75	41.75
42	41.75	42.75	41.38	42.00	43.75
44	43.75	44.25	43.50	43.75	45.50
46	45.75	46.38	46.00	45.75	48.00
48	47.75	48.50	47.50	48.00	50.00
50	49.75	49.88	49.50	50.00	...
52	51.75	51.88	51.50	52.00	...
54	53.75	53.75	53.25	54.25	...
56	56.00	56.25	55.25	56.25	...
58	58.19	58.44	57.25	58.00	...
60	60.44	61.31	59.75	60.25	...

GENERAL NOTES:
(a) The inner-ring thickness shall be 0.117 in. to 0.131 in.
(b) The inside diameter tolerance is ±0.12 in.
(c) These inner rings are suitable for use with pipe walls 0.375 in. or thicker.

NOTES:
(1) Inner rings are required for Class 900 gaskets. Refer to para. 3.2.5 for required use of inner rings.
(2) There are no NPS 50 and larger Class 900 flanges.

Copyright ASME International
Provided by IHS under license with ASME
No reproduction or networking permitted without license from IHS Not for Resale

(a) **TABLE 15 MINIMUM PIPE WALL THICKNESS SUITABLE FOR USE OF SPIRAL-WOUND GASKETS WITH INNER RINGS FOR ASME B16.5 FLANGES**

Flange Size (NPS)	Pressure Class						
	150	300	400	600	900	1500	2500
½, ¾, 1	Schedule 80						
1¼, 1½, 2, 2½, 3	Schedule 40						
4, 5, 6	Schedule 40					Schedule 80	
8, 10, 12, 14, 16, 18, 20, 24	Schedule 10S		Schedule 30		Schedule 80		

GENERAL NOTES:
(a) The pipe wall schedules identified represent the minimum recommended pipe wall thickness suitable for use with inner rings for ASME B16.5 flanges. (Reference ASME B36.10M and B36.19M.)
(b) Gaskets with inner rings should be used only with socket welding, lapped, welding neck, and integral flanges.

Copyright ASME International
Provided by IHS under license with ASME
No reproduction or networking permitted without license from IHS
Not for Resale

TABLE 16 MAXIMUM BORE OF ASME B16.5 FLANGES FOR USE WITH SPIRAL-WOUND GASKETS

<table>
<tr><th rowspan="2">Flange Size (NPS)</th><th colspan="8">Pressure Class</th></tr>
<tr><th>75</th><th>150</th><th>300</th><th>400</th><th>600</th><th>900 (1)</th><th>1500 (1)</th><th>2500 (1)</th></tr>
<tr><td>½
¾
1</td><td rowspan="13">No flanges</td><td colspan="2" rowspan="2">WN flange only (2)</td><td rowspan="3">No flanges
Use Class 600</td><td>WN flange only (2)</td><td rowspan="3">No flanges
Use Class 1500</td><td colspan="2" rowspan="3">WN flange only (2)</td></tr>
<tr><td>1¼
1½</td><td colspan="2">SO flange (3)
WN flange (2)</td><td>SO flange (3)
WN flange (2)</td></tr>
<tr><td>2
2½</td><td colspan="2">SO flange (3)
WN flange, any bore</td><td>SO flange (3)
WN flange, any bore</td></tr>
<tr><td>3</td><td rowspan="6" colspan="2">SO flange
WN flange, any bore</td><td>SO flange (3)
WN flange, any bore</td><td rowspan="2">WN flange with Schedule 10S bore described in ASME B36.19M [includes nozzle (4) but excludes SO flange]</td><td rowspan="2">WN flange with SW bore [includes nozzle (4) but excludes SO flange]</td></tr>
<tr><td>4
6</td><td rowspan="2">WN flange with Schedule 10S bore described in ASME B36.19M [includes nozzle (4) but excludes SO flange] (5)</td></tr>
<tr><td>8
10
12</td><td rowspan="3" colspan="2">WN flange with Schedule 80 bore [excludes nozzle (4) and SO flange] (5)</td><td rowspan="3">No flanges</td></tr>
<tr><td>14
16
18</td></tr>
<tr><td>20
24</td></tr>
</table>

GENERAL NOTES:
(a) This table shows the maximum bore of flanges for which the spiral-wound gasket dimensions shown in Table 9 are recommended considering the tolerances involved, possible eccentric installation, and the possibility that the gasket may extend into the assembled flange bore.
(b) For maximum permissible flange bores for nonmandatory inner rings, see Table 15.
(c) Abbreviations: SO = slip on and threaded WN = welding neck SW = standard wall

NOTES:
(1) Inner rings are required for Class 900 gaskets, NPS 24; Class 1500 gaskets, NPS 12 through NPS 24; and Class 2500 gaskets, NPS 4 through NPS 12 (see para. 3.2.5). These inner rings may extend into the pipe bore a maximum of 0.06 in. under the worst combination of maximum bore, eccentric installation, and additive tolerances.
(2) In these sizes the gasket is suitable for a welding neck flange with a standard wall bore, if the gasket and the flanges are assembled concentrically. This also applies to a nozzle. It is the user's responsibility to determine if the gasket is satisfactory for a flange of any larger bore.
(3) Gaskets in these sizes are suitable for slip-on flanges only if the gaskets and flanges are assembled concentrically.
(4) A *nozzle* is a long welding neck; the bore equals the flange NPS.
(5) An NPS 24 gasket is suitable for nozzles.

Copyright ASME International
Provided by IHS under license with ASME
No reproduction or networking permitted without license from IHS
Not for Resale

TABLE 17 MAXIMUM BORE OF ASME B16.47 SERIES A FLANGES FOR USE WITH SPIRAL-WOUND GASKETS

Flange Size (NPS)	Pressure Class				
	150	300	400	600	900 (1)
26	(2)	(3)	(3)	(3)	(3)
28	(2)	(3)	(3)	(3)	(3)
30	(2)	(3)	(3)	(3)	(3)
32	(2)	(3)	(3)	(3)	(3)
34	(2)	(3)	(3)	(3)	(3)
36	(2)	(3)	(3)	(3)	(3)
38	(2)	(3)	(3)	(3)	(3)
40	(2)	(3)	(3)	(3)	(3)
42	(2)	(3)	(3)	(3)	(3)
44	(2)	(3)	(3)	(3)	(3)
46	(2)	(3)	(3)	(3)	(3)
48	(2)	(3)	(3)	(3)	(3)
50	(2)	(3)	(3)	(3)	(4)
52	(2)	(3)	(3)	(3)	(4)
56	(2)	(3)	(3)	(3)	(4)
58	(2)	(3)	(3)	(3)	(4)
60	(2)	(3)	(3)	(3)	(4)

GENERAL NOTE: This table shows the maximum bore of flanges for which the spiral-wound gasket dimensions shown in Table 10 are recommended, considering the tolerances involved, the possibility of eccentric installation, and the possibility that the gasket may extend into the assembled flange bore.

NOTES:

(1) Inner rings are required for Class 900 gaskets, NPS 26 through NPS 48 (see para. 3.2.5).

(2) Applies only to welding neck flanges with a bore not larger than the inside diameter of a 0.187-in. wall pipe. Larger bores must be checked individually.

(3) Applies only to welding neck flanges with a bore not larger than the inside diameter of a 0.25-in. wall pipe, except that NPS 38, Class 300, is not suitable for a bore larger than the inside diameter of a 0.30-in. wall pipe. Larger bores must be checked individually.

(4) There are no Class 900 flanges in NPS 50 through 60.

Copyright ASME International
Provided by IHS under license with ASME
No reproduction or networking permitted without license from IHS
Not for Resale

TABLE 18 MAXIMUM BORE OF ASME B16.47 SERIES B FLANGES FOR USE WITH SPIRAL-WOUND GASKETS

Flange Size (NPS)	Pressure Class				
	150	300	400	600	900 (1)
26					
28					
30					
32					
34					
36					
38					
40	Welding neck and integral flanges having maximum inside diameters as described in ASME B16.47				
44					
46					
48					
50					(2)
52					(2)
54					(2)
56					(2)
58					(2)
60					(2)

GENERAL NOTE: This table shows the maximum bore of flanges for which the spiral-wound gasket dimensions shown in Table 11 are recommended, considering the tolerances involved, the possibility of eccentric installation, and the possibility that the gasket may extend into the assembled flange bore.

NOTES:

(1) Inner rings are required for Class 900 gaskets, NPS 26 through NPS 48 (see para. 3.2.5).

(2) There are no Class 900 flanges NPS 50 and larger.

Copyright ASME International
Provided by IHS under license with ASME
No reproduction or networking permitted without license from IHS Not for Resale

(a) TABLE 19 COLOR CODING AND ABBREVIATIONS FOR SPIRAL-WOUND GASKET MATERIALS

Metallic Winding Materials		
Material	**Abbreviation**	**Color Code**
Carbon steel	CRS	Silver
304 SS	304	Yellow
304 L SS	304 L	No color
309 SS	309	No color
310 SS	310	No color
316 L SS	316 L	Green
317 L SS	317 L	Maroon
347 SS	347	Blue
321 SS	321	Turquoise
430 SS	430	No color
Ni–Cu	...	...
Monel 400	MON	Orange
Grade 400	...	...
Nickel 200	NI	Red
Titanium	TI	Purple
20Cb-3 alloy	A-20	Black
Ni–Mo	...	...
Hastelloy B	HAST B	Brown
Grade B2	...	...
Ni–Mo–Cr	...	...
Hastelloy C	HAST C	Beige
Grade C-276	...	...
Ni–Cr–Fe	...	...
Inconel 600	INC 600	Gold
Grade 600	...	...
Ni–Cr–Fe–Cb	...	...
Inconel 625	INC 625	Gold
Grade 625	...	...
Ni–Cr–Fe–Ti	...	...
Inconel X-750	INX	No color
Grade X-750	...	...
Ni–Fe–Cr	...	...
Incoloy 800	IN 800	White
Grade 800	...	...
Ni–Fe–Cr–Mo–Cu	...	...
Incoloy 825	IN 825	White
Grade 825	...	...
Zirconium	ZIRC	No color

(*continued*)

Copyright ASME International
Provided by IHS under license with ASME
No reproduction or networking permitted without license from IHS Not for Resale

TABLE 19 COLOR CODING AND ABBREVIATIONS FOR SPIRAL-WOUND GASKET MATERIALS (CONT'D)

Nonmetallic Filler Materials		
Material	**Abbreviation**	**Color Code**
Chrysotile asbestos	ASB	No stripe
Polytetrafluoroethylene	PTFE	White stripe
Mica-graphite	Mfr.'s designation	Pink stripe
Flexible-graphite	F.G.	Gray stripe
Ceramic	CER	Light green stripe

TABLE 20 EXAMPLE MARKINGS FOR SPIRAL-WOUND GASKETS

Description	Marking
NPS 3, Class 300 and 600 ASME B16.5 gasket having a Type 304 metal winding and a flexible graphite filler material	3–300/600—F.G. (Manufacturer's trademark) ASME B16.20
NPS 36, Class 300 ASME B16.47 Series A gasket having a Type 304 metal winding and a ceramic filler material	36–300—CER ASME B16.47 A (Manufacturer's trademark) ASME B16.20
NPS 12, Class 1500 ASME B16.5 gasket having an inconel metal winding, PTFE filler material, and an inconel inner ring	12–1500 INC 600—PTFE INC 600 I.R. (Manufacturer's trademark) ASME B16.20

Copyright ASME International
Provided by IHS under license with ASME
No reproduction or networking permitted without license from IHS
Not for Resale

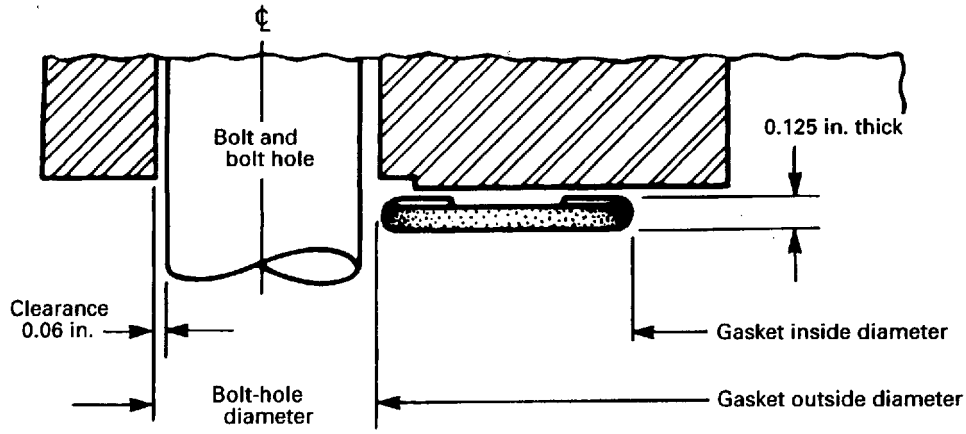

TABLE 21 JACKETED GASKET DIMENSIONS FOR ASME B16.5 FLANGES

Flange Size (NPS)	Gasket Inside Diameter (1)	Gasket Outside Diameter by Class (1)						
		150	300	400 (2)	600	900 (3)	1500	2500 (4)
½	0.88	1.75	2.00	...	2.00	...	2.38	2.63
¾	1.13	2.13	2.50	...	2.50	...	2.63	2.88
1	1.50	2.50	2.75	...	2.75	...	3.00	3.25
1¼	1.88	2.88	3.13	...	3.13	...	3.38	4.00
1½	2.13	3.25	3.63	...	3.63	...	3.75	4.50
2	2.88	4.00	4.25	...	4.25	...	5.50	5.63
2½	3.38	4.75	5.00	...	5.00	...	6.38	6.50
3	4.25	5.25	5.75	...	5.75	6.50	6.75	7.63
4	5.19	6.75	7.00	6.88	7.50	8.00	8.13	9.13
5	6.00	7.63	8.38	8.25	9.38	9.63	9.88	10.88
6	7.50	8.63	9.75	9.63	10.38	11.25	11.00	12.38
8	9.38	10.88	12.00	11.88	12.50	14.00	13.75	15.13
10	11.25	13.25	14.13	14.00	15.63	17.00	17.00	18.63
12	13.50	16.00	16.50	16.38	17.88	19.50	20.38	21.50
14	14.75	17.63	19.00	18.88	19.25	20.38	22.63	...
16	16.75	20.13	21.13	21.00	22.13	22.50	25.13	...
18	19.25	21.50	23.38	23.25	24.00	25.00	27.63	...
20	21.00	23.75	25.63	25.38	26.75	27.38	29.63	...
24	25.25	28.13	30.38	30.13	31.00	32.88	35.38	...

GENERAL NOTE: The gasket-thickness tolerance is +0.03 in., −0.000 in.

NOTES:
(1) For gaskets NPS ½ through NPS 24, the outside and inside diameter tolerances are +0.06 in., −0.000 in.
(2) There are no Class 400 flanges NPS ½ through NPS 3 (use Class 600).
(3) There are no Class 900 flanges NPS ½ through NPS 2½ (use Class 1500).
(4) There are no Class 2500 flanges NPS 14 and larger.

Copyright ASME International
Provided by IHS under license with ASME
No reproduction or networking permitted without license from IHS
Not for Resale

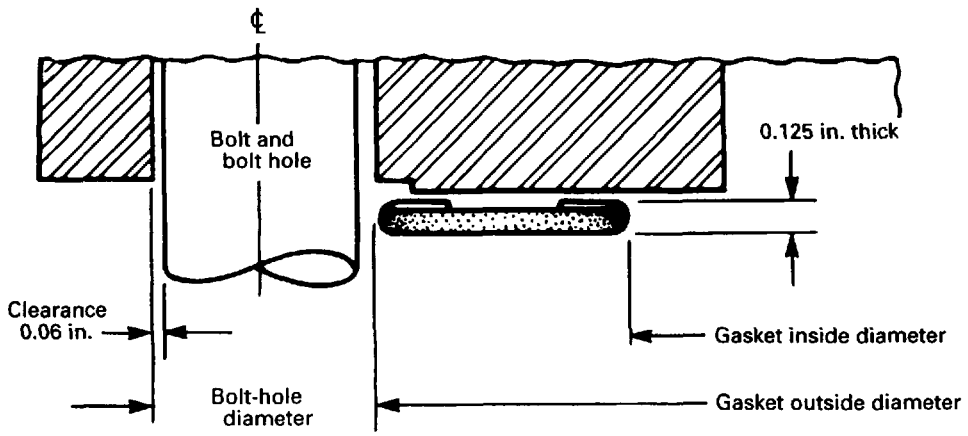

TABLE 22 JACKETED GASKET DIMENSIONS FOR ASME B16.47 SERIES A FLANGES

Flange Size (NPS)	Gasket Inside Diameter (1)	Gasket Outside Diameter by Class (1)				
		150	300	400	600	900 (2)
26	26.50	30.38	32.75	32.63	34.00	34.63
28	28.50	32.63	35.25	35.00	35.88	37.13
30	30.50	34.63	37.38	37.13	38.13	39.63
32	32.50	36.88	39.50	39.38	40.13	42.13
34	34.50	38.88	41.50	41.38	42.13	44.63
36	36.50	41.13	43.88	43.88	44.38	47.13
38	38.50	43.63	41.38	42.13	43.38	47.13
40	40.50	45.63	43.75	44.25	45.38	49.13
42	42.50	47.88	45.75	46.25	47.88	51.13
44	44.50	50.13	47.88	48.38	49.88	53.75
46	46.50	52.13	50.00	50.63	52.13	56.38
48	48.50	54.38	52.00	52.88	54.63	58.38
50	50.50	56.38	54.13	55.13	56.88	...
52	52.50	58.63	56.13	57.13	58.88	...
54	54.50	60.88	58.63	59.63	61.13	...
56	56.50	63.13	60.63	61.63	63.13	...
58	58.50	65.38	62.63	63.63	65.38	...
60	60.50	67.38	64.63	66.13	68.13	...

GENERAL NOTE: The gasket-thickness tolerance is +0.03 in., −0.000 in.

NOTES:

(1) For gaskets NPS 26 through NPS 60, the outside diameter and inside diameter tolerances are +0.13 in., −0.000 in.

(2) There are no Class 900 flanges NPS 50 and larger.

Copyright ASME International
Provided by IHS under license with ASME
No reproduction or networking permitted without license from IHS
Not for Resale

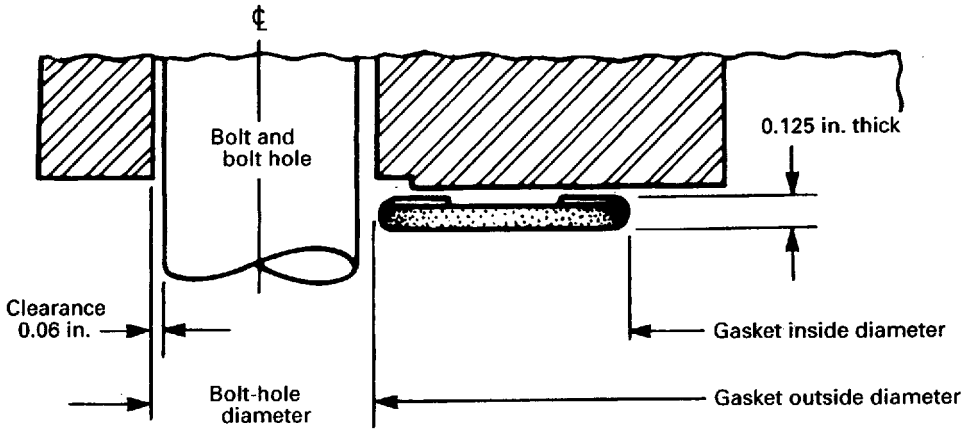

TABLE 23 JACKETED GASKET DIMENSIONS FOR ASME B16.47 SERIES B FLANGES

Flange Size (NPS)	Gasket Inside Diameter (1)	Gasket Outside Diameter by Class (1)				
		150	300	400	600	900 (2)
26	26.50	28.44	30.25	29.25	30.00	32.88
28	28.50	30.44	32.38	31.38	32.13	35.38
30	30.50	32.44	34.75	33.63	34.50	37.63
32	32.50	34.56	36.88	35.75	36.63	39.88
34	34.50	36.69	39.00	37.75	39.13	42.13
36	36.50	38.75	41.13	40.13	41.13	44.13
38	38.50	41.00	43.13	42.13	43.38	47.13
40	40.50	43.00	45.13	44.25	45.38	49.13
42	42.50	45.00	47.13	46.25	47.88	51.13
44	44.50	47.00	49.13	48.38	49.88	53.75
46	46.50	49.31	51.75	50.63	52.13	56.38
48	48.50	51.31	53.75	52.88	54.63	58.38
50	50.50	53.31	55.75	55.13	56.88	...
52	52.50	55.31	57.75	57.13	58.88	...
54	54.50	57.50	60.13	59.63	61.13	...
56	56.50	59.50	62.63	61.63	63.13	...
58	58.50	62.06	65.06	63.63	65.38	...
60	60.50	64.06	67.06	66.13	68.13	...

GENERAL NOTE: The gasket-thickness tolerance is +0.03 in., −0.000 in.

NOTES:

(1) For gaskets NPS 26 through NPS 60, the outside diameter and inside diameter tolerances are +0.13 in., −0.000 in.

(2) There are no Class 900 flanges NPS 50 and larger.

Copyright ASME International
Provided by IHS under license with ASME
No reproduction or networking permitted without license from IHS
Not for Resale

TABLE 24 ABBREVIATIONS FOR IDENTIFYING MATERIALS FOR JACKETED GASKETS

Material		Abbreviation
	Metals	
Al	Aluminum	AL
CRS	Carbon steel	CS
Cu	Copper	CU
Ni–Mo (grade B2)	Hastelloy B	HAST B
Ni–Mo–Cr (grade C-276)	Hastelloy C	HAST C
Ni–Cr–Fe (grade 600)	Inconel 600	INC 600
Ni–Cr–Fe–Cb (grade 625)	Inconel 625	INC 625
Ni–Fe–Cr (grade 800)	Incoloy 800	IN 800
Ni–Cr–Fe–Ti (grade X-750)	Inconel X-750	INX
Ni–Cu (grade 400)	Monel	MON
Nickel 200	Nickel	NI
Soft iron	Soft iron	Soft iron
Ni–Cr	Stainless steels	3-digit
Ta	Tantalum	TANT
Ti	Titanium	TI
	Fillers	
	Asbestos	ASB
	Ceramic	CER
	Flexible graphite	F.G.
	Polytetrafluoroethylene	PTFE

TABLE 25 EXAMPLE MARKINGS FOR JACKETED GASKETS

Description	Marking
NPS 2½, Class 150 ASME B16.5 gasket having a Type 304 metal jacket and a flexible graphite filler material	2½–150—304/F.G. (Manufacturer's trademark) ASME B16.20
NPS 30, Class 300 ASME B16.47 Series B gasket having a carbon-steel jacket and a ceramic filler material	30–300—CS/CER ASME B16.47 B (Manufacturer's trademark) ASME B16.20

Copyright ASME International
Provided by IHS under license with ASME
No reproduction or networking permitted without license from IHS
Not for Resale

MANDATORY ANNEX I
REFERENCES

(a)

The following is a list of publications referenced in this Standard.

API Specification 6A — 17th Edition — 1996, Specification for Valves and Wellhead Equipment

Publisher: American Petroleum Institute (API), 1220 L Street, NW, Washington, DC 20005

ASME B16.5-1996, Pipe Flanges and Flanged Fittings[1]

ASME B16.47-1996, Large Diameter Steel Flanges: NPS 26 through NPS 60[1]

ASME B36.10M-1996, Welded and Seamless Wrought Steel Pipe[1]

ASME B36.19M-1985 (R1994), Stainless Steel Pipe[1]

Publisher: American Society of Mechanical Engineers (ASME), Three Park Ave., New York, NY 10016; Order Department: 22 Law Drive, Box 2300, Fairfield, NJ 07007

[1] May also be obtained from the American National Standards Institute (ANSI), 11 West 42nd Street, New York, NY 10036.

ISO 9000-1: 1994, Quality management and quality assurance standards — Part 1: Guidelines for selection and use

ISO 9000-2: 1997, Quality management and quality assurance standards — Part 2: Generic guidelines for the application of ISO 9001, ISO 9002, and ISO 9003

ISO 9000-3: 1997, Quality management and quality assurance standards — Part 3: Guidelines for the application of ISO 9001 to the development, supply, installation, and maintenance of computer software

ISO 9001: 1994, Quality systems — Model for quality assurance in design, development, production, installation, and servicing

ISO 9002: 1994, Quality systems — Model for quality assurance in production, installation, and servicing

ISO 9003: 1994, Quality systems — Model for quality assurance in final inspection and test

Publisher: International Organization for Standardization (ISO), 1 rue de Varembé, Case postale 56, CH-1211 Genève 20, Switzerland/Suisse

Copyright ASME International
Provided by IHS under license with ASME
No reproduction or networking permitted without license from IHS
Not for Resale

NONMANDATORY ANNEX A
QUALITY SYSTEM PROGRAM

The products manufactured in accordance with this Standard shall be produced under a quality system program following the principles of an appropriate standard from the ISO 9000 series.[1] A determination of the need for registration and/or certification of the product manufacturer's quality system program by an independent organization shall be the responsibility of the manufacturer. Detailed documentation demonstrating program compliance shall be available to the purchaser at the manufacturer's facility. A written, summarized description of the program used by the product manufacturer shall be available to the purchaser upon request. The product manufacturer is defined as the entity whose name or trademark appears on the product in accordance with the marking or identification requirements of this Standard.

---

[1] The series is also available from the American National Standards Institute (ANSI) and the American Society for Quality (ASQ) as American National Standards that are identified by a prefix "Q" replacing the prefix "ISO". Each standard of the series is listed in Annex I.

Previous page is blank

Copyright ASME International
Provided by IHS under license with ASME
No reproduction or networking permitted without license from IHS
Not for Resale

AMERICAN NATIONAL STANDARDS FOR PIPING, PIPE FLANGES, FITTINGS, AND VALVES

Scheme for the Identification of Piping Systems A13.1-1996
Pipe Threads, General Purpose (Inch) ..... B1.20.1-1983(R1992)
Dryseal Pipe Threads (Inch) ..... B1.20.3-1976(R1998)
Cast Iron Pipe Flanges and Flanged Fittings: Classes 25, 125, and 250 ..... B16.1-1998
Malleable Iron Threaded Fittings: Classes 150 and 300 ..... B16.3-1998
Gray Iron Threaded Fittings: Classes 125 and 250 ..... B16.4-1998
Pipe Flanges and Flanged Fittings (NPS ½ Through NPS 24) B16.5-1996
Factory-Made Wrought Steel Buttwelding Fittings B16.9-1993
Face-to-Face and End-to-End Dimensions of Valves B16.10-1992
Forged Fittings, Socket-Welding and Threaded B16.11-1996
Cast Iron Threaded Drainage Fittings B16.12-1998
Ferrous Pipe Plugs, Bushings, and Locknuts with Pipe Threads B16.14-1991
Cast Bronze Threaded Fittings: Classes 125 and 250 ..... B16.15-1985(R1994)
Cast Copper Alloy Solder Joint Pressure Fittings ..... B16.18-1984(R1994)
Metallic Gaskets for Pipe Flanges: Ring-Joint, Spiral-Wound, and Jacketed B16.20-1998
Nonmetallic Flat Gaskets for Pipe Flanges B16.21-1992
Wrought Copper and Copper Alloy Solder Joint Pressure Fittings B16.22-1995
Cast Copper Alloy Solder Joint Drainage Fittings — DWV B16.23-1992
Cast Copper Alloy Pipe Flanges and Flanged Fittings: Classes 150, 300, 400, 600, 900, 1500, and 2500 ..... B16.24-1991(R1998)
Buttwelding Ends B16.25-1997
Cast Copper Alloy Fittings for Flared Copper Tubes B16.26-1988
Wrought Steel Buttwelding Short Radius Elbows and Returns B16.28-1994
Wrought Copper and Wrought Copper Alloy Solder Joint Drainage Fittings — DWV B16.29-1994
Manually Operated Metallic Gas Valves for Use in Gas Piping Systems up to 125 psig (Sizes ½ Through 2) B16.33-1990
Valves — Flanged, Threaded, and Welding End B16.34-1996
Orifice Flanges B16.36-1996
Large Metallic Valves for Gas Distribution (Manually Operated, NPS 2½ to 12, 125 psig Maximum) ..... B16.38-1985(R1994)
Malleable Iron Threaded Pipe Unions B16.39-1998
Manually Operated Thermoplastic Gas Shutoffs and Valves in Gas Distribution Systems ..... B16.40-1985(R1994)
Ductile Iron Pipe Flanges and Flanged Fittings, Classes 150 and 300 ..... B16.42-1998
Manually Operated Metallic Gas Valves for Use in House Piping Systems B16.44-1995
Cast Iron Fittings for Sovent® Drainage Systems B16.45-1998
Large Diameter Steel Flanges (NPS 26 Through NPS 60) B16.47-1996
Steel Line Blanks B16.48-1997
Factory-Made Wrought Steel Buttwelding Induction Bends for Transportation and Distribution Systems B16.49-2000
Power Piping B31.1-1998
Fuel Gas Piping (not an ANSI standard) B31.2-1968
Process Piping B31.3-1999
Pipeline Transportation Systems for Liquid Hydrocarbons and Other Liquids B31.4-1998
Refrigeration Piping B31.5-1992
Gas Transmission and Distribution Piping Systems B31.8-1999
Building Services Piping B31.9-1996
Slurry Transportation Piping Systems B31.11-1989
Manual for Determining the Remaining Strength of Corroded Pipelines B31G-1991
Welded and Seamless Wrought Steel Pipe B36.10M-1996
Stainless Steel Pipe ..... B36.19M-1985(R1994)
Self-Operated and Power-Operated Safety-Related Valves Functional Specification Standard ..... N278.1-1975(R1992)

The ASME Publications Catalog shows a complete list of all the Standards published by the Society. For a complimentary catalog, or the latest information about our publications, call 1-800-THE-ASME (1-800-843-2763).

Copyright ASME International
Provided by IHS under license with ASME
No reproduction or networking permitted without license from IHS
Not for Resale

ASME Services

ASME is committed to developing and delivering technical information. At ASME's Information Central, we make every effort to answer your questions and expedite your orders. Our representatives are ready to assist you in the following areas:

ASME Press
Codes & Standards
Credit Card Orders
IMechE Publications
Meetings & Conferences
Member Dues Status
Member Services & Benefits
Other ASME Programs
Payment Inquiries
Professional Development
Short Courses
Publications
Public Information
Self-Study Courses
Shipping Information
Subscriptions/Journals/Magazines
Symposia Volumes
Technical Papers

How can you reach us? It's easier than ever!

There are four options for making inquiries* or placing orders. Simply mail, phone, fax, or E-mail us and an Information Central representative will handle your request.

Mail	*Call Toll Free*	*Fax-24 hours*	*E-Mail-24 hours*
ASME	**US & Canada:** 800-THE-ASME	973-882-1717	Infocentral
22 Law Drive, Box 2900	(800-843-2763)	973-882-5155	@asme.org
Fairfield, New Jersey	**Mexico:** 95-800-THE-ASME		
07007-2900	(95-800-843-2763)		
	Universal: 973-882-1167		

* Information Central staff are not permitted to answer inquiries about the technical content of this code or standard. Information as to whether or not technical inquiries are issued to this code or standard is shown on the copyright page. All technical inquiries must be submitted in writing to the staff secretary. Additional procedures for inquiries may be listed within.

Copyright ASME International
Provided by IHS under license with ASME
No reproduction or networking permitted without license from IHS
Not for Resale

ISBN 0-7918-2635-X





L03098

Copyright ASME International
Provided by IHS under license with ASME
No reproduction or networking permitted without license from IHS

Not for Resale