ASME B16.14 91 ■ 0759670 0081831 4 ■

ASME B16.14-1991
(REVISION OF ANSI B16.14-1983)

Ferrous Pipe Plugs, Bushings, and Locknuts with Pipe Threads

AN AMERICAN NATIONAL STANDARD

The American Society of Mechanical Engineers

Copyright ASME International
Provided by IHS under license with ASME
No reproduction or networking permitted without license from IHS

Not for Resale

AN AMERICAN NATIONAL STANDARD

Ferrous Pipe Plugs, Bushings, and Locknuts with Pipe Threads

ASME B16.14-1991

(REVISION OF ANSI B16.14-1983)

The American Society of Mechanical Engineers

345 East 47th Street, New York, N.Y. 10017

Copyright ASME International
Provided by IHS under license with ASME
No reproduction or networking permitted without license from IHS

Not for Resale

Date of Issuance: February 15, 1991

The 1991 edition of this Standard is being issued with an automatic addenda subscription service. The use of an addenda allows revisions made in response to public review comments or committee actions to be published as necessary; revisions published in addenda will become effective 6 months after the Date of Issuance of the addenda. The next edition of this Standard is scheduled for publication in 1996.

ASME issues written replies to inquiries concerning interpretations of technical aspects of this Standard. The interpretations will be included with the above addenda service. Interpretations are not part of the addenda to the standard.

ASME is the registered trademark of The American Society of Mechanical Engineers.

This code or standard was developed under procedures accredited as meeting the criteria for American National Standards. The Consensus Committee that approved the code or standard was balanced to assure that individuals from competent and concerned interests have had an opportunity to participate. The proposed code or standard was made available for public review and comment which provides an opportunity for additional public input from industry, academia, regulatory agencies, and the public-at-large.

ASME does not "approve," "rate," or "endorse" any item, construction, proprietary device, or activity.

ASME does not take any position with respect to the validity of any patent rights asserted in connection with any items mentioned in this document, and does not undertake to insure anyone utilizing a standard against liability for infringement of any applicable Letters Patent, nor assume any such liability. Users of a code or standard are expressly advised that determination of the validity of any such patent rights, and the risk of infringement of such rights, is entirely their own responsibility.

Participation by federal agency representative(s) or person(s) affiliated with industry is not to be interpreted as government or industry endorsement of this code or standard.

ASME accepts responsibility for only those interpretations issued in accordance with governing ASME procedures and policies which preclude the issuance of interpretations by individual volunteers.

No part of this document may be reproduced in any form,
in an electronic retrieval system or otherwise,
without the prior written permission of the publisher.

Copyright © 1991 by
THE AMERICAN SOCIETY OF MECHANICAL ENGINEERS
All Rights Reserved
Printed in U.S.A.

Copyright ASME International
Provided by IHS under license with ASME
No reproduction or networking permitted without license from IHS

Not for Resale

FOREWORD

(This Foreword is not part of ASME B16.14-1991.)

In 1921, the American Engineering Standards Committee [later the American Standards Association (ASA)] organized Sectional Committee B16 to unify and develop standards for pipe flanges and fittings. Cosponsors of the B16 Committee were the American Society of Mechanical Engineers (ASME), the Heating and Piping Contractors National Association [now Mechanical Contractors Association of America (MCAA)], and the Manufacturers Standardization Society of the Valve and Fitting Industry (MSS). Cosponsors were later designated as Co-Secretariat organizations.

Threaded fittings were also included in the scope of the B16 Committee and Subcommittee 2 (now Subcommittee B) was made responsible for threaded fittings other than steel.

The American Standard for Pipe Plugs was originally published as ASA B16e2-1936. It had been developed by Subcommittee 2 from material assembled and published by MSS as a standard practice in April, 1929.

From the beginning, pipe plugs have been made with the American Standard Taper Pipe Thread but the design of the square heads necessary to screw them into fittings or any taped hole has been a matter of manufacturers' and users' individual design. However, the use of pipe plugs soon broadened and they came to be employed in many other service applications, e.g., automotive and industrial machinery. Accordingly, it was natural for the dimensions of the square heads and the sockets to conform to standard open wrench sizes and to maximum dimensions of standard hot rolled steel bars.

Pipe bushing and locknut dimensions were originally included in ASA B16c-1939, American Standard for 150 lb Malleable Iron Screwed Fittings. B16c-1939 was adapted from information assembled and published by MSS in 1929.

In response to a demand for inclusion under one cover, B16.14-1943, American Standard for Ferrous Plugs, Bushings, Locknuts, and Caps, was developed from ASA B16c-1939 and ASA B16d-1941, the American Standard for Cast Iron Screwed Fittings, 125 lb and 250 lb, and approved by ASA in October 1943. The section of B16.14 covering pipe caps was later removed because of differences in pressure ratings between caps made of cast iron and malleable iron.

This Standard was revised in 1948 and was approved by letter ballot vote of the Sectional Committee and, following the approval of the sponsor bodies, it was presented to ASA, now the American National Standards Institute, Inc. (ANSI), with recommendations for approval as an American Standard. This approval and designation was given on April 6, 1949.

Subcommittee 2 began a review of the document in 1963 and completed its work in 1964. The Sectional Committee approved a number of minor changes in format and wording. Following approval by the sponsor organizations, ANSI approval was granted on November 12, 1965.

In 1970, a review was initiated by Subcommittee 2, which resulted in the proposal to revise the document in several minor areas as well as up-dating referenced standards. Following approvals by the Standards Committee and Co-Secretariat, ANSI granted

Copyright ASME International
Provided by IHS under license with ASME
No reproduction or networking permitted without license from IHS
Not for Resale

approval on November 1, 1971.

In 1975, review was again initiated by Subcommittee B (formerly 2) and it was determined that the only significant changes needed were up-dating of referenced standards and the addition of metric equivalents. Approvals were granted by the Standards Committee, Co-Secretariat and ANSI, the latter on February 4, 1977.

In 1982, the American National Standards Committee was reorganized as an ASME Committee operating under procedures accredited by ANSI. That same year, Subcommittee B once again began review of the Standard. The only changes made were the dates of the referenced standards. After approval by the Standards Committee and the ASME, final approval was granted by ANSI in July 1983.

This revision of B16.14 establishes U.S. customary units as the Standard, updates the referenced standards, and specifies minimum specifications for steel fittings. Following approval by the Standards Committee and ASME, approval as an American National Standard was given by ANSI on January 4, 1991, with the new designation ASME B16.14-1991.

This Standard is issued on a subscription service addenda basis. The use of an addenda system allows revisions made in response to public review comments or committee actions to be published on a regular biannual basis. Revisions published by addenda become effective one year after the Date of Issuance.

ASME issues written replies to inquiries concerning interpretation of technical aspects of this Standard. With the 1983 Edition, interpretations will be included with the addenda service. Interpretations are not part of the addenda to the Standard. All requests for interpretations or suggestions for revisions should be sent to: Secretary, B16, The American Society of Mechanical Engineers, 345 East 47th Street, New York, NY 10017.

Copyright ASME International
Provided by IHS under license with ASME
No reproduction or networking permitted without license from IHS
Not for Resale

ASME B16 COMMITTEE
Standardization of Valves, Flanges, Fittings, Gaskets and Valve Actuators

(The following is the roster of the Committee at the time of approval of this Standard.)

OFFICERS

W. N. McLean, *Chairman*
R. A. Schmidt, *Vice Chairman*
P. D. Stumpf, *Secretary*

COMMITTEE PERSONNEL

W. L. Ballis, Columbia Gas Distribution Co., Columbus, Ohio
J. E. Batey, Union Carbide Corp., South Charleston, West Virginia
K. M. Bell, Underwriters Laboratories Inc., Northbrook, Illinois
R. R. Brodin, Fisher Controls International Inc., Marshalltown, Iowa
W. G. Canham, Jr., Brentwood, Missouri
A. Cohen, Copper Development Association, Greenwich, Connecticut
W. C. Farrell, Jr., Stockham Valves and Fittings Inc., Birmingham, Alabama
D. R. Frikken, Monsanto Co., St. Louis, Missouri
M. W. Garland, Frick Co., Waynesboro, Pennsylvania
J. C. Inch, Mueller Brass Co., Hartsville, Tennessee
J. S. John, Houston, Texas
W. G. Knecht, Anchor/Darling Valve Co., Williamsport, Pennsylvania
R. Koester, The William Powell Co., Cincinnati, Ohio
J. H. Longacre, Nibco Inc., Elkhart, Indiana
J. H. McCauley, Jr., McCauley Mechanical, Chicago, Illinois
W. N. McLean, *Chairman,* Newco Valves, Palos Park, Illinois
M. E. O'Hagan, Valve Manufacturers Association, Washington, D.C.
A. F. Rhodes, Gripper Inc., Houston, Texas
R. A. Schmidt, *Vice Chairman,* Ladish Co., Russellville, Arkansas
T. F. Stroud, Ductile Iron Pipe Research Association, Birmingham, Alabama
P. D. Stumpf, *Secretary,* ASME, New York, New York
R. E. White, Repairs Inc., South Bend, Indiana
D. A. Williams, Southern Company Services, Birmingham, Alabama
D. Wilson, Mobile Pipeline Co., Dallas, Texas

PERSONNEL OF SUBCOMMITTEE B — THREADED FITTINGS (EXCEPT STEEL)

W. C. Farrell, Jr., *Chairman,* Stockham Valves and Fittings Inc., Birmingham, Alabama
J. P. Millman, *Secretary,* ASME, New York, New York
A. Cohen, Copper Development Association, Greenwich, Connecticut
M. D. Goodson, U-Brand Corp., Ashland, Ohio
J. H. Longacre, Nibco Inc., Elkhart, Indiana
G. J. Lyman, Ward Manufacturing, Inc., Blossburg, Pennsylvania

Copyright ASME International
Provided by IHS under license with ASME
No reproduction or networking permitted without license from IHS
Not for Resale

CONTENTS

Foreword iii
Standards Committee Roster v

1 Scope 1
2 Pressure-Temperature Ratings 1
3 Size 1
4 Marking 1
5 Materials 1
6 Dimensions and Tolerances 1
7 Threading 1
8 Pattern Taper 2

Tables

1 Dimensions of Square Head Plugs 3
2 Dimensions of Bar or Slotted Head Plugs 4
3 Dimensions of Countersunk Plugs 4
4 Dimensions of Outside Head, Inside Head, and Face Bushings 5
5 Dimensions of Locknuts 7

Annex

A References 9

Copyright ASME International
Provided by IHS under license with ASME
No reproduction or networking permitted without license from IHS
Not for Resale

FERROUS PIPE PLUGS, BUSHINGS, AND LOCKNUTS WITH PIPE THREADS

1 SCOPE

This Standard for Ferrous Pipe Plugs, Bushings, and Locknuts with Pipe Threads covers:

(*a*) pressure-temperature ratings;
(*b*) size[1];
(*c*) marking;
(*d*) materials;
(*e*) dimensions[1] and tolerances;
(*f*) threading; and
(*g*) pattern taper.

2 PRESSURE-TEMPERATURE RATINGS

(*a*) Pressure-temperature ratings for plugs and bushings shall be in accordance with ANSI/ASME B16.4 if made of cast iron, or ANSI/ASME B16.3 if made of malleable iron, ductile iron or steel. Use of cored plugs and hexagon head bushings should be limited to Class 125 cast iron and Class 150 malleable iron threaded fittings. Solid plugs and face bushings are recommended for use with Class 250 cast iron fittings and Class 300 malleable iron fittings.

(*b*) Locknuts are not pressure-temperature rated.

3 SIZE

The size of the fittings scheduled in the following tables is identified by the corresponding nominal pipe size.

4 MARKING

Each fitting shall be marked for identification with the manufacturers' name or trademark, except where a marking is impractical.

[1] The use of the word nominal as a modifier of a dimension or size is intended to indicate that the stated dimension or size is used for purposes of designation.

5 MATERIALS

(*a*) These fittings are furnished in cast iron, malleable iron, ductile iron, or steel as indicated in the individual tables.

(*b*) The chemical and mechanical properties of cast material shall equal or exceed those properties listed in ASTM A126, Specification for Gray Iron Castings for Valves, Flanges, and Pipe Fittings, ASTM A197, Specification for Cupola Malleable Iron, and ASTM A395, Specification for Ferritic Ductile Iron Pressure Retaining Castings for Use at Elevated Temperatures, as applicable. Steel castings, forgings, or machined bar properties shall correspond to the comparable ASTM casting material specifications. The fittings manufacturer shall be prepared to certify conformance based on test data.

6 DIMENSIONS AND TOLERANCES

(*a*) Dimensions in U.S. Customary Units are used in this standard.

(*b*) At no point in the component wall shall the metal thickness be less than 90% of the values listed in the tables.

7 THREADS

7.1 Thread Form

Threads shall be in accordance with ANSI/ASME B1.20.1. All internal taper pipe threads shall be countersunk a distance not less than one half the pitch of the thread at an angle of approximately 45 deg. with the axis of the thread. External taper pipe threads shall be chamfered at an angle between 30 and 45 deg. with the axis. Countersinking and chamfering shall be concentric with the threads.

(*a*) The length of threads specified in all tables shall be measured to include the countersink or chamfer.

(*b*) The maximum allowable variation in the alignment of threads of all openings shall be 0.06 in./ft.

Copyright ASME International
Provided by IHS under license with ASME
No reproduction or networking permitted without license from IHS
Not for Resale

7.2 Plugs

Plugs shall be threaded with ANSI/ASME B1.20.1 taper pipe threads. The variation in threading shall be limited to one turn large or one turn small from the gaging notch on plug or gaging face of ring when using working gages.

7.3 Bushings

Bushings shall be threaded with American National Standard taper pipe threads. Gaging of all threads shall comply with ANSI/ASME B1.20.1, except those sizes of outside hexagon bushings where the external thread lengths are shorter than required by ANSI/ASME B1.20.1. These bushings should be threaded so that when making up the joint, the shoulder of the head will not interfere. To insure this, the threads, when made to the minimum length, shall be gaged as listed below with a tolerance of one turn large or small.

NPS ¼ to 1½, incl.	1 turn large
NPS 2	1½ turns large
NPS 2½ to 8, incl.	2 turns large

(*a*) An outside head bushing is one having any part of the polygon protruding beyond the outside diameter of the large end of the external thread.

(*b*) An inside head bushing is one having all parts of the polygon head contained within the root diameter of the large end of the external thread.

(*c*) A face bushing is one having two lugs on the face of the large end of the external thread by which a bar can be used for make-up with internal pipe threads. Lugs are optional on face bushings in small pipe sizes when made of bar stock.

7.4 Locknuts

Locknuts shall be tapped with straight pipe threads in accordance with ANSI/ASME B1.20.1.

8 PATTERN TAPER

Plug squares or hexagons, raised or countersunk, may have opposite sides tapered a maximum of 4 deg. total.

Copyright ASME International
Provided by IHS under license with ASME
No reproduction or networking permitted without license from IHS

Not for Resale

PLUGS

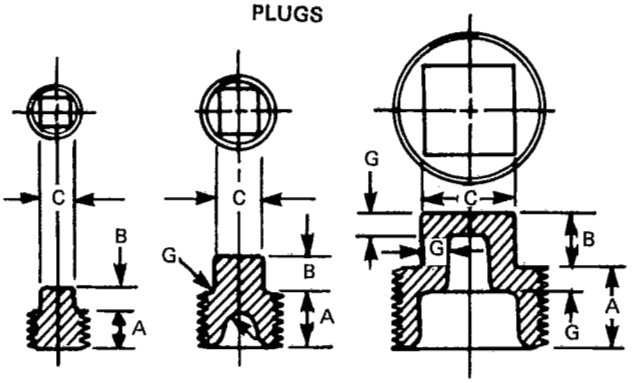

Solid Plugs Cored Plugs

TABLE 1 DIMENSIONS OF SQUARE HEAD PLUGS

Nominal Pipe Size [Notes (1), (2)]	Thread Length, Min. A	Height of Square, Min. B	Nominal Width Across Flats [Note (3)] C	Nominal Metal Thickness [Note (4)] G
1/8	0.37	0.24	9/32	. . .
1/4	0.44	0.28	3/8	. . .
3/8	0.48	0.31	7/16	. . .
1/2	0.56	0.38	9/16	0.16
3/4	0.63	0.44	5/8	0.18
1	0.75	0.50	13/16	0.20
1 1/4	0.80	0.56	15/16	0.22
1 1/2	0.83	0.62	1 1/8	0.24
2	0.88	0.68	1 5/16	0.26
2 1/2	1.07	0.74	1 1/2	0.29
3	1.13	0.80	1 11/16	0.31
3 1/2	1.18	0.86	1 7/8	0.34

GENERAL NOTE: Dimensions are in inches.

NOTES:
(1) Solid plugs are provided in sizes 1/8 to 3 1/2 incl.; cored plugs, sizes 1/2 to 3 1/2, incl.
(2) For sizes 4 and larger slotted or bar pattern plugs are provided. (See Table 2).
(3) These dimensions are the nominal size of wrench as given in Appendix V of American National Standard, Square and Hex Bolts and Screws (ANSI B18.2.1). Square head plugs are designed to fit these wrenches.
(4) Cored plugs have metal thickness at all points, equal to dimension G, except at the end of the thread. For tolerance, see para. 6(b).

Copyright ASME International
Provided by IHS under license with ASME
No reproduction or networking permitted without license from IHS
Not for Resale

PLUGS

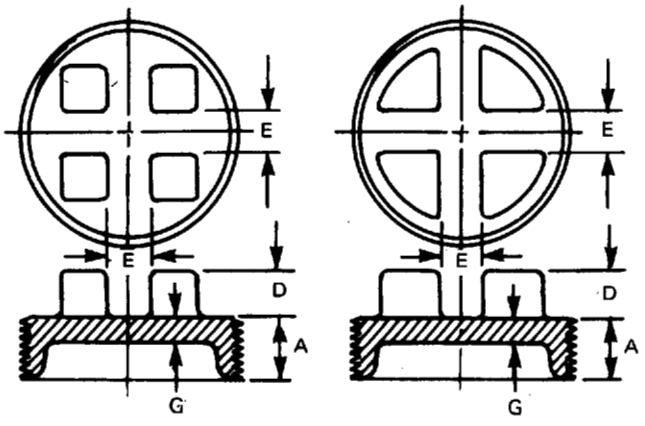

Optional Designs

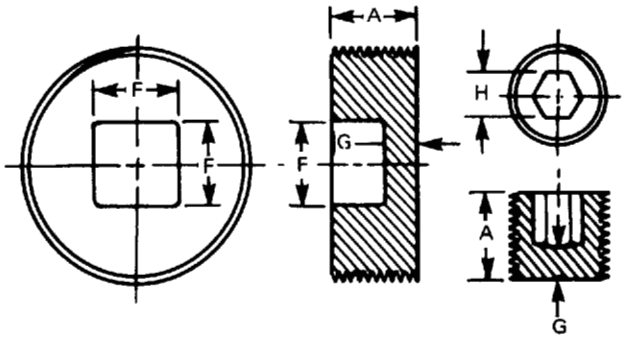

TABLE 2 DIMENSIONS OF BAR OR SLOTTED HEAD PLUGS

Nominal Pipe Size	Thread Length, Min. A	Height of Lug, Min. D	Distance Between Lugs, Min. E	Metal Thickness [Note (1)] G
4	1.22	1.00	0.88	0.37
5	1.31	1.00	0.88	0.46
6	1.40	1.25	1.25	0.52
8	1.57	1.38	1.50	0.66

GENERAL NOTES:
(a) Dimensions are in inches.
(b) For sizes 3½ and smaller, square head plugs are provided. (See Table 1).

NOTE:
(1) Cored plugs have metal thickness at all points, equal to dimension G, except at the end of the thread. For tolerance, see para. 6(b).

TABLE 3 DIMENSIONS OF COUNTERSUNK PLUGS

Nominal Pipe Size	Thread Length, Min. A	Nominal Size of Square Socket [Note (1)] F	Size of Hexagon [Note (2)] H	Metal Thickness [Note (3)] G
1/8	0.37	. . .	3/16	0.06
1/4	0.44	. . .	1/4	0.09
3/8	0.48	. . .	5/16	0.13
1/2	0.56	3/8	3/8	0.16
3/4	0.63	1/2	9/16	0.18
1	0.75	1/2	5/8	0.20
1 1/4	0.80	3/4	. . .	0.22
1 1/2	0.83	3/4	. . .	0.24
2	0.88	7/8	. . .	0.26
2 1/2	1.07	1 1/8	. . .	0.29
3	1.13	1 3/8	. . .	0.31
3 1/2	1.18	1 1/2	. . .	0.34
4	1.22	2	. . .	0.37

GENERAL NOTE: Dimensions are in inches.

NOTES:
(1) Square socket of countersunk pattern to have dimensions to fit commercial square bars of sizes indicated.
(2) Hexagon socket or countersunk pattern shall have dimensions to fit regular wrenches used with hexagon socket set screws.
(3) For metal thickness tolerance, see para. 6(b).

Copyright ASME International
Provided by IHS under license with ASME
No reproduction or networking permitted without license from IHS

Not for Resale

BUSHINGS

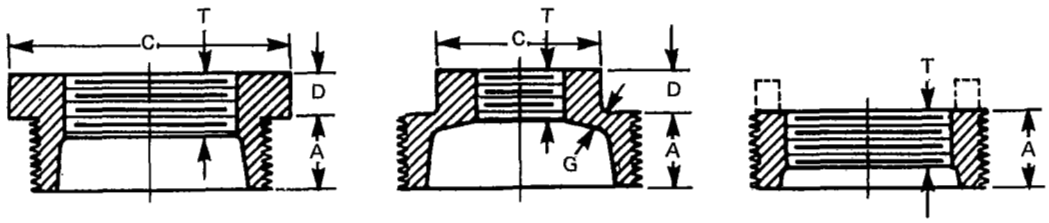

Outside Head | Inside Head | Face

TABLE 4 DIMENSIONS OF OUTSIDE HEAD, INSIDE HEAD, AND FACE BUSHINGS

Nominal Pipe Size [Note (1)]	Length of External Thread, Min. [Note (2)] A	Length of Internal Thread, Min. T	Height of Head, Min. D	Width of Head, Min. [Note (3)] C		Nominal Metal Thickness [Note (4)] G
				Outside	Inside	
¼ × ⅛	0.44	0.26[5]	0.14	0.64[6]	...	...
⅜ × ¼	0.48	0.40[5]	0.16	0.68[6]	...	...
⅜ × ⅛	0.48	0.25	0.16	0.68[6]	...	...
½ × ⅜	0.56	0.41[5]	0.19	0.87[6]	...	...
½ × ¼	0.56	0.32	0.19	0.87[6]	...	...
½ × ⅛	0.56	0.25	0.19	0.87[6]	...	...
¾ × ½	0.63	0.53[5]	0.22	1.15[6]	...	...
¾ × ⅜	0.63	0.36	0.22	1.15[6]	...	...
¾ × ¼	0.63	0.32	0.22	1.15[6]	...	...
¾ × ⅛	0.63	0.25	0.22	1.15[6]	...	...
1 × ¾	0.75	0.50	0.25	1.42[6]	...	...
1 × ½	0.75	0.43	0.25	1.42[6]	...	...
1 × ⅜	0.75	0.36	0.30	...	1.12	...
1 × ¼	0.75	0.32	0.30	...	1.12	...
1 × ⅛	0.75	0.25	0.30	...	1.12	...
1 ¼ × 1	0.80	0.58	0.28	1.76	...	...
1 ¼ × ¾	0.80	0.50	0.28	1.76	...	...
1 ¼ × ½	0.80	0.43	0.34	...	1.34	0.18
1 ¼ × ⅜	0.80	0.36	0.34	...	1.12	0.18
1 ¼ × ¼	0.80	0.32	0.34	...	1.12	0.18
1 ½ × 1 ¼	0.83	0.77[5]	0.31	2.00	...	...
1 ½ × 1	0.83	0.58	0.31	2.00	...	...
1 ½ × ¾	0.83	0.50	0.37	...	1.63	0.20
1 ½ × ½	0.83	0.43	0.37	...	1.34	0.20
1 ½ × ⅜	0.83	0.36	0.37	...	1.12	0.20
1 ½ × ¼	0.83	0.32	0.37	...	1.12	0.20
2 × 1 ½	0.88	0.70	0.34	2.48	...	...
2 × 1 ¼	0.88	0.67	0.34	2.48	...	...
2 × 1	0.88	0.58	0.41	...	1.95	0.22
2 × ¾	0.88	0.50	0.41	...	1.63	0.22
2 × ½	0.88	0.43	0.41	...	1.34	0.22
2 × ⅜	0.88	0.36	0.41	...	1.12	0.22
2 × ¼	0.88	0.32	0.41	...	1.12	0.22
2 ½ × 2	1.07	0.75	0.37	2.98	...	...
2 ½ × 1 ½	1.07	0.70	0.44	2.68	...	...
2 ½ × 1 ¼	1.07	0.67	0.44	...	2.39	0.24
2 ½ × 1	1.07	0.58	0.44	...	1.95	0.24
1 ½ × ¾	1.07	0.50	0.44	...	1.63	0.24
2 ½ × ½	1.07	0.43	0.44	...	1.34	0.24

Notes follow on next page.

Copyright ASME International
Provided by IHS under license with ASME
No reproduction or networking permitted without license from IHS

Not for Resale

TABLE 4 DIMENSIONS OF OUTSIDE HEAD, INSIDE HEAD, AND FACE BUSHINGS (CONT'D)

Nominal Pipe Size [Note (1)]	Length of External Thread, Min. [Note (2)] A	Length of Internal Thread, Min. T	Height of Head, Min. D	Width of Head, Min. [Note (3)] C		Nominal Metal Thickness [Note (4)] G
				Outside	Inside	
3 × 2½	1.13	0.92	0.40	3.86	. . .	. . .
3 × 2	1.13	0.75	0.48	3.28	. . .	. . .
3 × 1½	1.13	0.70	0.48	. . .	2.68	0.26
3 × 1¼	1.13	0.67	0.48	. . .	2.39	0.26
3 × 1	1.13	0.58	0.48	. . .	1.95	0.26
3 × ¾	1.13	0.50	0.48	. . .	1.63	0.26
3 × ½	1.13	0.43	0.48	. . .	1.34	0.26
3½ × 3	1.18	0.98	0.43	4.62	. . .	. . .
3½ × 2½	1.18	0.92	0.52	3.86	. . .	. . .
3½ × 2	1.18	0.75	0.52	. . .	3.28	0.28
3½ × 1½	1.18	0.70	0.52	. . .	2.68	0.28
3½ × 1¼	1.18	0.67	0.52	. . .	2.39	0.28
3½ × 1	1.18	0.58	0.52	. . .	1.95	0.28
4 × 3½	1.22	1.03	0.50	5.20	. . .	. . .
4 × 3	1.22	0.98	0.50	4.62	. . .	. . .
4 × 2½	1.22	0.92	0.60	. . .	3.86	0.31
4 × 2	1.22	0.75	0.60	. . .	3.28	0.31
4 × 1½	1.22	0.70	0.60	. . .	2.68	0.31
4 × 1¼	1.22	0.67	0.60	. . .	2.39	0.31
4 × 1	1.22	0.58	0.60	. . .	1.95	0.31
5 × 4	1.31	1.08	0.50	5.79	. . .	. . .
5 × 3½	1.31	1.03	0.60	5.20	. . .	. . .
5 × 3	1.31	0.98	0.60	. . .	4.62	0.38
5 × 2½	1.31	0.92	0.60	. . .	3.86	0.38
5 × 2	1.31	0.75	0.60	. . .	3.28	0.38
6 × 5	1.40	1.18	0.63	7.05	. . .	. . .
6 × 4	1.40	1.08	0.75	. . .	5.79	0.43
6 × 3½	1.40	1.03	0.75	. . .	5.20	0.43
6 × 3	1.40	0.98	0.75	. . .	4.62	0.43
6 × 2½	1.40	0.92	0.75	. . .	3.86	0.43
6 × 2	1.40	0.75	0.75	. . .	3.28	0.43
8 × 6	1.57	1.28	0.83	8.28	. . .	. . .
8 × 5	1.57	1.18	0.83	. . .	7.05	0.55
8 × 4	1.57	1.08	0.83	. . .	5.79	0.55
8 × 3½	1.57	1.03	0.83	. . .	5.20	0.55
8 × 3	1.57	0.98	0.83	. . .	4.62	0.55

GENERAL NOTES:
(a) Dimensions are in inches.
(b) Cored bushings have minimum metal thickness at all points, equal to dimension G, except at the end of the thread.

NOTES:
(1) Hexagon head or octagon head bushings, size 2½ and smaller reducing one size shall not be made of gray cast iron. Other sizes may be made either of cast iron or malleable iron, ductile iron or steel. Face bushings sizes 2½ and smaller shall not be made of gray cast iron. Face bushings, size 3 and larger reducing one size shall not be made of gray cast iron. Face bushings, size 3 and larger reducing two sizes or more may be made either of cast or malleable iron, ductile iron or steel.
(2) In the case of outside head bushings, Length A includes provisions for imperfect threads. (See also para. 7).
(3) Heads of bushings shall be hexagonal or octagonal, except that on the larger sizes of outside head bushings the heads may be made round with lugs instead of hexagonal or octagonal.
(4) G same as metal thickness for Class 125 Cast Iron Threaded Fittings (ANSI/ASME B16.4). For tolerance, see para. 6(b).
(5) To provide proper metal thickness these sizes shall not be cored out to diameters greater than the root diameter of the internal thread. The length of the internal thread may be equal to the minimum dimension, T, or greater up to the full length of bushing.
(6) When made of bar stock, the dimensions may be ⅝, 11/16, ⅞, 1⅛, and 1 7/16 in., respectively, in order to use regular bar stock sizes.

Copyright ASME International
Provided by IHS under license with ASME
No reproduction or networking permitted without license from IHS

Not for Resale

LOCKNUTS

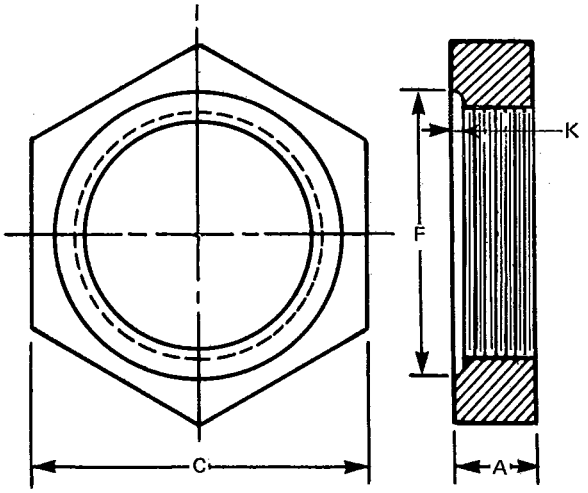

TABLE 5 DIMENSIONS OF LOCKNUTS

Nominal Pipe Size	Nominal Thickness, Min. A	Width Across Flats [Note (1)]		Diameter of Packing Recess, Min. [Note (2)]	Depth of Packing Recess [Note (2)]
		Malleable Iron Ductile Iron Steel Min. C	Cast Iron Min. C	F	K
1/8	0.19	0.69[3]	. . .	0.50	0.04
1/4	0.25	0.84[3]	. . .	0.66	0.06
3/8	0.28	1.00[3]	. . .	0.77	0.06
1/2	0.31	1.18[3]	. . .	0.97	0.06
3/4	0.34	1.43[3]	. . .	1.23	0.06
1	0.38	1.75	. . .	1.50	0.06
1 1/4	0.42	2.10	. . .	1.86	0.06
1 1/2	0.47	2.35	. . .	2.12	0.06
2	0.53	2.88	. . .	2.63	0.09
2 1/2	0.59	3.50	3.86	3.18	0.09
3	0.67	4.27	4.62	3.84	0.09
3 1/2	0.73	4.84	5.20	4.38	0.13
4	0.80	5.38	5.79	5.00	0.13

GENERAL NOTE: Dimensions are in inches.

NOTES:
(1) Sizes 3 1/2 and smaller are hexagonal; the size 4 may be either hexagonal or octagonal.
(2) The packing recess surface may be as-cast. When made from bar stock the recess may be tool finished.
(3) Locknuts in these sizes may be made from bar stock, in which case dimension C may be 11/16, 7/8, 1, 1 3/16, and 1 7/16, in., respectively, in order to conform with regular hexagon bar stock sizes.

Copyright ASME International
Provided by IHS under license with ASME
No reproduction or networking permitted without license from IHS
Not for Resale

ANNEX A
REFERENCES

(This Annex is an integral part of ASME B16.14-1991 and is placed after the main text for convenience.)

The following is a list of standards and specifications referenced in this Standard showing the year of approval.

ASME Publications (Approved as American National Standards)

ANSI/ASME B1.20.1-1983	Pipe Threads, General/Purpose (Inch)
ANSI/ASME B16.3-1985	Malleable Iron Threaded Fittings
ANSI/ASME B16.4-1985	Cast Iron Threaded Fittings
ANSI B18.2.1-1981	Square and Hex Bolts and Screws

ASTM Publications

ASTM A126-84	Specifications for Gray Iron Castings for Valves, Flanges, and Pipe Fittings
ASTM A197-87	Specifications for Cupola Malleable Iron
ASTM A395-88	Specification for Ferritic Ductile Iron Pressure Retaining Castings for Use at Elevated Temperatures

Publications of the following organizations appear on the above list:

ASME	The American Society of Mechanical Engineers 345 East 47th Street, New York, NY 10017
ASTM	American Society for Testing and Materials 1916 Race Street, Philadelphia, PA 19103

Publications appearing above which have been approved as American National Standards may also be obtained from:

ANSI	American National Standards Institute, Inc. 1430 Broadway, New York, NY 10018

Copyright ASME International
Provided by IHS under license with ASME
No reproduction or networking permitted without license from IHS

Not for Resale

AMERICAN NATIONAL STANDARDS FOR PIPING, PIPE FLANGES, FITTINGS, AND VALVES

Scheme for the Identification of Piping Systems ..... A13.1-1981(R1985)
Pipe Threads, General Purpose (Inch) B1.20.1-1983
Dryseal Pipe Threads (Inch) ..... B1.20.3-1976(R1982)
Cast Iron Pipe Flanges and Flanged Fittings B16.1-1989
Malleable Iron Threaded Fittings, Class 150 and 300 ..... B16.3-1985
Cast Iron Threaded Fittings, Classes 125 and 250 ..... B16.4-1985
Pipe Flanges and Flanged Fittings B16.5-1988
Factory-Made Wrought Steel Buttwelding Fittings B16.9-1986
Face-to-Face and End-to-End Dimensions of Valves B16.10-1986
Forged Steel Fittings, Socket-Welding and Threaded B16.11-1980
Cast Iron Threaded Drainage Fittings B16.12-1983
Ferrous Pipe Plugs, Bushings, and Locknuts with Pipe Threads B16.14-1991
Cast Bronze Threaded Fittings, Class 125 and 250 ..... B16.15-1985
Cast Copper Alloy Solder Joint Pressure Fittings B16.18-1984
Ring-Joint Gaskets and Grooves for Steel Pipe Flanges B16.20-1973
Nonmetallic Flat Gaskets for Pipe Flanges B16.21-1978
Wrought Copper and Copper Alloy Solder Joint Pressure Fittings B16.22-1989
Cast Copper Alloy Solder Joint Drainage Fittings — DWV B16.23-1984
Bronze Pipe Flanges and Flanged Fittings, Class 150 and 300 ..... B16.24-1979
Buttwelding Ends B16.25-1986
Cast Copper Alloy Fittings for Flared Copper Tubes B16.26-1988
Wrought Steel Buttwelding Short Radius Elbows and Returns B16.28-1986
Wrought Copper and Wrought Copper Alloy Solder Joint Drainage Fittings — DWV B16.29-1986
Cast Copper Alloy Solder Joint Fittings for Sovent® Drainage Systems B16.32-1984
Manually Operated Metallic Gas Valves for Use in Gas Piping Systems Up to 125 psig (Sizes ½ Through 2) B16.33-1990
Valves — Flanged, Threaded, and Welding End B16.34-1988
Orifice Flanges B16.36-1988
Hydrostatic Testing of Control Valves B16.37-1980
Large Metallic Valves for Gas Distribution (Manually Operated, NPS 2½ to 12, 125 psig Maximum) B16.38-1985
Malleable Iron Threaded Pipe Unions, Classes 150, 250, and 300 ..... B16.39-1986
Manually Operated Thermoplastic Gas Shutoffs and Valves in Gas Distribution Systems B16.40-1985
Functional Qualification Requirements for Power Operated Active Valve Assemblies for Nuclear Power Plants ..... B16.41-1983(R1989)
Ductile Iron Pipe Flanges and Flanged Fittings, Class 150 and 300 ..... B16.42-1987
Wrought Copper and Copper Alloy Solder Joint Fittings for Sovent® Drainage Systems B16.43-1982
Cast Iron Fittings for Sovent® Drainage Systems B16.45-1987
Large Diameter Steel Flanges (NPS 26 Through NPS 60) B16.47-1990
Power Piping B31.1-1989
Fuel Gas Piping B31.2-1968
Chemical Plant and Petroleum Refinery Piping B31.3-1990
Liquid Transportation Systems for Hydrocarbons, Liquid Petroleum Gas, Anhydrous Ammonia, and Alcohols B31.4-1989
Refrigeration Piping B31.5-1987
Gas Transmission and Distribution Piping Systems B31.8-1989
Building Services Piping B31.9-1988
Slurry Transportation Piping Systems B31.11-1989
ASME Guide for Gas Transmission and Distribution Piping Systems — 1986 (not an ANSI Standard) .....
Manual for Determining the Remaining Strength of Corroded Pipelines (not an ANSI Standard) B31G-1984
Welded and Seamless Wrought Steel Pipe B36.10M-1985
Stainless Steel Pipe B36.19M-1985
Self-Operated and Power-Operated Safety-Related Valves Functional Specification Standard ..... N278.1-1975(R1984)

The ASME Publications Catalog shows a complete list of all the Standards published by the Society.

The catalog and binders for holding these Standards are available upon request.

Copyright ASME International
Provided by IHS under license with ASME
No reproduction or networking permitted without license from IHS
Not for Resale

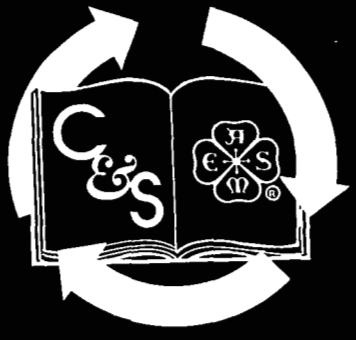

This document is printed
on 50% recycled paper.

50% RECOVERED PAPER MATERIAL means paper waste generated after the completion of the papermaking process, such as postconsumer materials, text books, envelopes, bindery waste, printing waste, cutting and converting waste, butt rolls, obsolete inventories, and rejected unused stock.

ISBN # 0-7918-2090-4

J03290

Copyright ASME International
Provided by IHS under license with ASME
No reproduction or networking permitted without license from IHS

Not for Resale