ASME B16.11-2001
(Revision of ASME B16.11-1996)

FORGED FITTINGS, SOCKET-WELDING AND THREADED

AN AMERICAN NATIONAL STANDARD



The American Society of Mechanical Engineers

Copyright ASME International
Provided by IHS under license with ASME
No reproduction or networking permitted without license from IHS

Not for Resale



The American Society of Mechanical Engineers

AN AMERICAN NATIONAL STANDARD

FORGED FITTINGS, SOCKET-WELDING AND THREADED

ASME B16.11-2001

(Revision of ASME B16.11-1996)

--`-`-`,,`,,`,`,,`---

Copyright ASME International
Provided by IHS under license with ASME
No reproduction or networking permitted without license from IHS

Not for Resale

Date of Issuance: February 1, 2002

The next edition of this Standard is scheduled for publication in 2006. There will be no addenda issued to this Edition.

ASME issues written replies to inquiries concerning interpretations of technical aspects of this Standard.

ASME is the registered trademark of The American Society of Mechanical Engineers.

This code or standard was developed under procedures accredited as meeting the criteria for American National Standards. The Standards Committee that approved the code or standard was balanced to assure that individuals from competent and concerned interests have had an opportunity to participate. The proposed code or standard was made available for public review and comment that provides an opportunity for additional public input from industry, academia, regulatory agencies, and the public-at-large.

ASME does not "approve," "rate," or "endorse" any item, construction, proprietary device, or activity.

ASME does not take any position with respect to the validity of any patent rights asserted in connection with any items mentioned in this document, and does not undertake to insure anyone utilizing a standard against liability for infringement of any applicable letters patent, nor assume any such liability. Users of a code or standard are expressly advised that determination of the validity of any such patent rights, and the risk of infringement of such rights, is entirely their own responsibility.

Participation by federal agency representative(s) or person(s) affiliated with industry is not to be interpreted as government or industry endorsement of this code or standard.

ASME accepts responsibility for only those interpretations of this document issued in accordance with the established ASME procedures and policies, which precludes the issuance of interpretations by individuals.

No part of this document may be reproduced in any form,
in an electronic retrieval system or otherwise,
without the prior written permission of the publisher.

The American Society of Mechanical Engineers
Three Park Avenue, New York, NY 10016-5990

Copyright © 2002 by
THE AMERICAN SOCIETY OF MECHANICAL ENGINEERS
All Rights Reserved
Printed in U.S.A.

Copyright ASME International
Provided by IHS under license with ASME
No reproduction or networking permitted without license from IHS
Not for Resale

FOREWORD

The Sectional Committee on the Standardization of Pipe Flanges and Fittings, B16, organized in 1920 under the procedure of the American Standards Association (ASA) appointed a subgroup of Subcommittee 3 (now Subcommittee F) to initiate the standardization of welding fittings in May, 1937. The first meeting of this group was held later that month, and at its meeting in December, 1938, in New York, it was agreed to undertake the standardization of dimensions of socket-welding fittings and to refer this project to a new drafting subgroup. One of the most important dimensions of this type of fitting requiring standardization was considered to be the dimension from the centerline of the fitting to the bottom of the socket, since from the stand-point of the designing engineer, this dimension governs the location of adjacent pipe with reference to the entire piping layout. Another important item for consideration was the welding fillet dimensions.

The drafting subgroup held meetings in Chicago, Detroit, and New York in March, 1939, and May and October, 1940, respectively, and at the last named meeting the completed draft of the proposed standard was discussed and further revisions were suggested. When applied to the September, 1940, draft, these changes produced the May, 1941, draft which was prepared for distribution to industry for criticism and comment.

This distribution resulted in a number of helpful comments. The members of the subgroup agreed by mail that many of the changes suggested should be incorporated in the revised draft (December, 1941). Progress on the approval of the standard was delayed by the war after which a few more changes were added to make the proposal acceptable to all concerned. The revised draft (April, 1946) was then submitted to the members of the sectional committee for letter ballot vote.

Following the approval of the sectional committee, the proposed standard was next approved by the sponsor bodies, and presented to the ASA with recommendation for approval as an American Standard. This designation was given on December 9, 1946.

In 1960, it was agreed that the standard needed a complete revision and simultaneously that it should be expanded to cover threaded fittings and plugs, then covered by MSS SP-49 and SP-50. A Task Force worked diligently for four years before arriving at a draft which it felt was acceptable. They also found that ratings were outdated and eliminated the 4000 lb classes of threaded fittings, assigned pressure-temperature ratings for a number of materials, and converted the socket-weld fitting ratings to 3000 and 6000 lb. Following approval by the Sectional Committee and Sponsors, ASA approval was granted on January 28, 1966.

Following designation changes of ASA to ANSI and Sectional Committee to Standards Committee, Subcommittee 6 began consideration of changes in 1969. Early in 1972, changes in the pressure class designations, materials, and clarification of wording were agreed upon and submitted for approval. This approach was granted on June 20, 1973.

The work of development of the 1980 edition of B16.11 began in 1975 when the committee began consideration of comments and proposals for change that were received. The development procedure was arduous in that a number of ballots were taken which elicited many additional comments and counter proposals. The major changes included an expanded scope for better definition, requirements for conformance marking, a nonmandatory annex with provisions for proof or burst testing and the inclusion of metric equivalents.

Copyright ASME International
Provided by IHS under license with ASME
No reproduction or networking permitted without license from IHS
Not for Resale

Following approval by the Standards Committee and Co-Secretariat, final approval by ANSI was granted on October 6, 1980.

In 1982, American National Standards Committee B16 was reorganized as an ASME Committee operating under procedures accredited by ANSI. The 1991 edition of the standard, re-titled ''Forged Fittings, Socket-Welding and Threaded,'' incorporated forging material listed in Table 1 of ASME B16.34-1988, including Group 3 material which was not previously covered in B16.11. The 1991 edition established U.S. customary units as the standard. Other clarifying and editorial revisions were made in order to improve the text. Following approval by the Standards Committee and ASME, final approval by ANSI was granted on March 4, 1991.

In 1996, metric dimensions were added as an independent but equal standard to the inch units. Following approval by the Standards Committee and ASME, this revision to the 1991 edition of this Standard was approved as an American National Standard by ANSI on December 16, 1996, with the new designation ASME B16.11-1996.

In 2000, the Standards Committee, ASME, and ANSI approved an addenda to this Standard to remove partial compliance fittings and nonstandard material requirements. Due to an ASME policy change concerning the publishing of addenda, the intended addenda changes have been incorporated into this B16.11-2001 Edition.

Suggestions for improvement of this Standard are welcome. They should be addressed to the Secretary, ASME B107 Committee, Three Park Avenue, New York, NY 10016.

This Standard was approved as an American National Standard on November 27, 2001.

Copyright ASME International
Provided by IHS under license with ASME
No reproduction or networking permitted without license from IHS
Not for Resale

ASME B16 COMMITTEE
Standardization of Valves, Flanges, Fittings, Gaskets, and Valve Actuators

(The following is a roster of the Committee at the time of approval of this Standard.)

OFFICERS

H. R. Sonderegger, *Chair*
M. L. Nayyar, *Vice Chair*
P. A. Reddington *Secretary*

COMMITTEE PERSONNEL

R. W. Barnes, Anric Enterprises
W. B. Bedesem, Exxon Mobile Research & Engineering Co.
R. R. Brodin, Fisher Controls International, Inc.
M. A. Clark, Nibco, Inc.
A. Cohen, Arthur Cohen & Associates
C. E. Floren, Mueller Co.
D. R. Frikken, Solutia, Inc.
A. Hamilton, ABS Plaza
M. L. Henderson, Coffer Corp.
G. A. Jolly, Vogt Valve Co.
W. G. Knecht, Retired
R. Koester, The William Powell Co.
R. D. Manning, U.S. Coast Guard
W. N. McLean, Newco Valves
M. L. Nayyar, Bechtel Power Corp.
P. A. Reddington, The American Society of Mechanical Engineers
R. A. Schmidt, Trinity-Ladish
H. R. Sonderegger, Anvil International, Inc.
W. M. Stephan, Flexitallic LP
T. F. Stroud, Ductile Iron Pipe Research Association
R. E. White, Richard E. White & Associates PC
D. A. Williams, Southern Company Services
W. R. Worley, Consultant

SUBCOMMITTEE F — STEEL THREADED AND WELDING FITTINGS

G. A. Jolly, *Chair,* Vogt Valve Co.
S. J. Rossi, *Secretary,* The American Society of Mechanical Engineers
A. Appleton, Alloy Stainless Product Company, Inc.
G. A. Cuccio, Capitol Manufacturing Co.
J. P. Ellenberger, WFI International, Inc.
D. R. Frikken, Solutia, Inc.
R. E. Johnson, Consultant
R. C. Lafferty, Penna Machine Works, Inc.

Copyright ASME International
Provided by IHS under license with ASME
No reproduction or networking permitted without license from IHS
Not for Resale

D. H. Monroe, Consultant
R. A. Schmidt, Trinity-Ladish
H. R. Sonderegger, Anvil International, Inc.
K. Umemura, Benkan Corp.
W. R. Worley, Consultant

Copyright ASME International
Provided by IHS under license with ASME
No reproduction or networking permitted without license from IHS
Not for Resale

CORRESPONDENCE WITH THE B16 COMMITTEE

General. ASME Standards are developed and maintained with the intent to represent the consensus of concerned interests. As such, users of this Standard may interact with the Committee by requesting interpretations, proposing revisions, and attending Committee meetings. Correspondence should be addressed to:

Secretary, B16 Main Committee
The American Society of Mechanical Engineers
Three Park Avenue
New York, NY 10016-5990

Proposing Revisions. Revisions are made periodically to the Standard to incorporate changes that appear necessary or desirable, as demonstrated by the experience gained from the application of the Standard. Approved revisions will be published periodically.

The Committee welcomes proposals for revisions to this Standard. Such proposals should be as specific as possible, citing the paragraph number(s), the proposed wording, and a detailed description of the reasons for the proposal, including any pertinent documentation.

Interpretations. Upon request, the B16 Committee will render an interpretation of any requirement of the Standard. Interpretations can only be rendered in response to a written request sent to the Secretary of the B16 Main Committee.

The request for interpretation should be clear and unambiguous. It is further recommended that the inquirer submit his/her request in the following format:

Subject: Cite the applicable paragraph number(s) and the topic of the inquiry.

Edition: Cite the applicable edition of the Standard for which the interpretation is being requested.

Question: Phrase the question as a request for an interpretation of a specific requirement suitable for general understanding and use, not as a request for an approval of a proprietary design or situation. The inquirer may also include any plans or drawings, which are necessary to explain the question; however, they should not contain proprietary names or information.

Requests that are not in this format will be rewritten in this format by the Committee prior to being answered, which may inadvertently change the intent of the original request.

ASME procedures provide for reconsideration of any interpretation when or if additional information that might affect an interpretation is available. Further, persons aggrieved by an interpretation may appeal to the cognizant ASME Committee or Subcommittee. ASME does not "approve," "certify," "rate," or "endorse" any item, construction, proprietary device, or activity.

Attending Committee Meetings. The B16 Main Committee regularly holds meetings, which are open to the public. Persons wishing to attend any meeting should contact the Secretary of the B16 Main Committee.

Copyright ASME International
Provided by IHS under license with ASME
No reproduction or networking permitted without license from IHS
Not for Resale

CONTENTS

Foreword iii
Committee Roster v
Correspondence With the B16 Committee vii

1 Scope 1
1.1 General 1
1.2 References 1
1.3 Service Conditions 1
1.4 Welding 1
1.5 Standard Units 1

2 Pressure Ratings 1
2.1 General 1
2.2 Pressure Test Capability 2

3 Size and Type 3
3.1 General 3
3.2 Reducing Fitting Size 3

4 Marking 3
4.1 General 3

5 Material 4
5.1 Standard Materials 4

6 Dimensions 4
6.1 General 4
6.2 Socket Fittings 4
6.3 Threaded Fittings 4
6.4 Collars 4
6.5 Reducing Fittings 4

7 Tolerances 7
7.1 Additional Tolerances 7

8 Testing 7
8.1 Proof Testing 7

Figures
1 Method of Designating Outlets of Reducing Tees and Crosses 3
2 Welding Gap and Minimum Flat Dimensions for Socket-Welding Fittings 6

Copyright ASME International
Provided by IHS under license with ASME
No reproduction or networking permitted without license from IHS
Not for Resale

Tables

1A Types of Fittings by Class Designation and DN (Nominal Size) Range 2
1B Types of Fittings by Class Designation and NPS Size Range 2
2 Correlation of Fittings Class With Schedule Number or Wall Designation of Pipe for Calculation of Ratings 3
3 Nominal Wall Thickness of Schedule 160 and Double Extra Strong Pipe 3
4 Socket-Welding Fittings 5
5 Forged Threaded Fittings 6
6 Threaded Fittings 7
7 Plugs and Bushings 8

Mandatory Appendices

I Inch Tables 9
II References 14

Nonmandatory Appendix

A Quality System Program 15

Copyright ASME International
Provided by IHS under license with ASME
No reproduction or networking permitted without license from IHS
Not for Resale

Copyright ASME International
Provided by IHS under license with ASME
No reproduction or networking permitted without license from IHS
Not for Resale

FORGED FITTINGS, SOCKET-WELDING AND THREADED

1 SCOPE

1.1 General

This Standard covers ratings, dimensions, tolerances, marking and material requirements for forged fittings, both socket-welding and threaded, as illustrated in Tables 4 through 7 and I1 through I4, inclusive.

1.1.1 Fitting Types/Configuration. Types of fittings covered by this Standard are shown in Tables 1A and 1B, by class and size range. Fittings shown in Tables 4 through 7 and I1 through I4 may also be made with combinations of socket-welding and threaded ends.

1.1.2 Special Fittings. Fittings with special dimensions, threads or counterbores may be made by agreement between the manufacturer and the purchaser. When such fittings meet all other stipulations of this Standard, they shall be considered in compliance therewith, provided they are appropriately marked (see para. 4).

1.1.3 Quality Systems. Nonmandatory requirements relating to the product manufacturer's Quality System Program are described in Nonmandatory Appendix A.

1.2 References

1.2.1 Referenced Standards. Standards and specifications adopted by reference in this Standard are shown in Mandatory Appendix II, which is part of this Standard. It is not considered practical to identify the specific edition of each standard and specification in the individual references. Instead, the specific edition reference is identified in Mandatory Appendix II. A fitting made in conformance and conforming to this Standard, in all other respects, will be considered to be in conformance to the Standard, even though the edition reference may be changed in a subsequent addendum to or revision of the Standard.

1.2.2 Codes and Regulations. A fitting used under the jurisdiction of the ASME Boiler and Pressure Vessel Code, the ASME Code for Pressure Piping, or a governmental regulation is subject to any limitation of that code or regulation. This includes any maximum temperature limitation, or rule governing the use of a material at low temperature, or provisions for operation at a pressure exceeding the ratings in this Standard.

1.3 Service Conditions

Criteria for selection of fitting types and materials suitable for particular fluid service are not within the scope of this Standard.

1.4 Welding

Installation welding requirements are not within the scope of this Standard. Installation welding shall be done in accordance with the applicable piping Code or regulation covering the piping system into which the fittings are installed.

1.5 Standard Units

The values stated in either metric units or inch units are to be regarded separately as standard. Within the text, the inch units are shown in parentheses. The values stated in each system are not exact equivalents; therefore, each system must be used independently of the other. Combining values from the two systems may result in nonconformance with the standard.

Tables 4 through 7 show fittings dimensional requirements in millimeters. Tables I1 through I4 show the dimensional requirements for inch dimensioned fittings.

2 PRESSURE RATINGS

2.1 General

These fittings shall be designated as Class 2000, 3000, and 6000 for threaded end fittings and Class 3000, 6000, and 9000 for socket-weld end fittings.

2.1.1 Basis of Rating. The schedule of pipe corresponding to each Class of fitting for rating purposes is shown in Table 2. Design temperature and other service

Copyright ASME International
Provided by IHS under license with ASME
No reproduction or networking permitted without license from IHS
Not for Resale

TABLE 1A TYPES OF FITTINGS BY CLASS DESIGNATION AND DN (NOMINAL SIZE) RANGE

	Socket-Welding			Threaded		
	Class Designation			Class Designation		
Description	3000	6000	9000	2000	3000	6000
45 deg, 90 deg elbows,	DN6–DN100	DN6–DN50	DN15–DN50	DN6–DN100	DN6–DN100	DN6–DN100
tees, crosses, coupling,	DN6–DN100	DN6–DN50	DN15–DN50	DN6–DN100	DN6–DN100	DN6–DN100
half-coupling, and cap	DN6–DN100	DN6–DN50	DN15–DN50	. . .	DN6–DN100	DN6–DN100
	DN6–DN100	DN6–DN100	DN15–DN50	. . .	DN6–DN100	DN6–DN100
Square, hex, round plug,	. . .	. . .	. . .	DN6–DN100 [Note (1)]		
hex, and flush bushing	. . .	. . .	. . .	DN6–DN100 [Note (1)]		

NOTE:
(1) Plugs and bushings are not identified by class designation. They may be used for ratings up through Class 6000 designation.

TABLE 1B TYPES OF FITTINGS BY CLASS DESIGNATION AND NPS SIZE RANGE

	Socket-Welding			Threaded		
	Class Designation			Class Designation		
Description	3000	6000	9000	2000	3000	6000
45 deg, 90 deg elbow, tees,	1/8–4	1/8–2	1/2–2	1/8–4	1/8–4	1/8–4
crosses, coupling, half-	1/8–4	1/8–2	1/2–2	1/8–4	1/8–4	1/8–4
coupling, and cap	1/8–4	1/8–2	1/2–2	. . .	1/8–4	1/8–4
	1/8–4	1/8–2	1/2–2	. . .	1/8–4	1/8–4
Square, hex, round plug,	. . .	. . .	. . .	1/8–4 [Note (1)]		
hex, and flush bushing	. . .	. . .	. . .	1/8–4 [Note (1)]		

NOTE:
(1) Plugs and bushings are not identified by class designation. They may be used for ratings up through Class 6000 designation.

conditions shall be limited as provided by the applicable piping code or regulation for the material of construction of the fitting. Within these limits the maximum allowable pressure of a fitting shall be that computed for straight seamless pipe of equivalent material (as shown by comparison of composition and mechanical properties in the respective material specifications). The wall thickness used in such computation shall be that tabulated in ASME B36.10M for the size and applicable schedule of pipe reduced by applicable manufacturing tolerances and other allowances (e.g., threaded allowances).

Any corrosion allowance and any variation in allowable stress due to temperature or other design shall be applied to the pipe and fitting alike.

2.1.2 Nonstandard Pipe Wall Thickness. Since ASME B36.10M does not include Schedule 160 nor Double Extra Strong thickness for DN 6, 8, and 10 (NPS 1/8, 1/4, and 3/8), the values in Table 3 may be used as the nominal wall thicknesses of the pipe for rating purposes.

2.1.3 Combination End Fittings. The Class for fittings made with combinations of socket-welding and threaded ends shall be based on the end configuration that has the lowest rating from Table 2.

2.2 Pressure Test Capability

Pressure testing is not required by this Standard but the fittings shall be capable of withstanding a hydrostatic test pressure required by the applicable piping code for seamless pipe of material equivalent to the fitting forging and of the schedule or wall thickness correlated with the fitting Class and end connection of Table 2.

Copyright ASME International
Provided by IHS under license with ASME
No reproduction or networking permitted without license from IHS

Not for Resale

TABLE 2 CORRELATION OF FITTINGS CLASS WITH SCHEDULE NUMBER OR WALL DESIGNATION OF PIPE FOR CALCULATION OF RATINGS

Class Designation of Fitting	Type of Fitting	Pipe Used for Rating Basis [Note (1)]	
		Schedule No.	Wall Designation
2000	Threaded	80	XS
3000	Threaded	160	. . .
6000	Threaded	. . .	XXS
3000	Socket-welding	80	XS
6000	Socket-welding	160	. . .
9000	Socket-welding	. . .	XXS

NOTE:
(1) This table is not intended to restrict the use of pipe of thinner or thicker wall with fittings. Pipe actually used may be thinner or thicker in nominal wall than that shown in Table 2. When thinner pipe is used, its strength may govern the rating. When thicker pipe is used (e.g., for mechanical strength), the strength of the fitting governs the rating.

TABLE 3 NOMINAL WALL THICKNESS OF SCHEDULE 160 AND DOUBLE EXTRA STRONG PIPE

DN	NPS	Schedule 160		XXS	
		mm	in.	mm	in.
6	1/8	3.15	0.124	4.83	0.190
8	1/4	3.68	0.145	6.05	0.238
10	3/8	4.01	0.158	6.40	0.252

3 SIZE AND TYPE

3.1 General

The following table shows nominal pipe size (NPS) used for inch dimensioned fittings versus nominal diameter (DN), used for millimeter dimensioned fittings.

NPS	1/8	1/4	3/8	1/2	3/4	1
DN	6	8	10	15	20	25
NPS	1 1/4	1 1/2	2	2 1/2	3	4
DN	32	40	50	65	80	100

3.2 Reducing Fitting Size

In the case of reducing tees and crosses, the size of the largest run opening shall be given first, followed by the size of the opening at the opposite end of the run. Where the fitting is a tee, the size of the branch is given last. Where the fitting is a cross, the largest side-outlet is the third dimension given, followed by the opening opposite. The line sketches, Fig. 1, illustrate how the reducing fittings are read.

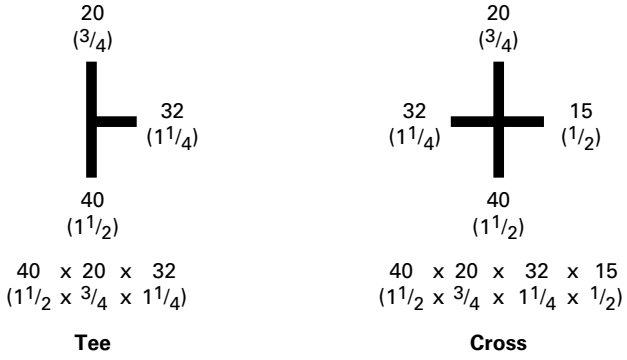

FIG. 1 METHOD OF DESIGNATING OUTLETS OF REDUCING TEES AND CROSSES (See para. 3.2)

4 MARKING

4.1 General

Each fitting shall be permanently marked with the required identification by raised lettering and/or by stamping, electro-etching, or vibro-tool marking on the collar portion, raised pad or raised boss portion of the forging. Cylindrical fittings shall be marked on the O.D. or on the end of the fitting in a location such that the marking will not be obliterated as a result of welding installation. The marking of bushings and plug is not required by this Standard.

4.1.1 Specific Marking. The marking shall include (but is not limited to) the following:

(a) Manufacturer's Name or Trademark

(b) Material Identification. Material shall be identified in accordance with the marking requirements of either the appropriate ASTM Fittings Specification A 234, A 403, A 420, or B 366, or the appropriate ASTM Forging Specifications A 105, A 182, A 350, B 160, B 164, or other applicable forging Specification of Table 1, ASME B16.34 (see para. 5.1).

(c) Product Conformance. Fittings covered under para. 1.1.1 shall be marked with either the ASTM Fittings Specification material identification (e.g., "WP_____") or the symbol "B16" to denote conformance to this Standard. Fittings covered under para. 1.1.2 shall be marked B16SPLD.

Copyright ASME International
Provided by IHS under license with ASME
No reproduction or networking permitted without license from IHS
Not for Resale

(d) Class Designation. 2000, 3000, 6000, or 9000, as applicable. Alternatively, the designation 2M, 3M, 6M, or 9M, as applicable, may be used where M stands for 1000.

(e) Size. The nominal pipe size related to the end connections.

4.1.2 Omission of Markings. Where size and shape of fittings do not permit all of the above markings, they may be omitted in the reverse order given above.

5 MATERIAL

5.1 Standard Materials

The material for fittings shall consist of forgings, bars, seamless pipe, or tubular products which conform to the requirements for melting process, chemical composition requirements, and mechanical property requirements of the forging product form listed in Table 1, ASME B16.34, including notes.

6 DIMENSIONS

6.1 General

Unless otherwise noted, the dimensions for socket-welding fittings given in Tables 4 and I1 and the dimensions for threaded fittings given in Tables 5, 6, 7, I2, I3, and I4 are nominal values and subject to the designated manufacturing tolerance.

6.2 Socket Fittings

6.2.1 Body Wall Thickness. The body wall thickness of socket-welding fittings shall be equal to or greater than the values, *G*, shown in Tables 4 and I1.

6.2.2 Socket Wall Thickness. The socket wall average thickness and minimum thickness shall be no less than the corresponding values, *C*, shown in Tables 4 and I1.

6.2.3 Socket Position. The fixed position for the bottom of the socket with reference to the centerline of the socket-welding fitting shall be maintained as required by the dimensions, *A*, of Tables 4 and I1. For reducing fittings, see para. 6.5.

6.2.4 Socket Depth. The socket depth shall be no less than the minimum values, *J*, shown in Tables 4 and I1.

6.2.5 Socket Bore. The inside surface of the socket bore shall present a good workmanlike finish that is free of burrs.

6.2.6 Perpendicularity. The end flats of socket-welding fittings shall be at right angles to the socket axis.

6.2.7 Width. The forging radius shall not reduce the width of the flat welding surface to less than the value shown in Fig. 2.

6.3 Threaded Fittings

6.3.1 Wall Thickness. The body or end wall thickness of threaded fittings shall be equal to or greater than the minimum values, *G*, as shown in Tables 5, 6, I2, or I3.

6.3.2 Internal Threading. All fittings with internal threads shall be threaded with American National Standard Taper Pipe Threads (ASME B1.20.1). Variations in threading shall be limited to one turn large or one turn small from the gaging notch when using working gages. The reference point for gaging is the starting end of the fitting, providing the chamfer does not exceed the major diameter of the internal thread. When a chamfer on the internal thread exceeds this limit, the reference point becomes the last thread scratch on the chamfer cone.

6.3.3 External Threads. All externally threaded fittings shall be threaded with American National Standard Taper Pipe Threads (ASME B1.20.1) and the variation in threading shall be limited to one turn large or one turn small from the gage face of ring when using working gages. The reference point for gaging is the end of the thread.

6.3.4 Countersink or Chamfer. All internal threads shall be countersunk a distance not less than one-half the pitch of the thread at an angle of approximately 45 deg with the axis of the thread, and all external threads shall be chamfered at an angle of 30 deg to 45 deg from the axis, for the purpose of easier entrance in making a joint and for protection of the thread. Countersinking and chamfering shall be concentric with the threads. The length of threads specified in all tables shall be measured to include the countersink or chamfer.

6.4 Collars

End collars of both socket-welding and threaded fittings shall be such that they overlap the crotch area as illustrated in the sketches in Tables 4, 5, I1, and I2.

6.5 Reducing Fittings

Reducing fittings shall have the same center-to-end, center-to-bottom of socket, band diameter, and outside

Copyright ASME International
Provided by IHS under license with ASME
No reproduction or networking permitted without license from IHS

Not for Resale

Copyright ASME International
Provided by IHS under license with ASME
No reproduction or networking permitted without license from IHS

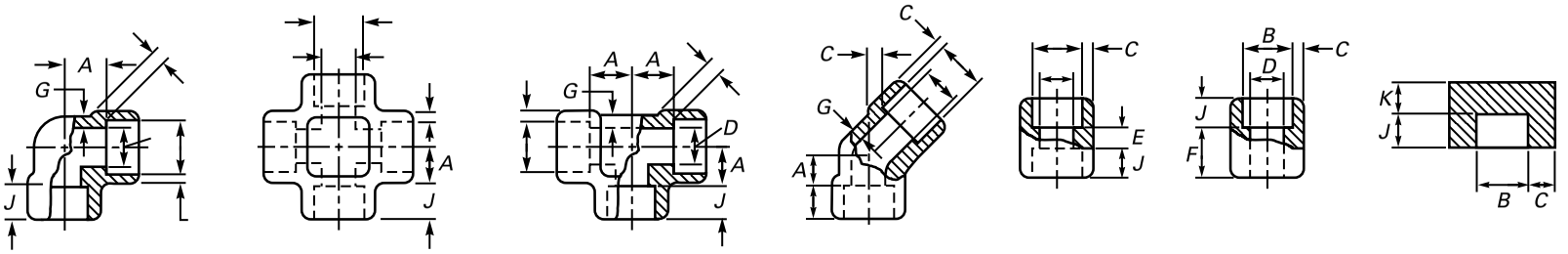

90 deg Elbow | Cross | Tee | 45 deg Elbow | Coupling | Half-Coupling | Cap

TABLE 4 SOCKET-WELDING FITTINGS

DN	Nominal Pipe Size	Socket Bore Diameter, *B* [Note (1)]	Bore Diameter of Fittings, *D* [Note (1)]			Socket Wall Thickness, *C* [Note (2)]						Body Wall, *G*			Min. Depth of Socket, *J*	Center to Bottom of Socket, *A*						Laying Lengths		Tolerances, ±			End Wall Thickness, $K_{min.}$		
			Class Designation			3000		6000		9000		Class Designation				90 deg Elbows, Tees, and Crosses			45 deg Elbows								Class Designation		
						Class Designation										Class Designation						Couplings, *E*	Half Couplings, *F*	*A*	*E*	*F*			
			3000	6000	9000	Avg.	Min.	Avg.	Min.	Avg.	Min.	3000	6000	9000		3000	6000	9000	3000	6000	9000						3000	6000	9000
6	1/8	11.2	7.6	4.8	...	3.18	3.18	3.96	3.43	...	...	2.41	3.15	...	9.5	11.0	11.0	...	8.0	8.0	...	6.5	16.0	1.0	1.5	1.0	4.8	6.4	...
		10.8	6.1	3.2	...																								
8	1/4	14.6	10.0	7.1	...	3.78	3.30	4.60	4.01	...	...	3.02	3.68	...	9.5	11.0	13.5	...	8.0	8.0	...	6.5	16.0	1.0	1.5	1.0	4.8	6.4	...
		14.2	8.5	5.6	...																								
10	3/8	18.0	13.3	9.9	...	4.01	3.50	5.03	4.37	...	...	3.20	4.01	...	9.5	13.5	15.5	...	8.0	11.0	...	6.5	17.5	1.5	3.0	1.5	4.8	6.4	...
		17.6	11.8	8.4	...																								
15	1/2	22.2	16.6	12.5	7.2	4.67	4.09	5.97	5.18	9.35	8.18	3.73	4.78	7.47	9.5	15.5	19.0	25.5	11.0	12.5	15.5	9.5	22.5	1.5	3.0	1.5	6.4	7.9	11.2
		21.8	15.0	11.0	5.6																								
20	3/4	27.6	21.7	16.3	11.8	4.90	4.27	6.96	6.04	9.78	8.56	3.91	5.56	7.82	12.5	19.0	22.5	28.5	13.0	14.0	19.0	9.5	24.0	1.5	3.0	1.5	6.4	7.9	12.7
		27.2	20.2	14.8	10.3																								
25	1	34.3	27.4	21.5	16.0	5.69	4.98	7.92	6.93	11.38	9.96	4.55	6.35	9.09	12.5	22.5	27.0	32.0	14.0	17.5	20.5	12.5	28.5	2.0	4.0	2.0	9.6	11.2	14.2
		33.9	25.9	19.9	14.4																								
32	1 1/4	43.1	35.8	30.2	23.5	6.07	5.28	7.92	6.93	12.14	10.62	4.85	6.35	9.70	12.5	27.0	32.0	35.0	17.5	20.5	22.5	12.5	30.0	2.0	4.0	2.0	9.6	11.2	14.2
		42.7	34.3	28.7	22.0																								
40	1 1/2	49.2	41.6	34.7	28.7	6.35	5.54	8.92	7.80	12.70	11.12	5.08	7.14	10.15	12.5	32.0	38.0	38.0	20.5	25.5	25.5	12.5	32.0	2.0	4.0	2.0	11.2	12.7	15.7
		48.8	40.1	33.2	27.2																								
50	2	61.7	53.3	43.6	38.9	6.93	6.04	10.92	9.50	13.84	12.12	5.54	8.74	11.07	16.0	38.0	41.0	54.0	25.5	28.5	28.5	19.0	41.0	2.0	4.0	2.0	12.7	15.7	19.0
		61.2	51.7	42.1	37.4																								
65	2 1/2	74.4	64.2	...	...	8.76	7.67	...	...	...	...	7.01	...	...	16.0	41.0	...	...	28.5	...	...	19.0	43.0	2.5	5.0	2.5	15.7	19.0	...
		73.9	61.2		...																								
80	3	90.3	79.4	...	...	9.52	8.30	...	...	...	...	7.62	...	...	16.0	57.0	...	...	32.0	...	...	19.0	44.5	2.5	5.0	2.5	19.0	22.4	...
		89.8	76.4	...	...																								
100	4	115.7	103.8	...	...	10.69	9.35	...	...	...	...	8.56	...	...	19.0	66.5	...	...	41.0	...	...	19.0	48.0	2.5	5.0	2.5	22.4	28.4	...
		115.2	100.7	...	...																								

GENERAL NOTE: Dimensions are in millimeters.

NOTES:
(1) Upper and lower values for each size are the respective maximum and minimum dimensions.
(2) Average of socket wall thickness around periphery shall be no less than listed values. The minimum values are permitted in localized areas.

Not for Resale

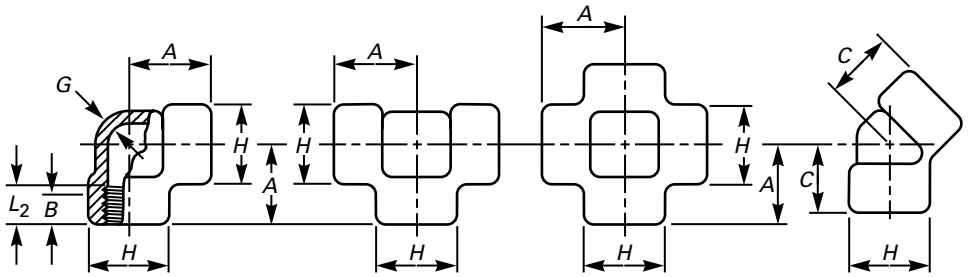

90 deg Elbow | Tee | Cross | 45 deg Elbow

TABLE 5 FORGED THREADED FITTINGS

DN	Nominal Pipe Size	Center-to-End Elbows, Tees, Crosses, *A*			Center-to-End 45 deg Elbow, *C*			Outside Diameter of Band, *H*			Min. Wall Thickness, *G*			Min. Length of Thread [Note (1)]	
		2000	3000	6000	2000	3000	6000	2000	3000	6000	2000	3000	6000	*B*	L_2
6	1/8	21	21	25	17	17	19	22	22	25	3.18	3.18	6.35	6.4	6.7
8	1/4	21	25	28	17	19	22	22	25	33	3.18	3.30	6.60	8.1	10.2
10	3/8	25	28	33	19	22	25	25	33	38	3.18	3.51	6.98	9.1	10.4
15	1/2	28	33	38	22	25	28	33	38	46	3.18	4.09	8.15	10.9	13.6
20	3/4	33	38	44	25	28	33	38	46	56	3.18	4.32	8.53	12.7	13.9
25	1	38	44	51	28	33	35	46	56	62	3.68	4.98	9.93	14.7	17.3
32	1 1/4	44	51	60	33	35	43	56	62	75	3.89	5.28	10.59	17.0	18.0
40	1 1/2	51	60	64	35	43	44	62	75	84	4.01	5.56	11.07	17.8	18.4
50	2	60	64	83	43	44	52	75	84	102	4.27	7.14	12.09	19.0	19.2
65	2 1/2	76	83	95	52	52	64	92	102	121	5.61	7.65	15.29	23.6	28.9
80	3	86	95	106	64	64	79	109	121	146	5.99	8.84	16.64	25.9	30.5
100	4	106	114	114	79	79	79	146	152	152	6.55	11.18	18.67	27.7	33.0

GENERAL NOTE: Dimensions are in millimeters.

NOTE:

(1) Dimension *B* is minimum length of perfect thread. The length of useful thread (*B* plus threads with fully formed roots and flat crests) shall not be less than L_2 (effective length of external thread) required by American National Standard for Pipe Threads (ASME B1.20.1). See para. 6.3.

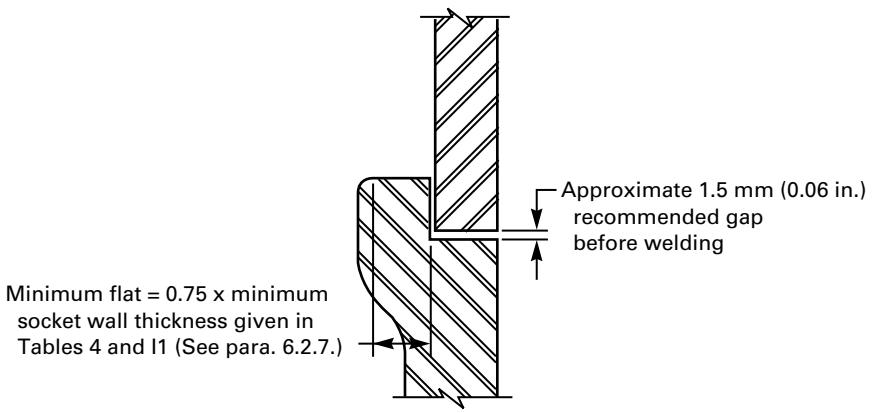

FIG. 2 WELDING GAP AND MINIMUM FLAT DIMENSIONS FOR SOCKET-WELDING FITTINGS

Copyright ASME International
Provided by IHS under license with ASME
No reproduction or networking permitted without license from IHS
Not for Resale

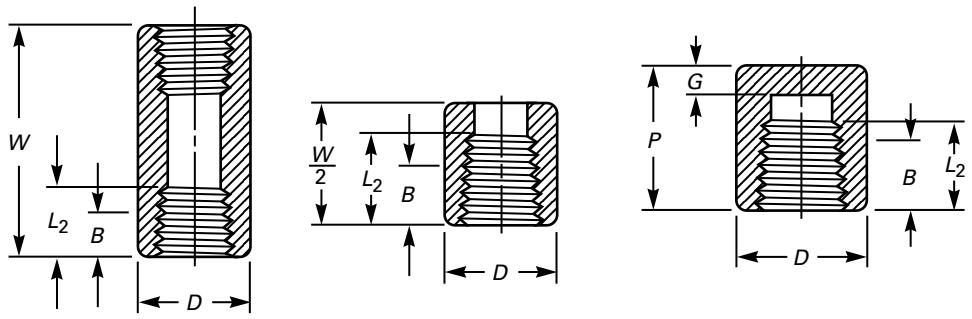

Coupling Half-Coupling Cap

TABLE 6 THREADED FITTINGS

DN	Nominal Pipe Size	End-to-End Couplings, *W*	End-to-End Caps, *P*		Outside Diameter, *D*		Min. End Wall Thickness, *G*		Min. Length of Thread [Note (1)]	
		3000 and 6000	3000	6000	3000	6000	3000	6000	*B*	L_2
6	1/8	32	19	. . .	16	22	4.8	. . .	6.4	6.7
8	1/4	35	25	27	19	25	4.8	6.4	8.1	10.2
10	3/8	38	25	27	22	32	4.8	6.4	9.1	10.4
15	1/2	48	32	33	28	38	6.4	7.9	10.9	13.6
20	3/4	51	37	38	35	44	6.4	7.9	12.7	13.9
25	1	60	41	43	44	57	9.7	11.2	14.7	17.3
32	1 1/4	67	44	46	57	64	9.7	11.2	17.0	18.0
40	1 1/2	79	44	48	64	76	11.2	12.7	17.8	18.4
50	2	86	48	51	76	92	12.7	15.7	19.0	19.2
65	2 1/2	92	60	64	92	108	15.7	19.0	23.6	28.9
80	3	108	65	68	108	127	19.0	22.4	25.9	30.5
100	4	121	68	75	140	159	22.4	28.4	27.7	33.0

GENERAL NOTES:
(a) Dimensions are in millimeters.
(b) Class 2000 and DN6 Class 6000 couplings, half couplings, and caps are not included in this Standard.

NOTE:
(1) Dimension *B* is minimum length of perfect thread. The length of useful thread (*B* plus thread with fully formed roots and flat crests) shall not be less than L_2 (effective length of external thread) required by American National Standard for Pipe Threads (ASME B1.20.1). See para. 6.3.

diameters as the uniform size fitting corresponding to the largest size end connection of the reducing fitting.

7 TOLERANCES

7.1 Additional Tolerances

Tolerances in addition to those listed in Tables 4, 5, 6, 7, I1, I2, I3, and I4.

7.1.1 Concentricity of Bores. The socket and fitting bores shall be concentric within a tolerance of 0.8 mm (0.03 in.) for all sizes. Opposite socket bores shall be concentric within a tolerance of 1.5 mm (0.06 in.) for all sizes.

7.1.2 Coincidence of Axes. The maximum allowable variation in the alignment of the fitting bore and socket bore axes shall be 1.0 mm in 200 mm (0.06 in. in 1 ft). The maximum allowable variation in alignment of threads shall be 1.0 mm in 200 mm (0.06 in. in 1 ft).

8 TESTING

8.1 Proof Testing

Proof testing for fittings made to this Standard is not required.

Copyright ASME International
Provided by IHS under license with ASME
No reproduction or networking permitted without license from IHS Not for Resale

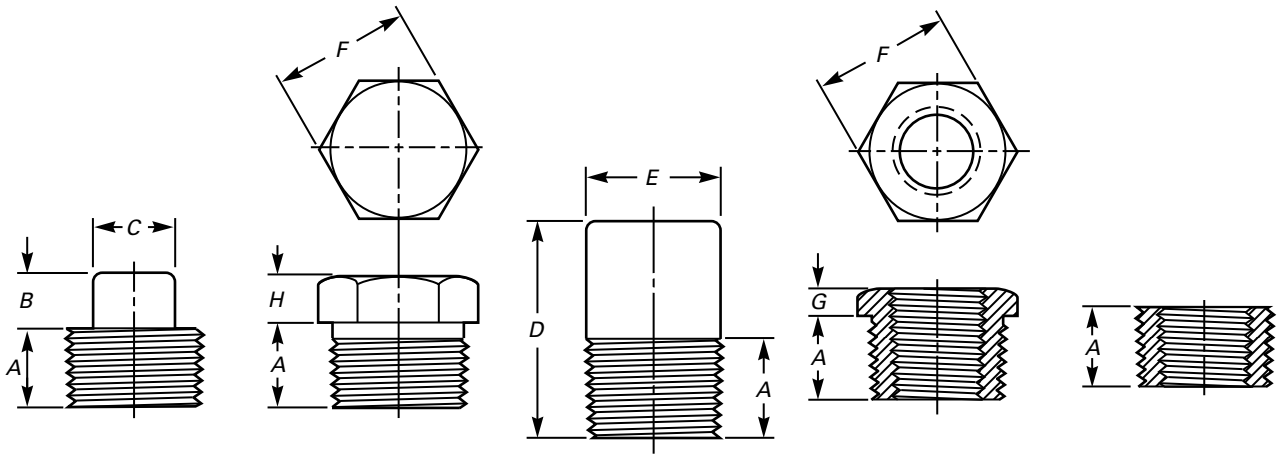

Square Head Plug | **Hex Head Plug** | **Round Head Plug** | **Hex Head Bushing [Note (1)]** | **Flush Bushing**

TABLE 7 PLUGS AND BUSHINGS

			Square Head Plugs		Round Head Plugs		Hex Plugs and Bushings		
								Min. Hex Height	
DN	Nominal Pipe Size	Min. Length, *A*	Min. Square Height, *B*	Min. Width Flats, *C*	Nominal Head Diameter, *E*	Min. Length, *D*	Nominal Width Flats, *E*	Bushing, *G*	Plug, *H*
6	1/8	10	6	7	10	35	11	. . .	6
8	1/4	11	6	10	14	41	16	3	6
10	3/8	13	8	11	18	41	18	4	8
15	1/2	14	10	14	21	44	22	5	8
20	3/4	16	11	16	27	44	27	6	10
25	1	19	13	21	33	51	36	6	10
32	1 1/4	21	14	24	43	51	46	7	14
40	1 1/2	21	16	28	48	51	50	8	16
50	2	22	18	32	60	64	65	9	18
65	2 1/2	27	19	36	73	70	75	10	19
80	3	28	21	41	89	70	90	10	21
100	4	32	25	65	114	76	115	13	25

GENERAL NOTE: Dimensions are in millimeters.

NOTE:

(1) *Cautionary Note Regarding Hex Bushings:* Hex head bushings of one-size reduction should not be used in services where they might be subject to harmful loads and forces other than internal pressures.

Copyright ASME International
Provided by IHS under license with ASME
No reproduction or networking permitted without license from IHS

Not for Resale

MANDATORY APPENDIX I
INCH TABLES

This Appendix provides tables of the standard inch dimensions for fittings.

Copyright ASME International
Provided by IHS under license with ASME
No reproduction or networking permitted without license from IHS
Not for Resale

Copyright ASME International
Provided by IHS under license with ASME
No reproduction or networking permitted without license from IHS

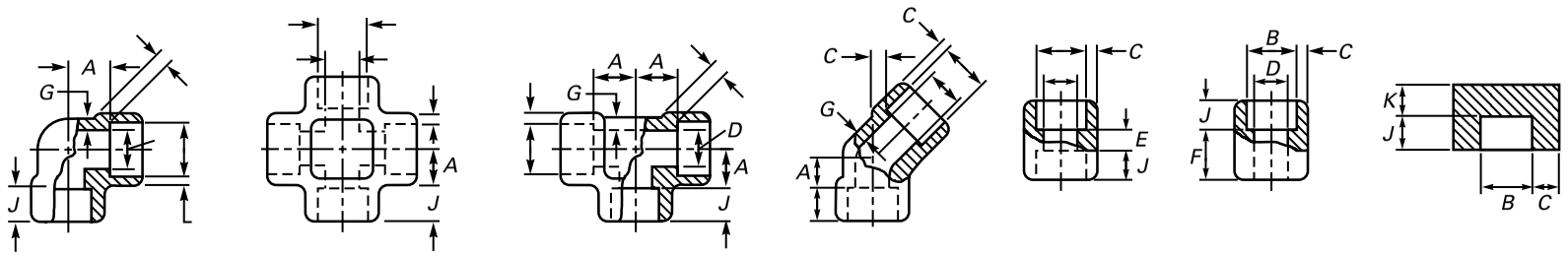

90 deg Elbow | Cross | Tee | 45 deg Elbow | Coupling | Half-Coupling | Cap

TABLE I1 SOCKET-WELDING FITTINGS

Nominal Pipe Size	Socket Bore Diameter, *B* [Note (1)]	Bore Diameter of Fittings, *D* [Note (1)] Class Designation			Socket Wall Thickness, *C* [Note (2)] Class Designation						Body Wall, *G* Class Designation			Min. Depth of Socket, *J*	Center to Bottom of Socket, *A* 90 deg Elbows, Tees, and Crosses Class Designation			Center to Bottom of Socket, *A* 45 deg Elbows Class Designation			Laying Lengths Couplings, *E*	Laying Lengths Half Couplings, *F*	Tolerances, ± *A*	Tolerances, ± *E*	Tolerances, ± *F*	End Wall Thickness, $K_{min.}$ Class Designation		
					3000		6000		9000																			
		3000	6000	9000	Avg.	Min.	Avg.	Min.	Avg.	Min.	Min.	Min.	Min.		3000	6000	9000	3000	6000	9000						3000	6000	9000
1/8	0.440	0.299	0.189	. . .	0.125	0.125	0.156	0.135	. . .	. . .	0.095	0.124	. . .	0.38	0.44	0.44	. . .	0.31	0.31	. . .	0.25	0.62	0.03	0.06	0.03	0.19	0.25	. . .
	0.420	0.239	0.126	. . .																								
1/4	0.575	0.394	0.280	. . .	0.149	0.130	0.181	0.158	. . .	. . .	0.119	0.145	. . .	0.38	0.44	0.53	. . .	0.31	0.31	. . .	0.25	0.62	0.03	0.06	0.03	0.19	0.25	. . .
	0.555	0.334	0.220	. . .																								
3/8	0.710	0.523	0.389	. . .	0.158	0.138	0.198	0.172	. . .	. . .	0.126	0.158	. . .	0.38	0.53	0.62	. . .	0.31	0.44	. . .	0.25	0.69	0.06	0.12	0.06	0.19	0.25	. . .
	0.690	0.463	0.329	. . .																								
1/2	0.875	0.652	0.494	0.282	0.184	0.161	0.235	0.204	0.368	0.322	0.147	0.188	0.294	0.38	0.62	0.75	1.00	0.44	0.50	0.62	0.38	0.88	0.06	0.12	0.06	0.25	0.31	0.44
	0.855	0.592	0.434	0.222																								
3/4	1.085	0.854	0.642	0.464	0.193	0.168	0.274	0.238	0.385	0.337	0.154	0.219	0.308	0.50	0.75	0.88	1.12	0.50	0.56	0.75	0.38	0.94	0.06	0.12	0.06	0.25	0.31	0.50
	1.065	0.794	0.582	0.404																								
1	1.350	1.079	0.845	0.629	0.224	0.196	0.312	0.273	0.448	0.392	0.179	0.250	0.358	0.50	0.88	1.06	1.25	0.56	0.69	0.81	0.50	1.12	0.08	0.16	0.08	0.38	0.44	0.56
	1.330	1.019	0.785	0.569																								
1 1/4	1.695	1.410	1.190	0.926	0.239	0.208	0.312	0.273	0.478	0.418	0.191	0.250	0.382	0.50	1.06	1.25	1.38	0.69	0.81	0.88	0.50	1.19	0.08	0.16	0.08	0.38	0.44	0.56
	1.675	1.350	1.130	0.866																								
1 1/2	1.935	1.640	1.368	1.130	0.250	0.218	0.351	0.307	0.500	0.438	0.200	0.281	0.400	0.50	1.25	1.50	1.50	0.81	1.00	1.00	0.50	1.25	0.08	0.16	0.08	0.44	0.50	0.62
	1.915	1.580	1.308	1.070																								
2	2.426	2.097	1.717	1.533	0.273	0.238	0.430	0.374	0.545	0.477	0.218	0.344	0.436	0.62	1.50	1.62	2.12	1.00	1.12	1.12	0.75	1.62	0.08	0.16	0.08	0.50	0.62	0.75
	2.406	2.037	1.657	1.473																								
2 1/2	2.931	2.529	. . .	. . .	0.345	0.302	. . .	. . .	. . .	. . .	0.276	. . .	. . .	0.62	1.62	. . .	. . .	1.12	. . .	. . .	0.75	1.69	0.10	0.20	0.10	0.62	0.75	. . .
	2.906	2.409	. . .	. . .																								
3	3.560	3.128	. . .	. . .	0.375	0.327	. . .	. . .	. . .	. . .	0.300	. . .	. . .	0.62	2.25	. . .	. . .	1.25	. . .	. . .	0.75	1.75	0.10	0.20	0.10	0.75	0.88	. . .
	3.535	3.008	. . .	. . .																								
4	4.570	4.086	. . .	. . .	0.421	0.368	. . .	. . .	. . .	. . .	0.337	. . .	. . .	0.75	2.62	. . .	. . .	1.62	. . .	. . .	0.75	1.88	0.10	0.20	0.10	0.88	1.12	. . .
	4.545	3.966	. . .	. . .																								

GENERAL NOTE: Dimensions are in inches.

NOTES:
(1) Upper and lower values for each size are the respective maximum and minimum dimensions.
(2) Average of socket wall thickness around periphery shall be no less than listed values. The minimum values are permitted in localized areas.

Not for Resale

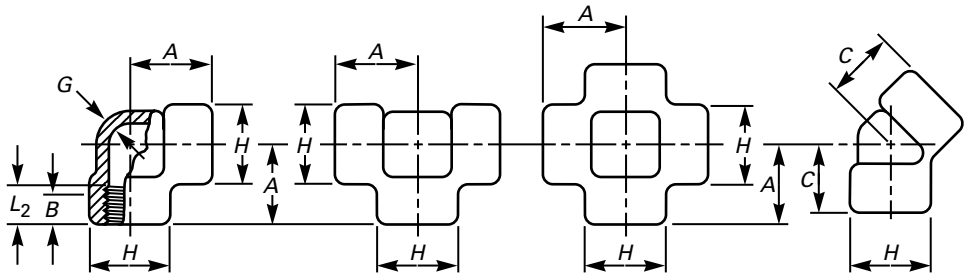

90 deg Elbow Tee Cross 45 deg Elbow

TABLE I2 FORGED THREADED FITTINGS

Nominal Pipe Size	Center-to-End Elbows, Tees, Crosses, *A*			Center-to-End 45 deg Elbow, *C*			Outside Diameter of Band, *H*			Min. Wall Thickness, *G*			Min. Length of Thread [Note (1)]	
	2000	3000	6000	2000	3000	6000	2000	3000	6000	2000	3000	6000	*B*	L_2
1/8	0.81	0.81	0.97	0.69	0.69	0.75	0.88	0.88	1.00	0.125	0.125	0.250	0.25	0.2639
1/4	0.81	0.97	1.12	0.69	0.75	0.88	0.88	1.00	1.31	0.125	0.130	0.260	0.32	0.4018
3/8	0.97	1.12	1.31	0.75	0.88	1.00	1.00	1.31	1.50	0.125	0.138	0.275	0.36	0.4078
1/2	1.12	1.31	1.50	0.88	1.00	1.12	1.31	1.50	1.81	0.125	0.161	0.321	0.43	0.5337
3/4	1.31	1.50	1.75	1.00	1.12	1.31	1.50	1.81	2.19	0.125	0.170	0.336	0.50	0.5457
1	1.50	1.75	2.00	1.12	1.31	1.38	1.81	2.19	2.44	0.145	0.196	0.391	0.58	0.6828
1 1/4	1.75	2.00	2.38	1.31	1.38	1.69	2.19	2.44	2.97	0.153	0.208	0.417	0.67	0.7068
1 1/2	2.00	2.38	2.50	1.38	1.69	1.72	2.44	2.97	3.31	0.158	0.219	0.436	0.70	0.7235
2	2.38	2.50	3.25	1.69	1.72	2.06	2.97	3.31	4.00	0.168	0.281	0.476	0.75	0.7565
2 1/2	3.00	3.25	3.75	2.06	2.06	2.50	3.62	4.00	4.75	0.221	0.301	0.602	0.93	1.138
3	3.38	3.75	4.19	2.50	2.50	3.12	4.31	4.75	5.75	0.236	0.348	0.655	1.02	1.200
4	4.19	4.50	4.50	3.12	3.12	3.12	5.75	6.00	6.00	0.258	0.440	0.735	1.09	1.300

GENERAL NOTE: Dimensions are in inches.

NOTE:

(1) Dimension *B* is minimum length of perfect thread. The length of useful thread (*B* plus threads with fully formed roots and flat crests) shall not be less than L_2 (effective length of external thread) required by American National Standard for Pipe Threads (ASME B1.20.1). See section 6.3.

--`,,`-`-`,,`,,`,`,,`---

Copyright ASME International
Provided by IHS under license with ASME
No reproduction or networking permitted without license from IHS Not for Resale

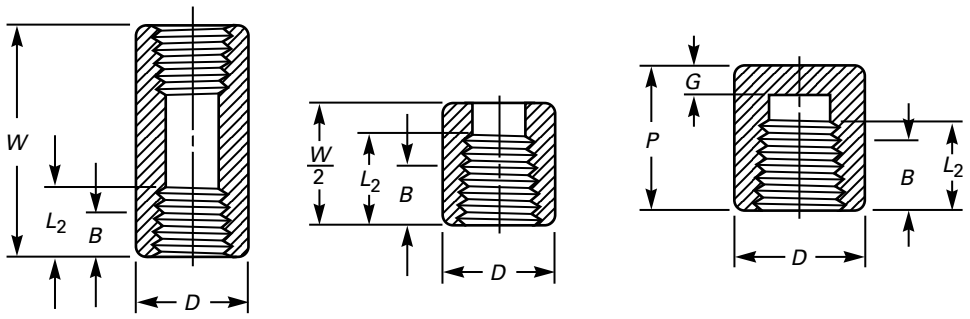

Coupling Half-Coupling Cap

TABLE I3 THREADED FITTINGS

Nominal Pipe Size	End-to-End Couplings, *W*	End-to-End Caps, *P*		Outside Diameter, *D*		Min. End Wall Thickness, *G*		Min. Length of Thread, [Note (1)]	
	3000 and 6000	3000	6000	3000	6000	3000	6000	*B*	L_2
1/8	1.25	0.75	. . .	0.62	0.88	0.19	. . .	0.25	0.2639
1/4	1.38	1.00	1.06	0.75	1.00	0.19	0.25	0.32	0.4018
3/8	1.50	1.00	1.06	0.88	1.25	0.19	0.25	0.36	0.4078
1/2	1.88	1.25	1.31	1.12	1.50	0.25	0.31	0.43	0.5337
3/4	2.00	1.44	1.50	1.38	1.75	0.25	0.31	0.50	0.5457
1	2.38	1.62	1.69	1.75	2.25	0.38	0.44	0.58	0.6828
1 1/4	2.62	1.75	1.81	2.25	2.50	0.38	0.44	0.67	0.7068
1 1/2	3.12	1.75	1.88	2.50	3.00	0.44	0.50	0.70	0.7235
2	3.38	1.88	2.00	3.00	3.62	0.50	0.62	0.75	0.7565
2 1/2	3.62	2.38	2.50	3.62	4.25	0.62	0.75	0.93	1.138
3	4.25	2.56	2.69	4.25	5.00	0.75	0.88	1.02	1.200
4	4.75	2.69	2.94	5.50	6.25	0.88	1.12	1.09	1.300

GENERAL NOTES:
(a) Dimensions are in inches.
(b) Class 2000 and DN6 Class 6000 couplings, half couplings, and caps are not included in this Standard.

NOTE:
(1) Dimension *B* is minimum length of perfect thread. The length of useful thread (*B* plus threads with fully formed roots and flat crests) shall no be less than L_2 (effective length of external thread) required by American National Standard for Pipe Threads (ASME B1.20.1). See section 6.3.

Copyright ASME International
Provided by IHS under license with ASME
No reproduction or networking permitted without license from IHS Not for Resale

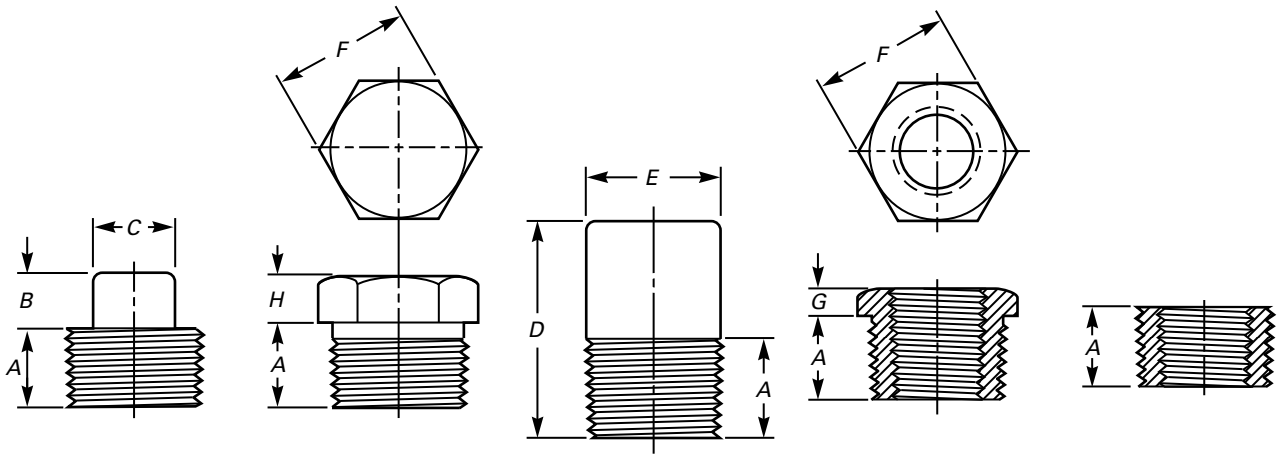

Square Head Plug | **Hex Head Plug** | **Round Head Plug** | **Hex Head Bushing [Note (1)]** | **Flush Bushing**

TABLE I4 PLUGS AND BUSHINGS

		Square Head Plugs		Round Head Plugs		Hex Plugs and Bushings		
							Hex Height	
Nominal Pipe Size	Min. Length, *A*	Min. Square Height, *B*	Min. Width Flats, *C*	Nominal Head Diameter, *E*	Min. Length. *D*	Nominal Width Flats, *F*	Min. Bushing, *G*	Plug, *H*
1/8	0.38	0.25	0.28	0.41	1.38	0.44	. . .	0.25
1/4	0.44	0.25	0.38	0.53	1.62	0.62	0.12	0.25
3/8	0.50	0.31	0.44	0.69	1.62	0.69	0.16	0.31
1/2	0.56	0.38	0.56	0.84	1.75	0.88	0.19	0.31
3/4	0.62	0.44	0.62	1.06	1.75	1.06	0.22	0.38
1	0.75	0.50	0.81	1.31	2.00	1.38	0.25	0.38
1 1/4	0.81	0.56	0.94	1.69	2.00	1.75	0.28	0.56
1 1/2	0.81	0.62	1.12	1.91	2.00	2.00	0.31	0.62
2	0.88	0.69	1.31	2.38	2.50	2.50	0.34	0.69
2 1/2	1.06	0.75	1.50	2.88	2.75	3.00	0.38	0.75
3	1.12	0.81	1.69	3.50	2.75	3.50	0.41	0.81
4	1.25	1.00	2.50	4.50	3.00	4.62	0.50	1.00

GENERAL NOTE: Dimensions are in inches.

NOTE:

(1) *Cautionary Note Regarding Hex Bushings:* Hex head bushings of one-size reduction should not be used in services where they might be subject to harmful loads and forces other than internal pressures.

Copyright ASME International
Provided by IHS under license with ASME
No reproduction or networking permitted without license from IHS
Not for Resale

MANDATORY APPENDIX II
REFERENCES

The following is a list of standards and specifications referenced in this Standard showing the year of approval.

ASME B1.20.1-1983 (R1992) Pipe Threads, General Purpose (Inch)

ASME B16.34-1996 Valves — Flanged, Threaded, and Welding End

ASME B36.10M-1996 Welded and Seamless Wrought Steel Pipe

Publisher: American Society of Mechanical Engineers (ASME), Three Park Avenue, New York, NY 10016; Order Department: 22 Law Drive, Box 2300, Fairfield, NJ 07007

ASTM A 105/A 105M-98 Specification for Forgings, Carbon Steel, for Piping Components

ASTM A 182/A 182M-98 Specification for Forged or Rolled Alloy-Steel Pipe Flanges, Forged Fittings, and Valves and Parts for High-Temperature Service

ASTM A 234/A 234M-97 Specification for Pipe Fittings of Wrought Carbon Steel and Alloy Steel for Moderate and Elevated Temperatures

ASTM A 350/A 350M-98 Specification for Forgings, Carbon and Low-Alloy Steel, Requiring Notch Toughness Testing for Piping Components

ASTM A 403/A 403M-98 Specification for Wrought Austenitic Stainless Steel Pipe Fittings

ASTM A 420/A 420M-96A Specification for Piping Fittings of Wrought Carbon Steel and Alloy Steel for Low-Temperature Service

ASTM B 366-98a Specification for Factory-Made Wrought Nickel and Nickel Alloy Welding Fittings

ASTM B 160-93 Specification for Nickel Rod and Bar

ASTM B 164-98 Specification for Nickel-Copper Alloy Rod, Bar and Wire

Publisher: American Society for Testing and Materials (ASTM), 100 Barr Harbor Drive, West Conshohocken, PA 19428

ISO 9000-1:1994 Quality Management and Quality Assurance Standards-Part 1: Guidelines for Selection and Use

ISO 9000-2:1997 Quality Management and Quality Assurance Standards–Part 2: Generic Guidelines for the Application of ISO 9001, ISO 9002, and ISO 9003

ISO 9000-3:1997 Quality Management and Quality Assurance Standards–Part 3: Guidelines for the Application of ISO 9001 to the Development, Supply, and Maintenance of Software

ISO 9001:1994 Quality Systems — Model for Quality Assurance in Design, Development, Production, Installation, and Servicing

ISO 9002:1994 Quality Systems — Model for Quality Assurance in Production and Servicing

ISO 9003:1994 Quality Systems — Model for Quality Assurance in Final Inspection and Test

Publisher: International Organization for Standardization (ISO), 1 rue de Varembé, Case Postale 56, CH-1211, Genève 20, Switzerland, Suisse

Publications appearing above that have been approved as American National Standards may also be obtained from the American National Standards Institute (ANSI), 11 West 42nd Street, New York, NY 10036.

Copyright ASME International
Provided by IHS under license with ASME
No reproduction or networking permitted without license from IHS
Not for Resale

NONMANDATORY APPENDIX A
QUALITY SYSTEM PROGRAM

The products manufactured in accordance with this Standard shall be produced under a quality system program following the principles of an appropriate standard from the ISO 9000 series.[1] A determination of the need for registration and/or certification of the prodcut manufacturer's quality system program by an independent oganization shall be the responsiblilty of the manufacturer. The detailed documentation demonstrating program compliance shall be available to the purchaser at the manufacturer's facility. A written summary description of the program utilized by the prouct manufacturer shall be available to the purchaser upon request. The product manufacturer is defined as the entity whose name or trademark appears on the product in accordance with the marking or identification requirements of this Standard.

---

[1] The series is also available from the American National Standards Institute (ANSI) and the American Society for Quality Control (ASQC) as American National Standards that are identified by a prefix "Q" replacing the prefix "ISO". Each standad of the series is listed under references.

--`-`-`-,,`,,`,`,,`---

Copyright ASME International
Provided by IHS under license with ASME
No reproduction or networking permitted without license from IHS

Not for Resale

AMERICAN NATIONAL STANDARDS FOR PIPING, PIPE FLANGES, FITTINGS, AND VALVES

Scheme for the Identification of Piping Systems A13.1-1996
Pipe Threads, General Purpose (Inch) ..... B1.20.1-1983(R1992)
Dryseal Pipe Threads (Inch) ..... B1.20.3-1976(R1998)
Cast Iron Pipe Flanges and Flanged Fittings: Classes 25, 125, and 250 ..... B16.1-1998
Malleable Iron Threaded Fittings: Classes 150 and 300 ..... B16.3-1998
Gray Iron Threaded Fittings: Classes 125 and 250 ..... B16.4-1998
Pipe Flanges and Flanged Fittings (NPS ½ Through NPS 24) B16.5-1996
Factory-Made Wrought Buttwelding Fittings B16.9-2001
Face-to-Face and End-to-End Dimensions of Valves B16.10-2000
Forged Fittings, Socket-Welding and Threaded B16.11-2001
Cast Iron Threaded Drainage Fittings B16.12-1998
Ferrous Pipe Plugs, Bushings, and Locknuts with Pipe Threads B16.14-1991
Cast Bronze Threaded Fittings: Classes 125 and 250 ..... B16.15-1985(R1994)
Cast Copper Alloy Solder Joint Pressure Fittings ..... B16.18-1984(R1994)
Metallic Gaskets for Pipe Flanges: Ring-Joint, Spiral-Wound, and Jacketed B16.20-1998
Nonmetallic Flat Gaskets for Pipe Flanges B16.21-1992
Wrought Copper and Copper Alloy Solder Joint Pressure Fittings B16.22-1995
Cast Copper Alloy Solder Joint Drainage Fittings — DWV B16.23-1992
Cast Copper Alloy Pipe Flanges and Flanged Fittings: Class 150, 300, 400, 600, 900, 1500, and 2500 ..... B16.24-1991(R1998)
Buttwelding Ends B16.25-1997
Cast Copper Alloy Fittings for Flared Copper Tubes B16.26-1988
Wrought Steel Buttwelding Short Radius Elbows and Returns B16.28-1994
Wrought Copper and Wrought Copper Alloy Solder Joint Drainage Fittings — DWV B16.29-1994
Manually Operated Metallic Gas Valves for Use in Gas Piping Systems up to 125 psig (Sizes ½ Through 2) B16.33-1990
Valves — Flanged, Threaded, and Welding End B16.34-1996
Orifice Flanges B16.36-1996
Large Metallic Valves for Gas Distribution (Manually Operated, NPS 2½ to 12, 125 psig Maximum) ..... B16.38-1985(R1994)
Malleable Iron Threaded Pipe Unions B16.39-1998
Manually Operated Thermoplastic Gas Shutoffs and Valves in Gas Distribution Systems ..... B16.40-1985(R1994)
Functional Qualification Requirements for Power Operated Active Valve Assemblies for Nuclear Power Plants ..... B16.41-1983(R1989)
Ductile Iron Pipe Flanges and Flanged Fittings, Classes 150 and 300 ..... B16.42-1998
Manually Operated Metallic Gas Valves for Use in House Piping Systems B16.44-1995
Cast Iron Fittings for Sovent® Drainage Systems B16.45-1998
Large Diameter Steel Flanges (NPS 26 Through NPS 60) B16.47-1996
Steel Line Blanks B16.48-1997
Factory-Made Wrought Steel Buttwelding Induction Bends for Transportation and Distribution Systems B16.49-2000
Power Piping B31.1-1998
Fuel Gas Piping (not an ANSI standard) B31.2-1968
Process Piping B31.3-1999
Pipeline Transportation Systems for Liquid Hydrocarbons and Other Liquids B31.4-1998
Refrigeration Piping and Heat Exchanger Components B31.5-2000
Gas Transmission and Distribution Piping Systems B31.8-1999
Building Services Piping B31.9-1996
Slurry Transportation Piping Systems ..... B31.11-1989(R1998)
Manual for Determining the Remaining Strength of Corroded Pipelines B31G-1991
Welded and Seamless Wrought Steel Pipe B36.10M-1996

Copyright ASME International
Provided by IHS under license with ASME
No reproduction or networking permitted without license from IHS
Not for Resale

Stainless Steel Pipe . . . . . B36.19M-1985(R1994)
Self-Operated and Power-Operated Safety-Related Valves Functional Specification Standard . . . . . N278.1-1975(R1992)

The ASME Publications Catalog shows a complete list of all the Standards published by the Society. For a complimentary catalog, or the latest information about our publications, call 1-800-THE-ASME (1-800-843-2763).

Copyright ASME International
Provided by IHS under license with ASME
No reproduction or networking permitted without license from IHS
Not for Resale

ASME Services

ASME is committed to developing and delivering technical information. At ASME's Information Central, we make every effort to answer your questions and expedite your orders. Our representatives are ready to assist you in the following areas:

ASME Press
Codes & Standards
Credit Card Orders
IMechE Publications
Meetings & Conferences
Member Dues Status
Member Services & Benefits
Other ASME Programs
Payment Inquiries
Professional Development
Short Courses
Publications
Public Information
Self-Study Courses
Shipping Information
Subscriptions/Journals/Magazines
Symposia Volumes
Technical Papers

How can you reach us? It's easier than ever!

There are four options for making inquiries* or placing orders. Simply mail, phone, fax, or E-mail us and an Information Central representative will handle your request.

Mail
ASME
22 Law Drive, Box 2900
Fairfield, New Jersey
07007-2900

Call Toll Free
US & Canada: 800-THE-ASME
(800-843-2763)
Mexico: 95-800-THE-ASME
(95-800-843-2763)
Universal: 973-882-1167

Fax—24 hours
973-882-1717
973-882-5155

E-Mail—24 hours
Infocentral@asme.org

* Information Central staff are not permitted to answer inquiries about the technical content of this code or standard. Information as to whether or not technical inquiries are issued to this code or standard is shown on the copyright page. All technical inquiries must be submitted in writing to the staff secretary. Additional procedures for inquiries may be listed within.

--`,`-`-`,,`,,`,`,,`---

Copyright ASME International
Provided by IHS under license with ASME
No reproduction or networking permitted without license from IHS
Not for Resale


ISBN 0-7918-2746-1

9 780791 827468

M01601

Copyright ASME International
Provided by IHS under license with ASME
No reproduction or networking permitted without license from IHS

Not for Resale