ASME B16.1-2005
(Revision of ASME B16.1-1998)

Gray Iron Pipe Flanges and Flanged Fittings

(Classes 25, 125, and 250)

AN AMERICAN NATIONAL STANDARD

The American Society of Mechanical Engineers

Copyright ASME International
Provided by IHS under license with ASME
No reproduction or networking permitted without license from IHS

Not for Resale

ASME B16.1-2005
(Revision of ASME B16.1-1998)

Gray Iron Pipe Flanges and Flanged Fittings

(Classes 25, 125, and 250)

AN AMERICAN NATIONAL STANDARD

The American Society of Mechanical Engineers
Three Park Avenue • New York, NY 10016

Copyright ASME International
Provided by IHS under license with ASME
No reproduction or networking permitted without license from IHS
Not for Resale

Date of Issuance: August 31, 2006

The next edition of this Standard is scheduled for publication in 2010. There will be no addenda or written interpretations of the requirements of this Standard issued to this edition.

ASME is the registered trademark of The American Society of Mechanical Engineers.

This code or standard was developed under procedures accredited as meeting the criteria for American National Standards. The Standards Committee that approved the code or standard was balanced to assure that individuals from competent and concerned interests have had an opportunity to participate. The proposed code or standard was made available for public review and comment that provides an opportunity for additional public input from industry, academia, regulatory agencies, and the public-at-large.

ASME does not "approve," "rate," or "endorse" any item, construction, proprietary device, or activity.

ASME does not take any position with respect to the validity of any patent rights asserted in connection with any items mentioned in this document, and does not undertake to insure anyone utilizing a standard against liability for infringement of any applicable letters patent, nor assumes any such liability. Users of a code or standard are expressly advised that determination of the validity of any such patent rights, and the risk of infringement of such rights, is entirely their own responsibility.

Participation by federal agency representative(s) or person(s) affiliated with industry is not to be interpreted as government or industry endorsement of this code or standard.

ASME accepts responsibility for only those interpretations of this document issued in accordance with the established ASME procedures and policies, which precludes the issuance of interpretations by individuals.

No part of this document may be reproduced in any form,
in an electronic retrieval system or otherwise,
without the prior written permission of the publisher.

The American Society of Mechanical Engineers
Three Park Avenue, New York, NY 10016-5990

Copyright © 2006 by
THE AMERICAN SOCIETY OF MECHANICAL ENGINEERS
All rights reserved
Printed in U.S.A.

Copyright ASME International
Provided by IHS under license with ASME
No reproduction or networking permitted without license from IHS

Not for Resale

CONTENTS

Foreword v
Committee Roster vii
Correspondence With the B16 Committee viii

1 Scope 1
2 Pressure–Temperature Ratings 1
3 Size 2
4 Marking 2
5 Materials 2
6 Fitting Dimensions and Tolerances 2
7 Bolt, Nut, and Gasket Dimensions 4
8 Hydrostatic Tests 4
9 Certifications 4

Figures
1 Method of Designating Outlets of Reducing Fittings in Specifications 6
2 Class 25 Flanges 7
3 Class 25 Flanged Fittings 8
4 Class 125 Flanges 10
5 Class 125 Flanged Fittings 12
6 Class 250 Flanges 17
7 Class 250 Flanged Fittings 19
8 Class 125 Tees (Anchorage Bases) 24
9 Class 250 Tees (Anchorage Bases) 26
10 Drain Connections 28
11 Method of Designating Location of Tapped Holes for Drains When Specified 29

Tables
1 Pressure–Temperature Ratings 5
2 Class 25 Flange and Bolting Dimensions 7
3 Dimensions of Class 25 Gray Iron Flanged Fittings 9
4 Class 125 Flange and Bolting Dimensions 11
5 Dimensions of Class 125 Gray Iron Flanged Fittings 14
6 Class 250 Flange and Bolting Dimensions 18
7 Dimensions of Class 250 Gray Iron Flanged Fittings 21
8 Dimensions of Anchorage Bases for Straight and Reducing Class 125 Tees 25
9 Dimensions of Anchorage Bases for Straight and Reducing Class 250 Tees 27
10 Minimum Thread Length 28

Copyright ASME International
Provided by IHS under license with ASME
No reproduction or networking permitted without license from IHS
Not for Resale

Mandatory Appendices
I Dimensions of Fittings in U.S. Customary Units 31
II References 57

Nonmandatory Appendix
A Quality System Program 58

Copyright ASME International
Provided by IHS under license with ASME
No reproduction or networking permitted without license from IHS
Not for Resale

FOREWORD

In 1894, the American Society of Mechanical Engineers (ASME) adopted a standard flange template ("ASME Standard") for low-pressure service. A "Manufacturers Standard" for pressures up to 250 psi followed in 1901. Around 1910, a group of fittings manufacturers formed an organization that was the forerunner of the present Manufacturers Standardization Society of the Valve and Fittings Industry (MSS) and undertook the design of a line of flanged fittings. A document covering this work was published in 1912.

During the years 1912–1914, a Joint Committee of the ASME and the Manufacturers Committee formulated compromise standard dimensions for pipe flanges and flanged fittings for use under saturated steam pressures of 125 psi and 250 psi pressure ranges. The Joint Committee's report was accepted at a conference attended by representatives of ASME, the Manufacturers Committee, the U.S. government, and the National Association of Master Steam and Hot Water Fitters. ASME published this report as the "American Standard for Pipe Flanges, Fittings and Their Bolting" in 1914. In 1918, work was started on standards for 50 lb steam flanges and for 800 lb, 1,200 lb, and 3,000 lb hydraulic flanges, which were subsequently approved by this group.

In 1921, the American Engineering Standards Committee, later known as the American Standards Association (ASA), United States of America Standards Institute (USAS), and more recently, the American National Standards Institute (ANSI), organized Sectional Committee B16 to unify and further develop national standards for pipe flanges and fittings (and later for valves and gaskets). Cosponsors of the B16 Committee were ASME, MSS, and the Heating and Piping Contractors Association [now the Mechanical Contractors Association of America (MCAA)]. Work already in progress on flanges and flanged fittings was assigned to Subcommittee 1 (now Subcommittee A). Following approval by the Subcommittee, the B16 Committee, the cosponsors, and ASA, the standards were published in 1928.

In later work, Subcommittee 1 developed the 25 lb Flange and Flanged Fitting Standard (approved in 1931 as ASA B16b2), which replaced the 50 lb standard that had been originally approved in 1918. Work on the 800 lb Hydraulic Flange Standard was published as ASA B16b1 in 1931. Revision of thicknesses, tolerances, and service pressure ratings of the 125 lb and 250 lb flanges and flanged fittings led to approval and publication of ASA B16a-1939.

An American war standard entitled "Pressure Ratings for Cast Iron Flanges and Flanged Fittings, 125 lb" (ASA B16a1) was published in 1943. A complete review of the 125 lb and 250 lb standards resulted in new editions of each: ASA B16.1-1948 and ASA B16.2-1948. In 1960, editions of B16.1 and B16.2 were issued in which ratings were presented in graphic form and special requirements were added for testing flanges.

A review of all gray iron flange and flanged fittings standards initiated in 1962 resulted in the withdrawal of B16.16, "300 lb Refrigerant Flanges and Flanged Fittings" and the combining of the remaining standard into a single document, with B16.1 and B16.2 coming together as USAS B16.1-1967. In this edition, the presentation of ratings was restored to tabular form.

The increasing use of higher grades of gray iron necessitated the establishment of a second set of ratings for the smaller sizes. A revised edition published as ANSI B16.1-1975 incorporated these new ratings along with metric (SI) equivalents for dimensions and minor corrections to the 1967 edition text.

In 1982, American National Standards Committee B16 was recognized as an ASME Committee operating under procedures accredited by ANSI. Following approval by the ASME B16 Subcommittee A and B16 Committee, ANSI approved ASME/ANSI B16.1-1989 on March 8, 1989. Changes included revised marking requirements, revised bolt length increments ($\frac{1}{2}$ in. rather than $\frac{1}{4}$ in.), elimination of metric equivalents, a correction of the Class 800 flange raised-face height to 0.25 in. from the 0.06 in. shown previously, and editorial changes to the text.

In the 1998 edition of ASME B16.1, Reference Standards have been updated, a Quality System Program Annex has been added, Class 800 has been deleted, and several editorial revisions have

Copyright ASME International
Provided by IHS under license with ASME
No reproduction or networking permitted without license from IHS
Not for Resale

been made. Following approval by ASME B16 Subcommittee B and B16 Main Committee, ANSI approved this American National Standard on November 20, 1998.

Work was started in 1999 to revise the standard to include metric units as the primary reference units while maintaining U.S. Customary units in either parenthetical or separate forms. The goal is to delete the U.S. Customary units when the standard is next issued. Following approval of the Standard Committee and ASME, approval as an American National Standard was given by ANSI on July 8, 2005, with the new designation ASME B16.1-2005.

All requests for interpretation or suggestions for revision should be sent to the Administrative Secretary B16. The American Society of Mechanical Engineers, Three Park Avenue, New York, NY 10016-5990.

Copyright ASME International
Provided by IHS under license with ASME
No reproduction or networking permitted without license from IHS
Not for Resale

ASME B16 COMMITTEE
Standardization of Valves, Flanges, Fittings, Gaskets, and Valve Actuators

(The following is the roster of the Committee at the time of approval of this Standard.)

STANDARDS COMMITTEE OFFICERS

H. R. Sonderegger, *Chair*
M. L. Nayyar, *Vice Chair*
U. D'Urso, *Secretary*

STANDARDS COMMITTEE PERSONNEL

R. W. Barnes, Anric Enterprises, Inc.
W. B. Bedesem, Exxonmobil Research and Engineering Co.
D. F. Buccicone, Elkhart Products Corp.
M. A. Clark, Nibco, Inc.
U. D'Urso, The American Society of Mechanical Engineers
C. E. Floren, Mueller Co.
D. R. Frikken, Becht Engineering Co.
G. G. Grills, U.S. Coast Guard
M. L. Henderson, Forgital USA
G. A. Jolly, Vogt Valves/Flowserve Corp.
M. Katcher, Haynes International
W. N. McLean, Newco Valves
T. A. McMahon, Fisher Controls International, Inc.
M. L. Nayyar, Bechtel Power Corp.
J. D. Page, U.S. Nuclear Regulatory Commission
W. H. Patrick, The Dow Chemical Co.
R. A. Schmidt, Trinity-Ladish Co.
H. R. Sonderegger, Anvil International, Inc.
W. M. Stephan, Flexitallic LP
T. F. Stroud, Ductile Iron Pipe Research Association
D. A. Williams, Southern Company Services

SUBCOMMITTEE B — THREADED FITTINGS (EXCEPT STEEL), FLANGES

H. R. Sonderegger, *Chair,* Anvil International, Inc.
S. Vasquez, *Secretary,* The American Society of Mechanical Engineers
K. Barron, Ward Manufacturing
M. A. Clark, Nibco, Inc.
A. A. Knapp, A. Knapp and Associates
R. L. Larkin, American Flow Control
P. I. McGrath, Jr., Consultant
W. N. McLean, Newco Valves
J. K. Schultz, Conine Manufacturing Co., Inc.

Copyright ASME International
Provided by IHS under license with ASME
No reproduction or networking permitted without license from IHS
Not for Resale

CORRESPONDENCE WITH THE B16 COMMITTEE

General. ASME Standards are developed and maintained with the intent to represent the consensus of concerned interests. As such, users of this Standard may interact with the Committee by requesting interpretations, proposing revisions, and attending Committee meetings. Correspondence should be addressed to:

Secretary, B16 Standards Committee
The American Society of Mechanical Engineers
Three Park Avenue
New York, NY 10016-5990

Proposing Revisions. Revisions are made periodically to the Standard to incorporate changes that appear necessary or desirable, as demonstrated by the experience gained from the application of the Standard. Approved revisions will be published periodically.

The Committee welcomes proposals for revisions to this Standard. Such proposals should be as specific as possible, citing the paragraph number(s), the proposed wording, and a detailed description of the reasons for the proposal, including any pertinent documentation.

Interpretations. Upon request, the B16 Committee will render an interpretation of any requirement of the Standard. Interpretations can only be rendered in response to a written request sent to the Secretary of the B16 Standards Committee.

The request for interpretation should be clear and unambiguous. It is further recommended that the inquirer submit his/her request in the following format:

Subject:	Cite the applicable paragraph number(s) and the topic of the inquiry.
Edition:	Cite the applicable edition of the Standard for which the interpretation is being requested.
Question:	Phrase the question as a request for an interpretation of a specific requirement suitable for general understanding and use, not as a request for an approval of a proprietary design or situation. The inquirer may also include any plans or drawings, which are necessary to explain the question; however, they should not contain proprietary names or information.

Requests that are not in this format will be rewritten in this format by the Committee prior to being answered, which may inadvertently change the intent of the original request.

ASME procedures provide for reconsideration of any interpretation when or if additional information that might affect an interpretation is available. Further, persons aggrieved by an interpretation may appeal to the cognizant ASME Committee or Subcommittee. ASME does not "approve," "certify," "rate," or "endorse" any item, construction, proprietary device, or activity.

Attending Committee Meetings. The B16 Standards Committee regularly holds meetings, which are open to the public. Persons wishing to attend any meeting should contact the Secretary of the B16 Standards Committee.

Copyright ASME International
Provided by IHS under license with ASME
No reproduction or networking permitted without license from IHS
Not for Resale

GRAY IRON PIPE FLANGES AND FLANGED FITTINGS
Classes 25, 125, and 250

1 SCOPE

1.1 General

This Standard covers Classes 25, 125, and 250 Gray Iron Pipe Flanges and Flanged Fittings. It includes:

(a) pressure-temperature ratings;

(b) sizes and method of designating openings of reducing fittings;

(c) marking;

(d) materials;

(e) dimensions and tolerances;

(f) bolting and gaskets;

(g) pressure testing.

1.2 References

Standards and specifications adopted by reference in this Standard are shown in Appendix II, which is part of this Standard. It is not considered practical to identify the specific edition of each referenced standard and specification in the text, when referenced. Instead, the specific editions of the referenced standards and specifications are listed in Appendix II.

1.3 Quality Systems

Requirements relating to the product manufacturer's Quality System Programs are described in Appendix A.

1.4 Relevant Units

This Standard states values in both SI and U.S. Customary units. As an exception, diameter of bolts and flange bolt holes are expressed in inch units only. These systems of units are to be regarded separately. Within the text, the U.S. Customary units are shown in parenthesis or in separate tables. The values stated in each table are not exact equivalents; therefore it is required that each system of units be used independently of the other. Except for diameter of bolts and flange bolt holes, combining values from the two systems constitutes nonconformance with the standard.

1.5 Service Conditions

Criteria for selection of materials suitable for particular fluid service are not within the scope of this Standard.

1.6 Convention

For the purpose of determining conformance with this Standard, the convention for fixing significant digits where limits, maximum and minimum values are specified, shall be rounded as defined in ASTM E 29. This requires that an observed or calculated value shall be rounded off to the nearest unit in the last right hand digit used for expressing the limit. Decimal values and tolerance do not imply a particular method of measurement.

1.7 Denotation

1.7.1 Pressure Rating Designation. Class, followed by a dimensionless number, is the designation for pressure-temperature ratings as follows:

Class	25	125	250

1.7.2 Size. NPS, followed by a dimensionless number, is the designation for nominal flange or flange fitting size. NPS is related to the reference nominal diameter, DN, used in international standards. The relationship is, typically, as follows:

NPS	DN
1	25
1¼	32
1½	40
2	50
2½	65
3	80
3½	...
4	100

For NPS ≥ 4, the related DN is: DN = 25 × (NPS)

2 PRESSURE–TEMPERATURE RATINGS

2.1 General

Pressure–temperature ratings are maximum allowable working pressures in bar units at the temperature in degrees Celsius shown in Table 1 for the applicable material and class designation. Table I-1 of Appendix I lists pressure–temperature ratings using psi units for pressure at the temperature in degrees Fahrenheit. For intermediate temperatures, linear interpolation is permitted. Interpolation between class designations is not permitted.

2.2 Flanged Joints

A flanged joint is composed of independent interrelated components; the flanges, the gasket, and the bolting, that are assembled manually. Proper controls must be exercised in the selection and application for these

Copyright ASME International
Provided by IHS under license with ASME
No reproduction or networking permitted without license from IHS
Not for Resale

elements to attain a joint that has acceptable leak tightness. Special techniques, such as controlled bolt tightening described in ASME PCC-1, may be used to achieve a tight joint in service.

2.3 Rating Temperature

Temperatures shown for the corresponding pressure rating shall be the material temperature of the pressure-retaining structure. It may be assumed that the material temperature is the same as the fluid temperature. Use of a pressure rating at a material temperature other than that of the contained fluid is the responsibility of the user and subject to the requirements of any applicable code or regulation.

2.4 Low-Temperature Ratings

Pressure ratings for temperatures below −29°C (−20°F) should be determined in accordance with low-temperature properties of gray iron (ASTM A 126) as governed by applicable code or regulation.

2.5 Ductility

Gray Iron has little ductility, therefore, the resistance of these flanges and flanged fittings to excessive forces and suddenly applied loads is significantly less than for more ductile materials such as steel. The following precautions are recommended:

(a) These flanges and flanged fittings should not be used where suddenly applied loads such as rapid pressure fluctuation may occur.

(b) Alignment of flange faces is essential along with control of assembly bolt torque so as not to over-stress the gray iron flanges. Care should also be exercised to ensure that piping loads transmitted to gray iron flanges are controlled.

3 SIZE

3.1 Nominal Pipe Size

As applied in this Standard, the use of the phrase "nominal pipe size" or the designation NPS followed by a dimensionless number is for the purpose of identifying the end connection of piping, flanges, or flanged fittings. The number is not necessarily the same as the flange or flanged fitting inside diameter.

3.2 Reducing Fittings

Reducing fittings shall be designated by NPS for the openings in the sequence as indicated in the sketches of Fig. 1.

4 MARKING

4.1 Fittings

The manufacturer's name or trademark and numerals as shown below for each pressure rating class designation shall be cast on the exterior surface of all fittings.

Class	NPS	Numeral
25	All	25
125	1 ≤ NPS ≤ 12	125
	14 ≤ NPS ≤ 24	100
	30 ≤ NPS ≤ 48	50
250	1 ≤ NPS < 12	250
	14 ≤ NPS ≤ 24	200
	30 ≤ NPS ≤ 48	100

4.2 Flanges

The manufacturer's name or trademark shall be cast on all loose flanges. In addition, the numeral 25 shall be cast on Class 25 flanges. Numerals for other classes designations shall be cast on loose flanges in addition to the requirements of para. 4.3.

4.3 Material Class

In those sizes and pressure-rating class designations, where ASTM A 126 both Classes A and B iron can be used, see para. 5.1, letter A or B shall be cast on both flanges and fittings in the proximity of the numerals. Flanges and fittings with no A or B Class iron marking shall be considered as Class A iron for rating purposes.

5 MATERIALS

5.1 Castings

Castings shall meet the requirements of ASTM A 126 for both flanges and flanged fittings, as follows:

Class	NPS	Class of Iron ASTM A 126
25	All	A
125	1 ≤ NPS ≤ 12	A or B
	14 ≤ NPS	B
250	1 ≤ NPS ≤ 12	A or B
	14 ≤ NPS	B

5.2 Bolting

ASTM A 307 Grade B bolting material is recommended for gray iron flange assembly. Where gray iron flanges are bolted to steel flanges, see ASME B16.5 for bolting limitations.

6 FITTING DIMENSIONS AND TOLERANCES

6.1 Wall Thickness

It is recognized that some variations are absolutely unavoidable in the making of patterns and castings. Equipment shall be designed to produce wall thicknesses given in the tables. Wall thickness at no point shall be less than 87.5% of the thickness given in the tables.

Copyright ASME International
Provided by IHS under license with ASME
No reproduction or networking permitted without license from IHS
Not for Resale

6.2 Facing

(a) Classes 25 and 125 gray iron flanges and flanged fittings shall be flat faced (i.e., without projection or raised face) and finished in accordance with MSS SP-6.

(b) Class 250 flanges and flanged fittings shall have a 2 mm (0.06 in.) raised face of the diameters given in Table 6 and finished in accordance with MSS SP-6. The raised face is included in the minimum flange thickness and center-to-face dimension.

6.3 Center-to-Face Dimensions

6.3.1 Side Outlet Fittings. Side outlet elbows, side outlet tees, and side outlet crosses shall have all openings on intersecting centerlines. Long-radius elbows with side outlet shall have the side outlet on the radial centerline of the elbow.

6.3.2 Elbows

(a) The center-to-face dimensions for straight-size 90 deg elbows, 90 deg long-radius elbows, 45 deg elbows, side-outlet 90 deg elbows, and double-branch elbows are shown in Tables 3, 5, and 7.

(b) Reducing 90 deg elbows, reducing 90 deg long-radius elbows, reducing side-outlet 90 deg elbows, and reducing double-branch elbows shall have the same center-to-face dimensions as straight-size fittings shown in Tables 3, 5, and 7 corresponding to the size of the largest opening.

(c) For 90 deg long-radius elbows with side outlet, the center-to-face dimensions of the side outlet shall be the same as dimension *A* in Tables 3, 5, and 7 for a straight-size 90 deg elbow corresponding to the size of the largest opening.

(d) Special-degree elbows ranging from 1 deg to 45 deg, inclusive, shall have the same center-to-face dimensions as those for 45 deg elbows; those over 45 deg and up to 90 deg, inclusive, shall have the same center-to-face dimensions as those for 90 deg elbows. The angle designation of an elbow is the angle between the flange faces.

6.3.3 Tees, Crosses, and Laterals

(a) The center-to-face dimensions for straight-size tees and crosses, with or without side outlet, and laterals are shown in Tables 3, 5, and 7.

(b) Reducing tees and reducing crosses, with or without side outlet, and reducing laterals, NPS 16 and smaller, shall have the same center-to-face dimensions as straight-size fittings shown in Tables 3, 5, and 7 corresponding to the size of the largest opening. For NPS 18 and larger, if the outlet of a reducing tee; the branch of a reducing lateral; or the largest outlet of a reducing side outlet tee, reducing cross, and reducing side outlet cross is the same size or smaller than given in Tables 3, 5, and 7 (short body pattern), the center-to-face dimensions shown in these Tables shall be used. If a branch or any outlet is larger than shown in Tables 3, 5, and 7, the center-to-face dimensions shall be the same as for the straight-size fitting shown in Tables 3, 5, and 7 corresponding to the size of the largest opening. Tees, crosses, and laterals, reducing on the run only, shall have the same center-to-face dimensions as straight-size fittings shown in Tables 3, 5, and 7 corresponding to the size of the largest opening.

(c) Tees reducing on both runs are generally known as bull-head tees and have the same center-to-face dimensions as straight-size fittings corresponding to the size of the outlet.

6.3.4 True *Y's*. Center-to-face dimensions for straight-size true *Y's* are shown in Tables 5 and 7. Reducing sizes are considered special and should be made to suit conditions.

6.3.5 Reducers and Eccentric Reducers. The face-to-face dimensions for all reductions of reducers and eccentric reducers shall be the same as given in Tables 5 and 7 for the largest opening.

6.4 Center-to-Face Tolerances

The following tolerances shall be permitted on all center-to-contact surface dimensions of fittings: Tolerances for contact surface-to-contact surface dimensions shall be twice those given below. The largest opening in the fitting governs the tolerance to be applied to all openings.

	Tolerance	
NPS	mm	in.
≤ 10	± 1.0	± 0.03
≥ 12	± 1.5	± 0.06

6.5 Threaded Flanges

6.5.1 General. Flanges shall have a Standard Taper Pipe Thread in accordance with ASME B1.20.1. The thread shall be concentric with the axis of the flange, and variations in alignment shall not exceed 5.00 mm/m (0.06 in./ft).

6.5.2 Class 125. Threads shall be countersunk a distance not less than one-half of the pitch of the thread at an angle approximately 45 deg with the axis of the thread, for the purpose of easy entrance in making the joint and protection of the threads. Countersinking shall be concentric with the threads. The length of the threads shall be measured to include the countersink.

6.5.3 Class 250. Hub may be recessed. When not recessed, threads shall be countersunk a distance not less than one-half of the pitch of the thread at an angle approximately 45 deg with the axis of the thread at the back of the flange. If hub is recessed, threads shall be 45 deg countersunk to diameter of recess. The purpose is for easier entrance in making a joint and for the protection of the threads. Countersinking shall be concentric

Copyright ASME International
Provided by IHS under license with ASME
No reproduction or networking permitted without license from IHS Not for Resale

with the threads. The length of threads shall be measured to include the countersink.

6.6 Flange Bolt Holes

6.6.1 Flange Bolt Holes. Flange bolt holes shall be in accordance with the dimensions shown in Tables 2, 4, and 6. Pairs of bolt holes shall straddle the centerline.

6.6.2 Bolt Circle Diameter. The required tolerance for a bolt circle diameter is ± 1.5 mm (± 0.06 in.).

6.6.3 Bolt Hole to Bolt Hole. The required tolerance for the center-to-center of adjacent bolt hole is ± 0.8 mm (± 0.03 in.).

6.6.4 Bolt Circle Concentricity. The required tolerance for concentricity between the flange bolt circle diameter and machined facing diameters are as follows.

NPS ≤ 2½	0.8 mm (0.03 in.)
NPS ≤ 48	1.5 mm (0.06 in.)

6.6.5 Tolerance. Tolerances for sizes larger than NPS 48 shall be as agreed between the Manufacturer and purchaser.

6.7 Spot Facing

All flanges and flanged fittings covered by this Standard shall have bearing surfaces for bolting that are parallel to the flange face within 3 deg. Any back facing or spot facing required to accomplish parallelism shall not reduce the flange thickness Q below the dimensions given in Tables 2 through 7. Flange thickness at any point within the spot face area, as defined in MSS SP-9, shall not exceed the required minimum thickness by more than the following amounts.

NPS	Excess Thickness, mm (in.)
2 ≤ NPS ≤ 12	3.0 (0.12)
14 ≤ NPS ≤ 24	4.5 (0.18)
30 ≤ NPS ≤ 96	6.5 (0.25)

When required, all spot facing shall be done in accordance with MSS SP-9. Sharp corners shall be avoided in back facing.

6.8 Crosses and Lateral Reinforcement

Crosses and laterals (Y-branches) both straight and reducing shall be reinforced where necessary to compensate for the inherent weakness in the shape of these fittings.

6.9 Drain Connections

6.9.1 Threaded Connections. Holes may be drilled and tapped in the wall of fittings if the metal thickness is sufficient to provide the effective length of thread as shown in Fig. 10 and as specified in Table 10. Where thread length is insufficient due to metal thickness or size of tapping is such that reinforcement of opening is necessary, an integral boss should be added. In no case shall the effective length of thread A be less than that shown in Table 10. These lengths are equal to the effective thread lengths as shown in ASME B1.20.1.

6.9.2 Location Designation. The method of designating the locations of the tapped holes for drains is shown in Fig. 11. Each location is designated by a letter so that desired locations for the various types of fittings may be definitely specified without the use of further sketches or description. For further tapping details, see MSS SP-45.

7 BOLT, NUT, AND GASKET DIMENSIONS

7.1 Bolting

(a) It is recommended that carbon steel bolts smaller than ¾ in. have (ASME B18.2.1) square heads or (ASME B18.2.1) heavy hex heads, and shall have (ASME B18.2.2) heavy hex nuts.

(b) Carbon steel bolts ¾ in. and larger shall have (ASME B18.2.1) square heads or (ASME B18.2.1) hex heads and shall have (ASME B18.2.2) hex nuts or (ASME B18.2.2) heavy hex nuts or (ASME B18.2.2) square nuts. For bolt sizes 1½ in. and larger, stud bolts with a nut on each end are recommended.

(c) All bolts or (stud bolts) and all nuts shall be threaded in accordance with the Unified Screw Threads, standard coarse thread series (ASME B1.1) with Class 2A for bolts and Class 2B for nuts.

7.2 Gaskets

It is recommended that flat ring gaskets be in accordance with dimensions given in ASME B16.21 for nonmetallic gaskets for pipe flanges.

8 HYDROSTATIC TESTS

(a) Pressure testing is not required unless specified by the user.

(b) Fittings. Fittings shall be capable of withstanding, without showing leaks, the hydrostatic test pressures listed in Table 1 for the material and maximum allowable working pressure of the item tested. These test pressures are 1.5 times the cold working pressure rate rounded to the next higher 0.5 bar (12 psi) in Table 1.

(c) Flanges. Flanges integral with or attached to equipment may be hydrostatically tested by the purchaser at his responsibility at pressures higher than specified herein.

9 CERTIFICATIONS

The manufacturer shall be able to certify that products are in conformance with the requirements of this Standard when required by the purchase order.

Copyright ASME International
Provided by IHS under license with ASME
No reproduction or networking permitted without license from IHS
Not for Resale

Table 1 Pressure–Temperature Ratings

Temperature, °C	Class 25 [Note (1)] ASTM A 126 Class A		Class 125 ASTM A 126				Class 250 [Note (2)] ASTM A 126			
			Class A	Class B			Class A	Class B		
	NPS 4–36	NPS 42–96	NPS 1–12	NPS 1–12	NPS 14–24	NPS 30–48	NPS 1–12	NPS 1–12	NPS 14–24	NPS 30–48
−29 to 65	3.1	1.7	12.1	13.8	10.3	10.3	27.6	34.5	20.7	20.7
80	2.9	1.7	11.6	13.3	9.8	9.1	26.5	33.0	20.0	18.9
100	2.6	1.7	11.0	12.7	9.2	7.5	25.0	30.9	19.0	16.4
120	2.1	1.7	10.4	12.1	8.6	5.8	23.5	28.8	18.0	13.9
135	1.7	1.7	...	...	...	...	...	...	...	...
140	...	...	9.8	11.5	8.0	4.2	22.1	26.7	17.0	11.5
149	...	...	...	...	...	3.4	...	...	...	...
160	...	...	9.2	10.8	7.4	...	20.6	24.6	16.1	9.0
178 (3)	...	...	8.6	...	6.9	...	...	...	...	6.9
180	...	...	...	10.2	...	...	19.2	22.5	15.1	...
200	...	...	...	9.6	...	...	17.8	20.5	14.2	...
208 (4)	...	...	...	...	...	...	17.2	...	13.8	...
220	...	...	...	9.0	...	...	...	18.5	...	...
232	...	...	...	8.6	...	...	...	17.2	...	...
Hydrostatic Shell Test Pressures (Bar) [Note (5)]										
38	4.8	2.7	18.3	20.7	15.5	15.5	41.4	51.8	31.0	31.0

GENERAL NOTE: Pressure is in bar.

NOTES:

(1) When Class 25 flange or flange fittings are used for gaseous service, the maximum pressure shall be limited to 1.7 bar.

(2) When Class 250 is used for liquid service, the tabulated pressure shall be used. Class 250: When used for liquid service the tabulated pressure temperature ratings in sizes NPS 14 and larger are applicable to Class 250 flanges only and not to Class 250 fittings.

(3) 178°C to reflect the temperature of saturated steam at 8.6 bar.

(4) 208°C to reflect the temperature of saturated steam at 17.2 bar.

(5) See para. 8.

--`,,```,,,,````-`-`,,`,,`,`,,`---

Copyright ASME International
Provided by IHS under license with ASME
No reproduction or networking permitted without license from IHS Not for Resale

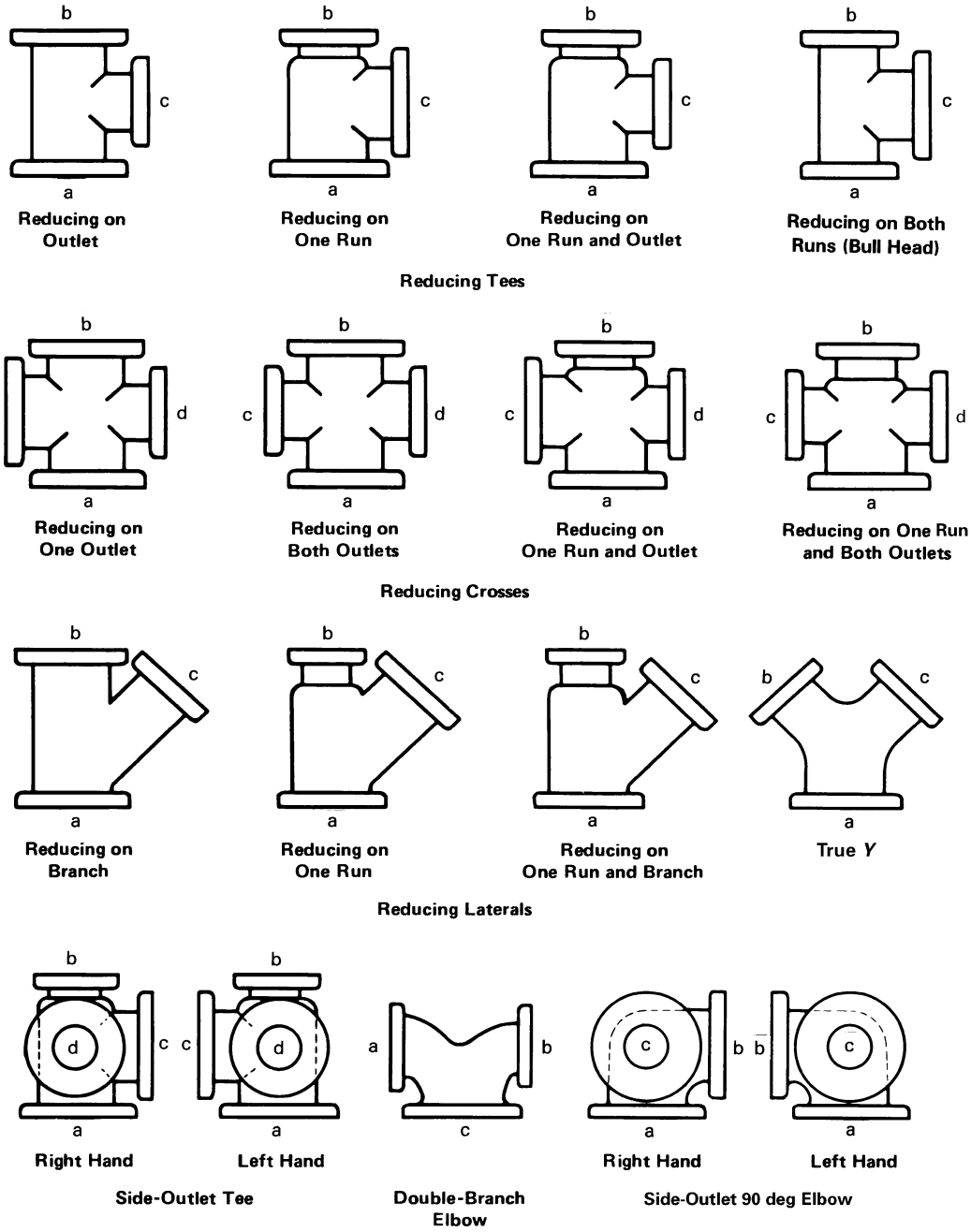

GENERAL NOTES:

(a) The largest opening establishes the basic size of a reducing fitting. The largest opening is named first, except for bull-head tees, which are reducing on both runs, and double-branch elbows where both branches are reducing; the outlet is the largest opening and named last in both cases.

(b) In designating the openings of reducing fittings, they should be read in the order indicated by the sequence of the letters a, b, c, and d. In designating the outlets of side-outlet reducing fittings, the side outlet is named last; and in the case of the cross (which is not shown), the side outlet is designated by the letter e.

Fig. 1 Method of Designating Outlets of Reducing Fittings in Specifications

Copyright ASME International
Provided by IHS under license with ASME
No reproduction or networking permitted without license from IHS
Not for Resale

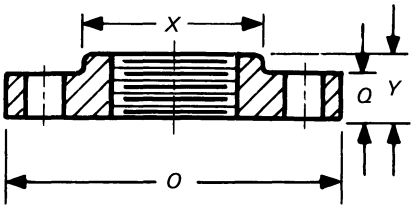

Fig. 2 Class 25 Flanges

Table 2 Class 25 Flange and Bolting Dimensions

	Flanges		Hub		Bolt Holes		Bolting [Note (6)]		
NPS	Diameter, *O*	Thickness, Min., *Q* [Notes (1) and (2)]	Diameter, Min., *X*	Length, Min., *Y*	Diameter of Bolt Circle [Note (3)]	Diameter of Bolt Holes [Notes (3)–(5)]	Number of Bolts	Diameter of Bolts [Note (3)]	Length of Bolts
4	230	19.0	135	33	191	3/4	8	5/8	64
5	255	19.0	164	37	216	3/4	8	5/8	64
6	280	19.0	192	40	241	3/4	8	5/8	64
8	345	19.0	246	45	299	3/4	8	5/8	64
10	405	22.2	303	49	368	3/4	12	5/8	70
12	485	25.4	357	56	432	3/4	12	5/8	76
14	535	28.6	391	57	476	7/8	12	3/4	89
16	595	28.6	445	64	540	7/8	16	3/4	89
18	635	31.8	498	68	578	7/8	16	3/4	95
20	700	31.8	552	78	635	7/8	20	3/4	95
24	815	34.9	560	83	749	7/8	20	3/4	102
30	985	38.1	...	...	914	1	28	7/8	114
36	1170	41.3	...	...	1085	1	32	7/8	121
42	1345	44.5	...	...	1257	1 1/8	36	1	133
48	1510	50.8	...	...	1422	1 1/8	44	1	146
54	1685	57.2	...	...	1594	1 1/8	44	1	159
60	1855	57.2	...	...	1759	1 1/4	52	1 1/8	159
72	2195	63.5	...	...	2095	1 1/4	60	1 1/8	172
84	2535	69.9	...	...	2425	1 3/8	64	1 1/4	191
96	2875	76.2	...	...	2756	1 3/8	68	1 1/4	203

GENERAL NOTE: Dimensions are in millimeters.

NOTES:

(1) For facing, see para. 6.2.1.

(2) Threaded companion flanges should not be thinner than the Class 125 thickness on NPS 24 and smaller. Other types of flanges may have thicknesses as given above.

(3) The flange diameter, bolt circle, and number of bolts are the same in Class 25 as in Class 125. Bolt hole diameters of Class 25 shall not be modified when mated with Class 125 flanges or with steel flanges.

(4) For spot facing, see para 6.7.

(5) For flange bolt holes, see para. 6.6.

(6) For bolts and nuts, see para. 7.1.

Copyright ASME International
Provided by IHS under license with ASME
No reproduction or networking permitted without license from IHS
Not for Resale

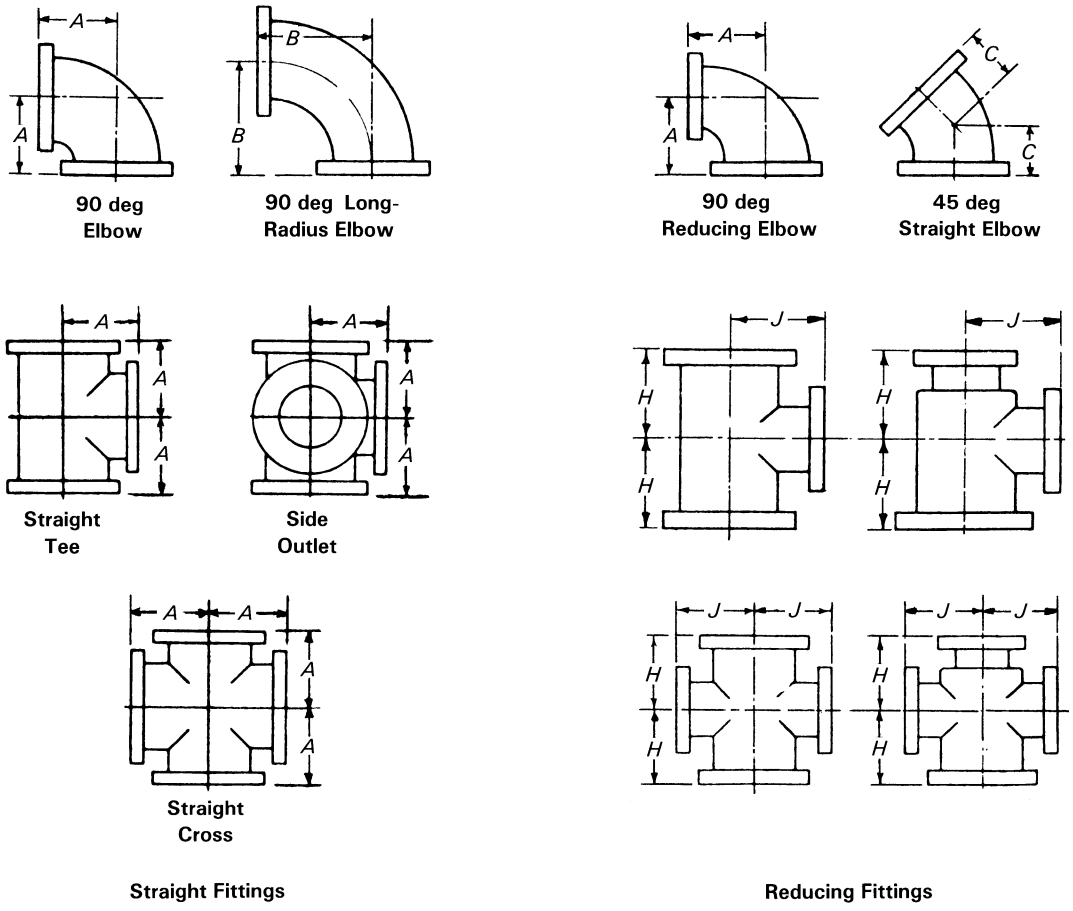

GENERAL NOTE: For dimensions, see Table 3 on next page.

Fig. 3 Class 25 Flanged Fittings

Copyright ASME International
Provided by IHS under license with ASME
No reproduction or networking permitted without license from IHS
Not for Resale

Table 3 Dimensions of Class 25 Gray Iron Flanged Fittings

	General				Straight Size [Note (5)]			Reducing Tees and Crosses (Short-Body Pattern) [Notes (9)–(11)]		
NPS	Diameter of Flange	Thickness of Flange, Min.	Wall Thickness of Body [Note (1)]	Inside Diameter of Fitting	Center-to-Face Elbow, Tee, and Cross, *A* [Notes (2)–(4)]	Center-to-Face Long Radius Elbow, *B*	Center-to-Face 45 deg Elbow, *C* [Note (6)]	NPS Size of Outlet and Smaller [Notes (7) and (8)]	Center-to-Face Run, *H* [Note (5)]	Center-to-Face Outlet, *J* [Note (5)]
4	229	19.0	11	102	165	229	102			
5	254	19.0	11	127	191	260	114			
6	279	19.0	11	152	203	292	127	All reducing fittings NPS 16 and smaller have the same center-to-face dimensions as straight size fittings.		
8	343	19.0	12	203	229	356	140			
10	406	22.2	13	254	279	419	165			
12	483	25.4	14	305	305	483	191			
14	533	28.6	15	356	356	546	191			
16	597	28.6	15	406	381	610	203			
18	645	31.8	16	457	419	673	216	12	330	394
20	698	31.8	17	508	457	737	241	14	356	432
24	813	34.9	19	610	559	864	279	16	381	483
30	984	38.1	22	762	635	1054	381	20	457	584
36	1168	41.3	25	914	711	1245	457	24	508	660
42	1346	44.5	28	1067	787	1435	533	24	584	762
48	1511	50.8	32	1219	864	1626	610	30	660	864
54	1683	57.2	34	1372	991	1816	686	36	737	940
60	1854	57.2	35	1524	1118	2007	762	40	838	1041
72	2197	63.5	41	1829	1346	2388	914	48	1016	1219

GENERAL NOTES:

(a) Dimensions are in millimeters.
(b) For facing, see para. 6.2.1.
(c) For flange bolt holes, refer to Table 2; see also para. 6.6.
(d) For spot facing, see para. 6.7.
(e) For intersecting centerlines of side outlets, see para. 6.3.1.
(f) The flange diameter, bolt circle, and number of bolts are the same in Class 25 as in Class 125. Bolt hole diameters of Class 25 shall not be modified when mated with Class 125 flanges or with steel flanges.
(g) The center-to-face dimensions of fittings are the same as the Class 125.

NOTES:

(1) For wall thickness tolerance, see para. 6.1.
(2) For center-to-face dimensions of reducing elbows and side-outlet elbows, see paras. 6.3.2(b) and (c).
(3) Tees and crosses, reducing on run only, carry same dimensions center-to-face and face-to-face as a straight-size fitting of the larger opening.
(4) For reinforcement of crosses, see para. 6.8.
(5) For center-to-face tolerances, see para. 6.4.
(6) For center-to-face dimensions of special degree elbows, see para. 6.3.2(d).
(7) Tees, side-outlet tees, and crosses, NPS 16 and smaller reducing on the outlet, have the same dimensions center-to-face and face-to-face as straight-size fittings, corresponding to the size of the larger opening. NPS 18 and larger, reducing on the outlet, are made in two lengths, depending on the size of the outlet as given in Table 3.
(8) Long-body patterns are used when outlets are larger than given above and, therefore, have the same dimensions as straight-size fittings.
(9) Fittings reducing on the run only carry same dimensions center-to-face and face-to-face as straight-size fittings, corresponding to the size of the larger opening. Tees increasing on outlet, known as bull-head tees, will have same center-to-face and face-to-face dimensions as a straight fitting of the size of the outlet. For example, an NPS 12 × NPS 18 tee will be governed by the dimensions of the NPS 18 long-body tee, given in Table 3, namely NPS $16\frac{1}{2}$ center-to-face of all openings and NPS 33 face-to-face.
(10) Side-outlet tees, with outlet at 90 deg or any other angle, straight or reducing, carry same dimensions center-to-face and face-to-face as regular tees having same reductions.
(11) In a side outlet tee, the larger of the two side outlets governs the center-to-face dimension *J*.

Copyright ASME International
Provided by IHS under license with ASME
No reproduction or networking permitted without license from IHS
Not for Resale

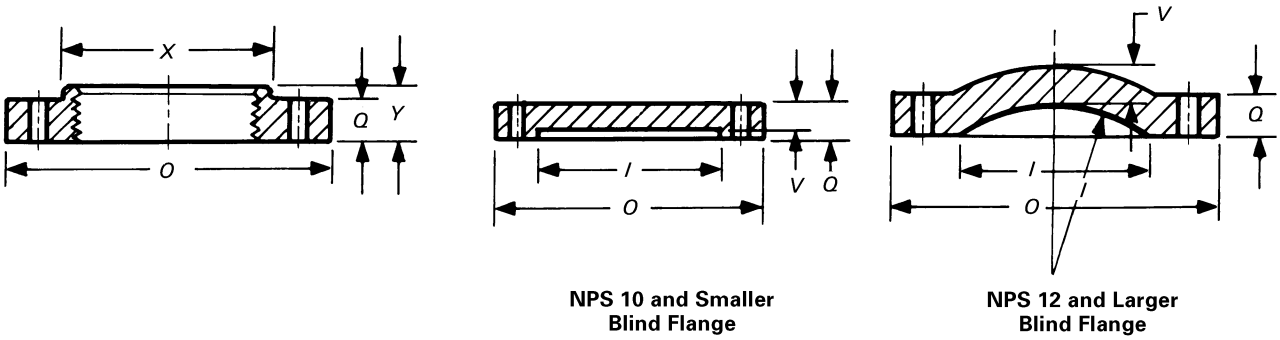

GENERAL NOTE: For dimensions, see Table 4 on next page.

Fig. 4 Class 125 Flanges

Copyright ASME International
Provided by IHS under license with ASME
No reproduction or networking permitted without license from IHS
Not for Resale

Table 4 Class 125 Flange and Bolting Dimensions

	Flanges		Hub		Blind Flanges		Bolt Holes		Bolting			
NPS	Diameter of Flange, *O*	Thickness of Flange, Min., *Q* [Note (1)]	Diameter Min., *X*	Length of Hub and Threads, Min., *Y* [Note (2)]	Diameter of Port, *I* [Note (3)]	Wall Thickness, *V* [Note (4)]	Diameter of Bolt Circle	Diameter of Bolt Holes [Notes (5) and (6)]	Number of Bolts	Diameter of Bolts [Notes (7) and (8)]	Length of Bolts [Notes (7) and (8)]	Length of Bolt Stud With Two Nuts [Note (7)]
1	110	11.1	49	18	25	9.6	79	5/8	4	1/2	45	...
1 1/4	115	12.7	59	21	32	11.1	89	5/8	4	1/2	51	...
1 1/2	125	14.3	65	22	38	12.7	98	5/8	4	1/2	51	...
2	150	15.9	78	25	51	14.3	121	3/4	4	5/8	57	...
2 1/2	180	17.5	91	29	64	15.9	140	3/4	4	5/8	64	...
3	190	19.0	108	30	76	17.5	152	3/4	4	5/8	64	...
3 1/2	215	20.6	122	32	89	19.0	178	3/4	8	5/8	70	...
4	230	23.8	135	33	102	22.2	191	3/4	8	5/8	76	...
5	255	23.8	164	37	127	22.2	216	7/8	8	3/4	76	...
6	280	25.4	192	40	152	23.8	241	7/8	8	3/4	83	...
8	345	28.6	246	45	203	27.0	299	7/8	8	3/4	89	...
10	405	30.2	303	49	254	28.6	362	1	12	7/8	95	...
12	485	31.8	357	56	305	20.6	432	1	12	7/8	95	...
14	535	32.4	391	57	356	22.2	476	1 1/8	12	1	108	...
16	595	36.5	445	64	406	25.4	540	1 1/8	16	1	114	...
18	635	39.7	499	68	457	27.0	578	1 1/4	16	1 1/8	121	...
20	700	42.9	553	73	508	28.6	635	1 1/4	20	1 1/8	127	...
24	815	47.6	660	83	610	31.8	749	1 3/8	20	1 1/4	140	...
30	985	54.0	...	...	762	36.6	914	1 3/8	28	1 1/4	159	...
36	1170	60.3	...	...	914	41.3	1086	1 5/8	32	1 1/2	178	222
42	1345	66.7	...	...	1066	46.0	1257	1 5/8	36	1 1/2	191	235
48	1510	69.9	...	...	1219	50.8	1422	1 5/8	44	1 1/2	197	242
54 (9)	1685	76.2	...	...	...	...	1594	2	44	1 3/8	216	267
60 (9)	1855	79.4	...	...	...	...	1759	2	52	1 3/8	222	273
72 (9)	2195	88.9	...	...	...	...	2096	2	60	1 3/8	241	292
84 (9)	2535	98.4	...	...	...	...	2426	2 1/4	64	2	267	324
96 (9)	2875	108.0	...	...	...	...	2756	2 1/2	68	2 1/4	292	356

GENERAL NOTE: Dimensions are in millimeters.

NOTES:

(1) For facing, see para. 6.2.1.
(2) For thread of threaded flanges, see paras. 6.5.1 and 6.5.2.
(3) All blind flange NPS 12 and larger must be dished with inside radius equal to the port diameter.
(4) For wall thickness tolerance, see para. 6.1.
(5) For flange bolt holes, see para. 6.6.
(6) For spot facing, see para. 6.7.
(7) For bolts and nuts, see para. 7.1.1.
(8) Bolt lengths to be compensated for when bolting steel to gray iron flanges.
(9) NPS 54 through 96 are included for convenience. Pressure-temperature ratings are the user's responsibility.

Copyright ASME International
Provided by IHS under license with ASME
No reproduction or networking permitted without license from IHS Not for Resale

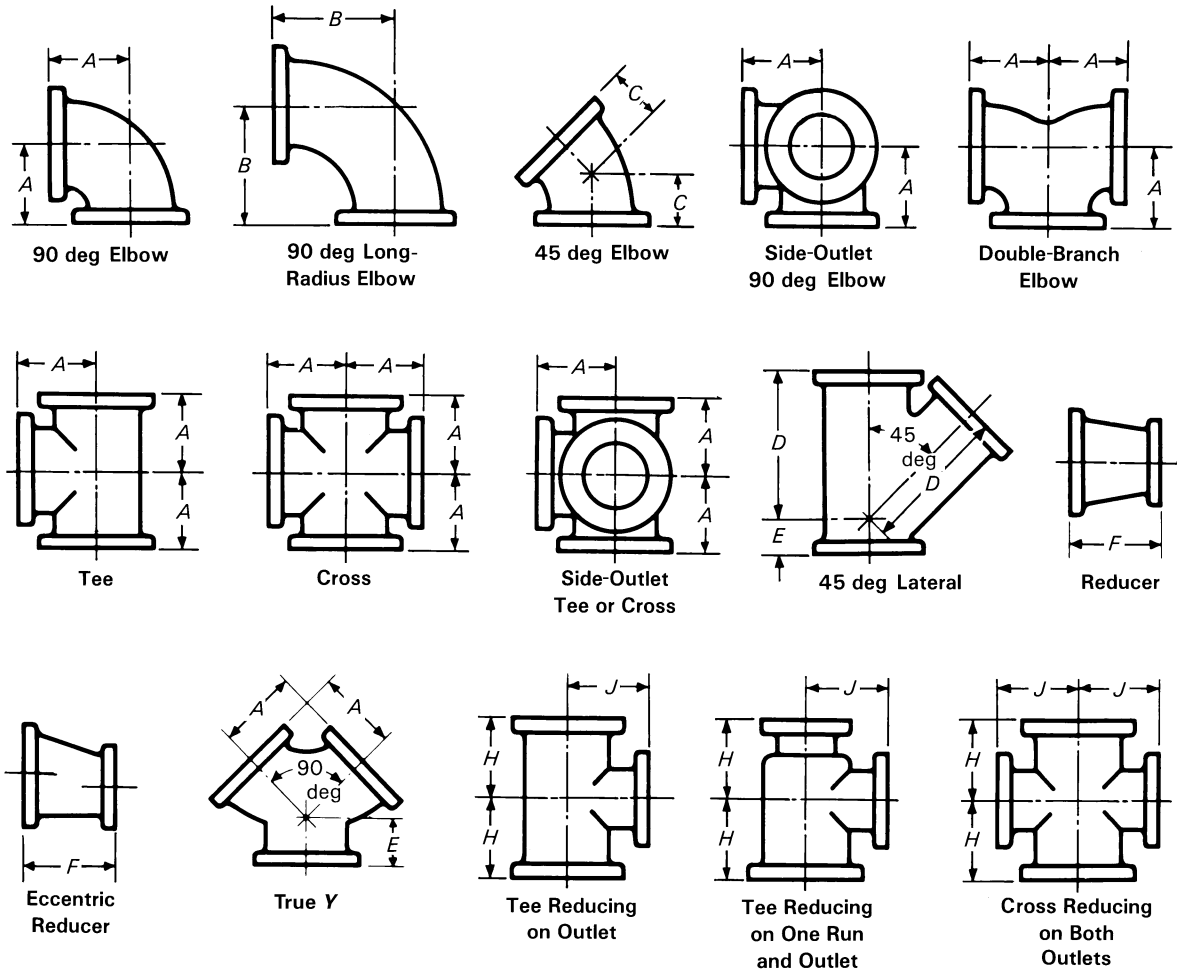

Fig. 5 Class 125 Flanged Fittings

Copyright ASME International
Provided by IHS under license with ASME
No reproduction or networking permitted without license from IHS
Not for Resale

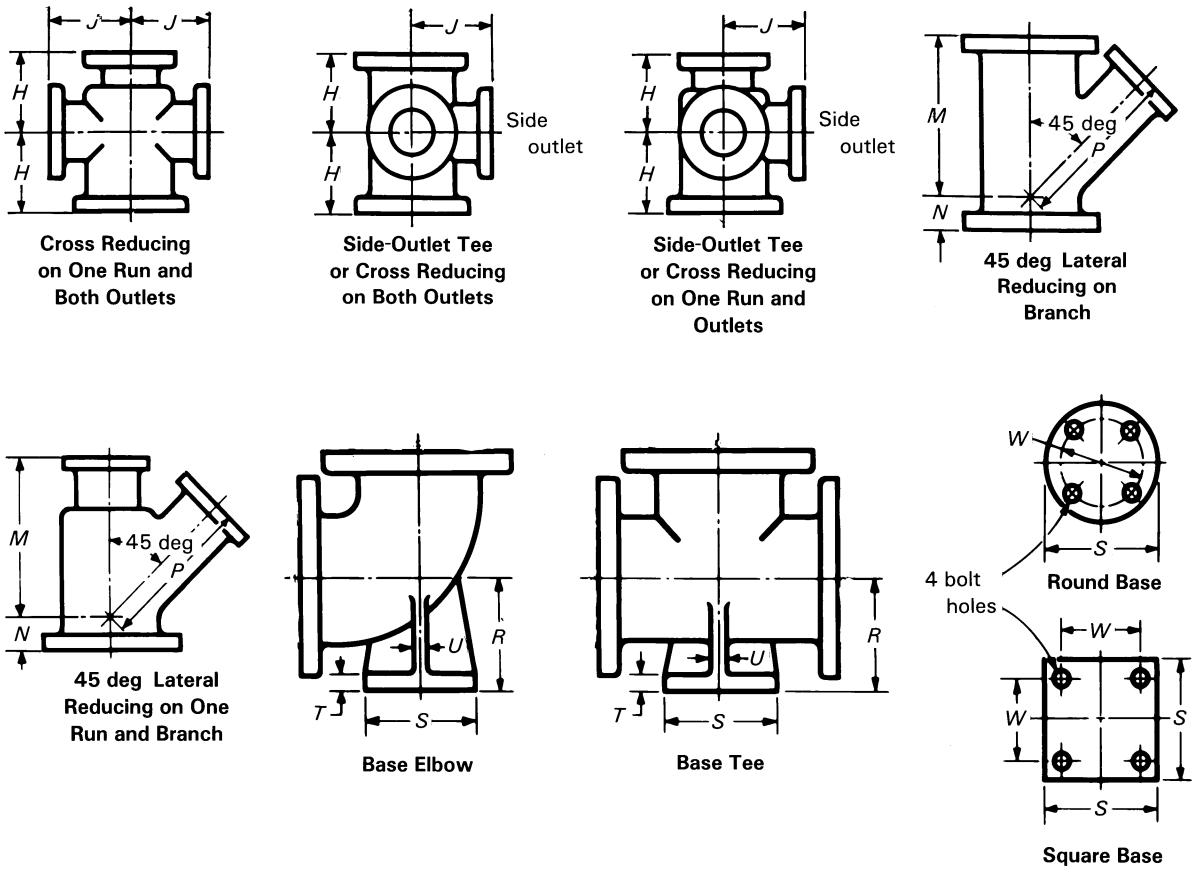

GENERAL NOTE: For dimensions, see Table 5 on next page.

Fig. 5 Class 125 Flanged Fittings (Cont'd)

Copyright ASME International
Provided by IHS under license with ASME
No reproduction or networking permitted without license from IHS
Not for Resale

Copyright ASME International
Provided by IHS under license with ASME
No reproduction or networking permitted without license from IHS

Table 5 Dimensions of Class 125 Gray Iron Flanged Fittings

	Flange [Notes (1)–(3)]		General		Straight Fittings [Notes (5) and (6)]						Reducing Fittings (Short-Body Patterns) [Notes (11) and (12)]		
											Tees and Crosses [Notes (9), (13), and (14)]		
NPS	Diameter of Flange	Thickness of Flange, Min.	Inside Diameter of Fittings	Wall Thickness [Note (4)]	Center-to-Face 90 deg Elbow, Tees, Crosses, True, *Y*, and Double-Branch Elbow, *A* [Notes (6)–(9)]	Center-to-Face 90 deg Long-Radius Elbow, *B* [Notes (6)–(8)]	Center-to-Face 45 deg Elbow, *C* [Note (8)]	Center-to-Face Lateral, *D* [Note (9)]	Short Center-to-Face True, *Y* and Lateral, *E* [Note (9)]	Face-to-Face Reducer, *F* [Note (10)]	NPS Size of Outlet and Smaller [Notes (6) and (10)]	Center-to-Face Run, *H*	Center-to-Face Outlet or Side Outlet, *J*
1	108	11.1	25	7.9	89	127	45	146	45	...			
1¼	118	12.7	32	7.9	95	140	51	159	45	...			
1½	127	14.3	38	7.9	102	152	57	178	51	...			
2	152	15.9	51	7.9	114	165	64	203	64	127			
2½	178	17.5	64	7.9	127	178	76	241	64	140			
3	191	19.0	76	9.5	140	197	76	254	76	152	All reducing tees and crosses 16 in. and smaller shall have the same center-to-face dimensions as straight-size fittings, corresponding to the size of the largest opening.		
3½	216	23.8	89	11.1	152	216	89	292	76	165			
4	229	23.8	102	12.7	165	229	102	305	76	178			
5	254	23.8	127	12.7	191	260	114	343	89	203			
6	279	25.4	152	14.3	203	292	127	368	89	229			
8	343	28.6	203	15.9	229	356	140	445	114	279			
10	406	30.2	254	19.0	279	419	165	521	127	305			
12	483	31.8	305	20.6	305	483	191	622	140	356			
14	533	34.9	356	22.2	356	546	191	686	152	406			
16	597	36.5	406	25.4	381	610	203	762	165	457			
18	635	39.7	457	27.0	419	673	216	813	178	483	12	330	393
20	699	42.9	508	28.6	457	737	241	889	203	508	14	356	432
24	813	47.6	610	31.8	559	864	279	1029	229	610	16	381	483
30	984	54.0	762	36.5	635	1054	381	1245	254	762	20	457	584
36	1168	60.3	914	41.3	711	1245	457	...	...	914	24	508	660
42	1346	66.7	1067	46.0	787	1435	533	...	...	1067	24	584	762
48	1511	69.9	1219	50.8	864	1626	610	...	...	1219	30	660	864

Not for Resale

Copyright ASME International
Provided by IHS under license with ASME
No reproduction or networking permitted without license from IHS

Table 5 Dimensions of Class 125 Gray Iron Flanged Fittings (Cont'd)

	Reducing Fittings (Short-Body Patterns) [Notes (11) and (12)]				Base Elbows and Tees [Notes (15)–(17)]						
	Laterals [Note (9)]									Base Drilling	
NPS	NPS Size of Branch and Smaller	Center-to-Face Run, *M*	Center-to-Face Run, *N*	Center-to-Face Branch, *P*	Center-to-Base, *R*	Diameter of Round Base or Width of Square Base, *S* [Notes (18) and (19)]	Thickness of Base, *T*	Thickness of Ribs, *U*	NPS Size of Supporting Pipe for Base	Bolt Circle or Bolt Spacing, *W*	Diameter of Holes
1					89	89	11	10	3/4	69.9	5/8
1 1/4					92	89	11	10	3/4	69.9	5/8
1 1/2					95	108	11	13	1	79.4	5/8
2					105	118	13	13	1 1/4	88.9	5/8
2 1/2					114	118	13	13	1 1/4	88.9	5/8
3	All reducing laterals NPS 16 and smaller shall have the same center-to-face dimensions as straight-size fittings, corresponding to the size of the largest opening.				124	127	14	13	1 1/2	98.4	5/8
3 1/2					133	127	14	13	1 1/2	98.4	5/8
4					140	152	16	13	2	120.7	3/4
5					159	178	18	16	2 1/2	139.7	3/4
6					178	178	18	16	2 1/2	139.7	3/4
8					213	229	24	22	4	190.5	3/4
10					248	229	24	22	4	190.5	3/4
12					286	279	25	25	6	241.3	7/8
14					318	279	25	25	6	241.3	7/8
16					349	279	25	25	6	241.3	7/8
18	8	635	25	699	381	343	29	29	8	298.5	7/8
20	10	686	25	749	406	343	29	29	8	298.5	7/8
24	12	800	13	876	470	343	29	29	8	298.5	7/8
30	14	991	0	1067	...	...	...	...	...	...	...

Not for Resale

Copyright ASME International
Provided by IHS under license with ASME
No reproduction or networking permitted without license from IHS

Table 5 Dimensions of Class 125 Gray Iron Flanged Fittings (Cont'd)

GENERAL NOTE: Dimensions are in millimeters.

NOTES:

(1) For facing, see para. 6.2.1.
(2) For flange bolt holes, refer to Table 4 and para. 6.6.
(3) For spot facing, see para. 6.7.
(4) For wall thickness tolerances, see para. 6.1.
(5) For center-to-face tolerances, see para. 6.4.
(6) For intersecting centerlines of side-outlet fittings, see para. 6.3.1.
(7) For center-to-face dimensions of reducing elbows and side-outlet elbows, see paras. 6.3.2(b) and (c).
(8) For center-to-face dimensions of special degree elbows, see para. 6.3.2(d).
(9) For reinforcement of crosses and laterals, see para. 6.8.
(10) For face-to-face dimensions of reducers and eccentric reducers, see para. 6.3.5.
(11) For center-to-face dimensions of tees, and crosses having outlets and laterals having branches larger than given above, see para. 6.3.3(b).
(12) For center-to-face dimensions of tees, crosses, and laterals reducing on run only, see para. 6.3.3(b).
(13) For center-to-face dimensions of tees reducing on both runs, known as bull-head tees, see para. 6.3.3(c).
(14) For center-to-face dimensions of reducing side-outlet tees and crosses having two different size reductions on the outlets, see para. 6.3.3(b).
(15) Bases are furnished only when specified by the purchaser.
(16) For tees larger than NPS 24, anchorage fittings are recommended. See Table 8.
(17) The base dimension applies to all straight and reducing sizes.
(18) For reducing fittings, the size and center-to-face dimensions of base are determined by the size of the largest opening of the fitting. In the case of reducing base elbows, orders shall specify whether the base shall be opposite the larger or smaller opening.
(19) Bolt hole template shown for round base is the same as for the flange of the supporting pipe size, except using only four holes in all cases so placed as to straddle centerlines. The bases of these fittings are intended for support in compression and are not to be used for anchors or supports in tension or shear.

Not for Resale

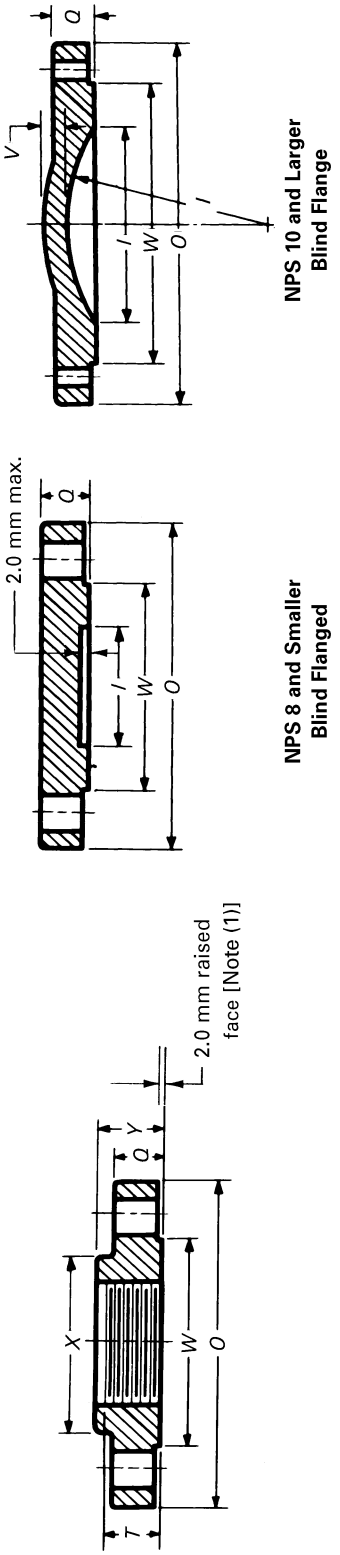

Fig. 6 Class 250 Flanges

GENERAL NOTE: For dimensions, see Table 6 on next page.

NOTE:

(1) Diameter of raised face has tolerance of ± 0.8 mm.

Copyright ASME International
Provided by IHS under license with ASME
No reproduction or networking permitted without license from IHS
Not for Resale

Copyright ASME International
Provided by IHS under license with ASME
No reproduction or networking permitted without license from IHS

Table 6 Class 250 Flange and Bolting Dimensions

NPS	Flanges			Blind Flanges [Note (2)]		Hubs			Bolt Holes		Bolting [Note (6)]			
	Diameter of Flange, *O*	Thickness of Flange, Min., *Q*	Diameter of Raised Face, *W* [Note (1)]	Diameter of Port, *I*	Wall Thickness, *V* [Note (3)]	Diameter of Hub, Min., *X*	Length Through Hub, Min., *Y*	Length of Threads, Min., *T* [Note (4)]	Diameter of Bolt Circle	Diameter of Bolts [Note (5)]	Number of Bolts	Diameter of Bolts [Note (7)]	Length of Bolts [Note (8)]	Length of Stud Bolts [Note (8)]
1	125	17.5	68	25	...	52	22	18	89	3/4	4	5/8	64	...
1 1/4	135	19.0	78	32	...	64	25	19	98	3/4	4	5/8	64	...
1 1/2	155	20.6	91	38	...	70	29	22	114	7/8	4	3/4	70	...
2	165	22.2	106	51	...	84	32	25	127	3/4	8	5/8	70	...
2 1/2	190	25.4	125	64	...	100	37	29	149	7/8	8	3/4	83	...
3	210	28.6	144	76	...	118	40	31	168	7/8	8	3/4	89	...
3 1/2	230	30.2	160	89	...	133	41	32	184	7/8	8	3/4	89	...
4	255	31.8	176	102	...	146	44	33	200	7/8	8	3/4	95	...
5	280	34.9	211	127	...	178	48	36	235	7/8	8	3/4	102	...
6	320	36.5	246	152	...	206	49	39	270	7/8	12	3/4	102	...
8	380	41.3	303	203	...	260	56	43	330	1 1/8	12	7/8	114	...
10	445	47.6	357	254	23.8	321	60	49	387	1 1/4	16	1	131	...
12	520	50.8	418	305	25.4	375	65	54	451	1 1/4	16	1 1/8	140	...
14	585	54.0	481	337	28.6	413	68	57	514	1 3/8	20	1 1/8	152	...
16	650	57.2	535	387	31.8	467	73	62	572	1 3/8	20	1 1/4	159	...
18	710	60.3	592	432	34.9	...	...	...	629	1 3/8	24	1 1/4	165	...
20	775	63.5	649	483	38.1	...	...	...	686	1 3/8	24	1 1/4	172	...
24	915	69.8	770	584	41.3	...	...	...	813	1 5/8	24	1 1/2	191	241
30	1090	76.2	945	737	50.8	...	...	...	997	2	28	1 3/4	216	268
36 (9)	1270	85.7	1110	...	...	...	...	...	1168	2 1/4	32	2	241	298
42 (9)	1450	93.7	1281	...	...	...	...	...	1340	2 1/4	36	2	254	318
48 (9)	1650	101.6	1484	...	...	...	...	...	1543	2 1/4	40	2	273	330

GENERAL NOTE: Dimensions are in millimeters.

NOTES:

(1) For facing, see para. 6.2.2.

(2) All blind flanges for NPS 10 and larger must be dished with inside radius equal to the port diameter.

(3) For wall thickness tolerances, see para. 6.1.

(4) For thread of threaded flanges, see paras. 6.5.1 and 6.5.3.

(5) For flange bolt holes, see para. 6.6.

(6) For bolts and nuts, see para. 7.1.

(7) For spot facing, see para. 6.7.

(8) When bolting to steel flanges, longer bolts or studs shall be used.

(9) NPS 36-48 are not produced and used in sufficient quantities to warrant standardization; however, the flange dimensions are included for convenience where special fittings larger than NPS 30 are required. When these fittings are made, the body structure should be designed to be the equivalent of the flanges in service pressure fittings.

Not for Resale

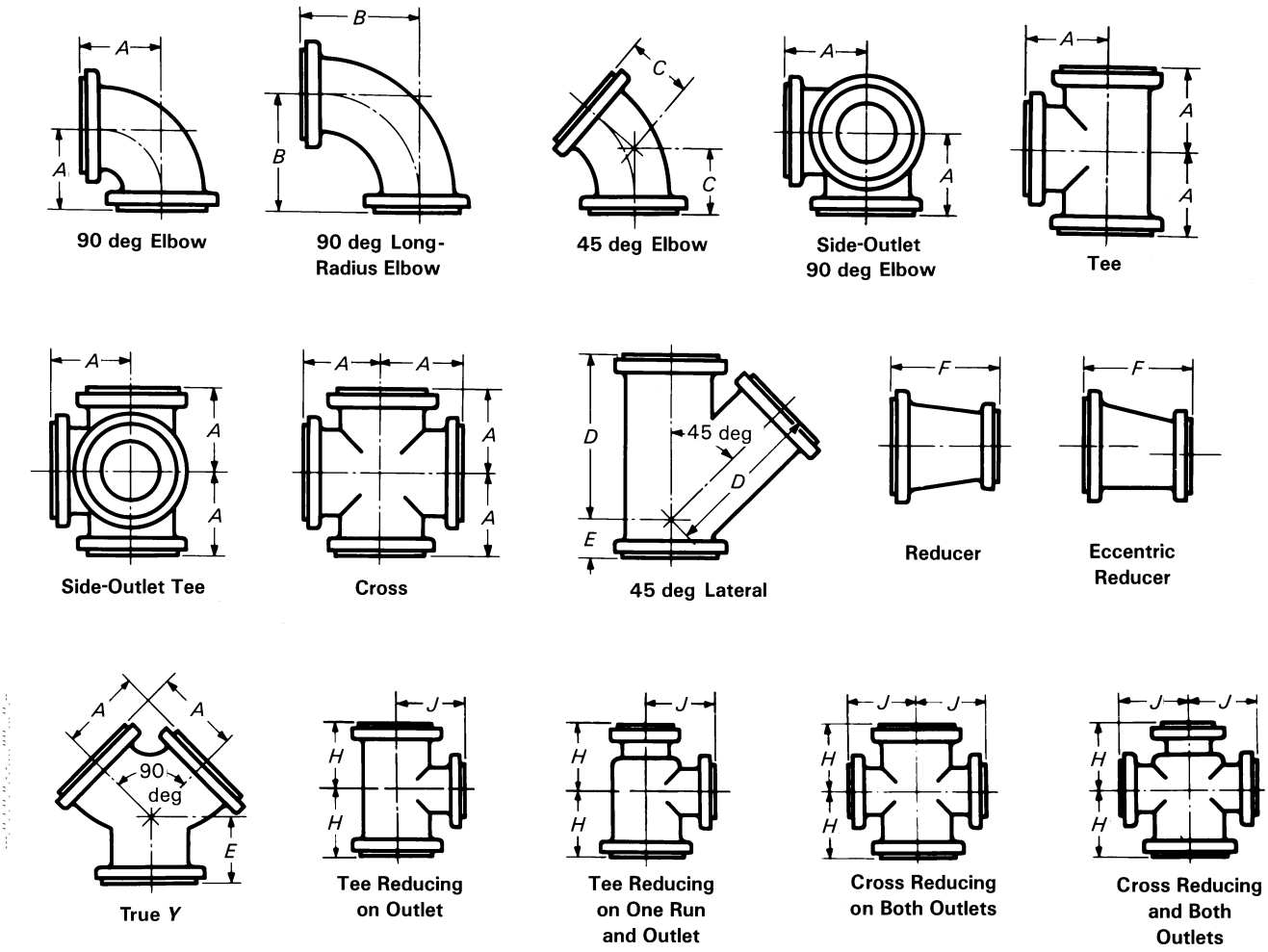

Fig. 7 Class 250 Flanged Fittings

Copyright ASME International
Provided by IHS under license with ASME
No reproduction or networking permitted without license from IHS
Not for Resale

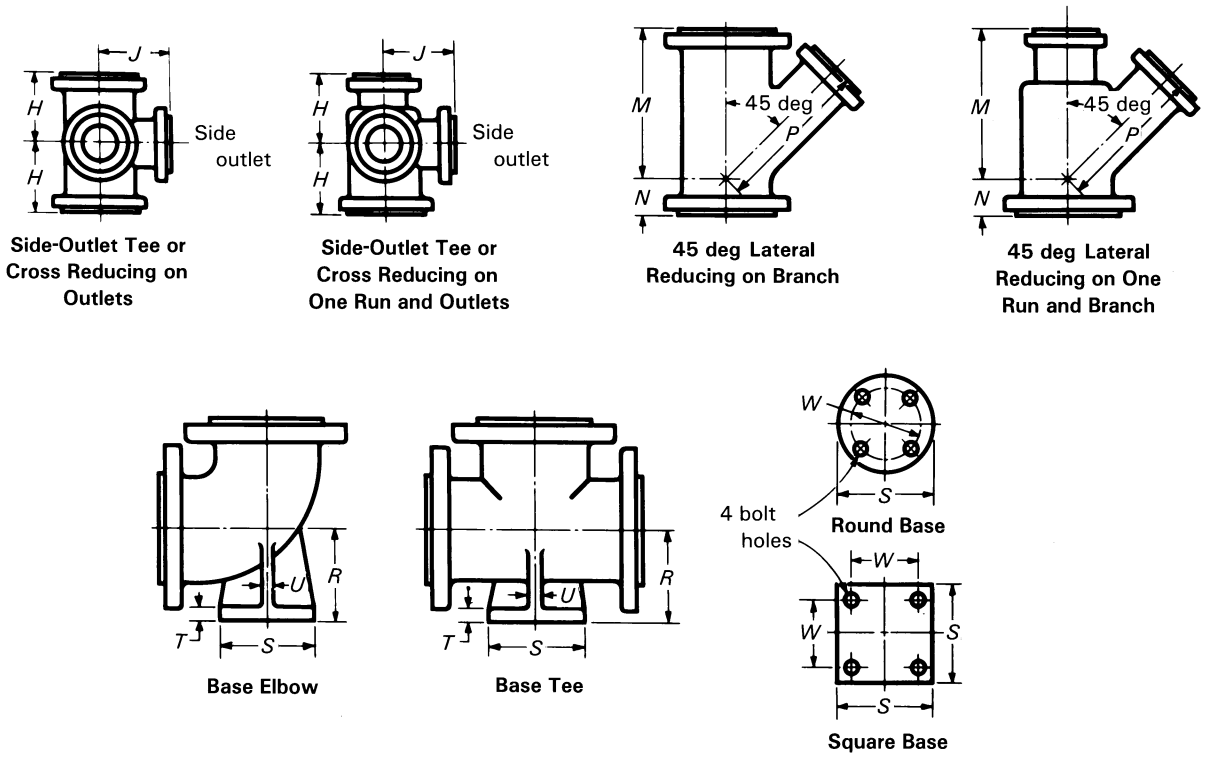

GENERAL NOTE: For dimensions, see Table 7 on next page.

Fig. 7 Class 250 Flanged Fittings (Cont'd)

Copyright ASME International
Provided by IHS under license with ASME
No reproduction or networking permitted without license from IHS
Not for Resale

Copyright ASME International
Provided by IHS under license with ASME
No reproduction or networking permitted without license from IHS

Table 7 Dimensions of Class 250 Gray Iron Flanged Fittings

	Flanges [Notes (1)–(3)]			General Fittings [Notes (5) and (6)]		Straight Fittings [Notes (5) and (6)]						Reducing (Short Body) Tees and Crosses [Notes (10), (13), and (14)]		
NPS	Diameter of Flange	Thickness of Flange, Min., *Q*	Diameter of Raised Face [Note (4)]	Inside Diameter of Fittings	Body Wall Thickness [Note (7)]	Center-to-Face 90 deg Elbow, Tees, Crosses, and True, *Y*, *A* [Notes (8)–(10)]	Center-to-Face 90 deg Long-Radius Elbow, *B* [Notes (6), (8), and (9)]	Center-to-Face 45 deg Elbow, *C* [Note (9)]	Center-to-Face Lateral, *D* [Notes (10) and (11)]	Short Center-to-Face True, *Y* and Lateral, *E* [Notes (10) and (11)]	Face-to-Face Reducer, *F* [Note (12)]	NPS Size of Outlet and Smaller [Notes (6) and (12)]	Center-to-Face Run, *H* [Notes (8) and (9)]	Center-to-Face Outlet or Side Outlet, *J*
1	124	17.5	68	25	11.1	102	127	51	165	57	...			
$1\frac{1}{4}$	133	19.0	78	32	11.1	108	140	64	184	57	...			
$1\frac{1}{2}$	156	20.6	91	38	11.1	114	152	70	216	64	...	All reducing tees and crosses NPS 16 and smaller shall have the same center-to-face dimensions as straight-size fittings, corresponding to the size of the largest opening.		
2	165	22.2	106	51	11.1	127	165	76	229	64	127			
$2\frac{1}{2}$	191	25.4	125	64	12.7	140	178	89	267	64	140			
3	210	28.6	144	76	14.3	152	197	89	279	76	152			
$3\frac{1}{2}$	229	30.2	160	89	14.3	165	216	102	318	76	165			
4	254	31.8	176	102	15.9	178	229	114	343	76	178			
5	279	34.9	211	127	17.5	203	260	127	381	89	203			
6	318	36.5	246	152	19.0	216	292	140	445	102	229			
8	381	41.3	303	203	20.6	254	356	152	521	127	279			
10	445	47.6	357	254	23.8	292	419	178	610	140	305			
12	521	50.8	418	305	25.4	330	483	203	699	152	356			
14	584	54.0	481	337	28.6	381	546	216	787	165	406			
16	648	57.2	535	387	31.8	419	609	241	876	191	457			
18	711	60.3	592	432	34.9	457	673	254	953	203	483	12	356	432
20	775	63.5	649	483	38.1	495	737	267	1029	216	508	14	394	470
24	916	69.8	770	584	41.3	572	864	305	1207	254	610	16	432	546
30	1092	76.2	945	737	50.8	699	1054	381	...	...	762	20	521	648

Not for Resale

Copyright ASME International
Provided by IHS under license with ASME
No reproduction or networking permitted without license from IHS

Table 7 Dimensions of Class 250 Gray Iron Flanged Fittings (Cont'd)

	Reducing (Short Body) [Note (11), (15)] Laterals [Note (10)]				Base, Elbows, and Tees [Notes (16)–(18)]						
										Base Drilling [Note (20)]	
NPS	NPS Size of Branch and Smaller	Center-to-Face Run, *M*	Center-to-Face Run, *N*	Center-to-Face Run, *P*	Center-to-Base, *R*	Diameter of Round Base or Width of Square Base, *S* [Note (19)]	Thickness of Base, *T*	Thickness of Ribs, *U*	NPS Size of Supporting Pipe for Base	Bolt Circle or Bolt Spacing, *W*	Diameter of Holes
2					114	133	19	13	1¼	98	¾
2½					121	133	19	13	1¼	98	¾
3					133	156	21	16	1½	114	⅞
3½	All reducing laterals NPS 16 and smaller shall have the same center-to-face dimensions as straight-size fittings, corresponding to the size of the largest opening.				143	156	21	16	1½	114	⅞
4					152	165	22	16	2	127	¾
5					171	191	25	19	2½	149	⅞
6					191	191	25	19	2½	149	⅞
8					229	254	32	22	4	200	⅞
10					267	254	32	22	4	200	⅞
12					305	318	37	25	6	270	⅞
14					343	318	37	25	6	270	⅞
16					375	318	37	29	6	270	⅞
18	8	787.0	76	826	413	381	41	29	8	330	1
20	10	864.0	76	914	454	381	41	32	8	330	1
24	12	1041.0	76	1092	527	445	48	32	10	387	1⅛

Not for Resale

Copyright ASME International
Provided by IHS under license with ASME
No reproduction or networking permitted without license from IHS

Table 7 Dimensions of Class 250 Gray Iron Flanged Fittings (Cont'd)

GENERAL NOTE: Dimensions are in millimeters.

NOTES:

(1) For facing, see para. 6.2.2.
(2) For flange bolt holes, refer to Table 6 and para. 6.6.
(3) For spot facing, see para. 6.7.
(4) Tolerance of the diameter of the raised face is equal to ±0.8 mm.
(5) For center-to-face tolerances, see para. 6.4.
(6) For intersecting centerlines of side-outlet fittings, see para. 6.3.1.
(7) For wall thickness tolerances, see para. 6.1.
(8) For center-to-face dimensions of reducing elbows and side-outlet elbows, see paras. 6.3.2(b) and (c).
(9) For center-to-face dimensions of special degree elbows, see para. 6.3.2(d).
(10) For reinforcement of crosses and laterals, see para. 6.8.
(11) For center-to-face dimensions of tees and crosses having outlets and laterals having branches larger than given above, see para. 6.3.3(b).
(12) For face-to-face dimensions of reducers and eccentric reducers, see para. 6.3.5.
(13) For center-to-face dimensions of tees reducing on both runs, known as bull-head tees, see para. 6.3.3(c).
(14) For center-to-face dimensions of reducing side-outlet tees and crosses having two different size reductions on the outlet, see para. 6.3.3(b).
(15) For center-to-face dimensions of tees, crosses, and laterals reducing on run only, see para. 6.3.3(b).
(16) Bases are furnished only when specified by purchaser.
(17) The base dimensions apply to all straight and reducing sizes.
(18) For tees, sizes larger than NPS 24, anchorage fittings are recommended. See Table 9.
(19) For reducing fittings, the size and center-to-face dimensions of base are determined by the size of the largest opening of the fitting. In the case of reducing base elbows, orders shall specify whether the base shall be opposite the larger or smaller opening.
(20) Bolt hole template shown for round base is the same as for the flange of the supporting pipe size, except using only four holes in all cases so placed as to straddle centerlines. The bases of these fittings are intended for support in compression and are not to be used for anchors or supports in tension or shear.

Not for Resale

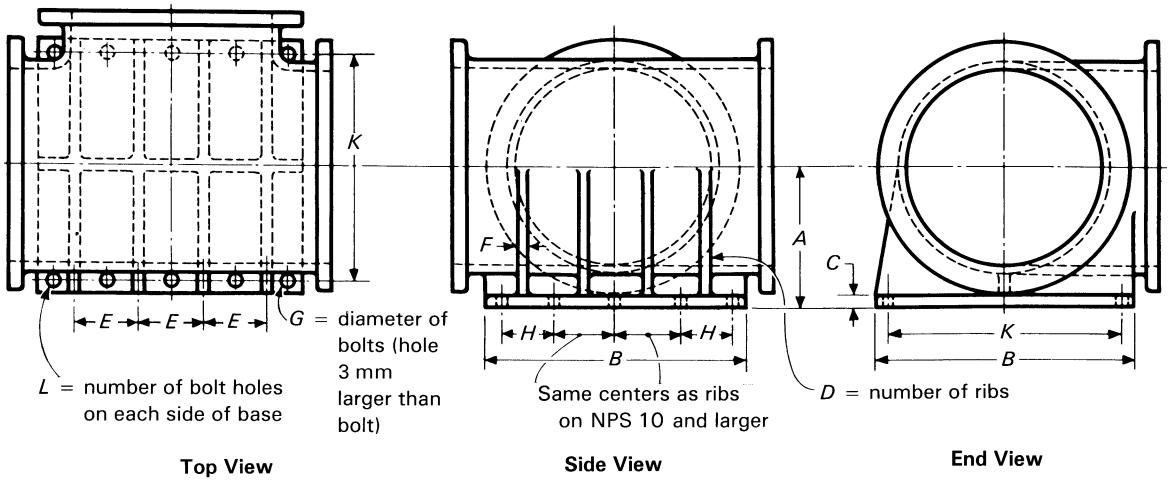

Straight Sizes

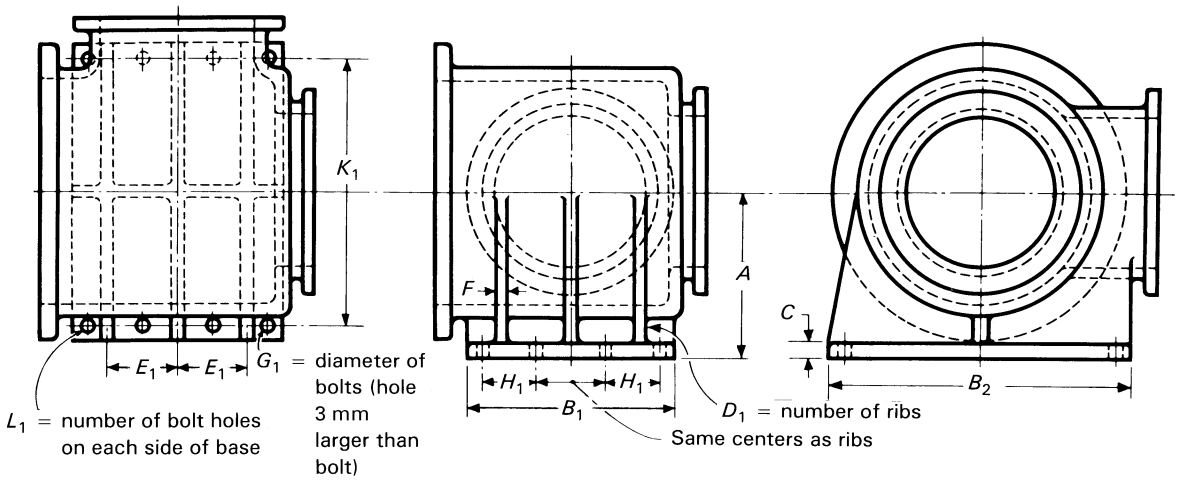

Reducing Sizes, Short Body Pattern

GENERAL NOTE: For dimensions, see Table 8 on next page.

Fig. 8 Class 125 Tees (Anchorage Bases)

Copyright ASME International
Provided by IHS under license with ASME
No reproduction or networking permitted without license from IHS
Not for Resale

Copyright ASME International
Provided by IHS under license with ASME
No reproduction or networking permitted without license from IHS

Table 8 Dimensions of Anchorage Bases for Straight and Reducing Class 125 Tees

	Common to Both Straight Sizes and Reducing Sizes				Straight Sizes						Reducing Sizes [Notes (1) and (2)] (Short Body Pattern)								
NPS	Center to Base, *A*	Thickness of Base, *C* [Note (1)]	Diameter of Bolts, *G*	Thickness of Ribs, *F*	Width and Length of Square Base, *B*	Transverse Bolt Centers, *K*	Number of Bolt Holes on Each Side of Base, *L*	Number of Ribs, *D*	Centers of Ribs and Inside Bolt Holes, *E*	Longitudinal Centers From End Bolt to Second End, *H*									
2½	114	18	⅝	11	178	114	2	1	...	114									
3	124	19	⅝	11	191	127	2	1	...	127									
3½	133	21	⅝	11	216	152	2	1	...	152									
4	140	24	⅝	13	229	165	3	2	108	83									
5	159	24	⅞	13	254	191	3	2	127	95									
6	178	25	⅞	14	279	222	3	2	152	111	Reducing tee sizes NPS 16 and smaller shall have the same base (*R*) dimensions as a straight-size tee, corresponding to the size of the largest opening.								
8	273	29	1	16	343	279	3	2	203	140									
10	248	30	1⅛	19	406	340	4	3	124	108									
12	286	32	1¼	21	483	394	4	3	146	124									
14	318	35	1¼	22	533	451	4	3	172	140									
16	349	37	1⅜	25	597	502	4	3	197	152									
18	381	40	1⅜	27	635	552	4	3	216	168	12	483	3	133	1¼	130	546	4	629
20	406	43	1½	29	699	610	4	3	241	184	14	533	3	152	1¼	137	591	4	679
24	470	48	1⅝	32	813	721	4	3	289	216	16	597	3	178	1⅜	159	711	4	803
30	559	54	1¾	37	984	876	5	4	238	200	20	699	3	229	1½	184	883	4	991
36	648	60	1⅞	41	1168	1035	5	4	286	232	24	813	3	273	1½	213	1054	4	1187
42	743	67	2	46	1346	1187	5	4	330	264	24	927	4	216	1⅝	191	1232	5	1391
48	832	70	2¼	51	1511	1353	5	4	378	298	30	1060	4	248	1⅝	210	1365	5	1524

GENERAL NOTES:

(a) Dimensions are in millimeters.

(b) Bases are furnished only when specified by the purchaser.

(c) For tee dimensions, refer to Table 5.

NOTES:

(1) For NPS 18 and larger, if the outlet is the same size or smaller than given for reducing tees, the base dimensions shown in this table shall be used. If the outlet is larger than shown for reducing tees, the base dimensions shall be the same as for the straight-size tee, corresponding to the size of the largest opening.

(2) Tees reducing on run only shall have the same base dimensions as straight-size tees, corresponding to the size of the largest opening.

Not for Resale

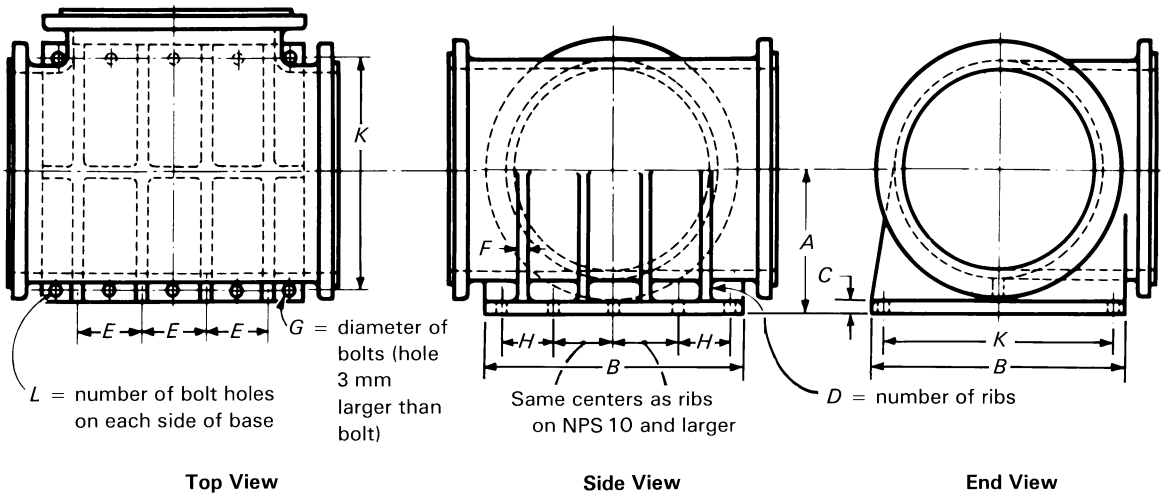

Straight Sizes

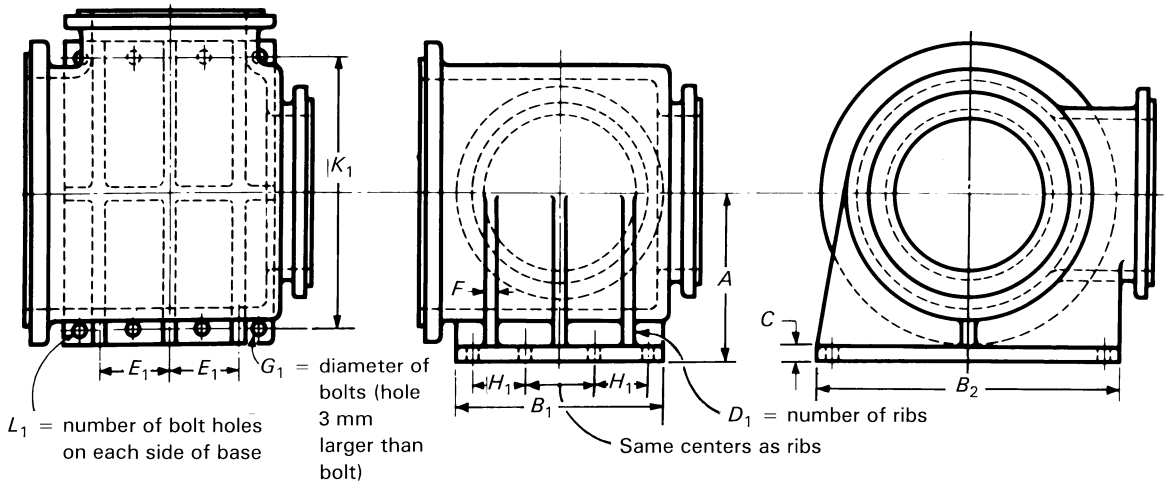

Reducing Sizes, Short Body Pattern

GENERAL NOTE: For dimensions, see Table 9 on next page.

Fig. 9 Class 250 Tees (Anchorage Bases)

Copyright ASME International
Provided by IHS under license with ASME
No reproduction or networking permitted without license from IHS
Not for Resale

Copyright ASME International
Provided by IHS under license with ASME
No reproduction or networking permitted without license from IHS

Table 9 Dimensions of Anchorage Bases for Straight and Reducing Class 250 Tees

	Common on Both Straight Sizes and Reducing Sizes				Straight Sizes						Reducing Sizes (Short-Body Pattern) [Notes (2) and (3)]					
NPS	Center to Base, *A*	Thickness of Base, *C* [Notes (1) and (2)]	Diameter of Bolts, *G*	Thickness of Ribs, *F*	Width and Length of Square Base, *B*	Transverse Bolt Centers, *K*	Number of Bolt Holes on Each Side of Base, *L*	Number of Ribs, *D*	Centers of Ribs, and Inside Bolt Holes *E*	Longitudinal Centers From End Bolt to Second End, *H*	NPS Outlet Sizes and Smaller [Note (2)]	Length of Base, B_1	Centers of Ribs, E_1	Longitudinal Centers From End Bolt to Second End, H_1	Transverse Bolt Centers, K_1	Width of Base, B_2
$2\frac{1}{2}$	121	19	$\frac{5}{8}$	14	190	146	2	1	...	146						
3	133	21	$\frac{5}{8}$	14	210	165	2	1	...	165						
$3\frac{1}{2}$	143	24	$\frac{5}{8}$	14	229	184	2	1	...	184						
4	152	24	$\frac{5}{8}$	16	254	197	3	2	102	98						
5	171	25	$\frac{7}{8}$	18	279	222	3	2	127	111						
6	190	27	$\frac{7}{8}$	19	318	260	3	2	152	130	Reducing tee sizes NPS 16 and smaller shall have the same base (*R*) dimensions as a straight-size tee, corresponding to the size of the largest opening.					
8	229	29	1	21	381	318	3	2	203	159						
10	267	32	$1\frac{1}{8}$	24	444	375	4	3	127	124						
12	305	32	$1\frac{1}{4}$	25	521	444	4	3	152	146						
14	343	35	$1\frac{1}{4}$	29	584	508	4	3	178	165						
16	375	40	$1\frac{3}{8}$	32	648	559	4	3	203	178						
18	413	43	$1\frac{3}{8}$	35	711	616	4	3	229	194	12	521	165	133	622	718
20	454	48	$1\frac{1}{2}$	38	775	679	4	3	254	213	14	584	178	152	673	768
24	527	52	$1\frac{5}{8}$	41	914	806	4	3	305	251	16	648	206	170	813	921
30	629	59	$1\frac{3}{4}$	51	1092	965	5	4	254	229	20	775	168	156	965	1092

GENERAL NOTES:

(a) Dimensions are in millimeters.

(b) For tee dimensions, refer to Table 7.

NOTES:

(1) Bases are furnished only when specified by the purchaser.

(2) For NPS 18 and larger, if the outlet is the same size or smaller than given for reducing tees, the base dimensions shown in this table for reducing tees shall be used. If the outlet is larger than shown for reducing tees, the base dimensions shall be the same as for the straight-size tees, corresponding to the size of the largest opening.

(3) Tees reducing on run only shall have the same base dimensions as straight-size tees, corresponding to the size of the largest opening.

Not for Resale

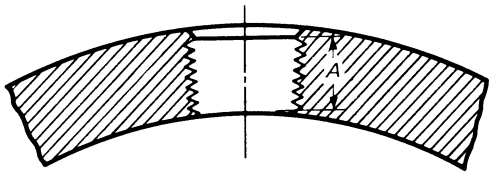

Fig. 10 Drain Connections

Table 10 Minimum Thread Length

Tap Size, NPS	Thread Length, *A*, mm
3/8	10.4
1/2	13.5
3/4	14.0
1	17.3
1 1/4	18.0
1 1/2	18.3
2	19.3

Copyright ASME International
Provided by IHS under license with ASME
No reproduction or networking permitted without license from IHS Not for Resale

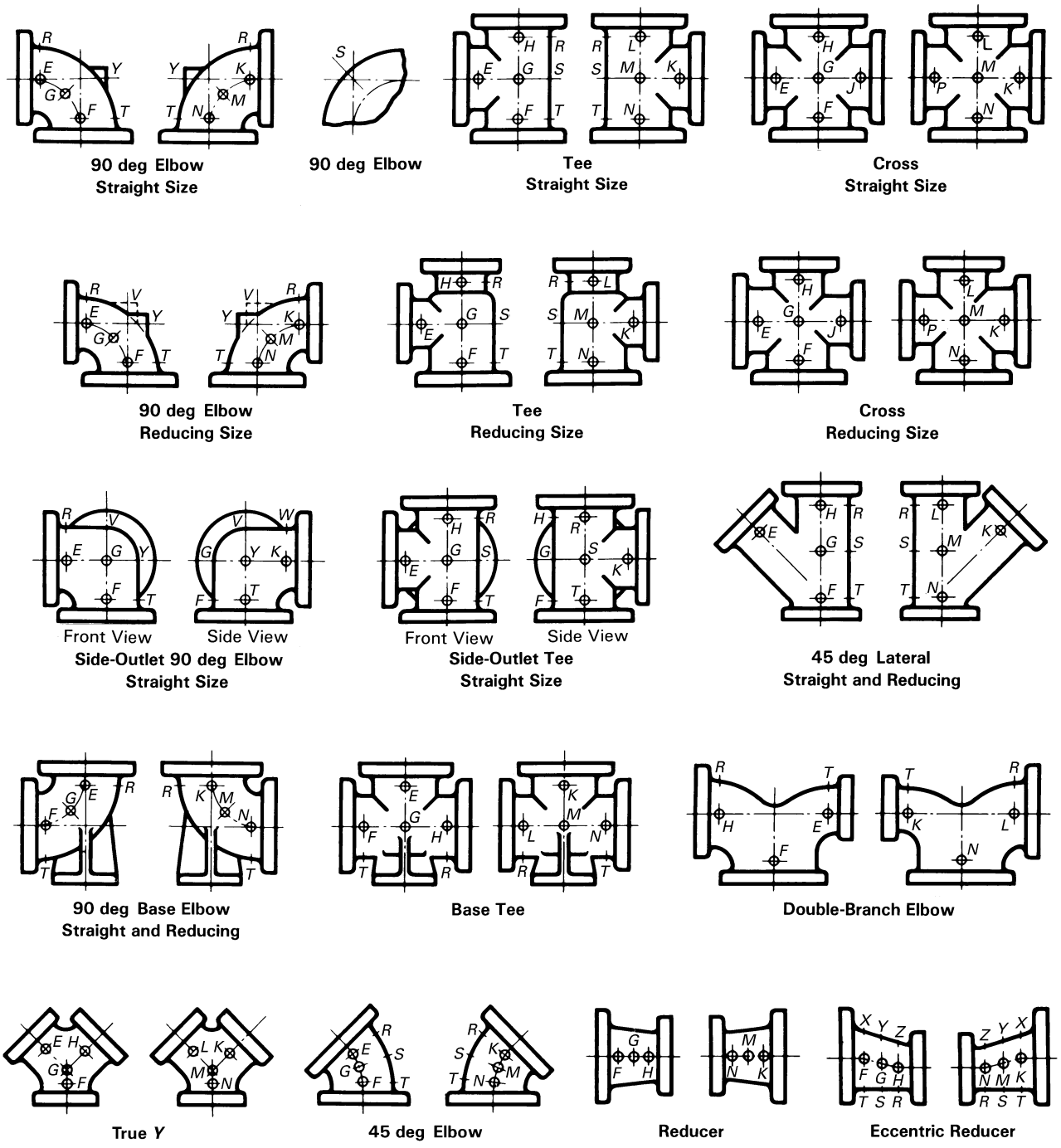

GENERAL NOTE: The above sketches show two views of the same fitting and represent fittings with symmetrical shapes, with the exception of the side-outlet elbow and the side-outlet tee (straight sizes).

Fig. 11 Method of Designating Location of Tapped Holes for Drains When Specified

Copyright ASME International
Provided by IHS under license with ASME
No reproduction or networking permitted without license from IHS
Not for Resale

Copyright ASME International
Provided by IHS under license with ASME
No reproduction or networking permitted without license from IHS
Not for Resale

MANDATORY APPENDIX I
DIMENSIONS OF FITTINGS IN U.S. CUSTOMARY UNITS

This Appendix provides tables of the standard inch dimensions for fittings.

Table I-1 Pressure–Temperature Ratings

Temperature, °F	Class 25 [Note (1)] ASTM A 126 Class A		Class 125 ASTM A 126				Class 250 [Note (1)] ASTM A 126			
			Class A	Class B			Class A	Class B		
	NPS 4–36	NPS 42–96	NPS 1–12	NPS 1–12	NPS 14–24	NPS 30–48	NPS 1–12	NPS 1–12	NPS 14–24	NPS 30–48
−20 to 150	45	25	175	200	150	150	400	500	300	300
200	40	25	165	190	135	115	370	460	280	250
225	35	25	155	180	130	100	355	440	270	225
250	30	25	150	175	125	85	340	415	260	200
275	25	25	145	170	120	65	325	395	250	175
300	...	...	140	165	110	50	310	375	240	150
325	...	...	130	155	105	...	295	355	230	125
353 (2)	...	...	125	150	100	...	280	335	220	100
375	...	...	...	145	...	...	265	315	210	...
406 (3)	...	...	...	140	...	...	250	290	200	...
425	...	...	...	130	...	...	...	270	...	...
450	...	...	...	125	...	...	...	250	...	...
Hydrostatic Shell Test Pressures [Note (4)]										
100	70	40	270	300	230	230	600	750	450	450

GENERAL NOTE: Pressure is in psi.

NOTES:

(1) Limitations:

(a) Class 25. When Class 25 gray iron flanges and flanged fittings are used for gaseous service, the maximum pressure shall be limited to 25 psi. Tabulated pressure–temperature ratings above 25 psi. for Class 25 gray iron flanges and flanged fittings are applicable for nonshock hydraulic service only.

(b) Class 250. When used for liquid service, the tabulated pressure–temperature ratings NPS ≥ 14 are applicable to Class 250 flanges only and not to Class 250 fittings.

(2) 353°F to reflect the temperature of saturated steam at 125 psi.

(3) 406°F to reflect the temperature of saturated steam at 250 psi.

(4) Hydrostatic tests are not required unless specified by the user.

Copyright ASME International
Provided by IHS under license with ASME
No reproduction or networking permitted without license from IHS
Not for Resale

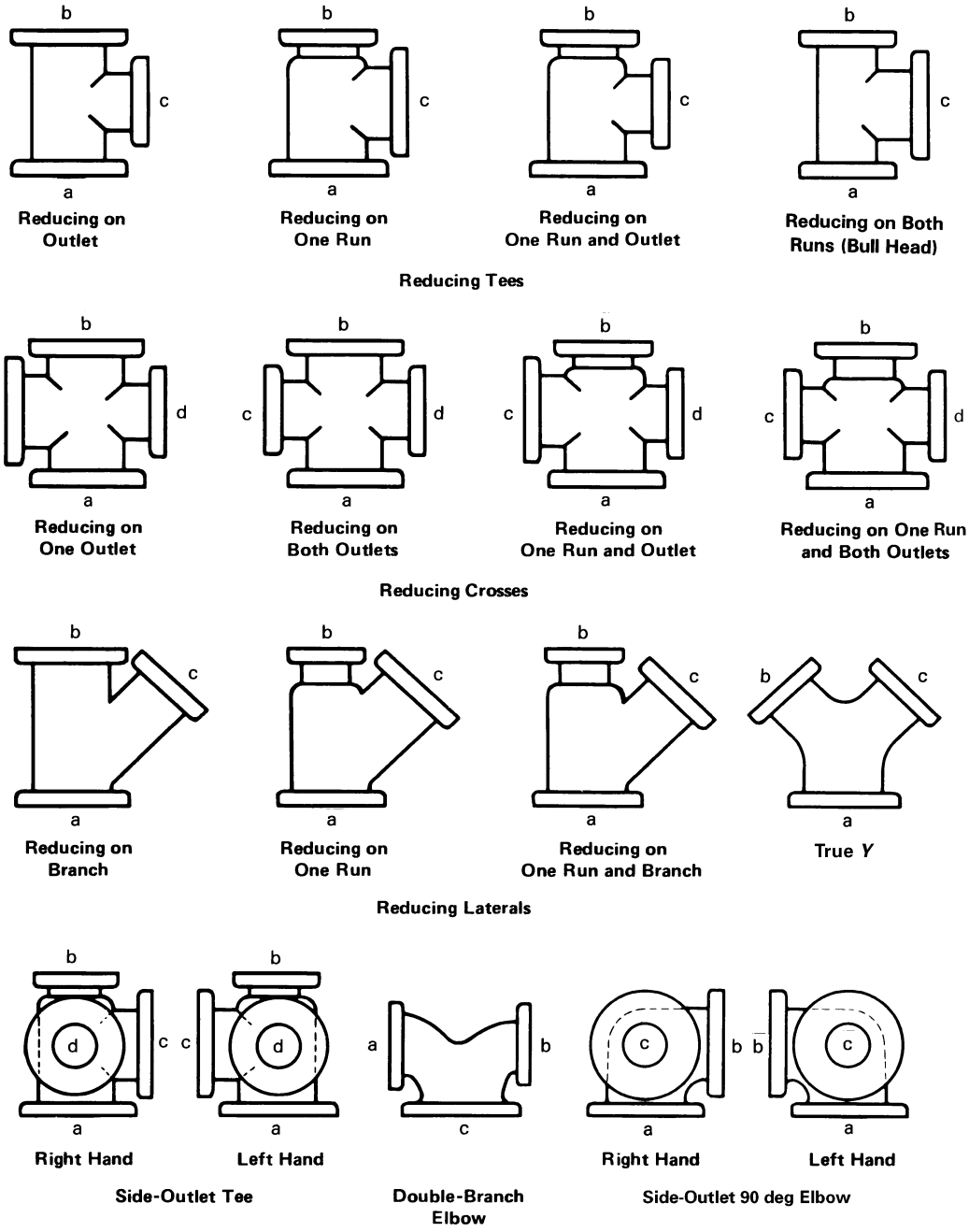

GENERAL NOTES:

(a) The largest opening establishes the basic size of reducing fitting. The largest opening is named first, except for bull-head tees, which are reducing on both runs, and double-branch elbows where both branches are reducing; the outlet is the largest opening and named last in both cases.

(b) In designating the openings of reducing fittings, they should be read in the order indicated by the sequence of the letters a, b, c, and d. In designating the outlets of side-outlet reducing fittings, the side outlet is named last; and in the case of the cross (which is not shown), the side outlet is designated by the letter e.

Fig. I-1 Method of Designating Outlets of Reducing Fittings in Specifications

Copyright ASME International
Provided by IHS under license with ASME
No reproduction or networking permitted without license from IHS
Not for Resale

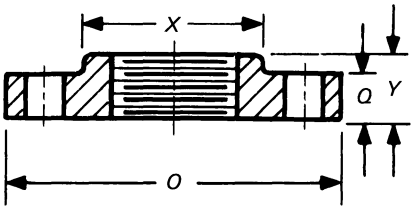

Fig. I-2 Class 25 Flange

Table I-2 Class 25 Flange and Bolting Dimensions

	Flanges				Bolt Holes				
			Hub				Bolting [Note (6)]		
NPS	Diameter, *O*	Thickness, Min., *Q* [Notes (1) and (2)]	Diameter, Min., *X*	Length, Min., *Y*	Diameter of Bolt Circle [Note (3)]	Diameter of Bolt Holes [Notes (3)–(5)]	Number of Bolts	Diameter of Bolts [Note (3)]	Length of Bolts
4	9.00	0.75	5.31	1.31	7.50	3/4	8	5/8	2.50
5	10.00	0.75	6.44	1.44	8.50	3/4	8	5/8	2.50
6	11.00	0.75	7.56	1.56	9.50	3/4	8	5/8	2.50
8	13.50	0.75	9.69	1.75	11.75	3/4	8	5/8	2.50
10	16.00	0.88	11.94	1.94	14.25	3/4	12	5/8	3.00
12	19.00	1.00	14.06	2.19	17.00	3/4	12	5/8	3.00
14	21.00	1.12	15.37	2.25	18.75	7/8	12	3/4	3.50
16	23.50	1.12	17.50	2.50	21.25	7/8	16	3/4	3.50
18	25.00	1.25	19.62	2.69	22.75	7/8	16	3/4	4.00
20	27.50	1.25	21.75	2.88	25.00	7/8	20	3/4	4.00
24	32.00	1.38	26.00	3.25	29.50	7/8	20	3/4	4.00
30	38.75	1.50	...	...	36.00	1	28	7/8	4.50
36	46.00	1.62	...	...	42.75	1	32	7/8	5.00
42	53.00	1.75	...	...	49.50	1 1/8	36	1	5.50
48	59.50	2.00	...	...	56.00	1 1/8	44	1	6.00
54	66.25	2.25	...	...	62.75	1 1/8	44	1	6.50
60	73.00	2.25	...	...	69.25	1 1/4	52	1 1/8	6.50
72	86.50	2.50	...	...	82.50	1 1/4	60	1 1/8	7.00
84	99.75	2.75	...	...	95.50	1 3/8	64	1 1/4	7.50
96	113.25	3.00	...	...	108.50	1 3/8	68	1 1/4	8.00

GENERAL NOTE: Dimensions are in inches.

NOTES:

(1) For facing, see para. 6.2.1.

(2) Threaded companion flanges should not be thinner than the Class 125 thickness on NPS 24 and smaller. Other types of flanges may have thicknesses as given above.

(3) The flange diameter, bolt circle, and number of bolts are the same in Class 25 as in Class 125. Bolt hole diameters of Class 25 shall not be modified when mated with Class 125 flanges or with steel flanges.

(4) For spot facing, see para 6.7.

(5) For flange bolt holes, see para. 6.6.

(6) For bolts and nuts, see para. 7.1.

Copyright ASME International
Provided by IHS under license with ASME
No reproduction or networking permitted without license from IHS
Not for Resale

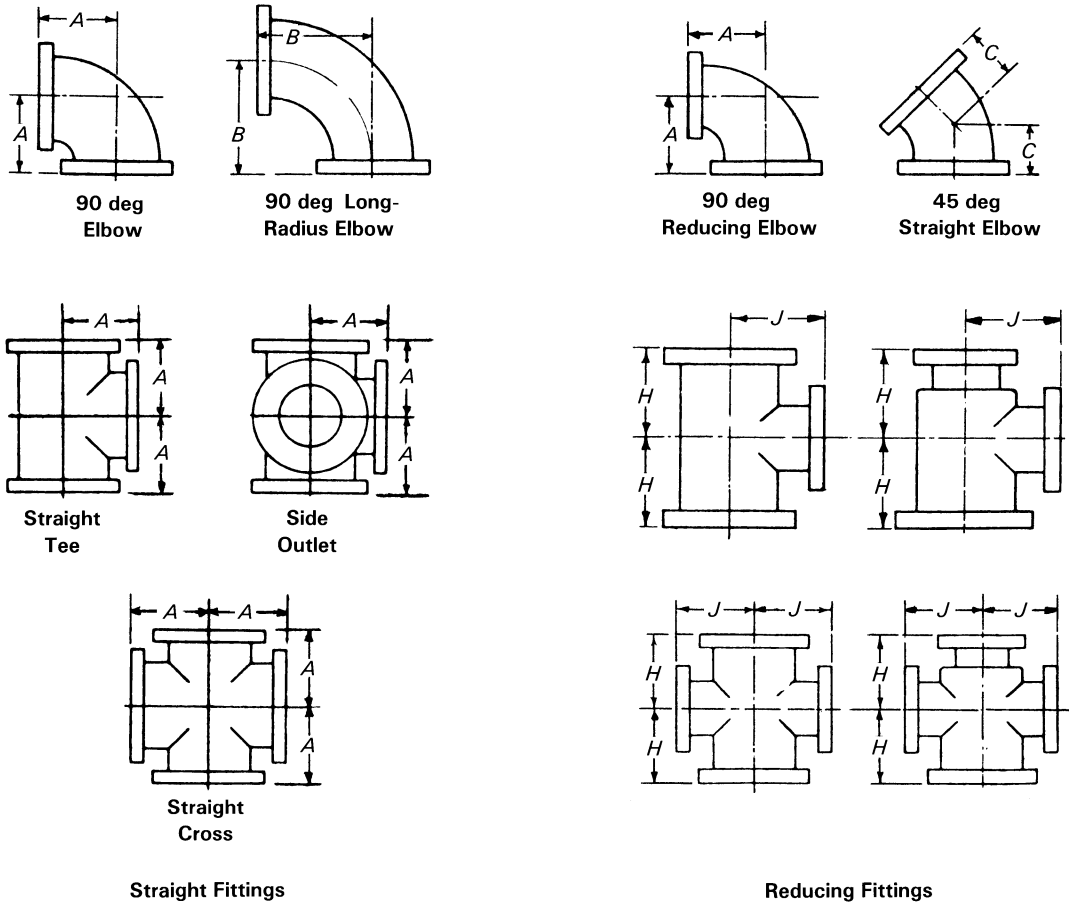

GENERAL NOTE: For dimensions, see Table I-3 on next page.

Fig. I-3 Class 25 Flanged Fittings

Copyright ASME International
Provided by IHS under license with ASME
No reproduction or networking permitted without license from IHS
Not for Resale

Table I-3 Dimensions of Class 25 Gray Iron Flanged Fittings

NPS	General				Straight Size [Note (5)]			Reducing Tees and Crosses (Short-Body Pattern) [Notes (9)–(11)]		
	Diameter of Flange	Thickness of Flange, Min.	Wall Thickness of Body [Note (1)]	Inside Diameter of Fitting	Center-to-Face Elbow, Tee, and Cross, *A* [Notes (2)–(4)]	Center-to-Face Long-Radius Elbow, *B*	Center-to-Face 45 deg Elbow, *C* [Note (6)]	NPS Size of Outlet and Smaller [Notes (7) and (8)]	Center-to-Face Run, *H* [Note (5)]	Center-to-Face Outlet, *J* [Note (5)]
4	9.00	0.75	0.42	4	6.5	9.00	4.0			
5	10.00	0.75	0.44	5	7.5	10.25	4.5			
6	11.00	0.75	0.44	6	8.0	11.50	5.0			
8	13.50	0.75	0.46	8	9.0	14.00	5.5	All reducing fittings NPS 16 and smaller have the same center-to-face dimensions as straight- size fittings.		
10	16.00	0.88	0.50	10	11.0	16.50	6.5			
12	19.00	1.00	0.54	12	12.0	19.00	7.5			
14	21.00	1.12	0.57	14	14.0	21.50	7.5			
16	23.50	1.12	0.60	16	15.0	24.00	8.0			
18	25.00	1.25	0.64	18	16.5	26.50	8.5	12.0	13.0	15.5
20	27.50	1.25	0.67	20	18.0	29.00	9.5	14.0	14.0	17.0
24	32.00	1.38	0.76	24	22.0	34.00	11.0	16.0	15.0	19.0
30	38.75	1.50	0.88	30	25.0	41.50	15.0	20.0	18.0	23.0
36	46.00	1.62	0.99	36	28.0	49.00	18.0	24.0	20.0	26.0
42	53.00	1.75	1.10	42	31.0	56.50	21.0	24.0	23.0	30.0
48	59.50	2.00	1.26	48	34.0	64.00	24.0	30.0	26.0	34.0
54	66.25	2.25	1.35	54	39.0	71.50	27.0	36.0	29.0	37.0
60	73.00	2.25	1.39	60	44.0	79.00	30.0	40.0	33.0	41.0
72	86.50	2.50	1.62	72	53.0	94.00	36.0	48.0	40.0	48.0

GENERAL NOTES:

(a) Dimensions are in inches.
(b) For facing, see para. 6.2.1.
(c) For flange bolt holes, refer to Table 2; see also para. 6.6.
(d) For spot facing, see para. 6.7.
(e) For intersecting centerlines of side outlets, see para. 6.3.1.
(f) The flange diameter, bolt circle, and number of bolts are the same in Class 25 as in Class 125. Bolt hole diameters of Class 25 shall not be modified when mated with Class 125 flanges or with steel flanges.
(g) The center-to-face dimensions of fittings are the same as the Class 125.

NOTES:

(1) For wall thickness tolerance, see para. 6.1.
(2) For center-to-face dimensions of reducing elbows and side-outlet elbows, see paras. 6.3.2(b) and (c).
(3) Tees and crosses, reducing on run only, carry same dimensions center-to-face and face-to-face as a straight-size fitting of the larger opening.
(4) For reinforcement of crosses, see para. 6.8.
(5) For center-to-face tolerances, see para. 6.4.
(6) For center-to-face dimensions of special degree elbows, see para. 6.3.2(d).
(7) Tees, side-outlet tees, and crosses, NPS 16 and smaller, reducing on the outlet, have the same dimensions center-to-face and face-to-face as straight-size fittings, corresponding to the size of the larger opening. NPS 18 and larger, reducing on the outlet, are made in two lengths, depending on the size of the outlet as given in Table I-3.
(8) Long-body patterns are used when outlets are larger than given above and, therefore, have the same dimensions as straight-size fittings.
(9) Fittings reducing on the run only carry same dimensions center-to-face and face-to-face as straight-size fittings, corresponding to the size of the larger opening. Tees increasing on outlet, known as bull-head tees, will have same center-to-face and face-to-face dimensions as a straight fitting of the size of the outlet. For example, an NPS 12 × NPS 12 × NPS 18 tee will be governed by the dimensions of the NPS 18 long-body tee, given in Table I-3, namely NPS $16\frac{1}{2}$ center-to-face of all openings and NPS 33 face-to-face.
(10) Side-outlet tees, with outlet at 90 deg or any other angle, straight or reducing, carry same dimensions center-to-face and face-to-face as regular tees having same reductions.
(11) In a side-outlet tee, the larger of the two side outlets governs the center-to-face dimension *J*.

Copyright ASME International
Provided by IHS under license with ASME
No reproduction or networking permitted without license from IHS
Not for Resale

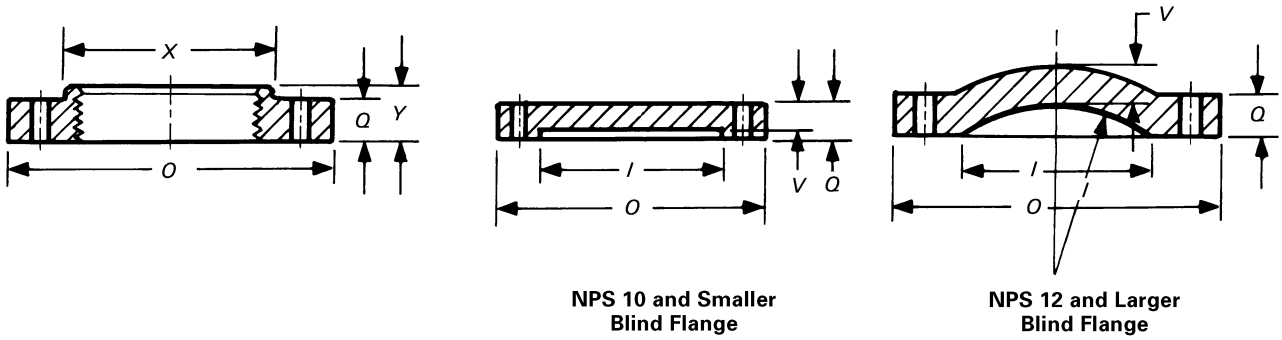

GENERAL NOTE: For dimensions, see Table I-4 on next page.

Fig. I-4 Class 125 Flanges

Copyright ASME International
Provided by IHS under license with ASME
No reproduction or networking permitted without license from IHS
Not for Resale

Table I-4 Class 25 Flange and Bolting Dimensions

NPS	Flanges		Hub		Blind Flanges		Bolt Holes		Bolting			
	Diameter of Flange, *O*	Thickness of Flange, Min., *Q* [Note (1)]	Diameter Min., *X*	Length of Hub and Threads, Min., *Y* [Note (2)]	Diameter of Port, *I* [Note (3)]	Wall Thickness, *V* [Note (4)]	Diameter of Bolt Circle	Diameter of Bolt Holes [Notes (5) and (6)]	Number of Bolts	Diameter of Bolts	Length of Bolts [Notes (7) and (8)]	Length of Bolt Stud With Two Nuts [Note (7)]
1	4.25	0.44	1.94	0.69	1.00	0.38	3.12	5/8	4	1/2	2.00	...
1 1/4	4.62	0.50	2.31	0.81	1.25	0.44	3.50	5/8	4	1/2	2.00	...
1 1/2	5.00	0.56	2.56	0.88	1.50	0.50	3.88	5/8	4	1/2	2.00	...
2	6.00	0.62	3.06	1.00	2.00	0.56	4.75	3/4	4	5/8	2.50	...
2 1/2	7.00	0.69	3.56	1.12	2.50	0.63	5.50	3/4	4	5/8	2.50	...
3	7.50	0.75	4.25	1.19	3.00	0.69	6.00	3/4	4	5/8	2.50	...
3 1/2	8.50	0.81	4.81	1.25	3.50	0.75	7.00	3/4	8	5/8	3.00	...
4	9.00	0.94	5.31	1.31	4.00	0.88	7.50	3/4	8	5/8	3.00	...
5	10.00	0.94	6.44	1.44	5.00	0.88	8.50	7/8	8	3/4	3.00	...
6	11.00	1.00	7.56	1.56	6.00	0.94	9.50	7/8	8	3/4	3.50	...
8	13.50	1.12	9.69	1.75	8.00	1.06	11.75	7/8	8	3/4	3.50	...
10	16.00	1.19	11.94	1.94	10.00	1.12	14.25	1	12	7/8	4.00	...
12	19.00	1.25	14.06	2.19	12.00	0.81	17.00	1	12	7/8	4.00	...
14	21.00	1.38	15.38	2.25	14.00	0.88	18.75	1 1/8	12	1	4.50	...
16	23.50	1.44	17.50	2.50	16.00	1.00	21.25	1 1/8	16	1	4.50	...
18	25.00	1.56	19.62	2.69	18.00	1.06	22.75	1 1/4	16	1 1/8	5.00	...
20	27.50	1.69	21.75	2.88	20.00	1.12	25.00	1 1/4	20	1 1/8	5.00	...
24	32.00	1.88	26.00	3.25	24.00	1.25	29.50	1 3/8	20	1 1/4	5.50	...
30	38.75	2.12	...	...	30.00	1.44	36.00	1 3/8	28	1 1/4	6.50	...
36	46.00	2.38	...	...	36.00	1.62	42.75	1 5/8	32	1 1/2	7.00	9.00
42	53.00	2.62	...	...	42.00	1.81	49.50	1 5/8	36	1 1/2	7.50	9.50
48	59.50	2.75	...	...	48.00	2.00	56.00	1 5/8	44	1 1/2	8.00	9.50
54 (9)	66.25	3.00	...	...	...	...	62.75	2	44	1 3/4	8.50	10.50
60 (9)	73.00	3.12	...	...	...	...	69.25	2	52	1 3/4	9.00	11.00
72 (9)	86.50	3.50	...	...	...	...	82.50	2	60	1 3/4	9.50	11.50
84 (9)	99.75	3.88	...	...	...	...	95.50	2 1/4	64	2	10.50	13.00
96 (9)	113.25	4.25	...	...	...	...	108.50	2 1/2	68	2 1/4	11.50	14.00

GENERAL NOTE: Dimensions are in inches.

NOTES:

(1) For facing, see para. 6.2.1.

(2) For thread of threaded flanges, see paras. 6.5.1 and 6.5.2.

(3) All blind flanges NPS 12 and larger must be dished with inside radius equal to the port diameter.

(4) For wall thickness tolerance, see para. 6.1.

(5) For flange bolt holes, see para. 6.6.

(6) For spot facing, see para. 6.7.

(7) For bolts and nuts, see para. 7.1.

(8) Bolt lengths to be compensated for when bolting steel to cast iron flanges.

(9) NPS 54 through 96 are included for convenience. Pressure–temperature ratings are the user's responsibility.

Copyright ASME International
Provided by IHS under license with ASME
No reproduction or networking permitted without license from IHS
Not for Resale

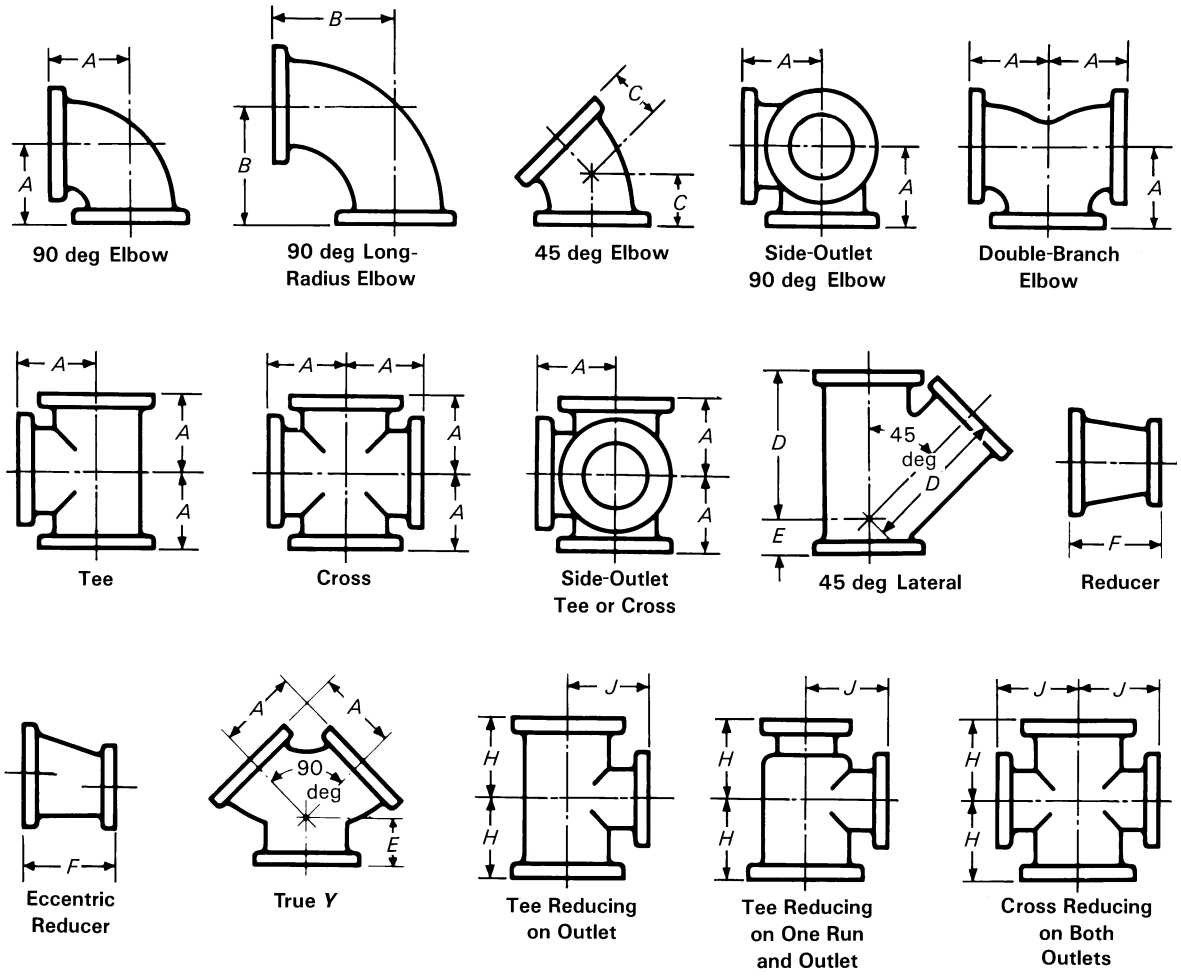

Fig. I-5 Class 125 Flanged Fittings

Copyright ASME International
Provided by IHS under license with ASME
No reproduction or networking permitted without license from IHS
Not for Resale

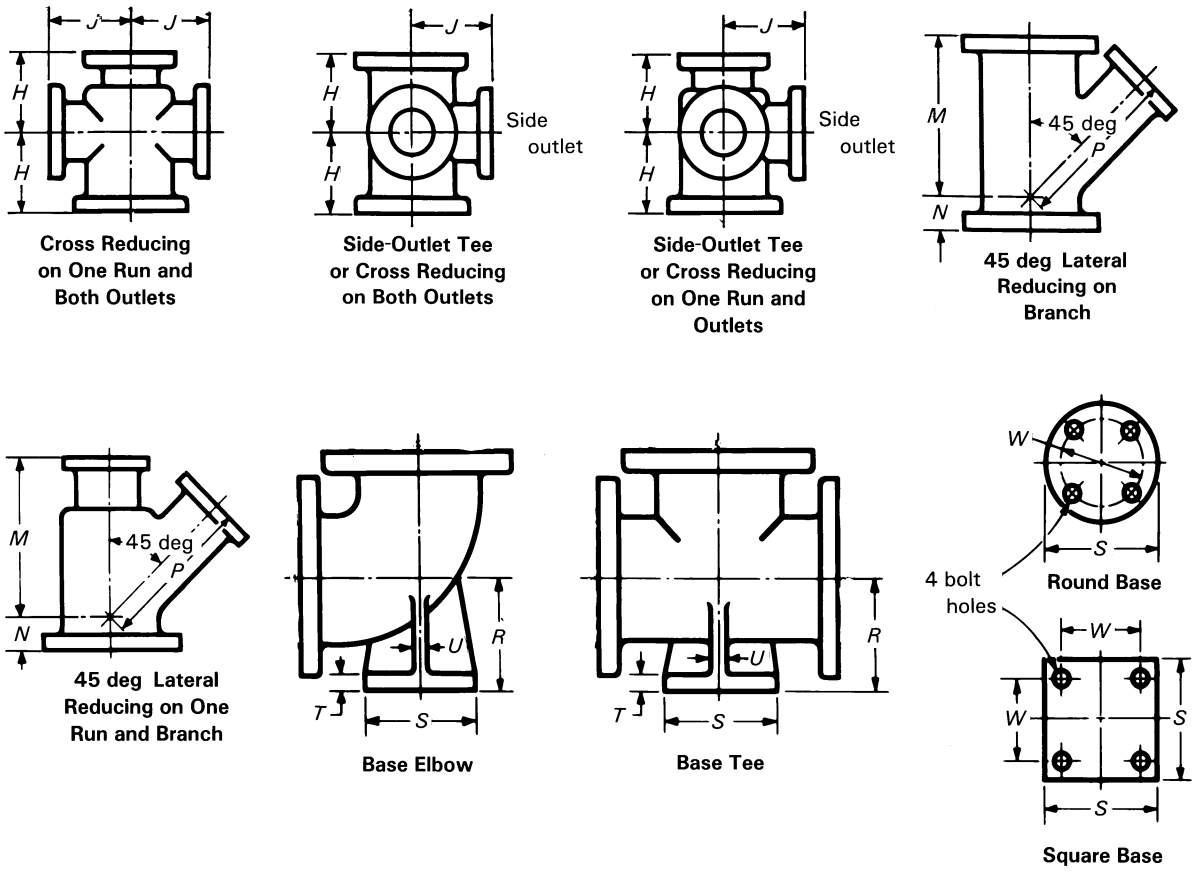

GENERAL NOTE: For dimensions, see Table I-5 on next page.

Fig. I-5 Class 125 Flanged Fittings (Cont'd)

Copyright ASME International
Provided by IHS under license with ASME
No reproduction or networking permitted without license from IHS
Not for Resale

Copyright ASME International
Provided by IHS under license with ASME
No reproduction or networking permitted without license from IHS

Table I-5 Dimensions of Class 125 Gray Iron Flanged Fittings

	Flanges [Notes (1)–(3)]		General		Straight Fittings [Notes (5) and (6)]						Reducing Fittings (Short-Body Patterns) [Notes (11) and (12)] Tees and Crosses [Notes (9), (13), and (14)]		
NPS	Diameter of Flange	Thickness of Flange, Min.	Inside Diameter of Fittings	Wall Thickness [Note (4)]	Center-to-Face 90 deg Elbow, Tees, Crosses, True, *Y*, and Double-Branch Elbow, *A* [Notes (6)–(9)]	Center-to-Face 90 deg Long-Radius Elbow, *B* [Notes (6)–(8)]	Center-to-Face 45 deg Elbow, *C* [Note (8)]	Center-to-Face Lateral, *D* [Note (9)]	Short Center-to-Face True, *Y* and Lateral, *E* [Note (9)]	Face-to-Face Reducer, *F* [Note (10)]	NPS Size of Outlet and Smaller [Notes (6) and (10)]	Center-to-Face Run, *H*	Center-to-Face Outlet or Side Outlet, *J*
1	4.25	0.44	1.00	0.31	3.50	5.00	1.75	5.75	1.75	. . .			
1¼	4.62	0.50	1.25	0.31	3.75	5.50	2.00	6.25	1.75	. . .			
1½	5.00	0.56	1.50	0.31	4.00	6.00	2.25	7.00	2.00	. . .			
2	6.00	0.62	2.00	0.31	4.50	6.50	2.50	8.00	2.50	5.0			
2½	7.00	0.69	2.50	0.31	5.00	7.00	3.00	9.50	2.50	5.5			
3	7.50	0.75	3.00	0.38	5.50	7.75	3.00	10.00	3.00	6.0	All reducing tees and crosses NPS 16 and smaller shall have the same center-to-face dimensions as straight-size fittings, corresponding to the size of the largest opening.		
3½	8.50	0.81	3.50	0.44	6.00	8.50	3.50	11.50	3.00	6.5			
4	9.00	0.94	4.00	0.50	6.50	9.00	4.00	12.00	3.00	7.0			
5	10.00	0.94	5.00	0.50	7.50	10.25	4.50	13.50	3.50	8.0			
6	11.00	1.00	6.00	0.56	8.00	11.50	5.00	14.50	3.50	9.0			
8	13.50	1.12	8.00	0.62	9.00	14.00	5.50	17.50	4.50	11.0			
10	16.00	1.19	10.00	0.75	11.00	16.50	6.50	20.50	5.00	12.0			
12	19.00	1.25	12.00	0.81	12.00	19.00	7.50	24.50	5.50	14.0			
14	21.00	1.38	14.00	0.88	14.00	21.50	7.50	27.00	6.00	16.0			
16	23.50	1.44	16.00	1.00	15.00	24.00	8.00	30.00	6.50	18.0			
18	25.00	1.56	18.00	1.06	16.50	26.50	8.50	32.00	7.00	19.0	12.0	13.0	15.5
20	27.50	1.69	20.00	1.12	18.00	29.00	9.50	35.00	8.00	20.0	14.0	14.0	17.0
24	32.00	1.88	24.00	1.25	22.00	34.00	11.00	40.50	9.00	24.0	16.0	15.0	19.0
30	38.75	2.12	30.00	1.44	25.00	41.50	15.00	49.00	10.00	30.0	20.0	18.0	23.0
36	46.00	2.38	36.00	1.62	28.00	49.00	18.00	. . .	. . .	36.0	24.0	20.0	26.0
42	53.00	2.62	42.00	1.81	31.00	56.50	21.00	. . .	. . .	42.0	24.0	23.0	30.0
48	59.50	2.75	48.00	2.00	34.00	64.00	24.00	. . .	. . .	48.0	30.0	26.0	34.0

Not for Resale

Copyright ASME International
Provided by IHS under license with ASME
No reproduction or networking permitted without license from IHS

Table I-5 Dimensions of Class 125 Gray Iron Flanged Fittings (Cont'd)

	Reducing Fittings (Short-Body Patterns) [Notes (11) and (12)] Laterals [Note (9)]				Base Elbows and Tees [Notes (17)–(19)]						
										Base Drilling	
NPS	NPS Size of Branch and Smaller	Center-to-Face Run, *M*	Center-to-Face Run, *N*	Center-to-Face Branch, *P*	Center-to-Base, *R*	Diameter of Round Base or Width of Square Base, *S* [Notes (15) and (16)]	Thickness of Base, *T*	Thickness of Ribs, *U*	NPS Size of Supporting Pipe for Base	Bolt Circle or Bolt Spacing, *W*	Diameter of Holes
1					3.50	3.50	0.44	0.38	3/4	2.75	5/8
1 1/4					3.62	3.50	0.44	0.38	3/4	2.75	5/8
1 1/2					3.75	4.25	0.44	0.50	1	3.12	5/8
2					4.12	4.62	0.50	0.50	1 1/4	3.50	5/8
2 1/2					4.50	4.62	0.50	0.50	1 1/4	3.50	5/8
3	All reducing laterals NPS 16 and smaller shall have the same center-to-face dimen sions as straight-size fittings, corresponding to the size of the largest opening.				4.88	5.00	0.56	0.50	1 1/2	3.88	5/8
3 1/2					5.25	5.00	0.56	0.50	1 1/2	3.88	5/8
4					5.50	6.00	0.62	0.50	2	4.25	3/4
5					6.25	7.00	0.69	0.62	2 1/2	5.50	3/4
6					7.00	7.00	0.69	0.62	2 1/2	5.50	3/4
8					8.75	9.00	0.94	0.88	4	7.50	3/4
10					9.75	9.00	0.94	0.88	4	7.50	3/4
12					11.25	11.00	1.00	1.00	6	9.50	7/8
14					12.50	11.00	1.00	1.00	6	9.50	7/8
16					13.75	11.00	1.00	1.00	6	9.50	7/8
18	8	25.0	1.0	27.5	15.00	13.50	1.12	1.12	8	11.75	7/8
20	10	27.0	1.0	29.5	16.00	13.50	1.12	1.12	8	11.75	7/8
24	12	31.5	0.5	34.5	18.50	13.50	1.12	1.12	8	11.75	7/8
30	14	39.0	0.0	42.0	...	...	...	...	...	...	...

Not for Resale

Copyright ASME International
Provided by IHS under license with ASME
No reproduction or networking permitted without license from IHS

Table I-5 Dimensions of Class 125 Gray Iron Flanged Fittings (Cont'd)

GENERAL NOTE: Dimensions are in inches.

NOTES:

(1) For facing, see para. 6.2.1.
(2) For flange bolt holes, refer to Table I-4 and para. 6.6.
(3) For spot facing, see para. 6.7.
(4) For wall thickness tolerances, see para. 6.1.
(5) For center-to-face tolerances, see para. 6.4.
(6) For intersecting centerlines of side-outlet fittings, see para. 6.3.1.
(7) For center-to-face dimensions of reducing elbows and side-outlet elbows, see paras. 6.3.2(b) and (c).
(8) For center-to-face dimensions of special degree elbows, see para. 6.3.2(d).
(9) For reinforcement of crosses and laterals, see para. 6.8.
(10) For face-to-face dimensions of reducers and eccentric reducers, see para. 6.3.5.
(11) For center-to-face dimensions of tees and crosses having outlets and laterals having branches larger than given above, see para. 6.3.3(b).
(12) For center-to-face dimensions of tees, crosses, and laterals reducing on run only, see para. 6.3.3(b).
(13) For center-to-face dimensions of tees reducing on both runs, known as bull-head tees, see para. 6.3.3(b).
(14) For center-to-face dimensions of reducing side-outlet tees and crosses having two different size reductions on the outlets, see para. 6.3.3(b).
(15) For reducing fittings, the size and center-to-face dimensions of base are determined by the size of the largest opening of the fitting. In the case of reducing base elbows, orders shall specify whether the base shall be opposite the larger or smaller opening.
(16) Bolt hole template shown for round base is the same as for the flange of the supporting pipe size, except using only four holes in all cases so placed as to straddle centerlines. The bases of these fittings are intended for support in compression and are not to be used for anchors or supports in tension or shear.
(17) Bases are furnished only when specified by the purchaser.
(18) For tees, sizes larger than 24 in., anchorage fittings are recommended. See Table I-8.
(19) The base dimension applies to all straight and reducing sizes.

Not for Resale

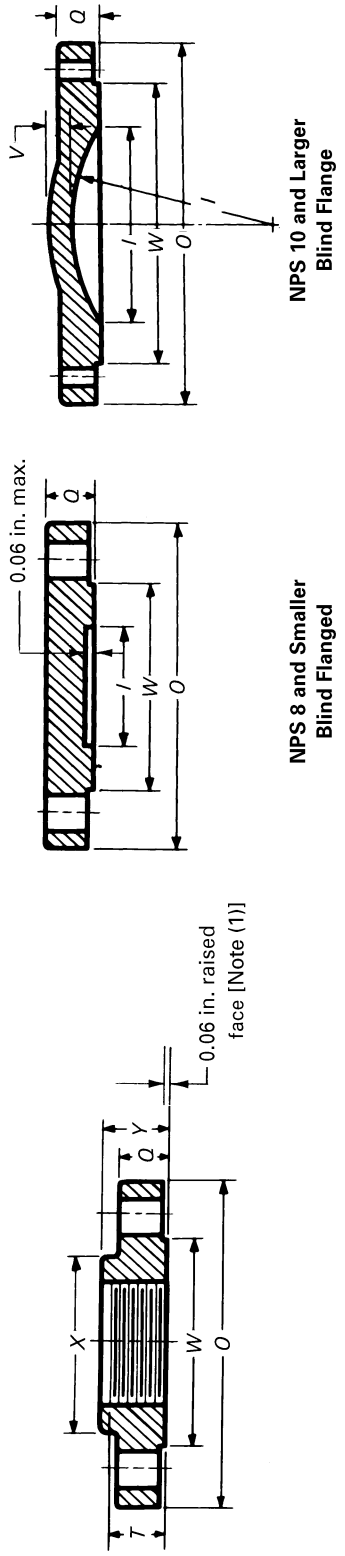

Fig. I-6 Class 250 Flanges

GENERAL NOTE: For dimensions, see Table I-6 on next page.
NOTE:
(1) Diameter of raised face has tolerance of ±0.03 in.

Copyright ASME International
Provided by IHS under license with ASME
No reproduction or networking permitted without license from IHS
Not for Resale

Copyright ASME International
Provided by IHS under license with ASME
No reproduction or networking permitted without license from IHS

Table I-6 Class 250 Flange and Bolting Dimensions

NPS	Flanges: Diameter of Flange, O	Flanges: Thickness of Flange, Min., Q	Flanges: Diameter of Raised Face, W [Note (1)]	Blind Flanges [Note (2)]: Diameter of Port, I	Blind Flanges [Note (2)]: Wall Thickness, V [Note (3)]	Hubs: Diameter of Hub, Min., X	Hubs: Length Through Hub, Min., Y	Hubs: Length of Threads, Min., T [Note (4)]	Bolt Holes: Diameter of Bolt Circle	Bolt Holes: Diameter of Bolt Holes [Note (5)]	Bolting [Note (6)]: Number of Bolts	Bolting [Note (6)]: Diameter of Bolts [Note (7)]	Bolting [Note (6)]: Length of Bolts [Note (8)]	Bolting [Note (6)]: Length of Stud Bolts [Note (8)]
1	4.88	0.69	2.69	1.00	...	2.06	0.88	0.68	3.50	3/4	4	0.62	2.50	...
1 1/4	5.25	0.75	3.06	1.25	...	2.50	1.00	0.81	3.88	3/4	4	0.62	2.50	...
1 1/2	6.12	0.81	3.56	1.50	...	2.75	1.12	0.87	4.50	7/8	4	0.75	3.00	...
2	6.50	0.88	4.19	2.00	...	3.31	1.25	1.00	5.00	3/4	8	0.62	3.00	...
2 1/2	7.50	1.00	4.94	2.50	...	3.94	1.43	1.13	5.88	7/8	8	0.75	3.50	...
3	8.25	1.12	5.69	3.00	...	4.62	1.56	1.19	6.62	7/8	8	0.75	3.50	...
3 1/2	9.00	1.19	6.31	3.50	...	5.25	1.62	1.25	7.25	7/8	8	0.75	3.50	...
4	10.00	1.25	6.94	4.00	...	5.75	1.75	1.31	7.88	7/8	8	0.75	4.00	...
5	11.00	1.38	8.31	5.00	...	7.00	1.88	1.44	9.25	7/8	8	0.75	4.00	...
6	12.50	1.44	9.69	6.00	...	8.12	1.94	1.56	10.62	7/8	12	0.75	4.00	...
8	15.00	1.62	11.94	8.00	...	10.25	2.19	1.75	13.00	1	12	0.88	4.50	...
10	17.50	1.88	14.06	10.00	0.94	12.62	2.38	1.94	15.25	1 1/8	16	1.00	5.50	...
12	20.50	2.00	16.44	12.00	1.00	14.75	2.56	2.19	17.75	1 1/4	16	1.12	5.50	...
14	23.00	2.12	18.94	13.25	1.12	16.25	2.69	2.25	20.25	1 1/4	20	1.12	6.00	...
16	25.50	2.25	21.06	15.25	1.25	18.38	2.88	2.50	22.50	1 3/8	20	1.25	6.50	...
18	28.00	2.38	23.31	17.00	1.38	...	...	...	24.75	1 3/8	24	1.25	6.50	...
20	30.50	2.50	25.56	19.00	1.50	...	...	...	27.00	1 3/8	24	1.25	7.00	...
24	36.00	2.75	30.31	23.00	1.62	...	...	...	32.00	1 5/8	24	1.50	7.50	9.50
30	43.00	3.00	37.19	29.00	2.00	...	...	...	39.25	2	28	1.75	8.50	10.50
36 (9)	50.00	3.38	43.69	...	...	...	...	...	46.00	2 1/4	32	2.00	9.50	12.00
42 (9)	57.00	3.69	50.44	...	...	...	...	...	52.75	2 1/4	36	2.00	10.00	12.50
48 (9)	65.00	4.00	58.44	...	...	...	...	...	60.75	2 1/4	40	2.00	11.00	13.00

GENERAL NOTE: Dimensions are in inches.

NOTES:

(1) For facings, see para. 6.2.2.
(2) All blind flanges for NPS 10 and larger must be dished with inside radius equal to the port diameter.
(3) For wall thickness tolerance, see para. 6.1.
(4) For thread of threaded flanges, see paras. 6.5.1 and 6.5.3.
(5) For flange bolt holes, see para. 6.6.
(6) For bolts and nuts, see para. 7.1.
(7) For spot facing, see para. 6.7.
(8) When bolting to steel flanges, longer bolts or studs shall be used.
(9) Fittings in these sizes are not produced and used in sufficient quantities to warrant standardization; however, the flange dimensions are included for convenience where special fittings larger than NPS 30 are required. When these fittings are made, the body structure should be designed to be the equivalent of the flanges in service pressure ratings.

Not for Resale

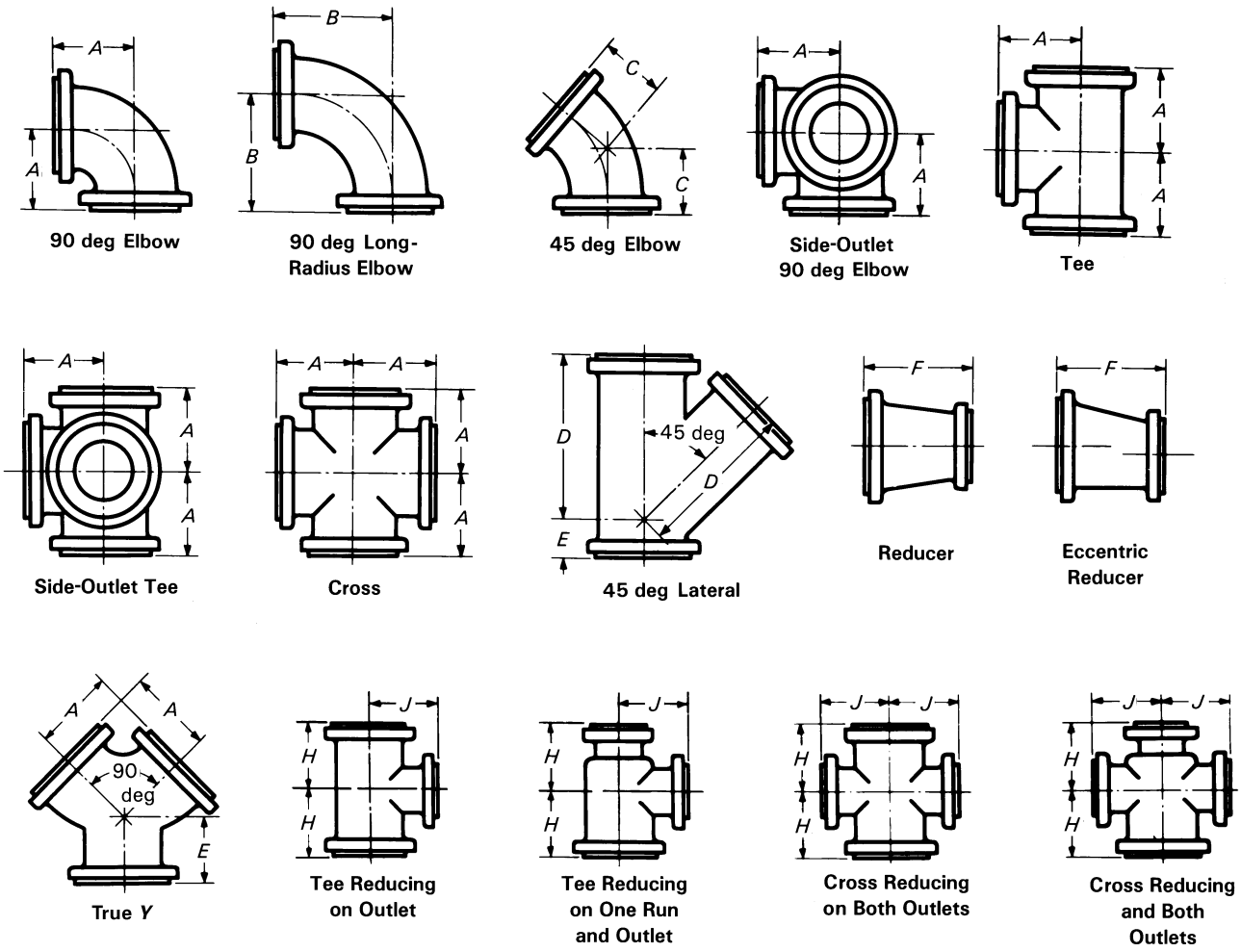

Fig. I-7 Class 250 Flanged Fittings

Copyright ASME International
Provided by IHS under license with ASME
No reproduction or networking permitted without license from IHS
Not for Resale

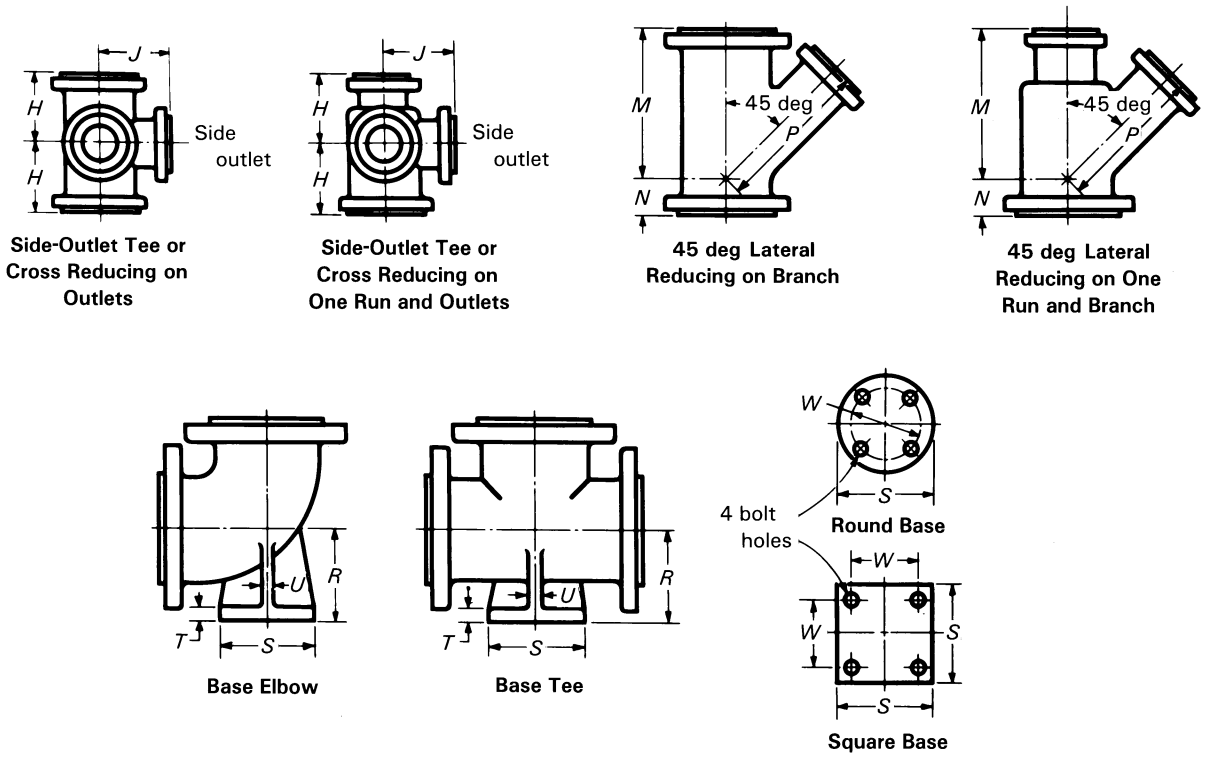

GENERAL NOTE: For dimensions, see Table I-7 on next page.

Fig. I-7 Class 250 Flanged Fittings (Cont'd)

Copyright ASME International
Provided by IHS under license with ASME
No reproduction or networking permitted without license from IHS
Not for Resale

Copyright ASME International
Provided by IHS under license with ASME
No reproduction or networking permitted without license from IHS

Table I-7 Dimensions of Class 250 Gray Iron Flanged Fittings

	Flanges [Notes (1)–(3)]			General Fittings [Notes (5) and (6)]		Straight Fittings [Notes (5) and (6)]						Reducing (Short Body)		
												Tees and Crosses [Notes (10), (13), and (14)]		
NPS	Diameter of Flange	Thickness of Flange, Min., *Q*	Diameter of Raised Face [Note (4)]	Inside Diameter of Fittings	Body Wall Thickness [Note (7)]	Center-to-Face 90 deg Elbow, Tees, Crosses, and True, *Y*, *A* [Notes (8)–(10)]	Center-to-Face 90 deg Long-Radius Elbow, *B* [Notes (6), (8), and (9)]	Center-to-Face 45 deg Elbow, *C* [Note (9)]	Center-to-Face Lateral, *D* [Notes (10) and (11)]	Short Center-to-Face True, *Y* and Lateral, *E* [Notes (10) and (11)]	Face-to-Face Reducer, *F* [Note (12)]	NPS Size of Outlet and Smaller [Notes (6) and (12)]	Center-to-Face Run, *H* [Notes (8) and (9)]	Center-to-Face Outlet or Side Outlet, *J*
1	4.88	0.69	2.69	1.00	0.44	4.00	5.00	2.00	6.50	2.00	. . .			
1¼	5.25	0.75	3.06	1.25	0.44	4.25	5.50	2.50	7.25	2.25	. . .			
1½	6.12	0.81	3.56	1.50	0.44	4.50	6.00	2.75	8.50	2.50	. . .	All reducing tees and crosses NPS 16 and smaller shall have the same center-to-face dimensions as straight-size fittings, corresponding to the size of the largest opening.		
2	6.50	0.88	4.19	2.00	0.44	5.00	6.50	3.00	9.00	2.50	5.0			
2½	7.50	1.00	4.94	2.50	0.50	5.50	7.00	3.50	10.50	2.50	5.5			
3	8.25	1.12	5.69	3.00	0.56	6.00	7.75	3.50	11.00	3.00	6.0			
3½	9.00	1.19	6.31	3.50	0.56	6.50	8.50	4.00	12.50	3.00	6.5			
4	10.00	1.25	6.94	4.00	0.62	7.00	9.00	4.50	13.50	3.00	7.0			
5	11.00	1.38	8.31	5.00	0.69	8.00	10.25	5.00	15.00	3.50	8.0			
6	12.50	1.44	9.69	6.00	0.75	8.50	11.50	5.50	17.50	4.00	9.0			
8	15.00	1.62	11.94	8.00	0.81	10.00	14.00	6.00	20.50	5.00	11.0			
10	17.50	1.88	14.06	10.00	0.94	11.50	16.50	7.00	24.00	5.50	12.0			
12	20.50	2.00	16.44	12.00	1.00	13.00	19.00	8.00	27.50	6.00	14.0			
14	23.00	2.12	18.94	13.25	1.12	15.00	21.50	8.50	31.00	6.50	16.0			
16	25.50	2.25	21.06	15.25	1.25	16.50	24.00	9.50	34.50	7.50	18.0			
18	28.00	2.38	23.31	17.00	1.38	18.00	26.50	10.00	37.50	8.00	19.0	12	14.0	17.0
20	30.50	2.50	25.56	19.00	1.50	19.50	29.00	10.50	40.50	8.50	20.0	14	15.5	18.5
24	36.00	2.75	30.31	23.00	1.62	22.50	34.00	12.00	47.50	10.00	24.0	16	17.0	21.5
30	43.00	3.00	37.19	29.00	2.00	27.50	41.50	15.00	. . .	. . .	30.0	20	20.5	25.5

Not for Resale

Copyright ASME International
Provided by IHS under license with ASME
No reproduction or networking permitted without license from IHS

Table I-7 Dimensions of Class 250 Gray Iron Flanged Fittings (Cont'd)

NPS	Reducing (Short Body) [Notes (11) and (15)] Laterals [Note (10)]				Base, Elbows, and Tees [Notes (17)–(19)]						
	NPS Size of Branch and Smaller	Center-to-Face Run, *M*	Center-to-Face Run, *N*	Center-to-Face Branch, *P*	Center-to-Base, *R*	Diameter of Round Base or Width of Square Base, *S* [Note (16)]	Thickness of Base, *T*	Thickness of Ribs, *U*	NPS Size of Supporting Pipe for Base	Base Drilling [Note (20)] Bolt Circle or Bolt Spacing, *W*	Base Drilling [Note (20)] Diameter of Holes
2					4.50	5.25	0.75	0.50	$1\frac{1}{4}$	3.88	$\frac{3}{4}$
$2\frac{1}{2}$					4.75	5.25	0.75	0.50	$1\frac{1}{4}$	3.88	$\frac{3}{4}$
3					5.25	6.12	0.81	0.62	$1\frac{1}{2}$	4.50	$\frac{7}{8}$
$3\frac{1}{2}$	All reducing laterals NPS 16 and smaller shall have the same center-to-face dimensions as straight-size fittings, corresponding to the size of the largest opening.				5.62	6.12	0.81	0.62	$1\frac{1}{2}$	4.50	$\frac{7}{8}$
4					6.00	6.50	0.88	0.62	2	5.00	$\frac{3}{4}$
5					6.75	7.50	1.00	0.75	$2\frac{1}{2}$	5.88	$\frac{7}{8}$
6					7.50	7.50	1.00	0.75	$2\frac{1}{2}$	5.88	$\frac{7}{8}$
8					9.00	10.00	1.25	0.88	4	7.88	$\frac{7}{8}$
10					10.50	10.00	1.25	0.88	4	7.88	$\frac{7}{8}$
12					12.00	10.50	1.44	1.00	6	10.62	$\frac{7}{8}$
14					13.50	12.50	1.44	1.00	6	10.62	$\frac{7}{8}$
16					14.75	12.50	1.44	1.12	6	10.62	$\frac{7}{8}$
18	8	31	3	32.5	16.25	15.00	1.62	1.12	8	13.00	1
20	10	34	3	36	17.88	15.00	1.62	1.25	8	13.00	1
24	12	41	3	43	20.75	17.50	1.88	1.25	10	15.25	$1\frac{1}{8}$

Not for Resale

Copyright ASME International
Provided by IHS under license with ASME
No reproduction or networking permitted without license from IHS

Table I-7 Dimensions of Class 250 Gray Iron Flanged Fittings (Cont'd)

GENERAL NOTE: Dimensions are in inches.

NOTES:

(1) For facing, see para. 6.2.2.
(2) For flange bolt holes, refer to Table I-6 and para. 6.6.
(3) For spot facing, see para. 6.7.
(4) Tolerance of the diameter of the raised face is equal to ±0.03 in.
(5) For center-to-face tolerances, see para. 6.4.
(6) For intersecting centerlines of side-outlet fittings, see para. 6.3.1.
(7) For wall thickness tolerances, see para. 6.1.
(8) For center-to-face dimensions of reducing elbows and side-outlet elbows, see paras. 6.3.2(b) and (c).
(9) For center-to-face dimensions of special degree elbows, see para. 6.3.2(d).
(10) For reinforcement of crosses and laterals, see para. 6.8.
(11) For center-to-face dimensions of tees and crosses having outlets and laterals having branches larger than given above, see para. 6.3.3(b).
(12) For face-to-face dimensions of reducers and eccentric reducers, see para. 6.3.5.
(13) For center-to-face dimensions of tees reducing on both runs, known as bull-head tees, see para. 6.3.3(c).
(14) For center-to-face dimensions of reducing side-outlet tees and crosses having two different size reductions on the outlet, see para. 6.3.3(b).
(15) For center-to-face dimensions of tees, crosses, and laterals reducing on run only, see para. 6.3.3(b).
(16) For reducing fittings, the size and center-to-face dimensions of base are determined by the size of the largest opening of the fitting. In the case of reducing base elbows, orders shall specify whether the base shall be opposite the larger or smaller opening.
(17) Bases are furnished only when specified by purchaser.
(18) The base dimensions apply to all straight and reducing sizes.
(19) For tees, sizes larger than NPS 24, anchorage fittings are recommended. See Table I-9.
(20) Bolt hole template shown for round base is the same as for the flange of the supporting pipe size, except using only four holes in all cases so placed as to straddle centerlines. The bases of these fittings are intended for support in compression and are not to be used for anchors or supports in tension or shear.

Not for Resale

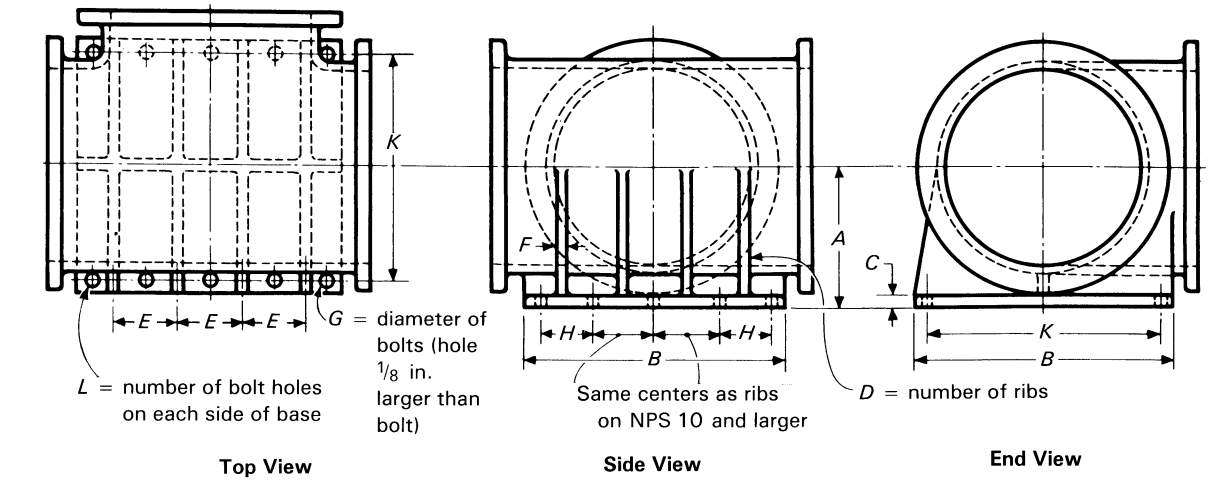

Straight Sizes

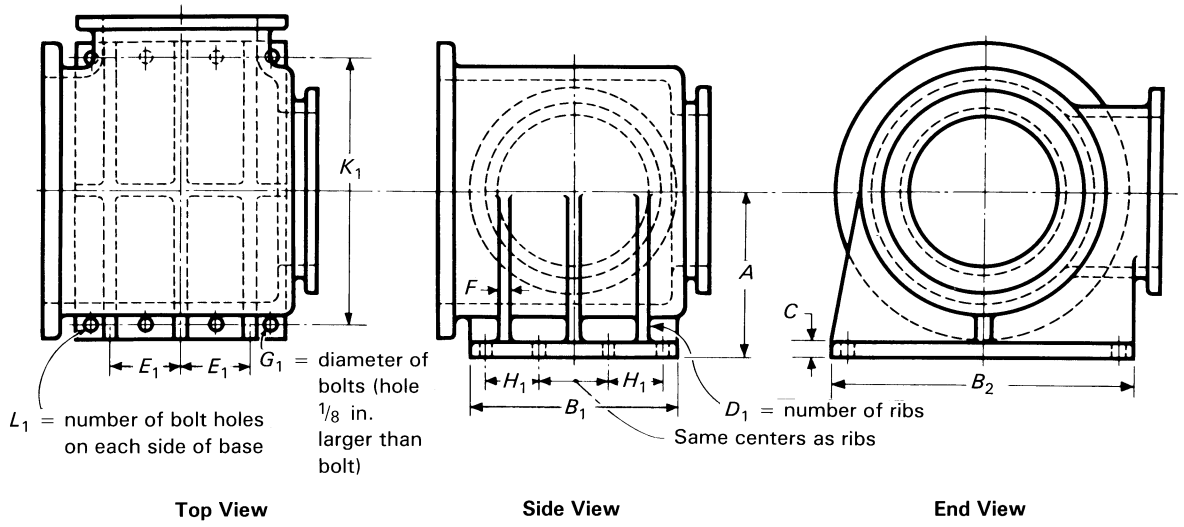

Reducing Sizes, Short Body Pattern

GENERAL NOTE: For dimensions, see Table I-8 on next page.

Fig. I-8 Class 125 Tees (Anchorage Bases)

Copyright ASME International
Provided by IHS under license with ASME
No reproduction or networking permitted without license from IHS
Not for Resale

Table I-8 Dimensions of Anchorage Bases for Straight and Reducing Class 125 Tees

	Common to Both Straight Sizes and Reducing Sizes				Straight Sizes					
NPS	Center-to-Base, *A*	Thickness of Base, *C* [Note (1)]	Diameter of Bolts, *G*	Thickness of Ribs, *F*	Width and Length of Square Base, *B*	Transverse Bolt Centers, *K*	Number of Bolt Holes on Each Side of Base, *L*	Number of Ribs, *D*	Centers of Ribs and Inside Bolt Holes, *E*	Longitudinal Centers From End Bolt to Second End, *H*
2½	4.50	0.69	⅝	0.44	7.00	4.50	2	1	. . .	4.50
3	4.88	0.75	⅝	0.44	7.50	5.00	2	1	. . .	5.00
3½	5.25	0.81	⅝	0.44	8.50	6.00	2	1	. . .	6.00
4	5.50	0.94	⅝	0.50	9.00	6.50	3	2	4.25	3.25
5	6.25	0.94	⅞	0.50	10.00	7.50	3	2	5.00	3.25
6	7.00	1.00	⅞	0.56	11.00	8.75	3	2	6.00	4.38
8	8.38	1.12	1	0.62	13.50	11.00	3	2	8.00	5.50
10	9.25	1.19	1⅛	0.75	16.00	13.38	4	3	4.88	4.25
12	11.25	1.25	1⅛	0.81	19.00	15.50	4	3	5.75	4.88
14	12.50	1.38	1¼	0.88	21.00	17.75	4	3	6.75	5.50
16	13.75	1.44	1⅜	1.00	23.50	19.75	4	3	7.75	6.00
18	15.00	1.56	1⅜	1.06	25.00	21.75	4	3	8.50	6.62
20	16.00	1.69	1½	1.12	27.50	24.00	4	3	9.50	7.25
24	18.50	1.88	1⅝	1.25	32.00	28.38	4	3	11.38	8.50
30	22.00	2.12	1¾	1.44	38.75	34.50	5	4	9.38	7.88
36	25.50	2.38	1⅞	1.62	46.00	40.75	5	4	11.25	9.12
42	29.25	2.62	2	1.81	53.00	46.75	5	4	13.00	10.38
48	32.75	2.75	2¼	2.00	59.50	53.25	5	4	14.88	11.75

Copyright ASME International
Provided by IHS under license with ASME
No reproduction or networking permitted without license from IHS
Not for Resale

Table I-8 Dimensions of Anchorage Bases for Straight and Reducing Class 125 Tees (Cont'd)

Reducing Tees [Notes (1) and (2)] (Short-Body Pattern)									
NPS Outlet Sizes and Smaller	Length of Base, B_1 [Note (1)]	Number of Ribs, D_1	Centers of Ribs, E_1	Diameter of Bolts, G_1	Longitudinal Center From End Bolt to Second Bolt, H_1	Transverse Bolt Centers, K_1	Number of Bolt Holes on Each Side of Base, L_1	Width of Base, B_2	NPS
									$2\frac{1}{2}$
									3
									$3\frac{1}{2}$
									4
									5
		Reducing tee NPS 16 and smaller shall have the same base *B* dimensions as a straight-size tee, corresponding to the size of the largest opening.							6
									8
									10
									12
									14
									16
12	19.00	3	5.25	$1\frac{1}{4}$	5.12	21.50	4	24.75	18
14	21.00	3	6.00	$1\frac{1}{4}$	5.38	23.75	4	26.75	20
16	23.50	3	7.00	$1\frac{3}{8}$	6.25	28.00	4	31.62	24
20	27.50	3	9.00	$1\frac{1}{2}$	7.25	34.25	4	39.00	30
24	32.00	3	10.75	$1\frac{1}{2}$	8.38	41.50	4	46.25	36
24	36.50	4	8.50	$1\frac{5}{8}$	7.50	48.50	5	54.75	42
30	41.75	4	9.75	$1\frac{5}{8}$	8.25	53.75	5	60.00	48

GENERAL NOTES:

(a) Dimensions are in inches.

(b) Bases are furnished only when specified by the purchaser.

(c) For tee dimensions, refer to Table I-5.

NOTES:

(1) For NPS 18 and larger, if the outlet is the same size or smaller than given for reducing tees, the base dimensions shown in this table shall be used. If the outlet is larger than shown for reducing tees, the base dimensions shall be the same as for the straight-size tee, corresponding to the size of the largest opening.

(2) Tees reducing on run only shall have the same base dimensions as straight-size tees, corresponding to the size of the largest opening.

Copyright ASME International
Provided by IHS under license with ASME
No reproduction or networking permitted without license from IHS Not for Resale

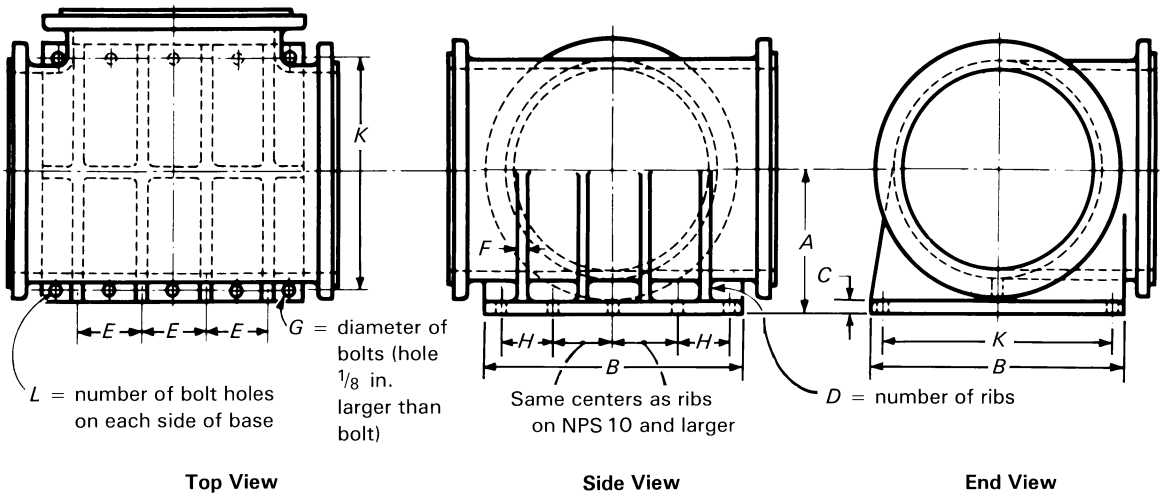

Straight Sizes

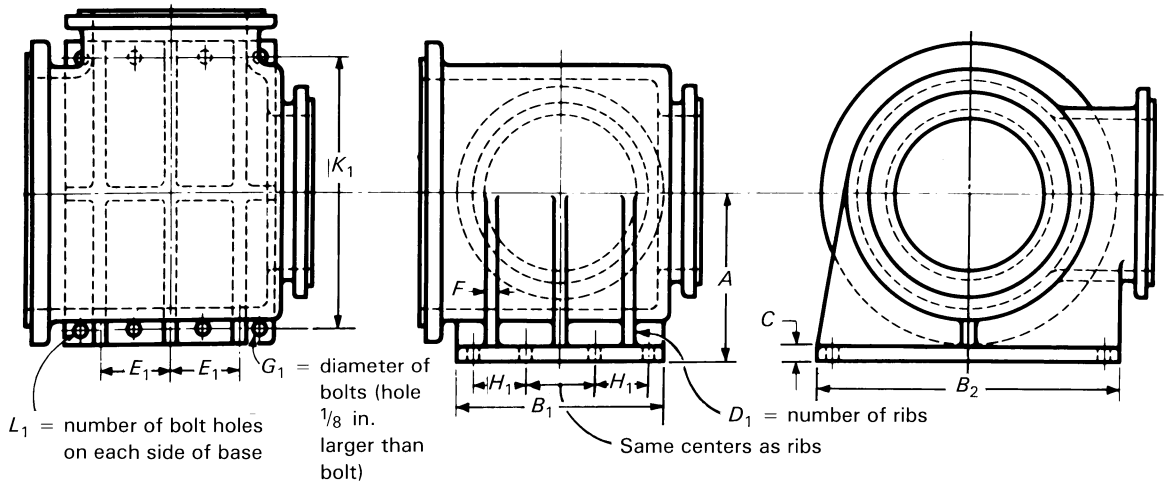

Reducing Sizes, Short Body Pattern

GENERAL NOTE: For dimensions, see Table I-9 on next page.

Fig. I-9 Class 250 Tees (Anchorage Bases)

Copyright ASME International
Provided by IHS under license with ASME
No reproduction or networking permitted without license from IHS
Not for Resale

Copyright ASME International
Provided by IHS under license with ASME
No reproduction or networking permitted without license from IHS

Table I-9 Dimensions of Anchorage Bases for Straight and Reducing Class 250 Tees

	Common on Both Straight Sizes and Reducing Sizes				Straight Sizes						Reducing Sizes (Short-Body Pattern) [Notes (2) and (3)]					
NPS	Center-to-Base, *A*	Thickness of Base, *C* [Notes (1) and (2)]	Diameter of Bolts, *G*	Thickness of Ribs, *F*	Width and Length of Square Base, *B*	Transverse Bolt Centers, *K*	Number of Bolt Holes on Each Side of Base, *L*	Number of Ribs, *D*	Centers of Ribs, *E*	Longitudinal Center From End Bolt to Second Bolt, *H*	NPS Outlet Sizes and Smaller	Length of Base, B_1 [Note (3)]	Centers of Ribs, E_1	Longitudinal Center From End Bolt to Second Bolt, H_1	Transverse Bolt Centers, K_1	Width of Base, B_2
$2\frac{1}{2}$	4.75	0.75	$\frac{5}{8}$	0.56	7.50	5.75	2	1	...	5.75						
3	5.25	0.81	$\frac{5}{8}$	0.56	8.25	6.50	2	1	...	6.50						
$3\frac{1}{2}$	5.62	0.94	$\frac{5}{8}$	0.56	9.00	7.25	2	1	...	7.25						
4	6.00	0.94	$\frac{5}{8}$	0.62	10.00	7.75	3	2	4	3.78						
5	6.75	1.00	$\frac{7}{8}$	0.69	11.00	8.75	3	2	5	4.38						
6	7.50	1.06	$\frac{7}{8}$	0.75	12.50	10.25	3	2	6	5.12	Reducing tee NPS 16 and smaller shall have the same base *B* dimensions as a straight-size tee, corresponding to the size of the largest opening.					
8	9.00	1.12	1	0.81	15.00	12.50	3	2	8	6.25						
10	10.50	1.25	$1\frac{1}{8}$	0.94	17.50	14.75	4	3	5	4.88						
12	12.00	1.25	$1\frac{1}{4}$	1.00	20.50	17.50	4	3	6	5.75						
14	13.50	1.38	$1\frac{1}{4}$	1.12	23.00	20.00	4	3	7	6.50						
16	14.75	1.56	$1\frac{3}{8}$	1.25	25.50	22.00	4	3	8	7.00						
18	16.25	1.69	$1\frac{3}{8}$	1.38	28.00	24.25	4	3	9	7.38	12	20.5	6.50	5.25	24.5	28.25
20	17.88	1.88	$1\frac{1}{2}$	1.50	30.50	26.75	4	3	10	8.38	14	23.0	7.00	6.00	26.5	30.25
24	20.75	2.06	$1\frac{5}{8}$	1.62	36.00	31.75	4	3	12	9.88	16	25.5	8.12	6.69	32.0	36.25
30	24.75	2.31	$1\frac{3}{4}$	2.00	43.00	38.00	5	4	10	9.00	20	30.5	6.62	6.12	38.0	43.00

GENERAL NOTES:

(a) Dimensions are in inches.

(b) For tee dimensions, refer to Table I-7.

NOTES:

(1) Bases are furnished only when specified by the purchaser.

(2) For NPS 18 and larger, if the outlet is the same size or smaller than given for reducing tees, the base dimensions as shown in this Table for reducing tees shall be used. If the outlet is larger than shown for reducing tees, the base dimensions shall be the same as for the straight-size tees, corresponding to the size of the largest opening.

(3) Tees reducing on run only shall have the same base dimensions as straight-size tees, corresponding to the size of the largest opening.

Not for Resale

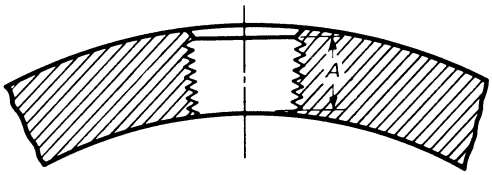

Fig. I-10 Drain Connections

Table I-10 Minimum Thread Length

Tap Size, NPS	Thread Length, *A*, in.
3/8	0.41
1/2	0.53
3/4	0.55
1	0.68
1 1/4	0.71
1 1/2	0.72
2	0.76

Copyright ASME International
Provided by IHS under license with ASME
No reproduction or networking permitted without license from IHS
Not for Resale

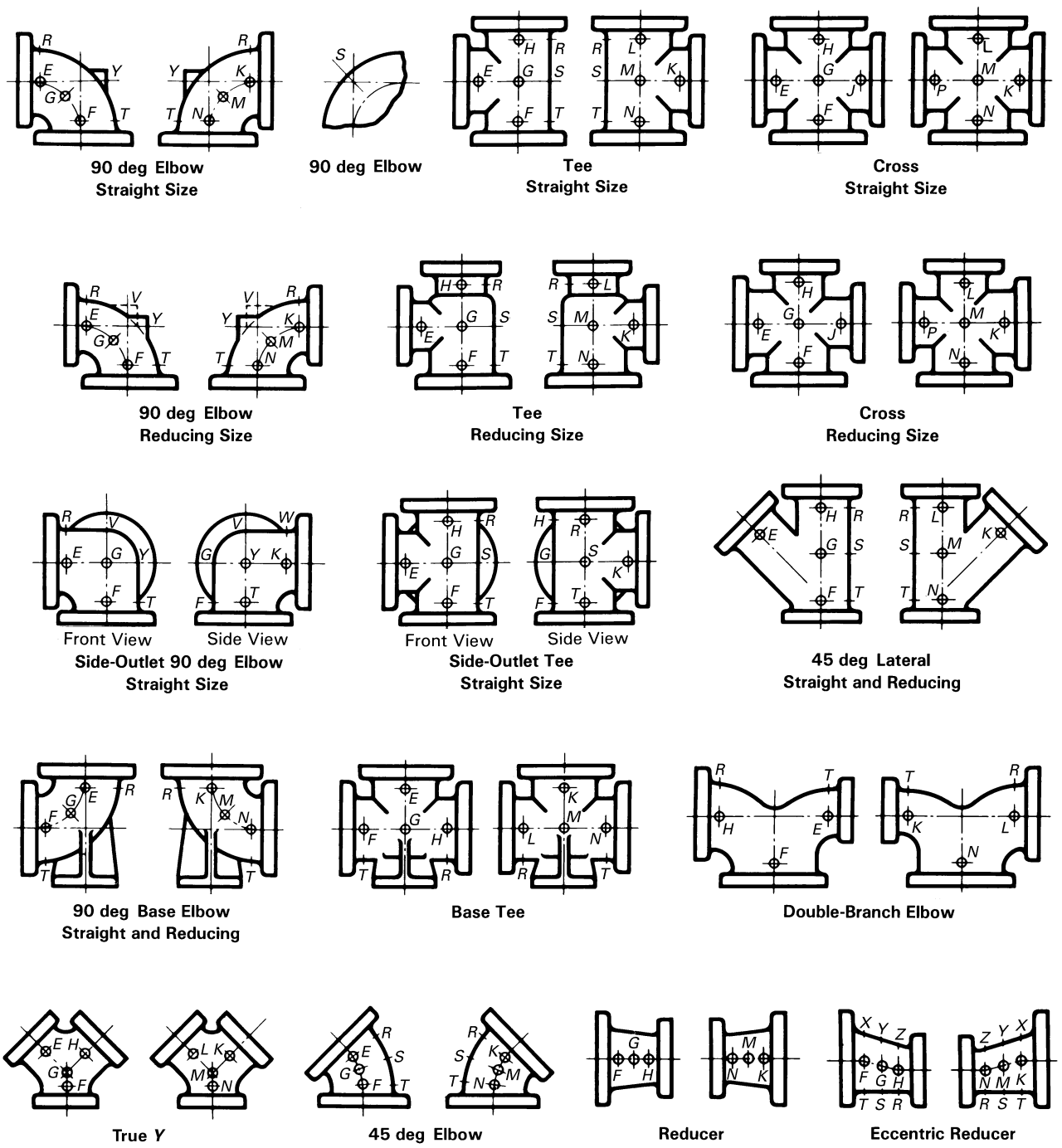

GENERAL NOTE: The above sketches show two views of the same fitting and represent fittings with symmetrical shapes, with the exception of the side-outlet elbow and the side-outlet tee (straight sizes).

Fig. I-11 Method of Designating Location of Tapped Holes for Drains When Specified

Copyright ASME International
Provided by IHS under license with ASME
No reproduction or networking permitted without license from IHS
Not for Resale

MANDATORY APPENDIX II
REFERENCES

The following is a list of publications referenced in this Standard:

ASME B1.1-2003, Unified Inch Screw Threads (UN and UNR Thread Form)[1]

ASME B1.20.1-1983 (R2001), Pipe Threads, General Purpose (Inch)[1]

ASME B16.5-2003, Pipe Flanges and Flanged Fittings: NPS ½ Through NPS 24 Metric/Inch Standard

ASME B16.21-2005, Nonmetallic Flat Gaskets for Pipe Flanges[1]

ASME B18.2.1-1996, Square and Hex Bolts and Screws (Inch Series)[1]

ASME B18.2.2-1987 (R1999), Square and Hex Nuts (Inch Series)[1]

ASME PCC-1-2000, Guidelines for Pressure Boundary Bolted Flange Joint Assembly

American Society of Mechanical Engineers (ASME), Three Park Avenue, New York, NY 10016-5990; Order Department: 22 Law Drive, Box 2300, Fairfield, NJ 07007-2300

ASTM A 126-04, Specification for Gray Iron Castings for Valves, Flanges, and Pipe Fittings

ASTM A 307-04, Specification for Carbon Steel Bolts and Studs, 60,000 psi Tensile Strength

ASTM E 29 Standard Practice for Using Significant Digits in Test Data to Determine Conformance With Specifications

ASTM International (ASTM), 100 Barr Harbor Drive, West Conshohocken, PA 19428

ISO 9001: 2000, Quality Management System – Requirements

International Organization for Standardization (ISO), 1 rue de Varembé, Case Postale 56, CH-1211, Genève 20, Switzerland/Suisse

MSS SP-6-2001, Standard Finishes for Contact Faces of Pipe Flanges and Connecting-End Flanges of Valves and Fittings

MSS SP-9-2001 (R2005), Spot Facing for Bronze, Iron, and Steel Flanges

MSS SP-45-2003, Bypass and Drain Connections

Manufacturers Standardization Society of the Valve and Fittings Industry, Inc. (MSS), 127 Park Street, NE, Vienna, VA 22180

[1] May also be obtained from American National Standards Institute (ANSI), 25 West 43rd Street, New York, NY 10036.

--`,,```,,,,````-`-`,,`,,`,`,,`---

Copyright ASME International
Provided by IHS under license with ASME
No reproduction or networking permitted without license from IHS

Not for Resale

NONMANDATORY APPENDIX A
QUALITY SYSTEM PROGRAM

The products manufactured in accordance with this Standard shall be produced under ISO 9001.[1] A determination of the need for registration and/or certification of the product manufacturer's quality system program by an independent organization shall be the responsibility of the manufacturer. The detailed documentation demonstrating program compliance shall be available to the purchaser at the manufacturer's facility. A written summary description of the program utilized by the product manufacturer shall be available to the purchaser upon request. The product manufacturer is defined as the entity whose name or trademark appears on the product in accordance with the marking or identification requirements of this Standard.

[1] ISO 9001 is also available from the American National Standards Institute (ANSI) and the American Society for Quality (ASQ) as American National Standards that are identified by a prefix "Q" replacing the prefix "ISO." ISO 9001 is listed in Mandatory Appendix II.

Copyright ASME International
Provided by IHS under license with ASME
No reproduction or networking permitted without license from IHS
Not for Resale

--`,,```,,,,````-`-`,,`,,`,`,,`---

Copyright ASME International
Provided by IHS under license with ASME
No reproduction or networking permitted without license from IHS
Not for Resale

B16 AMERICAN NATIONAL STANDARDS FOR PIPING, PIPE FLANGES, FITTINGS, AND VALVES

Scheme for the Identification of Piping Systems A13.1-1996 (R2002)
Pipe Threads, General Purpose (Inch) B1.20.1-1983 (R2001)
Dryseal Pipe Threads (Inch) B1.20.3-1976 (R2003)
Gray Iron Pipe Flanges and Flanged Fittings (Classes 25, 125, and 250) B16.1-2005
Malleable Iron Threaded Fittings: Classes 150 and 300 . . . . . B16.3-1998
Gray Iron Threaded Fittings: Classes 125 and 250 . . . . . B16.4-1998
Pipe Flanges and Flanged Fittings NPS $\frac{1}{2}$ Through NPS 24 Metric/Inch Standard B16.5-2003
Factory-Made Wrought Buttwelding Fittings B16.9-2003
Face-to-Face and End-to-End Dimensions of Valves B16.10-2000 (R2003)
Forged Fittings, Socket-Welding and Threaded B16.11-2005
Cast Iron Threaded Drainage Fittings B16.12-1998
Ferrous Pipe Plugs, Bushings, and Locknuts with Pipe Threads B16.14-1991
Cast Bronze Threaded Fittings: Classes 125 and 250 . . . . . B16.15-1985 (R2004)
Cast Copper Alloy Solder Joint Pressure Fittings B16.18-2001
Metallic Gaskets for Pipe Flanges: Ring-Joint, Spiral-Wound, and Jacketed B16.20-1998 (R2004)
Nonmetallic Flat Gaskets for Pipe Flanges B16.21-2005
Wrought Copper and Copper Alloy Solder Joint Pressure Fittings B16.22-2001
Cast Copper Alloy Solder Joint Drainage Fittings: DWV B16.23-2002
Cast Copper Alloy Pipe Flanges and Flanged Fittings: Class 150, 300, 400, 600, 900, 1500, and 2500 . . . . . B16.24-2001
Buttwelding Ends B16.25-2003
Cast Copper Alloy Fittings for Flared Copper Tubes B16.26-1988
Wrought Steel Buttwelding Short Radius Elbows and Returns B16.28-1994
Wrought Copper and Wrought Copper Alloy Solder Joint Drainage Fittings — DWV B16.29-2001
Manually Operated Metallic Gas Valves for Use in Gas Piping Systems up to 125 PSI (Sizes NPS $\frac{1}{2}$ Through NPS 2) B16.33-2002
Valves — Flanged, Threaded, and Welding End B16.34-2004
Orifice Flanges B16.36-1996
Large Metallic Valves for Gas Distribution (Manually Operated, NPS $2\frac{1}{2}$ to 12, 125 psig Maximum) B16.38-1985 (R2005)
Malleable Iron Threaded Pipe Unions: Classes 150, 250, and 300 . . . . . B16.39-1998
Manually Operated Thermoplastic Gas Shutoffs and Valves in Gas Distribution Systems B16.40-2002
Functional Qualification Requirements for Power Operated Active Valve Assemblies for Nuclear Power Plants B16.41-1983 (R1989)
Ductile Iron Pipe Flanges and Flanged Fittings: Classes 150 and 300 . . . . . B16.42-1998
Manually Operated Metallic Gas Valves for Use in Aboveground Piping Systems Up To 5 PSI B16.44-2002
Cast Iron Fittings for Sovent® Drainage Systems B16.45-1998
Large Diameter Steel Flanges (NPS 26 Through NPS 60) B16.47-1996
Line Blanks B16.48-2005
Factory-Made Wrought Steel Buttwelding Induction Bends for Transportation and Distribution Systems B16.49-2000
Wrought Copper and Copper Alloy Braze-Joint Pressure Fittings B16.50-2001
Power Piping B31.1-2004
Fuel Gas Piping B31.2-1968
Process Piping B31.3-2004
Pipeline Transportation Systems for Liquid Hydrocarbons and Other Liquids B31.4-2002
Refrigeration Piping and Heat Transfer Components B31.5-2001
Gas Transmission and Distribution Piping Systems B31.8-2003
Building Services Piping B31.9-2004
Slurry Transportation Piping Systems B31.11-2002
Manual for Determining the Remaining Strength of Corroded Pipelines B31G-1991 (R2004)
Welded and Seamless Wrought Steel Pipe B36.10M-2004
Stainless Steel Pipe B36.19M-2004
Self-Operated and Power-Operated Safety-Related Valves Functional Specification Standard N278.1-1975 (R1992)

The ASME Publications Catalog shows a complete list of all the Standards published by the Society. For a complimentary catalog, or the latest information about our publications, call 1-800-THE-ASME (1-800-843-2763).

Copyright ASME International
Provided by IHS under license with ASME
No reproduction or networking permitted without license from IHS
Not for Resale

ASME B16.1-2005

ISBN 0-7918-2994-4





J01705

Copyright ASME International
Provided by IHS under license with ASME
No reproduction or networking permitted without license from IHS

Not for Resale