STD.ASME B15.1-ENGL 2000 0759670 0618523 709



The American Society of Mechanical Engineers

SAFETY STANDARD FOR MECHANICAL POWER TRANSMISSION APPARATUS

AN AMERICAN NATIONAL STANDARD

ASME B15.1-2000

(Revision of ASME B15.1-1996)

Copyright ASME International
Provided by IHS under license with ASME
No reproduction or networking permitted without license from IHS
Not for Resale

The American Society of Mechanical Engineers

AN AMERICAN NATIONAL STANDARD

SAFETY STANDARD FOR MECHANICAL POWER TRANSMISSION APPARATUS

ASME B15.1-2000
(Revision of ASME B15.1-1998)

Copyright ASME International
Provided by IHS under license with ASME
No reproduction or networking permitted without license from IHS
Not for Resale

Date of Issuance: September 18, 2000

The 2000 edition of this Standard is being issued with an automatic addenda subscription service. The use of addenda allows revisions made in response to public review comments or committee actions to be published on a regular yearly basis; revisions published in addenda will become effective 1 year after the Date of Issuance of the addenda. The next edition of this Standard is scheduled for publication in 2003.

ASME issues written replies to inquiries concerning interpretations of technical aspects of this Standard. The interpretations will be included with the above addenda service.

ASME is the registered trademark of The American Society of Mechanical Engineers.

This code or standard was developed under procedures accredited as meeting the criteria for American National Standards. The Standards Committee that approved the code or standard was balanced to assure that individuals from competent and concerned interests have had an opportunity to participate. The proposed code or standard was made available for public review and comment that provides an opportunity for additional public input from industry, academia, regulatory agencies, and the public-at-large.

ASME does not "approve," "rate," or "endorse" any item, construction, proprietary device, or activity.

ASME does not take any position with respect to the validity of any patent rights asserted in connection with any items mentioned in this document, and does not undertake to insure anyone utilizing a standard against liability for infringement of any applicable letters patent, nor assume any such liability. Users of a code or standard are expressly advised that determination of the validity of any such patent rights, and the risk of infringement of such rights, is entirely their own responsibility.

Participation by federal agency representative(s) or person(s) affiliated with industry is not to be interpreted as government or industry endorsement of this code or standard.

ASME accepts responsibility for only those interpretations of this document issued in accordance with the established ASME procedures and policies, which precludes the issuance of interpretations by individuals.

No part of this document may be reproduced in any form,
in an electronic retrieval system or otherwise,
without the prior written permission of the publisher.

The American Society of Mechanical Engineers
Three Park Avenue, New York, NY 10016-5990

Copyright © 2000 by
THE AMERICAN SOCIETY OF MECHANICAL ENGINEERS
All Rights Reserved
Printed in U.S.A.

Copyright ASME International
Provided by IHS under license with ASME
No reproduction or networking permitted without license from IHS

Not for Resale

FOREWORD (00)

This Safety Standard for mechanical power transmission apparatus is the most universally applicable standard concerned with safeguarding mechanical equipment. Few machines can operate without some mechanical linkage somewhere between the energy source and point of operation.

The first edition of the B15 standard was approved in 1927 and reaffirmed in 1935. The second edition was approved in the 1953 revision and reaffirmed in 1958. The third edition was approved in 1972 and had departed from the format of previous editions in defining specific areas of responsibility and in establishing performance requirements for the types of safeguarding that apply to mechanical power transmission apparatus. The fourth edition was approved in 1984 followed by an Addenda which was approved in 1986. The fifth edition was approved in 1992 followed by an (a) Addenda that was approved in 1994 and (b) Addenda that was approved in 1995. The sixth edition was approved in 1996 followed by an (a) Addenda that was approved in 1997 and (b) Addenda that was approved in 1998.

The purpose of this Standard is to provide guidance for minimizing the likelihood that people will incur injury when in the proximity of mechanical power transmission apparatus. This Standard is presented in a "performance" mode rather than a "specification" mode to encourage the appropriate use of ingenuity and imagination in achieving a maximum degree of safeguarding. As written, the left-hand column contains the requirements of this Standard, and the right-hand column (Explanatory Information) contains advisory and illustrative material which is not a part of this Standard, but supports the intent of this Standard.

Good judgment is encouraged to be used with this Standard in matters where safe practice and safety are involved. It is also recognized that an appropriate attitude regarding safety can be beneficial in the avoidance of injury.

Safety codes and standards are intended to enhance public health and safety. Revisions result from Committee consideration of factors such as technological advances, new data, and changing environmental and industry needs. Revisions do not imply that previous editions were inadequate.

The values stated within the Standard are in both SI and U.S. customary units, with the latter placed in parentheses. These units are noninterchangeable and, depending on the country, as well as industry preferences, the user will determine which values are to be regarded as the standard.

This Standard was approved by the B15 Committee and by the ASME and designated as an American National Standard by the American National Standard Institute on August 2, 2000.

Copyright ASME International
Provided by IHS under license with ASME
No reproduction or networking permitted without license from IHS
Not for Resale

ASME COMMITTEE B15
Safety Standard for Mechanical Power Transmission Apparatus

(The following is the roster of the Committee at the time of approval of this Standard.)

OFFICERS

V. D. Petershack, *Chair*
D. F. Coble, *Vice Chair*
J. Pang, *Secretary*

COMMITTEE PERSONNEL

L. R. Berke, Safety Solutions of Minnesota
T. F. Bresnahan, The American Society of Safety Engineers
C. A. Carlsson, AMT
D. R. Cloutier, Cincinnati, Inc.
D. F. Coble, US Healthworks
P. R. Frenier, Travelers Insurance Co.
A. V. Karvelis, Ph.D., Packer Engineering, Inc.
W. T. Koch, HJ Heinz Co.
C. M. Osteen, International Paper
J. Pang, The American Society of Mechanical Engineers
R. W. Parry, Consultant
V. D. Petershack, Hitachi Maxco Ltd.
R. A. Reinfried, Conveyor Equipment Manufacturers Association
R. F. Sauger, U.S. Department of Labor-OSHA
F. A. Smith, Jr., *Alternate,* U.S. Department of Labor-OSHA

Previous page is blank.

Copyright ASME International
Provided by IHS under license with ASME
No reproduction or networking permitted without license from IHS
Not for Resale

CONTENTS

Foreword iii
Committee Roster v
Summary of Changes ix

1 Scope, Purpose, Application, and Effective Date 1

2 Definitions 3

3 Safeguarding of Hazards 4

4 Safety Labels and Signs 6

Figures
1 Rotating Motion 7
2 Rotating Motion 7
3 Rotating Motion 7
4 Rotating / Reciprocating Motion 7
5 Rotating Motion 7
6 Rotating Motion 7
7 Rotating Motion 8
8 Rotating Motion 8
9 Rotating Motion 8
10 Rotating/Reciprocating Motion 8
11 Rotating/Reciprocating Motion 8
E12 Recommended Safeguarding Dimensions 9
E13 Articulate Probe 11

Table
E1 Horizontal Distances Required From a Barrier to a Hazard 10

Mandatory Appendix
I Preparation of Technical Inquiries to the B15 Committee 13

Previous page is blank.

Copyright ASME International
Provided by IHS under license with ASME
No reproduction or networking permitted without license from IHS
Not for Resale

ASME B15.1-2000
SUMMARY OF CHANGES

The 2000 edition of ASME B15.1 includes changes, revisions, and corrections introduced in B15.1a-1997 and B15.1b-1998 as well as those listed below, identified on the pages by a margin note, **(00)**.

Page	*Location*	*Change*
iii	Foreword	Second paragragh revised
5	E3.2.1(a)	Both cross-references revised
	E3.2.3(c)	Both cross-references revised
9	Fig. E12	Fig. 12 redesignated as Fig. E12
10	Table E1	Fig. 13 redesignated as Table E1
11	Fig. E13	Fig. 14 redesignated at Fig. E13

SPECIAL NOTE:

The interpretations to ASME B15.1 are included as a separate section for the user's convenience.

Previous page is blank.

Copyright ASME International
Provided by IHS under license with ASME
No reproduction or networking permitted without license from IHS
Not for Resale

SAFETY STANDARD FOR MECHANICAL POWER TRANSMISSION APPARATUS

Standard Requirements	Explanatory Notes[1]

1 SCOPE, PURPOSE, APPLICATION, AND EFFECTIVE DATE

1.1 Scope

The requirements of this Standard apply to any source of hazard to people from the operation of mechanical power transmission apparatus on machines, equipment, or systems that are stationary in their use, other than the point of operation. This Standard applies to the sources of mechanical power, and also to pulleys, gears, and other mechanical components used to transmit power to the point of operation. Where other standards take precedence by specific reference to power transmission apparatus, this B15.1 Standard shall not apply.

E1.1 Scope

Hazards to people pertain to the rotating, oscillating, reciprocating, transversing, or other motions associated with equipment used in the mechanical transmission of power (see Figs. 1 through 11).

See ANSI B11, *Standards on Safety Requirements for Construction, Care, and Use of Machine Tools*, for "machine tools" point of operation and related workzone safe practices.

This Standard does not apply to mobile equipment. "Stationary in their use" also includes mechanical power transmission apparatus that is mounted on, part of, or attached to equipment which is capable of being moved when the mechanical power transmission apparatus is not performing its function.

This Standard does not apply to lift trucks, transit concrete mixers, and other similar pieces of mobile equipment.

1.2 Purpose

The purpose of this Standard is to provide requirements for use in developing effective safeguarding methods to protect people from injury due to inadvertent contact with mechanical power transmission apparatus. When specific safeguarding methods are listed, they are based on sound safety practices; however, alternatives that provide equivalent protection are acceptable. The use of personal protective equipment is recommended, where applicable, but its use does not negate provisions of this Standard.

[1] This is explanatory material and not a part of the B15.1 Standard.

Copyright ASME International
Provided by IHS under license with ASME
No reproduction or networking permitted without license from IHS
Not for Resale

Standard Requirements	Explanatory Notes
1.3 Application — General Requirements	**E1.3 Application — General Requirements**
People having access to areas where motion hazards exist shall be protected, by safeguarding means, from contact with moving parts (mechanisms). Such safeguarding means shall prevent people from walking into, reaching over or under, or other inadvertent contacts.	It is understood that in the application of this Standard, there are responsibilities incumbent upon the owner, the manufacturer, the installer, the operator, and the user of the power transmission apparatus. Some safeguarding features are incorporated into the design of the equipment. Some protection depends upon the installation of safeguarding features after assembly of all the associated components in the field. Other safeguarding features are a part of a building or structure and are not an integral part of the components themselves. Some protection depends upon the operator and maintenance by the user, and some protection depends upon training and supervision.
Where breakage of a machine component can result in injury, provision shall be made for appropriate containment of said components.	When part breakage will result in fragments being propelled, the guard material should be solid, not mesh.
When mechanical power transmission apparatus is stopped for servicing purposes, the starting devices, prime movers, or powered accessories shall be locked or tagged out, in accordance with a generalized procedure, to protect all persons or groups exposed to the mechanical power transmission apparatus from an unexpected start.	Refer to ANSI Z244.1-1982 (R1993), *Safety Requirements for the Lock Out/Tag Out of Energy Sources* and to OSHA 29 CFR 1910.147, *The Control of Hazardous Energy (Lockout/Tagout).*
1.3.1 Exception — Low Energy. Certain power transmission apparatus may lack sufficient energy to create a hazard, and therefore safeguarding may not be required.	**E1.3.1 Exception — Low Energy.** A study should be made to substantiate the lack of need for safeguarding. Factors to be considered in making this determination include, but are not limited to, such considerations as speed in radians per second (surface ft per min), diameter of rotating part, smoothness versus roughness of surface, tension of belts, and forces/power involved.
1.3.2 Exceptions — Service/Maintenance. When a safeguard must be bypassed during startup, setup, repair, adjustment, or maintenance, a program to control the unexpected energization of mechanical power transmission apparatus shall be implemented. This program shall be in writing and shall include proper procedures and adequate training of personnel. During testing and positioning of mechanical power transmission apparatus, special procedures shall be implemented and only properly trained and authorized personnel shall be allowed access to a hazard area.	**E1.3.2 Exceptions — Service/Maintenance.** Those personnel involved in these activities should be appropriately trained and should be provided with appropriate tools and safety equipment. To reduce the chance of injury when safeguards must be bypassed, special procedures and/or equipment for performing this work should be developed and utilized (e.g., lockout, special controls, and/or similar devices, etc.).

Copyright ASME International
Provided by IHS under license with ASME
No reproduction or networking permitted without license from IHS
Not for Resale

Standard Requirements

Explanatory Notes

1.4 Effective Date

The effective date of this Standard for the applicable equipment cited in it shall be 1 year after its date of issuance.

E1.4 Effective Date

It is not the intent of this Standard to require retrofitting of existing equipment. However, when equipment or the installation is being modified, its performance requirement should be reviewed relative to the current standard. If the performance differs substantially, the need to meet the current requirement should be evaluated.

2 DEFINITIONS

E2 DEFINITIONS

belt: a continuous band or series of links of belting material for transferring motion or power from one wheel, pulley, or shaft to another.

chain: a series of links joined together to form a medium for transmitting motion or power from one sprocket or wheel to another.

gear: a toothed machine element used to transmit motion without the use of a belt or chain.

inadvertent contact: when a person touches or otherwise contacts mechanical power transmission apparatus accidentally.

mechanical power transmission apparatus: the mechanical components that, together with a source of power, provide the motion to an element of a machine or equipment.

mobile: capable of moving or being moved readily from one place to another.

motion hazards: hazards created by movement of components of power transmission apparatus either by themselves or in relation to other components or fixed structures.

nip point: a point at which a machine element moving in line meets a rotating element in such a manner that it is possible to nip, pinch, squeeze, or entrap a person or objects coming into contact with one of the two members. This definition holds for the similar point with respect to two rotating parts or two converging parts in linear movement.

pinch point: any location at which it is possible for a part of the body to be caught between the moving mechanical power transmission apparatus components and parts of the machine or auxiliary equipment. It is a location where insertion can cause a pinch or squeeze action to the body part.

pinch point: as used in this Standard, refers only to hazards that may exist as a part of mechanical power transmission apparatus and/or auxiliary components and equipment.

Copyright ASME International
Provided by IHS under license with ASME
No reproduction or networking permitted without license from IHS

Not for Resale

Standard Requirements

Explanatory Notes

point of operation: point at which cutting, forming, or other functional change is accomplished upon the processed material.

prime mover: the primary source of power.

pulley: a flat, grooved, or toothed wheel mounted on a shaft, used in the transmission of motion in conjunction with one or more power transmission belts.

safeguard: protection provided to people from a hazard by a guard, device, safe distance, or safe location.

safety markings: those visual alerts applied to power transmission apparatus through color-coded usage, with or without signs, to denote a hazard.

shall: to be understood as mandatory.

shear point: other than the point of operation, the immediate area where two or more machine elements pass in close contact, creating a shearing action. The elements may be in any form of motion or one may be at rest.

should: to be understood as advisory.

snag: to catch on a rough, sharp, or jagged projecting part.

speed: a measurement of length of belt, chain, cable, or other linkage which has passed a fixed point within a given time. It is usually expressed in terms of meters per second (ft per min). For rotating elements, speed may be expressed in radians per second (revolutions per min) or in surface meters per second (surface ft per min).

stationary: fixed in a station, course, or mode.

3 SAFEGUARDING OF HAZARDS

E3 SAFEGUARDING OF HAZARDS

3.1 General Requirements

All motion hazards associated with the operation of mechanical power transmission apparatus shall be eliminated by design of the equipment or protection by a guard, device, safe distance, or safe location.

Employees shall not wear such clothing, jewelry, or unrestrained hair styles as will be hazardous to their personal safety.

E3.1 General Requirements

Where possible, sources of motion should be located within the structure of the machine, equipment, or system. When elimination of a hazard by design is not possible, the hazard should be safeguarded.

When there are moving parts such as rotating shafting, cutters, tables, etc., present, particular attention should be given to loose clothing, neckties, finger rings, necklaces, watchbands, and unrestrained hair including beards, goatees, and mustaches, etc.

Copyright ASME International
Provided by IHS under license with ASME
No reproduction or networking permitted without license from IHS

Not for Resale

Standard Requirements	Explanatory Notes
3.2 Types of Safeguards	**E3.2 Types of Safeguards**
3.2.1 Guards. All motion hazard guards shall meet the following requirements. *(a)* They shall prevent entry of hands, fingers, or other parts of the body into a point of hazard by reaching through, over, under, or around the guard. *(b)* They shall, in themselves, create no additional motion hazards between the guard and the moving parts. *(c)* They shall utilize fasteners not readily removable by people other than authorized persons. *(d)* If openings are provided for lubrication, adjustment, or inspection, they shall not cause any additional hazards. *(e)* The safeguarding shall prevent injury from breakage of any of the component parts.	**E3.2.1 Guards** *(a)* Anthropometric studies indicate that conformance with dimensions shown in the chart of Fig. E12, or use of the probe shown in Fig. E13, should achieve the desired degree of safety. (00) *(c)* Only fasteners requiring the use of hand tools for removal should be used.
3.2.2 Devices *(a)* A motion hazard safeguarding device shall provide protection to people by: *(1)* preventing and/or stopping normal motion of the mechanical power transmission source of hazard if people enter the hazardous area. *(2)* providing the means to stop the system in the event of involvement with the hazard. *(b)* Emergency stop controls and/or warning signals shall not be used in lieu of guards or other positive safeguarding devices.	**E3.2.2 Devices** *(1)* Presence-sensing mechanisms and interlocked gates, properly interfaced with the sources of power, are examples of this type of device. Appropriate consideration should be given to the stop time of the system once the device has been activated. *(2)* Emergency pull cords, body bars, and/or other means to stop the system are examples of this type of device.
3.2.3 Safe Distance. Guarding by safe distance shall be accomplished by the following methods: *(a)* vertical distance of sufficient height above the floor or other walking or working surface *(b)* horizontal distance *(c)* the combination of vertical and horizontal distance	**E3.2.3 Safe Distance** *(a)* The mechanical power transmission apparatus should be at least 2,440 mm (96 in.) above the surface to be considered as safeguarded by safe vertical distance (or location). *(b)* A horizontal distance which precludes contact with the motion hazard meets the intent of this requirement. *(c)* The combination of horizontal and vertical distances to provide safe distance protection is shown in Table E1. The vertical barrier will be solid unless barrier openings meet the provisions shown in Fig. E13. (00)

Copyright ASME International
Provided by IHS under license with ASME
No reproduction or networking permitted without license from IHS
Not for Resale

Standard Requirements	Explanatory Notes
3.2.4 Safe Location. Safeguarding by location can be accomplished by: *(a)* location in a room, vault, or similar enclosure. *(b)* permanent, substantial partitions or screens. Any openings in such partitions or screens shall be so sized and located that persons cannot come into accidental contact with the hazardous moving parts. *(c)* location on an elevated platform where persons cannot come into accidental contact with the hazardous moving parts.	**E3.2.4 Safe Location** *(a), (b), (c)* Access to mechanical power transmission apparatus in a vault, room, or closet, or in an area surrounded by a wall, screen, or fence that is controlled by lock and key or other approved means is considered to be restricted access. A wall, screen, or fence less than 2,440 mm (8 ft) in height is not considered adequate to prevent access unless it has other features that provide a degree of isolation equivalent to a 2,440 mm (8 ft) fence [also see paras. 1.3.2, E3.2.1, and E3.2.3(b)]. Access to these locations is restricted to trained personnel who are aware of the hazards. These areas are not workstations.
4 SAFETY LABELS AND SIGNS	**E4 SAFETY LABELS AND SIGNS** For the purpose of selecting the most appropriate signs or labels, the applicable standards are cited as follows: ANSI Z535.1-1991, Safety Color Code ANSI Z535.2-1991, Environmental and Facility Safety Signs ANSI Z535.3-1991, Criteria for Safety Symbols ANSI Z535.4-1991, Product Safety Signs and Labels ANSI Z535.5-1991, Accident Prevention Tags Publisher: American National Standards Institute (ANSI), 11 West 42nd Street, New York, NY 10036 When used, signs and labels should be so placed to alert and inform the viewer in sufficient time to avoid potential harm from the hazard.
4.1 Safety Labels Safety labels for application on power transmission equipment shall be in accordance with the ANSI Z535 Standard.	
4.2 Safety Signs. Signs shall be placed conspicuously in hazardous areas to warn of possible danger or physical injury. A sign shall not mask or be a hazard itself.	

Copyright ASME International
Provided by IHS under license with ASME
No reproduction or networking permitted without license from IHS
Not for Resale

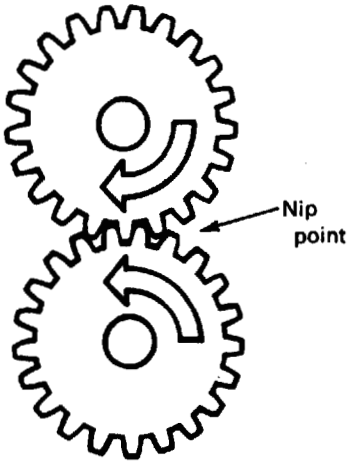

FIG. 1 ROTATING MOTION

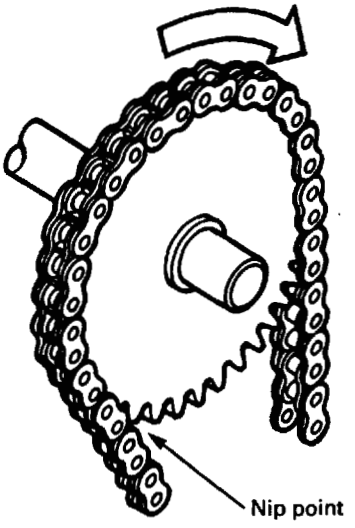

FIG. 2 ROTATING MOTION

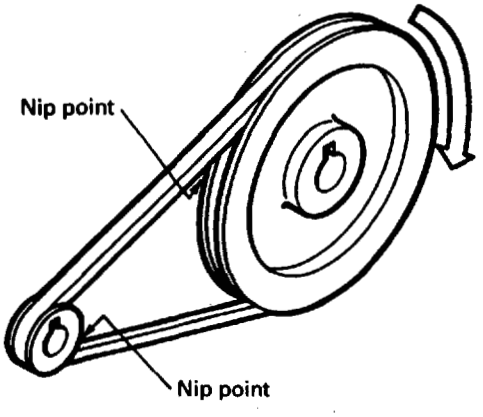

FIG. 3 ROTATING MOTION

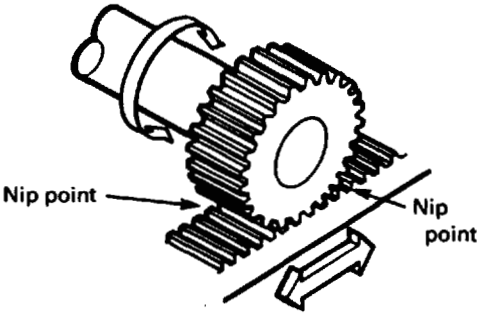

FIG. 4 ROTATING / RECIPROCATING MOTION

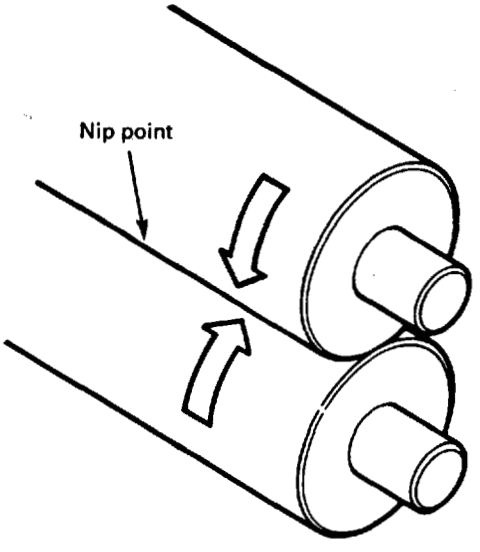

FIG. 5 ROTATING MOTION

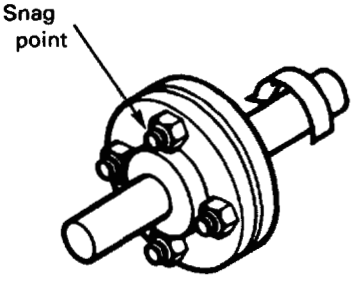

FIG. 6 ROTATING MOTION

Copyright ASME International
Provided by IHS under license with ASME
No reproduction or networking permitted without license from IHS

Not for Resale

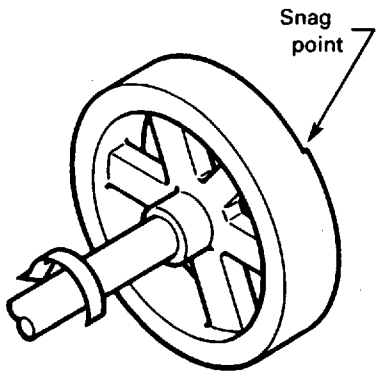

FIG. 7 ROTATING MOTION

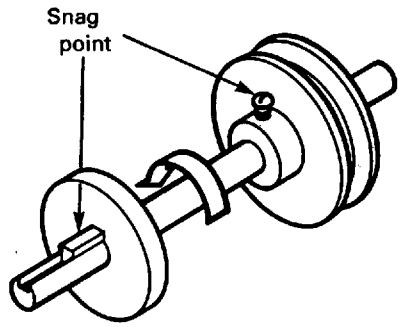

FIG. 8 ROTATING MOTION

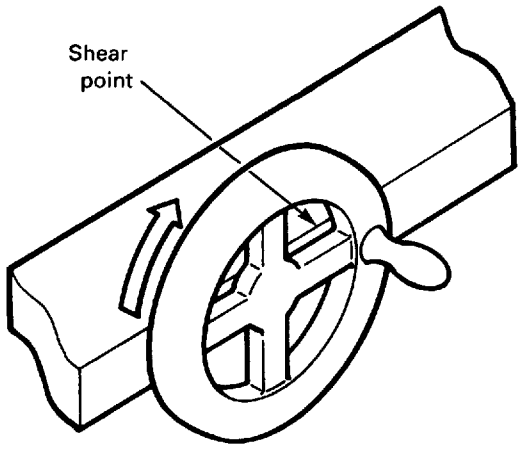

FIG. 9 ROTATING MOTION

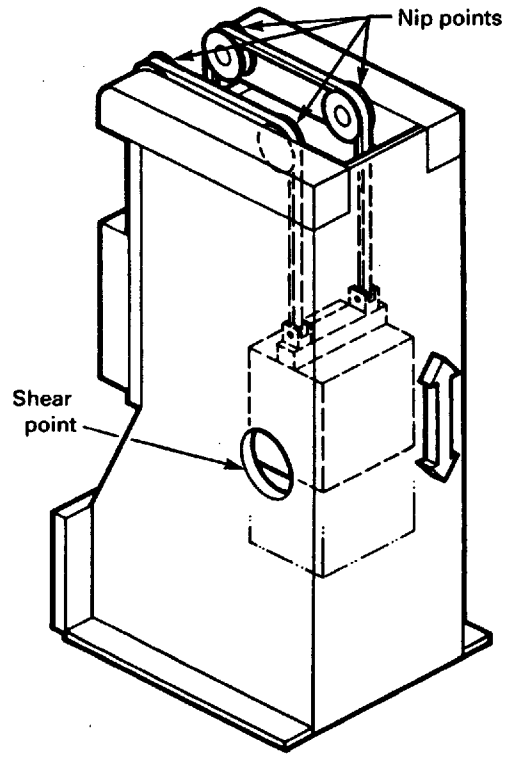

FIG. 10 ROTATING / RECIPROCATING MOTION

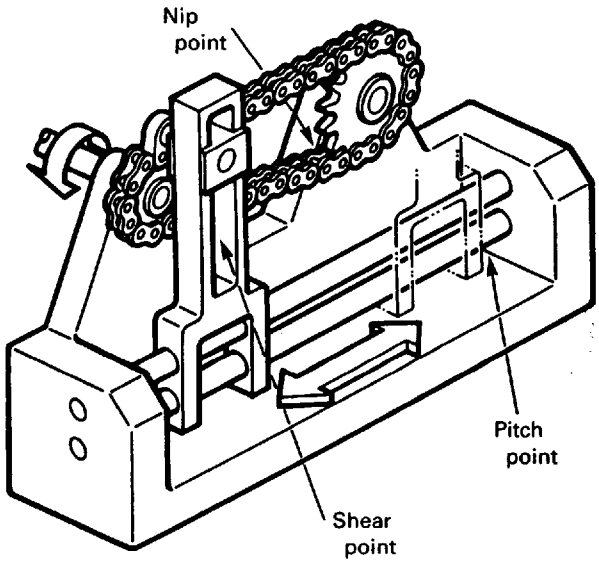

FIG. 11 ROTATING / RECIPROCATING MOTION

Copyright ASME International
Provided by IHS under license with ASME
No reproduction or networking permitted without license from IHS

Not for Resale

Width of opening *A* may be the opening between the guard and the machine frame as shown by A_1 below. *A* may also be the opening in an expanded metal filler (A_2) or between slats (A_3). *A* may also be the opening in a frame or barrier guard.

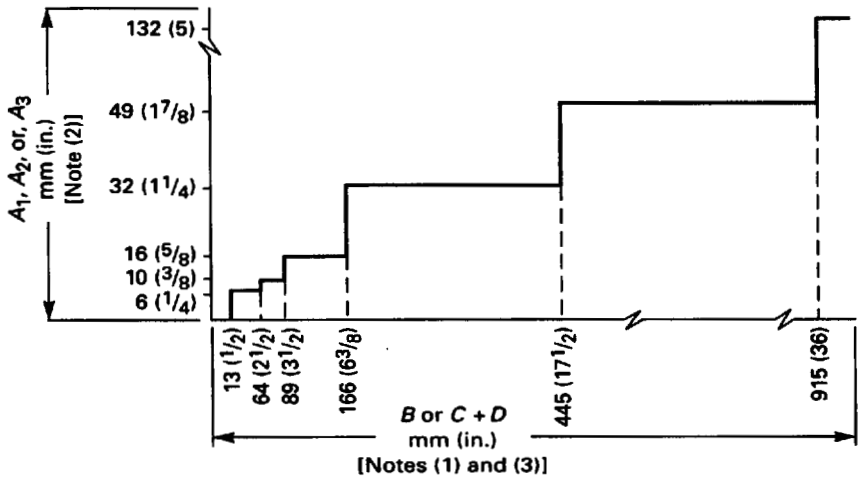

Distance to moving part to an opening *A* must be less than *B* or *C* + *D* (whichever is less).

(a)

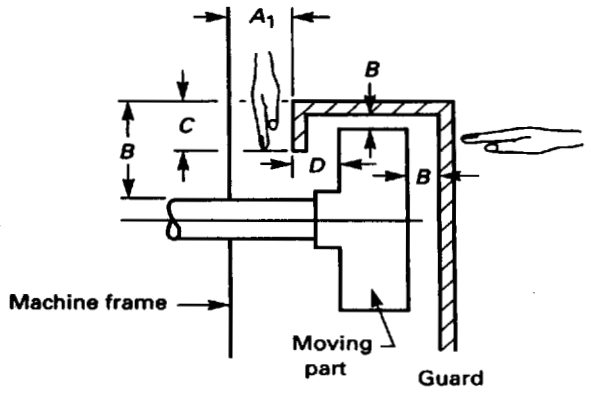

(b)

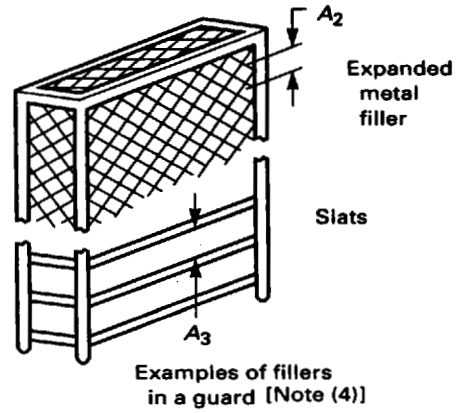

(c)

GENERAL NOTES:
(a) Values are obtained from the Liberty Mutual Research Center for Safety and Health report, "A Review of Machine Guarding Recommendations," 1996.
(b) 1 in. = 25.4 mm.

NOTES:
(1) *C* + *D* applies, in addition to *B*, whenever an opening such as *A* exists.
(2) Width of opening *A* greater than 132 mm (5 in.) is not permitted.
(3) A gap opening for *A* is not permitted for *B* or *C* + *D* distances less than 13 mm (1/2 in.).
(4) Slats may be vertical, horizontal, or angular.

(00) **FIG. E12 RECOMMENDED SAFEGUARDING DIMENSIONS**

Copyright ASME International
Provided by IHS under license with ASME
No reproduction or networking permitted without license from IHS
Not for Resale

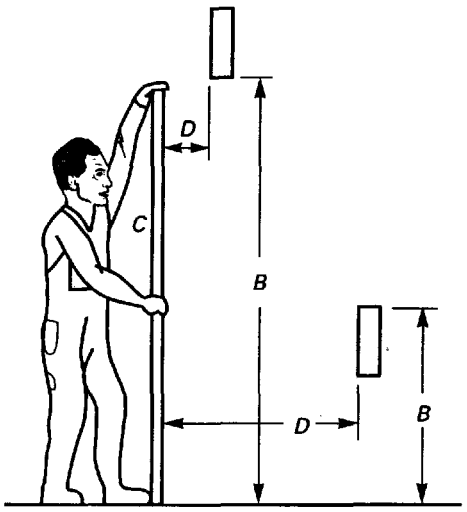

(00) **TABLE E1 HORIZONTAL DISTANCES REQUIRED FROM A BARRIER TO A HAZARD**

Vertical Distance From the Ground to the Hazard, *B*, mm (in.)	Vertical Height of the Barrier, *C*, mm (in.)							
	2,400 (96)	2,200 (86)	2,000 (78)	1,800 (71)	1,600 (63)	1,400 (55)	1,200 (48)	1,000 (40)
	Horizontal Distance From the Barrier to the Hazard, *D*, mm (in.)							
2,440 (96)	0	100 (4)	100 (4)	100 (4)	100 (4)	100 (4)	100 (4)	100 (4)
2,200 (86)	...	250 (10)	360 (14)	400 (16)	500 (20)	500 (20)	600 (24)	600 (24)
2,000 (78)	...	...	360 (14)	500 (20)	600 (24)	700 (28)	900 (36)	1,100 (43)
1,800 (71)	...	...	...	600 (24)	900 (36)	900 (36)	1,000 (40)	1,100 (43)
1,600 (63)	...	...	...	500 (20)	900 (36)	900 (36)	1,000 (40)	1,300 (51)
1,400 (55)	...	...	...	100 (4)	800 (32)	900 (36)	1,000 (40)	1,300 (51)
1,200 (48)	...	...	...	...	500 (20)	900 (36)	1,000 (40)	1,400 (55)
1,000 (40)	...	...	...	...	300 (12)	900 (36)	1,000 (40)	1,400 (55)
800 (32)	...	...	...	...	...	600 (24)	900 (36)	1,300 (51)
600 (24)	...	...	...	...	...	...	500 (20)	1,200 (48)
400 (16)	...	...	...	...	...	...	300 (12)	1,200 (48)
200 (8)	...	...	...	...	...	...	200 (8)	1,100 (43)

GENERAL NOTE: This Table is adapted from ISO 4254/1-1985 with permission of the American National Standards Institute (ANSI) under an exclusive licensing agreement with the International Organization for Standardization (ISO). No part of ISO 4254/1-1985 may be reproduced in any form, in an electronic retrieval system or otherwise, without the prior written consent of the American National Standards Institute, 11 West 42nd Street, New York, NY 10036.

Copyright ASME International
Provided by IHS under license with ASME
No reproduction or networking permitted without license from IHS

Not for Resale

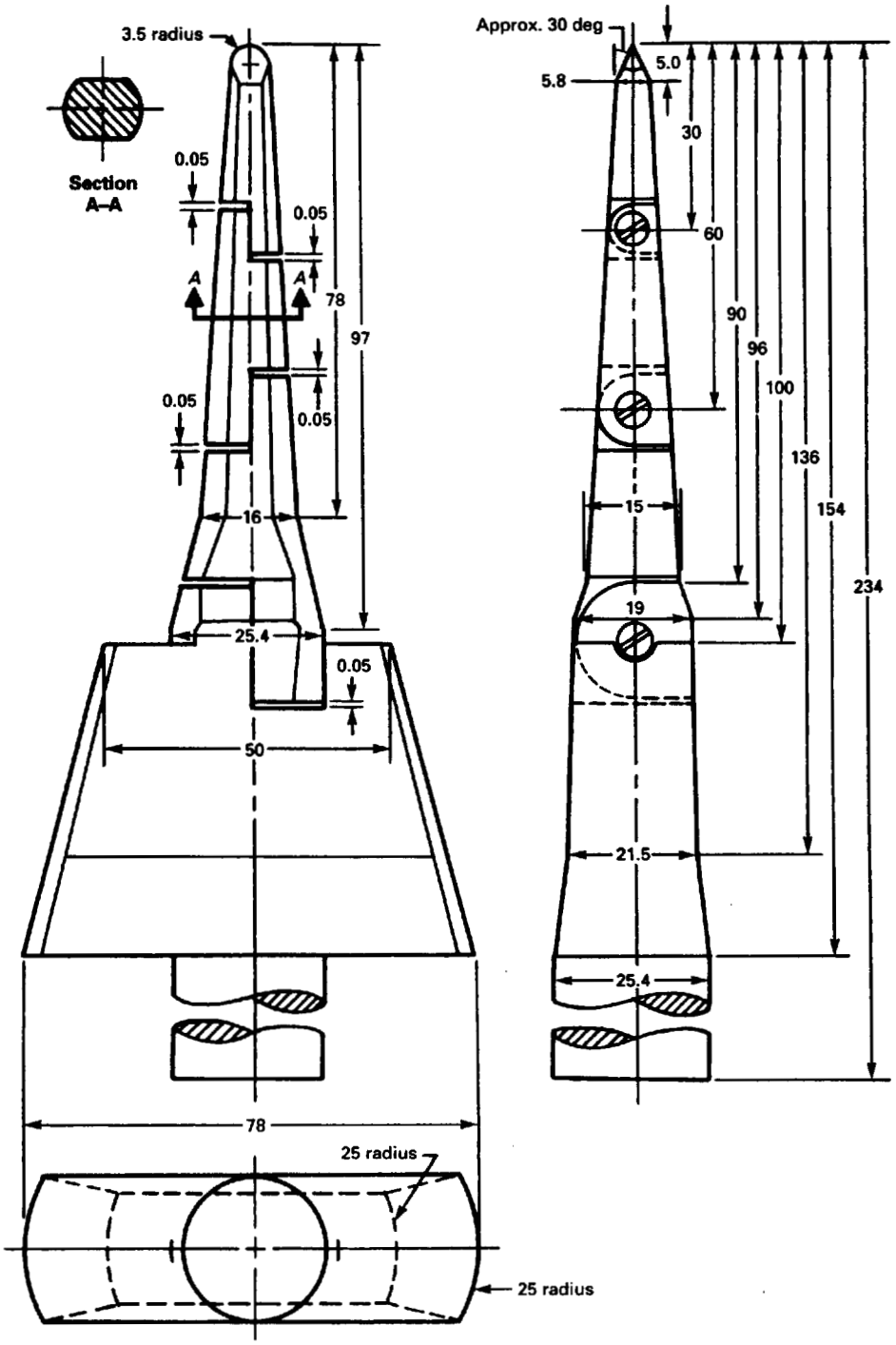

GENERAL NOTES: (a) All dimensions are in millimeters.
(b) 1 in. = 25.4 mm.
(c) This figure is courtesy of Underwriters Laboratories, Inc.

(00) **FIG. E13 ARTICULATE PROBE**

Copyright ASME International
Provided by IHS under license with ASME
No reproduction or networking permitted without license from IHS
Not for Resale

MANDATORY APPENDIX I
PREPARATION OF TECHNICAL INQUIRIES TO THE B15 COMMITTEE

The B15 Committee meets to consider written requests for interpretations of and revisions to the requirements of the standard, and to develop new requirements as dictated by technological development.

Suggestions for improvement of this Standard, especially those based on actual experience in their application shall be written in accordance with the following format:

(a) Specify paragraph designation of the pertinent standard.

(b) Suggested change — addition, deletion, revision, etc.

(c) Briefly stated reason and/or evidence for suggested change.

(d) Suggested changes to more than one paragraph should be submitted in the order that they appear in the Standard.

The request for interpretation shall be in the following format:

Subject: Cite the applicable paragraph number(s) and a concise description.

Edition: Cite the applicable edition of the pertinent standard for which the interpretation is being requested.

Question: Phrase the question as a request for an interpretation of a specific requirement suitable for general understanding and use, not as a request for an approval of a proprietary design or situation. The inquirer may also include any plans or drawings which are necessary to explain the question; however, they should not contain proprietary names or information.

ASME procedures provide for reconsideration of any interpretation when or if additional information that might affect an interpretation is available. Further, persons aggrieved by an interpretation may appeal to the cognizant ASME Committee or Subcommittee. ASME does not "approve," "certify," "rate," or "endorse" any item, construction, proprietary device, or activity.

Inquiries shall be submitted to the Secretary of the B15 Committee, ASME, Three Park Avenue, New York, NY 10016.

Previous page is blank.

Copyright ASME International
Provided by IHS under license with ASME
No reproduction or networking permitted without license from IHS
Not for Resale