ASME B133.9 94 ■ 0759670 0543700 262 ■

ASME B133.9-1994

(REVISION OF ANSI B133.9-1979)

Measurement of Exhaust Emissions from Stationary Gas Turbine Engines

AN AMERICAN NATIONAL STANDARD



The American Society of Mechanical Engineers

Copyright ASME International
Provided by IHS under license with ASME
No reproduction or networking permitted without license from IHS

Not for Resale

AN AMERICAN NATIONAL STANDARD

Measurement of Exhaust Emissions from Stationary Gas Turbine Engines

ASME B133.9-1994

(REVISION OF ANSI B133.9-1979)

The American Society of Mechanical Engineers

345 East 47th Street, New York, N.Y. 10017

Copyright ASME International
Provided by IHS under license with ASME
No reproduction or networking permitted without license from IHS

Not for Resale

Date of Issuance: June 30, 1994

This Standard will be revised when the Society approves the issuance of a new edition. There will be no addenda or written interpretations of the requirements of this Standard issued to this Edition.

ASME is the registered trademark of The American Society of Mechanical Engineers.

This code or standard was developed under procedures accredited as meeting the criteria for American National Standards. The Consensus Committee that approved the code or standard was balanced to assure that individuals from competent and concerned interests have had an opportunity to participate. The proposed code or standard was made available for public review and comment which provides an opportunity for additional public input from industry, academia, regulatory agencies, and the public-at-large.

ASME does not "approve," "rate," or "endorse" any item, construction, proprietary device, or activity.

ASME does not take any position with respect to the validity of any patent rights asserted in connection with any items mentioned in this document, and does not undertake to insure anyone utilizing a standard against liability for infringement of any applicable Letters Patent, nor assume any such liability. Users of a code or standard are expressly advised that determination of the validity of any such patent rights, and the risk of infringement of such rights, is entirely their own responsibility.

Participation by federal agency representative(s) or person(s) affiliated with industry is not to be interpreted as government or industry endorsement of this code or standard.

ASME accepts responsibility for only those interpretations issued in accordance with governing ASME procedures and policies which preclude the issuance of interpretations by individual volunteers.

No part of this document may be reproduced in any form,
in an electronic retrieval system or otherwise,
without the prior written permission of the publisher.

Copyright © 1994 by
THE AMERICAN SOCIETY OF MECHANICAL ENGINEERS
All Rights Reserved
Printed in U.S.A.

Copyright ASME International
Provided by IHS under license with ASME
No reproduction or networking permitted without license from IHS

Not for Resale

FOREWORD

(This Foreword is not part of ASME B133.9-1994.)

The purpose of the B133.9 standard is to provide criteria for the preparation of gas turbine procurement specifications. This Standard provides essential information for the procurement of gas turbine power plants. It applies to open cycle, closed cycle, and semi-closed cycle gas turbines with conventional combustion systems for industrial, marine, and electric power applications. Not included are gas turbines applied to earth moving machines, agricultural and industrial-type tractors, automobiles, trucks, buses, and aero-propulsion units.

The B133.9 standard addresses exhaust emission measurements that are performed to assure compliance with federal, state, and local emission regulations. The pollutant measurement methods mandated by regulatory agencies are referenced and other alternative methods are outlined.

Suggestions for improvement of this standard are welcome. Send suggestions to: The American Society of Mechanical Engineers, United Engineering Center, 345 East 47th Street, New York, NY 10017.

Approval for American National Standard B133.9 was granted by the American National Standards Institute on April 5, 1994.

Copyright ASME International
Provided by IHS under license with ASME
No reproduction or networking permitted without license from IHS
Not for Resale

ASME STANDARDS COMMITTEE B133
Procurement Standards for Gas Turbines

(The following is the roster of the Committee at the time of approval of this Standard.)

OFFICERS

R. P. Allen, *Chairman*
R. R. Balsbaugh, *Vice Chairman*
A. M. Nickles, *Secretary*

COMMITTEE PERSONNEL

R. P. Allen, Clemson University
R. R. Balsbaugh, Wisconsin Electric Power Co.
S. M. DeCorso, Power Tech Associates, Inc.
D. C. Hall, National Gas Pipeline Company of America
R. A. Harmon, Consultant
P. J. Hart, Allison Gas Turbine — Division of General Motors
G. S. Howard, Redbrook Inc.
D. B. Johnson, Tenneco Gas
R. T. Lecren, Solar Turbines Inc.
G. Opdyke, Consulting Engineer
D. A. Rains, Decision Engineering
E. Sciubba, Dept. di Mecanica Ed Aeronautica
J. M. Vaught, Vaught Engineering, Inc.
W. C. Walke, Jr., Sargent & Lundy Engineers
J. P. Zanyk, J. P. Zanyk and Associates, Inc.

PERSONNEL OF SUBCOMMITTEE 2 — FUELS AND ENVIRONMENT

W. H. von Klein Smid, *Chairman*
J. M. Vaught, *Vice Chairman*
W. W. Bathie
S. Bonifazi
F. W. Crouse, Jr.
S. M. DeCorso
R. T. Lecren
R. N. Levine
J. A. McSorley
C. Nakaishi
G. Opdyke, Jr.
P. W. Pillsbury
H. Schreiber
E. J. Wilson, Jr.

Copyright ASME International
Provided by IHS under license with ASME
No reproduction or networking permitted without license from IHS
Not for Resale

PERSONNEL OF ASME STEERING COMMITTEE ON DEVELOPMENT OF EMISSIONS MEASUREMENT TECHNIQUES AND SPECIFICATION FOR GAS TURBINES

R. P. Allen, Clemson University
R. J. Art, ASME Research
W. Gray, *Special Consultant,* Radian Corp.
W. S. Y. Hung, Solar Turbines Inc.
R. Huntley, Emission Measurement Branch, USEPA
J. J. Macak, Westinghouse Electric Corp.
G. Opdyke, Dykewood Enterprises
H. Schreiber, Electric Power Research Institute
J. M. Vaught, *Principle Investigator,* Vaught Engineering Inc.
W. H. von Klein Smid, Engineering Consultant
P. Westlin, Emission Measurement Branch, USEPA

Copyright ASME International
Provided by IHS under license with ASME
No reproduction or networking permitted without license from IHS
Not for Resale

CONTENTS

Foreword iii
Standard Committee Roster v

1 Scope 1
2 Definitions 1
3 Exhaust Emissions From Gas Turbines 3
4 Responsibilities of the Gas Turbine Manufacturer and User 3
5 Application Data 3
5.1 Gas Turbine Characteristics 3
5.2 Operating Cycle 4
5.3 Test Conditions 4
5.4 References 4
6 Measurement of Gaseous Exhaust Components 4
6.1 Measured Components 4
6.2 Measurement System 4
6.2.1 General 4
6.2.2 Sampling 4
6.2.3 Inlet Sampling 4
6.2.4 Gas Sampling Probe 4
6.2.5 Sample Transfer and Conditioning 5
6.2.6 Analytical Instruments 5
6.2.7 Testing, Analysis, and Reporting 6
6.3 Instrumentation 9
6.3.1 Oxides of Nitrogen (NO_x) 9
6.3.2 Carbon Monoxide (CO) and Carbon Dioxide (CO_2) 10
6.3.3 Sulfur Dioxide (SO_2) 12
6.3.4 Sulfuric Acid (H_2SO_4) Mist 12
6.3.5 Total Hydrocarbons (HC) 13
6.3.6 Nonmethane Hydrocarbons (NMHC) and Volatile Organic Compounds (VOC) 13
6.3.7 Ammonia (NH_3) 15
6.3.8 Oxygen (O_2) 15
6.3.9 Water Vapor (H_2O) 16
6.4 Quality Provisions 17
6.4.1 Calibration 17
6.4.2 Recommended Accuracy 18
6.4.3 Special Requirements 18
6.5 References 18
7 Smoke Measurement 19
7.1 Visual Opacity 19
7.1.1 Current Method 19
7.1.2 Measurement Variability 19

Copyright ASME International
Provided by IHS under license with ASME
No reproduction or networking permitted without license from IHS
Not for Resale

7.2 Smoke Density 20
7.2.1 SAE Aircraft Method 20
7.2.2 Optical Smokemeter 21
7.2.3 Other Methods 22
7.3 References 22
8 Particulate Measurement 22
8.1 Recommended Method 22
8.2 Sampling Train 23
8.3 Sampling Procedure 23
8.4 Analysis of Results 24
8.5 References 24
9 Fuel Analysis 24
9.1 Recommended Sampling Procedure 24
9.2 Fuel Test Methods 25
9.3 References 25
10 Calculations and Conversions 26
10.1 Basic Assumptions 26
10.2 Symbols and Units 26
10.3 Determination of Engine Exhaust Flow Rate 27
10.3.1 USEPA *F* Factor Method 28
10.3.2 ICAO (SAE) Method 29
10.4 Conversion Between Wet and Dry Exhaust 30
10.5 Conversion to 15% Oxygen Level 30
10.6 Correction to ISO Conditions 30
10.7 Calculation of VOC and NMHC 30
10.8 References 30

Figures

6.1 Sampling Points 6
6.2 Measurement System for Gaseous Components 7
6.3 Flow Diagram of NO Converters Used to Obtain NH_3 Measurement 16
7.1 ICAO Smoke Analysis System 21
8.1 Schematic of Impinger Train 23

Tables

6-1 Gaseous Exhaust Components 5
6-2 Stationary Gas Turbine Data Record 8
6-3 Gaseous Emissions Measurement Data 9
6-4 Performance Specifications for NO_x Analyzer 10
6-5 Performance Specifications for CO Analyzer 11
6-6 Performance Specifications for CO_2 Analyzer 11
6-7 Performance Specifications for SO_2 Analyzer 12
6-8 Performance Specifications for HC Analyzer 14
6-9 Performance Specifications for O_2 Analyzer 17
6-10 Recommended Accuracy of Calibration Gases 18
9-1 Summary of Fuel Analysis Methods 25
10-1 General Symbols 26
10-2 Subscripts and Indices 27
10-3 Chemical Symbols 27
10-4 Average *F* Factors 29
10-5 Conversion Factors for Concentration 29

Copyright ASME International
Provided by IHS under license with ASME
No reproduction or networking permitted without license from IHS
Not for Resale

Appendices

A	Emissions From Gas Turbines	33
B	Standard Reference Conditions	37
C	Physical Properties	38
D	Air Laws and Regulations	40
E	Emission Control Methods	42
F	Listed Air Toxics	45

Copyright ASME International
Provided by IHS under license with ASME
No reproduction or networking permitted without license from IHS
Not for Resale

MEASUREMENT OF EXHAUST EMISSIONS FROM STATIONARY GAS TURBINE ENGINES

1 SCOPE

This Standard provides guidance in the measurement of exhaust emissions for the emissions performance testing (source testing) of stationary gas turbines. Source testing is required to meet federal, state, and local environmental regulations. The standard is not intended for use in continuous emissions monitoring (CEM) although many of the on-line measurement methods defined may be used in both applications.

This Standard applies to engines that operate on natural gas and liquid distillate fuels. Much of this Standard also will apply to engines operated on special fuels such as alcohol, coal gas, residual oil, or process gas or liquid. However, these methods may require modification or be supplemented to account for the measurement of exhaust components resulting from the use of a special fuel.

2 DEFINITIONS

For the purposes of this Standard, the definitions given below apply.

accuracy — the closeness with which a measurement approaches the true value established independently

air composition — The composition of dry air shall be as defined in ISO 2533, i.e. (See Appendix C):

N_2	=	78.084% volume
O_2	=	20.948% volume
Ar	=	0.934% volume
Balance	=	0.034% volume
Total	=	100.000% volume

air toxics — When admitted to the air, a number of compounds are determined to be toxic. These compounds are defined in the US by the USEPA, which has stipulated 189 such compounds. State agencies and those of other countries have different lists. The USEPA list of air toxics is given in Appendix F.

calibration drift — the difference in the measurement system output readings from the known concentration of the calibration gas after a stated period of operation during which no unscheduled maintenance, repair, or adjustment took place and the input at the time of the first measurement

calibration error — the difference between the gas concentration indicated by the measurement system and the known concentration of the calibration gas

calibration gas — a mixture of gases of specified and known composition used for calibration of the analyzer system such as zero gas, span gas, etc.

chemiluminescence analyzer — a method of measuring NO_x using the principle that NO reacts with ozone (O_3) to give nitrogen dioxide (NO_2) and oxygen (O_2) with an associated light emission

concentration — the volume fraction φ_i of the component of interest in the gas mixture, expressed as volume percentage or as parts per million

continuous sampling — the presentation of a flowing sample to the analytical analyzer to obtain continuous measurement of concentrations of the components of interest

flame ionization detector — a hydrogen-air diffusion flame detector that produces a signal nominally proportional to the mass-flow rate of hydrocarbons entering the flame per unit of time — generally assumed responsive to the number of carbon atoms entering the flame

fuel/air ratio — the mass rate of fuel flow to the engine divided by the mass rate of dry airflow through the engine

gaseous emissions — substances emitted in the form of gas or vapor downstream of the combustion chamber of the engine

humidity — a measure of the amount of water vapor present in a gas mixture. Absolute humidity or specific humidity is the mass of vapor per unit mass of gas generally expressed as mass of vapor per mass of dry air. Relative humidity is the ratio of the water vapor pressure to its saturation pressure at that temperature.

Copyright ASME International
Provided by IHS under license with ASME
No reproduction or networking permitted without license from IHS
Not for Resale

interference — analyzer response due to the presence of components other than the gas (or vapor) that is to be measured

ISO standard day conditions — 288 Kelvin (59°F) temperature, 60% relative humidity, and 101.3 kPa (14.696 psia) pressure

isokinetic — Isokinetic (equal velocity) sampling occurs when a sample is drawn into the probe at the same gas velocity as the gas stream from which it is extracted.

linearity — ability of an instrument to respond in direct proportion to an input signal

measurement system — the total equipment required for the determination of a gas concentration or a gas emission rate

NO_x — oxides of nitrogen; specifically, the sum of nitric oxide (NO) and nitrogen dioxide (NO_2)

noise — random variation in instrument output not associated with characteristics of the sample to which the instrument is responding, distinguishable from its drift characteristics

nondispersive infrared analyzer — an analyzer that by absorption of infrared energy selectively measures specific components

nonmethane hydrocarbon — hydrocarbon compounds in the measurement of interest, excluding methane from the total

opacity — the degree to which emissions reduce the transmission of light and obscure the view of an object in the background

particulates — any solid or condensable material in the exhaust gas stream, at the location and conditions of the sample collection

parts per million (ppm) — volumetric concentration of the component i in 10^6 volume parts of gas mixture

parts per million carbon ($ppmC_1$) — the mole fraction of hydrocarbon multiplied by 10^6 measured on a "CH_4" equivalence basis. Thus, 1 ppm of methane is indicated as 1 $ppmC_1$. To convert ppm concentration of any hydrocarbon to an equivalent $ppmC_1$ value, multiply ppm concentration by the number of carbon atoms per molecule of the gas. For example, 1 ppm propane translates as 3 $ppmC_1$ hydrocarbon; 1 ppm hexane as 6 $ppmC_1$ hydrocarbon.

peak load — The peak load is defined (by the EPA) as the maximum operating load for the plant.

PM-10 — particulate material with an aerodynamic diameter less than or equal to a nominal value of 10 micrometers (microns)

power — a measure of work done in unit time usually expressed in kW or bhp and at some specified operating condition. Power may be expressed in terms of output at the turbine, electrical power at the generator terminals, or gas power in the case of a gas turbine or gas generator producing gas or compressed air (bleed air from a circuit compressor). Any shaft or electric power obtained from the engine waste heat, e.g., by an exhaust gas power turbine, may be added to the engine power. The power equivalent of any other waste heat may not be included regardless of whether it is used for process heat or some other purpose.

reference temperature — A reference temperature of 0°C (32°F) is chosen for chemical calculations because of available chemical data and evaluation methods.

relative hydrocarbon response — the different response of the test equipment to the same sample hydrocarbon concentrations expressed as equivalent $ppmC_1$, dependent on the class or admixture of classes of hydrocarbon components

repeatability — a measure of the similarity between repeated readings when recorded under the same operating conditions. This measure can apply both to the analytical system and to the sample source.

resolution — the smallest change in a measurement that can be detected

response — the change in instrument output signal that occurs with a change in sample concentration. Also, the output signal corresponding to a given sample concentration.

response time — the amount of time required for the measurement system to display on the data output, a step change in concentration of an emission component

smoke — small gas-borne solid particles mostly, but not limited to, black carbonaceous material from the burning of fuel, which in sufficient concentrations creates visual opacity

smoke density — the mass loading of smoke particles in the exhaust, expressed in mg/Nm^3 (grains/scf)

span drift — the time related change in response of the analyzer to repetition of a span gas measurement under identical conditions of flow and concentration

span gas — a calibration gas to be used for routine verification and adjustment of analyzer response

span value — the upper limit of a gas concentration measurement range that is specified for affected source categories in the applicable part of the regulations

Copyright ASME International
Provided by IHS under license with ASME
No reproduction or networking permitted without license from IHS
Not for Resale

stability/calibration drift — time related deviation of instrument output from span set point when it is operating on calibration gas

stationary gas turbine — any simple cycle gas turbine, regenerative cycle gas turbine, or any gas turbine portion of a combined cycle steam/electric generating system that is not self-propelled. It may, however, be mounted on a vehicle for portability.

test sequence — a series of functionally related tests in which the test operation without interruption progresses systematically from one test mode to another

total hydrocarbons — the general term for organic compounds measured by the flame ionization detection method

volatile organic compounds (VOC) — all hydrocarbons measured in or emitted from a given system minus both the methane and ethane components

zero air — a mixture of oxygen and nitrogen in the same proportion of oxygen to inert as in the atmospheric air, free from other species

zero drift — time related deviation of instrument output from zero set point when it is operating on gas free of the component to be measured

zero gas — a gas to be used in establishing the zero, or no-response, adjustment of an instrument

3 EXHAUST EMISSIONS FROM GAS TURBINES

Gas turbine exhaust contains combustion products (including nitrogen, oxygen, carbon dioxide, and water vapor) that are not considered to be air pollutants. In addition, it contains small concentrations of air pollutants including oxides of nitrogen, oxides of sulfur, carbon monoxide, unburned and partially burned hydrocarbons, particulates, and visible smoke. This Standard addresses components that are typically found in the exhaust of most gas turbines operating on natural gas and liquid distillate fuels and that are controlled by various federal, state, and local regulations throughout the world.

The components of concern are listed below. Their formation and consequence are described in Appendix A.

(*a*) aldehydes[1]
(*b*) ammonia (NH_3)[2]
(*c*) carbon monoxide (CO)
(*d*) hydrocarbons (total) (HC)
(*e*) metallics
(*f*) oxides of nitrogen (NO_x)
(*g*) sulfur dioxide (SO_2)
(*h*) particulates (PM)[3]
(*i*) sulfuric acid (H_2SO_4) mist
(*j*) smoke and smoke density

4 RESPONSIBILITIES OF THE GAS TURBINE MANUFACTURER AND USER

The manufacturer and owner/operator (user) of a gas turbine should agree on specific responsibilities in meeting the applicable regulatory requirements for emissions performance testing. In general, it is recommended that the user be responsible for identifying the regulations that apply to the particular site and equipment that are being considered, and that the manufacturer be responsible for providing the detailed information on the design, performance, and emissions characteristics of the gas turbine.

Although the user has the ultimate responsibility for obtaining operating permits and the source testing required by these permits, the manufacturer may have greater resources and expertise for the planning of emissions tests and the reporting of results to the cognizant regulatory agency. The extent of manufacturer contribution to these activities and to the selection of third party testing laboratories should be the subject of agreement.

5 APPLICATION DATA

5.1 Gas Turbine Characteristics

It is recommended that the manufacturer be responsible for supplying data for all gas turbine characteristics needed by the owner/operator for (1) application for construction and operating permits, and (2) planning the emissions performance test that will be accomplished by a third party test laboratory. As an example, this data should include, but not be limited to:

(*a*) general information on the exhaust flow rate, velocity, temperature, and stoichiometry of the exhaust;

(*b*) concentration and emission rates of gaseous exhaust components as a function of load and ambient temperature;

[1]To be discussed, not measured.

[2]Not a naturally occurring component in gas turbine exhaust; occurs in the exhaust of units equipped with selective catalytic reduction.

[3]Includes total suspended particulates and PM-10.

Copyright ASME International
Provided by IHS under license with ASME
No reproduction or networking permitted without license from IHS

Not for Resale

ASME B133.9 94 ■ 0759670 0543712 T84 ■

(*c*) use and operating data associated with water or steam injection for NO_x control;

(*d*) use and operating data for exhaust treatment equipment, such as oxidizing catalysts or selective catalytic reduction systems (SCR), and the exhaust emissions characteristics obtained with and without controls;

(*e*) presence and emission of hazardous air pollutants;

(*f*) use and environmental effects of fuel additives.

5.2 Operating Cycle

The operating cycle, as defined by the permit application, must be specified for the source testing. In the NSPS for Gas Turbines, the USEPA has specified that emissions testing be performed at "30, 50, 75, and 100 percent of peak load, or at four points in the normal operating range of the gas turbine, including the minimum point in the range and peak load. All loads shall be corrected to ISO conditions using the appropriate equations supplied by the manufacturer." [1]

5.3 Test Conditions

The owner/operator should select the source test laboratory with assistance from the manufacturer, if needed, and construct a measurement plan (test protocol). The components to be tested, the test method for each, and the operating conditions during testing should be specified in this measurement plan. The owner/operator is normally held responsible for obtaining approval of the test plan by the cognizant regulatory agency.

Other conditions to be agreed on and stated in the plan are listed below. Many of these conditions are stipulated by the USEPA.

(*a*) Special treatment and handling of the samples

(*b*) Specification of the test fuel

(*c*) Fuel sample collection and analysis

(*d*) Design and location of test ports

(*e*) Test methods, instruments, and scales to be used

(*f*) Scaffolding, safety requirements for the test crew, and other necessary protection

(*g*) The influence of weather and climate on ambient conditions, test methods, sampling, crew performance, and safety

5.4 References

[1] Standards of Performance for New Stationary Sources, Subpart GG — Standards of Performance for Stationary Gas Turbines, US Federal Register Title 40, Part 60.

6 MEASUREMENT OF GASEOUS EXHAUST COMPONENTS

6.1 Measured Components

The following gaseous components are to be measured on a continuous basis or determined by the method indicated in Table 6-1.

6.2 Measurement System

6.2.1 General. The measurements are to be made by continuous flow sampling; however, discrete samples may be taken if agreed to by the cognizant regulatory control agency. The three basic elements of the measuring system are:

(*a*) sampling probe;

(*b*) transfer and conditioning;

(*c*) analytical instruments and data acquisition.

6.2.2 Sampling. Exhaust installations for simple cycle engines consist of exhaust ducting, a silencer, and an exhaust stack. It is recommended that for these installations, the sampling plane be placed as near to the engine as practical and still allow for representative sampling. Whenever possible, the sampling site shall be located upstream of the point of introduction of dilution air into the duct. For engines with heat recovery boilers, duct burners, and exhaust pollution control systems, the sampling plane should be located in the exhaust stack, downstream of the last control device (as agreed to by the cognizant regulatory agency). A single sampling plane, requiring only one setup, is usually adequate for measuring emissions from the installation with or without supplementary systems operating.

6.2.3 Inlet Sampling. Sampling of the air entering the engine is recommended when the installation is located in areas of high pollution or when emissions from other sources are likely to be induced into the inlet. The same instruments can be used for this sampling as for the exhaust measurements. A single sampling point and an unheated sample line are normally acceptable for this ambient air testing.

6.2.4 Gas Sampling Probe. The gas sampling probe should be capable of providing a representative sample to the instruments. Sampling through a three-hole probe or through a single probe located at each measurement point defined below is acceptable. A demonstration that the sample is rep-

Copyright ASME International
Provided by IHS under license with ASME
No reproduction or networking permitted without license from IHS
Not for Resale

TABLE 6-1 GASEOUS EXHAUST COMPONENTS

Component	Recommended Method	Reference
Oxides of nitrogen (NO_x)	Chemiluminescence	6.3.1
Carbon monoxide (CO)	Nondispersive infrared	6.3.2
Carbon dioxide (CO_2)	Nondispersive infrared	6.3.2
Sulfur dioxide (SO_2)	Fuel analysis	6.3.3
Sulfuric acid mist (H_2SO_4)	Impinger train	6.3.4
Total hydrocarbons	Flame ionization detector	6.3.5
NMHC and VOC	Gas chromatograph	6.3.6
Ammonia (NH_3)	Chemiluminescence difference	6.3.7
Oxygen (O_2)	Electrochemical or paramagnetic	6.3.8
Water vapor (H_2O)	Impinger train	6.3.9

resentative of the mean flow using the carbon balance method, defined below, is required whether a single or multiholed sampling probe is used. Multiholed probes are to be designed so that the flow through each hole is made equal by designing the pressure drop through the holes to be at least 80% of the pressure drop through the entire probe [1]. Single probes shall be long enough to allow full traverse of the duct. Probe material shall be stainless steel or glass-lined stainless steel.

Three sampling locations positioned normal to the exhaust flow are required. These sampling points are to be located by establishing a measurement line through the centroid of the duct area at the measurement plane and in the direction of any expected stratification. The three sampling points are to be located at 16.7, 50, and 83.3% of the measurement line. Figure 6.1 shows the sampling probe and the sampling points. If the measurement line is longer than 2.4 m (7.9 ft) and component stratification is not expected, the tester may choose to locate the three traverse points on the measurement line at 0.4, 1.2, and 2.0 m (1.3, 3.9, and 6.6 ft) from the stack or duct wall. Additional details are given in the USEPA Performance Specification 2 for CEM [2].

The sampling probe and vacuum pump must be capable of continuously supplying a sufficient volume of sample gas to the analyzers. The sampling probe interface connections with the sample lines also must be heated to prevent condensation. The gas sampling probe used for the measurement of ammonia must be heated to 120°C (248°F).

6.2.5 Sample Transfer and Conditioning. The important elements of the measurement system are shown on the schematic drawing, Fig. 6.2. When special analytical equipment is used, this arrangement may need modification as agreed to by the cognizant regulatory agency.

The sample must be conditioned in a manner that is compatible with the operating requirements of the various analyzers. It is important to avoid condensation of the sample constituents, particularly hydrocarbons, sulfates, and water vapor. The entire sample line must be heated above the temperature at which the condensation of each specific constituent, considering its concentration, will occur.

For operation on natural gas or light distillate fuel oils, a sample line temperature of 160°C ±15 (320°F ±27) shall be maintained from the probe to the HC analyzer system. If neither hydrocarbons nor NH_3 are being measured, a sample line temperature of 65°C ±15 (149°F ±27) or 10°C (18°F) above the dew point of the sample is to be maintained. These requirements also apply to pumps, valves, and other equipment.

The following requirements also apply.

(*a*) All material in contact with the sample shall be nonreactive (stainless steel, Teflon, glass, or equivalent). It is recommended that all new lines made of PTFE (polytetrafluoroethylene) be purged by a continuous flow of nitrogen in order to remove the residue of solvents from manufacturing. During this procedure the line temperature should be maintained at 20°C (36°F) above the temperature at which it will operate.

(*b*) All connections should be tested and shown to be leak proof.

(*c*) All components should be designed to operate at the maximum temperature they will see in service.

Long lines are often unavoidable in the measurement of large turbine systems; however, the transfer time between the probe and the instruments should be kept as short as possible. The use of a second sample transfer pump is recommended to increase sample flow velocity if long sample transfer times are encountered.

6.2.6 Analytical Instruments. Analytical instruments shall be complete with all necessary flow con-

Copyright ASME International
Provided by IHS under license with ASME
No reproduction or networking permitted without license from IHS
Not for Resale

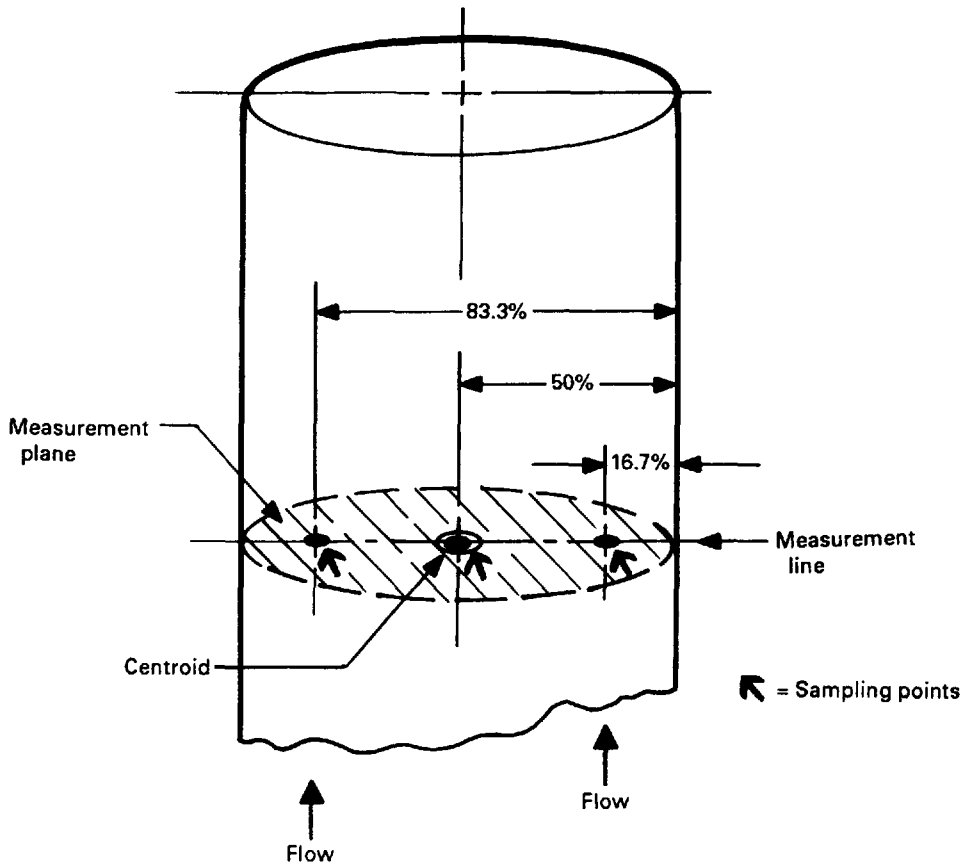

Circular Exhaust Duct

Measurement line established normal to flow through the centroid of exhaust duct measurement plane and in direction of expected stratification.

FIG. 6.1 SAMPLING POINTS

trol components, such as regulators, valves, and flow meters. Material in contact with the sample shall be corrosion resistant stainless steel or carbon loaded PTFE. The temperature of the sample shall be maintained, consistent with local pressure, to avoid condensation. Instruments subject to drift and calibration problems due to variations in ambient temperature are to be housed in a stable thermal environment.

Instruments shall be performance checked as required below.

6.2.7 Testing, Analysis, and Reporting

(*a*) Emissions measurements shall be made only after the gas turbine, associated heat recovery, and after treatment systems have stabilized, the turbine has reached steady state operation as defined in ISO 2314 [3], and the indicated emission rates have stabilized.

(*b*) A minimum of three measurements shall be taken after the analyzers are stable. The minimum sampling time for each measurement shall be one minute plus the measurement system response time. Longer sampling times may be required for additional averaging. The times should be determined by the engine manufacturer, the system designer, and the owner. A measurement shall consist of the steady state concentration averaged over the sampling time. The arithmetic average of the three measurements comprises a complete test. Each measurement shall differ no more than ±5% from the average or the test must be repeated.

(*c*) Readings of the gas turbine operating parameters shall be taken at the same time. Engine data to be recorded are shown in Table 6-2.

Copyright ASME International
Provided by IHS under license with ASME
No reproduction or networking permitted without license from IHS
Not for Resale

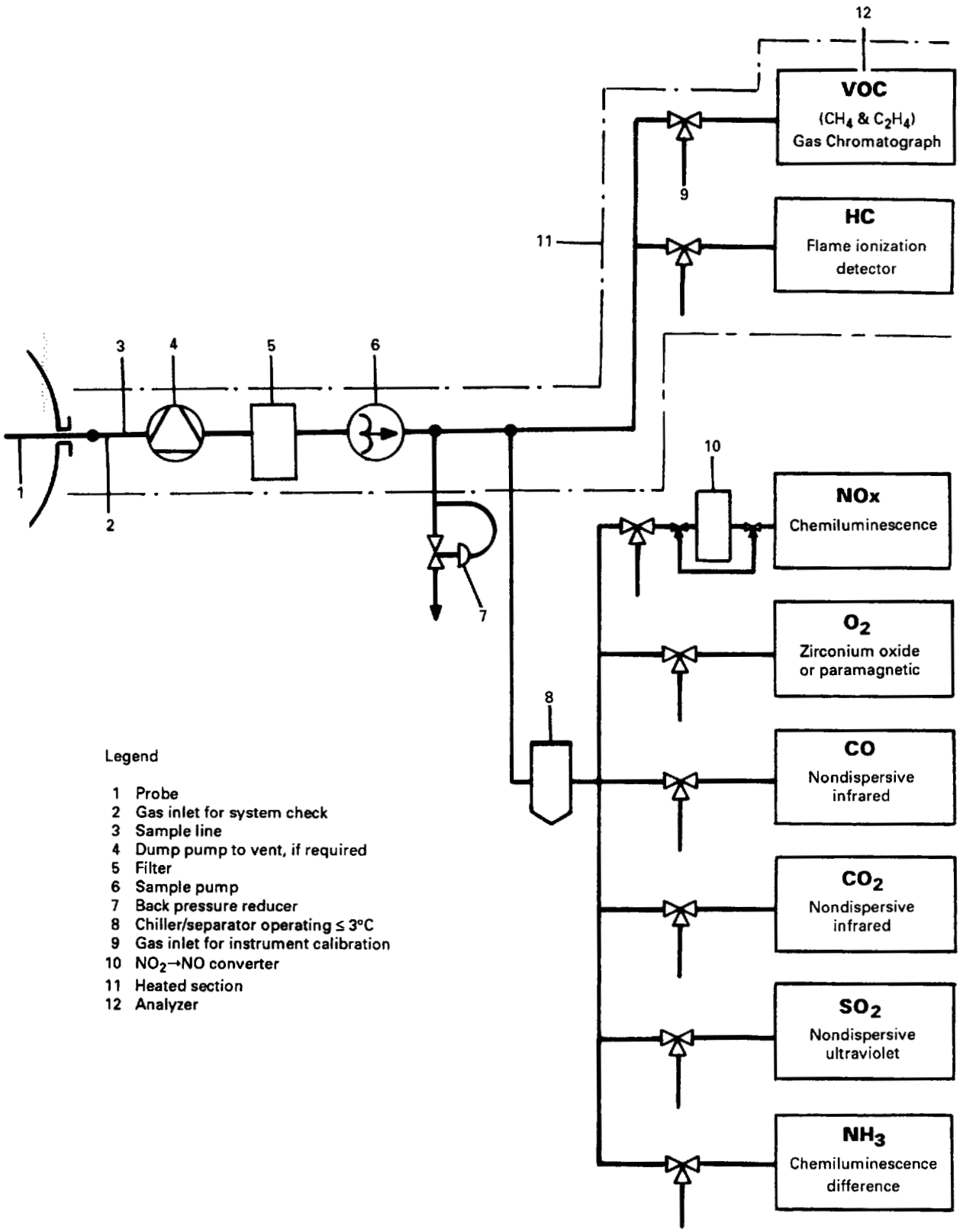

FIG. 6.2 MEASUREMENT SYSTEM FOR GASEOUS COMPONENTS

Copyright ASME International
Provided by IHS under license with ASME
No reproduction or networking permitted without license from IHS
Not for Resale

TABLE 6-2 STATIONARY GAS TURBINE DATA RECORD

General information		
1.	Date:	
2.	Location:	Company: Facility: City: State: Country:
3.	Test laboratory:	Name: Location: Test personnel:
4.	Gas turbine:	Manufacturer: Model: Serial no.: Installation location:
5.	Fuel:	Type: Heating value (HHV and LHV): *F* Factor, Fd (per USEPA Method 19. See Section 10) Ultimate and specific analyses to be included on separate data sheet:
6.	Emission controls:	Method: Design control parameters:
Operating data		
1.	Date:	
2.	Ambient conditions:	Temperature: Pressure: Relative and specific humidity: Weather conditions: Wind velocity and direction:
3.	Measurement no. (or reading no.):	
4.	Time of day:	
5.	Combustion turbine operating load and how measured:	
6.	Fuel flow and how measured:	
7.	Water or steam flow and how measured:	
8.	Engine exhaust flow and how determined (mfr. computer deck, airmeter, carbon balance):	
9.	Compressor inlet temperature: Combustor inlet temperature: Cycle temperature: Exhaust temperature: Inlet guide vane position: Other operating data:	

(*d*) Ambient atmospheric conditions should remain relatively stable during the measurement period. Testing shall be repeated if weather conditions change during the measurement (e.g., the onset of a rainstorm).

(*e*) Emissions measurements are to be recorded in parts per million, and exhaust gas measurements in percent volume, dry concentration. If exhaust is measured and recorded wet, this measurement should be corrected to dry concentration. Dry concentration is preferred since many gas turbines operate on natural gas fuel and have water or steam injection, both of which result in large amounts of water vapor in the exhaust that must be extracted

Copyright ASME International
Provided by IHS under license with ASME
No reproduction or networking permitted without license from IHS
Not for Resale

TABLE 6-3 GASEOUS EMISSIONS MEASUREMENT DATA

1.	Date:	
2.	Time of day:	
3.	Sampling:	Probe design: Sampling location: Sample line type, length, temperature:
4.	Instruments:	Type: Model: Serial no.: Ranges used: Concentration of span gases and analyzer responses: Zero and span checks: Interference corrections: Sample flow and/or sample inlet pressure (FID only):
5.	Exhaust gas volume concentrations, average for each measuring point:	O_2, % measured or calculated CO_2, % measured or calculated H_2O, % measured or calculated (if required) N_2, % measured or calculated (if required) Balance, % measured or calculated (if required)
6.	Emissions volume concentrations, average for each measuring point:	NO_x CO HC (if required) VOC (if required) SO_2 (if required) NH_3 (if required)

before the sample is fed into the analyzers. Emissions and analyzer data to be recorded are shown in Table 6-3.

(*f*) Oxides of nitrogen data also are to be reported in terms of concentration corrected to 15% O_2, and then corrected to ISO conditions as described in Section 10.

(*g*) Analyzers shall be calibrated before and after the test, and at least at 4 hr intervals during the test. With approval of the cognizant regulatory agency, longer periods between calibrations shall be permitted.

(*h*) The entire measurement system is to be checked before the test and at 8 hr intervals. Specific checks for leaks are to be made from the probe to each instrument. Performance checks are to be carried out as required by the applicable quality audit procedure; see para. 6.4.

(*i*) The evaluation of the data and the computation of specific emissions from gas concentrations are to be made using one of the methods given in Section 10.

(*j*) A test report shall be prepared containing the information given in Tables 6-2 and 6-3.

6.3 Instrumentation

The recommended instrumentation for the continuous measurement of each component is given below. Substitute methods are acceptable only if approved by the cognizant regulatory agency and all parties.

6.3.1 Oxides of Nitrogen (NO_x). Oxides of nitrogen, defined as NO plus NO_2, shall be measured using a chemiluminescent analyzer in which light radiation is emitted by the reaction of nitric oxide (NO) and ozone (O_3) and is measured photoelectrically [4]. This method is not sensitive to NO_2 and requires the use of a converter that reduces nitrogen compounds such as NO_2 to NO. Normally the measurement of NO_x will be made with the sample passing through the converter. When the converter is bypassed, only the NO component of the exhaust will

Copyright ASME International
Provided by IHS under license with ASME
No reproduction or networking permitted without license from IHS Not for Resale

TABLE 6-4 PERFORMANCE SPECIFICATIONS FOR NO_x ANALYZER

Total range	0 to 1000 ppm in appropriate ranges
Resolution	Better than 0.5% of full scale of range used or 1 ppm, whichever is greater
Repeatability	Better than ±1% of full scale of range used or ±1 ppm, whichever is greater
Stability	Better than ±2% of full scale of range used in a period of 2 hours
Zero drift	Less than ±1% of full scale of range used or ±1 ppm, whichever is greater in a period of 2 hours
Noise	0.5 Hz and greater, less than ±1% of full scale of range used or ±1 ppm, whichever is greater in a period of 2 hours
Interference	Interferences from CO_2 and water vapor shall be limited to: —less than 0.2% of reading per % of CO_2 concentration —less than 0.5% of reading per % of water vapor concentration —less than 1% of reading per % of NH_3 concentration If the above interference limitations cannot be met, correction factors shall be determined, reported, and applied. It is recommended that these be applied in all cases. Note that other corrections that are unique to the instrument design also may be required.
Response time	Shall not exceed 10 seconds from entry of the sample into the analyzer to 90% of final reading.
Linearity	The linearity of each range shall be checked at the 30, 60, and 90% points using separate gas mixtures or a gas divider. The maximum deviation of these points from a least squares straight line fit shall be ±2% of the full scale value.
Converter	The converter shall be designed and operated to reduce the NO_2 in the sample to NO. The converter efficiency shall not be less than 90%. The converter efficiency shall be determined and used to correct the measured sample NO_2 value to represent 100% converter efficiency.

be measured. The difference between the NO_x measurement and the NO measurement is used to determine the concentration of NO_2.

(*a*) *Performance Specification*. The performance of the analyzer when operated in the manner specified by the manufacturer shall be as given in Table 6-4.

6.3.2 Carbon Monoxide (CO) and Carbon Dioxide (CO_2). Carbon monoxide and carbon dioxide shall be measured using nondispersive infrared (NDIR) analyzers [5]. These analyzers use the differential energy absorption of infrared light in parallel reference and sample gas cells. The required ranges of sensitivity are obtained by the use of stacked sample cells, changes in electronic circuitry, or a combination of both. Interferences from gases with overlapping infrared absorption bands may be minimized by gas absorption filters and/or optical filters.

(*a*) *Performance Specifications*. The performance of the analyzers when operated in the manner specified by the manufacturer shall be as given in Tables 6-5 and 6-6.

(*b*) *Special Requirements*. The recommended method of operation for the CO and CO_2 analyzers is *in parallel* with the other instruments in the measurement system and on a *dry basis* (with the sample train equipped with water traps as shown in Fig. 6.2) and with controlled sample cell inlet pressure and temperature as specified below. Series operation with the SO_2 and O_2 analyzers is acceptable if agreed to in advance by the cognizant regulatory agency.

Temperature:	40°C ±2 (104°F ± 4)
Pressure:	within ±2 mbar (±0.8 in. H_2O)

The operation of the CO and CO_2 analyzers with a wet sample gas is acceptable if the amount of water vapor is limited, as when the gas turbine is operated on light distillate fuel without water or steam injection. In this case, the water vapor interference is to be applied and the sample cell temperature is to be controlled to 50°C ± 2 (122°F ± 4).

Copyright ASME International
Provided by IHS under license with ASME
No reproduction or networking permitted without license from IHS

Not for Resale

TABLE 6-5 PERFORMANCE SPECIFICATIONS FOR CO ANALYZER

Total range	In appropriate ranges 0 to 2500 ppm
Resolution	Better than .5% of full scale of range used or 1 ppm, whichever is greater
Repeatability	Better than ±1% of full scale of range used or ±2 ppm, whichever is greater
Stability	Better than ±2% of full scale of range used or ±2 ppm, whichever is greater in a period of 2 hours
Zero drift	Less than ±1% of full scale of range used or ±2 ppm, whichever is greater in a period of 2 hours
Noise	0.5 Hz and greater, less than ±1% of full scale of range used or ±1 ppm, whichever is greater in a period of 2 hours
Interference	To be limited to CO concentration as follows: (1) less than 500 ppm for each % of ethylene concentration (2) less than 2 ppm for each % of CO_2 concentration If the above interference limitations cannot be met, correction factors shall be determined, reported, and applied. It is recommended that these correction factors be applied in all cases. Note that other corrections that are unique to the instrument design may also be required.
Response time	Shall not exceed 10 seconds from entry of the sample into the analyzer to 90% of final reading.
Linearity	The linearity of each range shall be checked at the 30, 60, and 90% points using separate gas mixtures or a gas divider. The maximum deviation of these points from a least squares straight line fit shall be ±2% of the full scale value.

TABLE 6-6 PERFORMANCE SPECIFICATIONS FOR CO_2 ANALYZER

Total range	0 to 20% in appropriate ranges
Resolution	Better than .5% of full scale of range used or 100 ppm, whichever is less
Repeatability	Better than ±1% of full scale of range used or ±100 ppm, whichever is less
Stability	Better than ±2% of full scale of range used or ±100 ppm, whichever is less in a period of 2 hours
Zero drift	Less than ±1% of full scale of range used or ±100 ppm, whichever is less in a period of 2 hours
Noise	0.5 Hz and greater, less than ±1% of full scale of range used or ±100 ppm, whichever is less
Response time	Shall not exceed 10 seconds from entry of the sample into the analyzer to 90% of final reading.
Linearity	The linearity of each range shall be checked at the 30, 60, and 90% points using separate gas mixtures or a gas divider. The maximum deviation of these points from a least squares straight line fit shall be ±2% of the full scale value.

Copyright ASME International
Provided by IHS under license with ASME
No reproduction or networking permitted without license from IHS
Not for Resale

TABLE 6-7 PERFORMANCE SPECIFICATIONS FOR SO_2 ANALYZER

Total range	0 to 50 and 0 to 250 ppm
Resolution	Better than 2.0% of full scale of range used or ±2 ppm, whichever is greater
Repeatability	Better than ±2% of full scale of range used or ±2 ppm, whichever is greater
Stability	Better than ±3% of full scale of range used or ±1 ppm, whichever is greater in a period of 2 hours
Zero drift	Less than ±2% of full scale of range used or ±1 ppm, whichever is greater in a period of 2 hours
Noise	0.5 Hz and greater, less than ±2% of full scale of range used or ±0.05%, whichever is greater in a period of 2 hours
Interference	Interferences from CO_2, water vapor, and HC shall be limited to: For NDUV instruments: —less than 1% of reading for each 10 ppm of HC, or 4% of reading If the above interference limitations cannot be met, correction factors shall be determined, reported, and applied. It is recommended that these be applied in all cases. Note that other corrections that are unique to the instrument design may also be required.
Response time	Shall not exceed 50 seconds from entry of the sample into the analyzer to 90% of final reading.
Linearity	The linearity of each range shall be checked using SO_2 in N_2 at the 30, 60, and 90% points using separate gas mixtures or a gas divider. The maximum deviation of these points from a least squares straight line fit shall be ±2% of the full scale value.

6.3.3 Sulfur Dioxide (SO_2)

(*a*) *Fuel Analysis — Recommended Method.* It is recommended that *sulfur dioxide be calculated from fuel sulfur content* determined by fuel analysis using ASTM methods or equivalent as approved by the cognizant regulatory agency. Many of these methods are also listed by the USEPA in the New Source Performance Standards for gas turbines [6]. See Section 9, Fuel Analysis, for additional information on sulfur determination in fuels.

(*b*) *Gas Analysis Method.* Sulfur dioxide can be measured on line by using nondispersive ultraviolet (NDUV) analysis [7]. Measurement of SO_2 in the exhaust gas is practical only if the expected concentration exceeds 5 ppm.

(*c*) *Performance Specifications.* The performance of the analyzer when operated in the manner specified by the manufacturer shall be as given in Table 6-7.

(*d*) *Special Requirements.* To avoid interferences due to ammonia in plants operating with selective catalytic reduction (SCR), the measurement of SO_2 shall be made upstream of ammonia injection.

6.3.4 Sulfuric Acid (H_2SO_4) Mist. During the operation of gas turbines on liquid fuels that contain significant amounts of sulfur and with heat extraction in the exhaust (such as a heat recovery steam generator), the exhaust temperature can be reduced to below the condensation point of sulfuric acid. This point, which is a function of its concentration, can be considerably lower than the boiling point of H_2SO_4 (b.p. = approximately 315–338°C; 600–640°F). Under these conditions, the potential for the exhaust of sulfuric acid mist occurs, and some local and state agencies require a specific measurement for H_2SO_4 mist.

(*a*) *Recommended Method.* The recommended method for the measurement of sulfuric acid mist is the *USEPA Method 8* [8]. Method 8 requires the collection of sulfuric acid mist and sulfur trioxide (SO_3) by wet chemistry using an isokinetic sampling

Copyright ASME International
Provided by IHS under license with ASME
No reproduction or networking permitted without license from IHS

Not for Resale

probe and impinger train. The collected sample is measured using a barium-thorin titration method. This method does not provide for on-line analysis of sulfuric acid mist. The method also can be used to determine the amount of SO_2 in the exhaust gas but is not recommended for that purpose.

(*b*) *Sampling*. Sampling is to be done *isokinetically* using the same three sample probe locations as described in para. 6.2.4. Samples shall be extracted equally from each of the three locations until a measurable sample is obtained. The measurement threshold for this method is 0.05 mg/m^3 (0.03×10^{-7} lb/ft^3).

(*c*) *Sampling Train*. The sampling train is similar to that used for USEPA Method 5 except the filter is located behind the first impinger, and the filter holder is unheated. Commercial models of this train are available.

(*d*) *Analysis of Results*. The *results* from this wet chemistry measurement *are not immediately available* as each sample must be taken to the laboratory and titrated for H_2SO_4 and H_2SO_3 contents.

It is recommended that a trial material balance be made using the measured sulfur content of the fuel, as described in para. 6.3.3, and assuming that all the fuel sulfur is converted to H_2SO_4. This trial material balance will provide a maximum expected value for sulfuric acid mist and a guideline for sampling times. If the fuel sulfur content is low enough, compliance may be shown by using a sulfur material balance and the assumption that all fuel sulfur is converted to H_2SO_4.

6.3.5 Total Hydrocarbons (HC). The measurement of total unburned and partially burned hydrocarbon species shall be by flame ionization detection (FID) [9]. When the unburned hydrocarbon gases are subsequently burned in an independently controlled flame, ionization is produced proportional to the number of carbon/hydrogen and carbon/carbon bonds that are broken. This ionization is measured by a change in current between two electrically charged plates positioned on either side of the flame. This technique yields a total of all hydrocarbons present in the sample in terms of the carbon content of the calibration gas that is normally propane (C_3H_8). The measurement of nonmethane hydrocarbons and individual hydrocarbon species is given in para. 6.3.6.

NOTE: The concentration of ambient hydrocarbons will, in some circumstances, be very significant, even higher than that measured in the exhaust gas. To verify, the probe can be used to sample ambient air before and after exhaust emissions testing.

Where significant readings are encountered, it is recommended that a parallel inlet air sampling line be installed near the engine inlet air filter, but not so that it can be induced into the engine and cause damage. This sampling arrangement will allow back-to-back readings between the engine exhaust gas and the inlet air. This sample line need not be heated since the ambient hydrocarbons are in solution in the inlet air at ambient temperature.

(*a*) *Performance Specifications*. The performance of the analyzer when operated in the manner specified by the manufacturer shall be as given in Table 6-8.

(*b*) *Special Requirements*. The sample must be heated through the instrument including the detector.

The flame ionization burner fuel shall be pure (99.999%) hydrogen with a HC content of less than 0.5 ppmC_1. The burner air shall be ultra pure, zero air with a volumetric concentration of organic substances less than 0.1 ppmC_1 or shall cause less than 10% full scale deflection of the range used.

The change in instrument reading with various HC species shall be measured and not exceed 5%, expressed as CH_4, with the following test gases:

For testing at a service facility:	500 ppmC_1 propane in zero air
	500 ppmC_1 propylene in zero air
	500 ppmC_1 toluene in zero air
	500 ppmC_1 n-hexane in zero air

For testing at the site, values of 25, 50, and 100 ppm of methane in air shall be used.

6.3.6 Nonmethane Hydrocarbons (NMHC) and Volatile Organic Compounds (VOC). Nonmethane hydrocarbons (NMHC) are defined as all hydrocarbons measured in or emitted from a given system minus the methane component. Volatile organic compounds (VOC) are commonly defined as all hydrocarbons measured in or emitted from a given system minus both the methane and ethane components. In many instances the term NMHC is used synonymously with VOC.

To determine NMHC, the methane component is measured by gas chromatograph (GC) along with the total hydrocarbons and the ratio of NMHC to total hydrocarbons is obtained [10]. This ratio is applied to the total hydrocarbon measurement made with an

Copyright ASME International
Provided by IHS under license with ASME
No reproduction or networking permitted without license from IHS
Not for Resale

TABLE 6-8 PERFORMANCE SPECIFICATIONS FOR HC ANALYZER

Total range	0 to 1500 ppm C_1 in appropriate ranges including the smallest range of 0 to 10 ppm C_1. To minimize reading error, enough ranges shall be available so that HC can be measured at no less than 50% of full scale deflection of the scale in use.
Resolution	Better than 0.5% of full scale of range used or ±0.5 ppm C_1
Repeatability	Better than ±1% of full scale of range used or ±0.5 ppm C_1, whichever is greater
Stability	Better than ±2% of full scale of range used or ±1 ppm C_1, whichever is greater in a period of 2 hours
Zero drift	Less than ±1% of full scale of range used or ±0.5 ppm C_1, whichever is greater in a period of 2 hours
Noise	0.5 Hz and greater, less than ±1% of full scale of range used or ±0.5 ppm C_1, whichever is greater
Interference	The change of instrument reading with variation of oxygen shall be measured and not exceed 2% with the following test gases: —500 ppm C1/zero air (167 ppm propane/zero air) —500 ppm C1/nitrogen (167 propane/nitrogen)
Response time	Shall not exceed 10 seconds from entry of the sample into the analyzer to 90% of final reading
Linearity	The linearity of each range shall be checked using propane in air at the 30, 60, and 90% points using separate gas mixtures or a gas divider. The maximum deviation of these points from a least squares straight line fit shall be ±2% of the full scale value.

FID, as described in para. 6.3.5, so that the basis for both NMHC and the total HC is the FID measurement. Measurements of the VOC components can be made in a similar manner.

(*a*) *Direct Analyzers*. Direct analyzers provide the capability to differentiate VOC and NMHC in a single instrument consisting of an automated gas chromatograph with an FID detector. The sample is separated in the instrument into two parts: (1) for VOC, air and the sum of methane and ethane; or (2) for NMHC, air and methane. The column is then backflushed giving a third reading that consists of VOC (all other hydrocarbon compounds in the sample). Since the methane, ethane, and VOC are separated from the air, no oxygen synergism occurs. To improve the separation and accelerate the analysis, two columns may be used with suitable flow switching to differentiate VOC in a single instrument. This type of analyzer is recommended where the measurement of total hydrocarbons and VOC or NMHC is required.

(*b*) *Subtraction Analyzers*. If the direct analyzer described above is not available, separate FID and GC instruments can be used to determine the total hydrocarbon and VOC components.

NOTE: For accuracy and consistency, it is recommended that the measurement of total hydrocarbons is always made using an FID, and the proportion of NMHC or VOC determined by the GC.

(*c*) *Performance Specifications*. The performance specifications for a total hydrocarbon analyzer are given in Table 6-8.

(*d*) *Measurement of Specific Hydrocarbon Compounds*. For specific compounds, such as toluene, xylene, and benzene, a mass spectrometer must be connected to the gas chromatograph. The test gas first passes through the gas chromatograph where its components are separated. The discrete components are directed to the mass spectrometer for identification and quantification.

NOTE: The quantities of these specific compounds are expected to be much less than 1 ppm because total hydrocarbon emissions from industrial gas turbines are normally less than 5 ppmC_1.

Copyright ASME International
Provided by IHS under license with ASME
No reproduction or networking permitted without license from IHS

Not for Resale

(*e*) *Special Requirements*. The gas chromatograph should also have the following special requirements:

- Grounded jet and current limited design for operator safety
- Push-button flame ignition
- Fused silica columns insert within 2 mm of jet tip
- Temperature range to 450°C
- Sensitivity: less than 18 mCoul/gm carbon: nitrogen carrier, 0.018 in. id jet
  less than 15 mCoul/gm carbon: helium carrier, 0.015 in. id jet
  less than 22 mCoul/gm carbon: nitrogen carrier, 0.011 in. id capillary jet
  less than 18 mCoul/gm carbon: helium carrier, 0.011 in. id capillary jet
- Minimum detectable response: less than 5 pg carbon/sec, nitrogen carrier as S/N = 2
- Linear dynamic range: less than +10 over 107 range with 0.018 in. id jet
- Operating conditions: Column flow 50 ml/min, 45 ml/min H2, 650 ml/min air propane sample

6.3.7 Ammonia (NH_3). Ammonia is present in the exhaust of gas turbines that use NO_x reduction after treatment such as selected catalytic reduction (SCR) systems and must be measured and controlled. At present there are no recommended commercially available on-line methods of measuring ammonia. Neither accuracy nor stability is satisfactory for the very low concentration levels that must be measured in the exhaust of units operating with SCR systems. However, several methods are near commercial release. The method described below is one that is presently commercially available.

One method of NH_3 measurement is a "difference method" that uses a chemiluminescent analyzer and two designs of converters. Because of their different materials and operating temperatures, the converters react differently to exhaust with NO_2 and NH_3 components. The stainless steel converter operates at 700°C (1292°F), reduces NO_2 to NO, and oxidizes NH_3 to NO according to the reaction:

$$4\,NH_3 + 5\,O_2 \rightarrow 4\,NO + 6\,H_2O$$

Converting the ammonia to nitric oxide produces incorrect NO_x results when NH_3 is present in the exhaust.

The carbon converter operates at 300°C (572°F), at which temperature the NH_3 is not oxidized, but the conversion of NO_2 to NO will take place according to the reaction:

$$NO_2 + C \rightarrow NO + CO$$

Ammonia concentration is measured by taking the difference between the NO reading using the stainless steel converter and the NO reading using the carbon converter.

(*a*) *Performance Specifications*. The equipment required is a chemiluminescent analyzer described in para. 6.3.1 for the measurement of NO_x and two converters, one carbon and one stainless steel, as shown in the schematic diagram of Fig. 6.3. Alternately, two complete chemiluminescent analyzers and converter systems may be used. The operation and specification of the chemiluminescent instrument and the converters shall be the same as described in para. 6.3.1. The converters, their arrangement, and their operation shall be used to oxidize NH_3 and reduce NO_2 respectively to NO. As shown in Fig. 6.3, ammonia concentration is measured by taking the difference between the NO reading produced by each converter.

6.3.8 Oxygen (O_2). The recommended method of measuring the oxygen content of the exhaust gas is by using either an electrochemical analyzer or a paramagnetic analyzer [11].

(*a*) *High Temperature Zirconium Oxide Cell*. This method uses a high temperature electrochemical cell, commonly a zirconium oxide tube heated to 695°C (1283°F) and platinum electrodes. The sample gas flows over the outside of the tube while the reference gas passes through the center. The difference in partial pressure of oxygen between the two gases causes an electromotive force (EMF) to be generated. This EMF is measured and converted to oxygen concentration using the Nernst equation for electrochemical behavior.

(*b*) *Paramagnetic Cell*. O_2 molecules, because of their paramagnetic property, are attracted in a nonhomogeneous magnetic field in the direction of the higher field strength. Two gases having different O_2 concentrations are brought together in a magnetic field generating a pressure difference between them. One of the gases is the sample gas and the other is the reference gas. For gas turbine exhaust measurement, the reference gas used is 20.95% O_2 in N_2. This reference gas is brought into the measuring chamber via two ducts. One of the ducts mixes reference gas with sample gas in the area of the magnetic field causing a pressure differential propor-

Copyright ASME International
Provided by IHS under license with ASME
No reproduction or networking permitted without license from IHS
Not for Resale

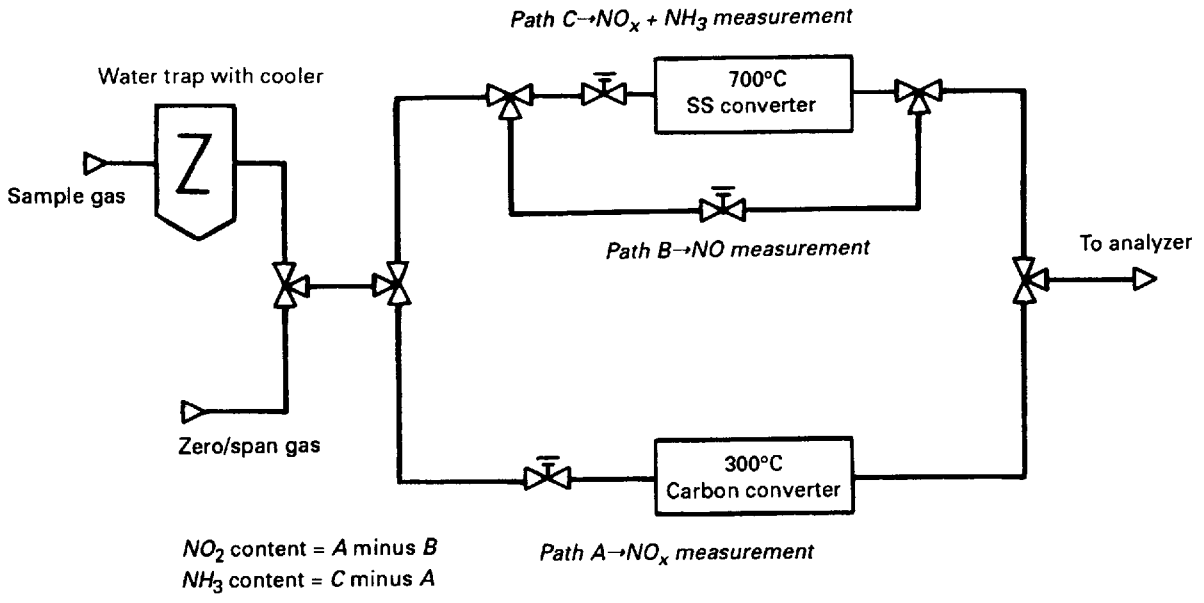

FIG. 6.3 FLOW DIAGRAM OF NO CONVERTERS USED TO OBTAIN NH_3 MEASUREMENT

tional to the O_2 content of the sample. This pressure differential produces a flow that is converted to an electrical signal.

(*c*) *Performance Specifications.* The performance specification for both the electrochemical cell and the paramagnetic cell oxygen analyzers is given in Table 6-9.

It is recommended that oxygen be measured to at least the accuracy stipulated in Table 6-9. This accuracy is required because oxygen measurement errors are amplified when NO_x measurements are corrected to 15% O_2.

(*d*) *Special Requirements.* If a paramagnetic cell analyzer is used, some correction may be required. Most gases exhibit some paramagnetic properties that can affect oxygen readings. These effects are likely to be negligible in relation to overall measurement accuracy but may be taken into account if required and agreed to by the cognizant regulatory agency.

6.3.9 Water Vapor (H_2O). The exhaust from gas turbine engines can contain varying quantities of water vapor from approximately 2 to 15% by volume. The absolute amount depends on the type and quantity of fuel used which produces water vapor as a product of combustion, the absolute humidity of the ambient air ingested, and the quantity of water or steam that is injected into the engine for performance improvement or emission control. Water entering the engine from evaporative inlet coolers and water contained in water/fuel emulsions must also be considered.

(*a*) *Recommended Method.* The quantity of water vapor in the exhaust can be determined by either direct measurement of the exhaust gas or summation of all sources of water vapor in the exhaust. This summation is usually performed on a mass basis (grams of H_2O per gram of exhaust gas). It includes the calculation of the water produced by combustion of the fuel, the measurement of the ambient humidity and its conversion to specific humidity, and the measurement of water injected into the engine from all other sources. Either the measurement or summation method is acceptable. Where direct measurement of water vapor in the exhaust is required, the *recommended method is USEPA Method 4* [12]. Of the two procedures cited in Method 4, only the more accurate "reference method" is recommended because the water vapor measurement is to be used in the emissions calculation. In this method, a gas sample is extracted at a constant rate from the source and moisture is removed from the sample stream and determined either volumetrically or gravimetrically using an impinger train.

All requirements and protocols of Method 4 shall

Copyright ASME International
Provided by IHS under license with ASME
No reproduction or networking permitted without license from IHS
Not for Resale

TABLE 6-9 PERFORMANCE SPECIFICATIONS FOR O_2 ANALYZER

Total range	0 to 25% in appropriate ranges
Resolution	Better than ±0.2% of full scale of range used or ±0.05%, whichever is greater
Repeatability	Better than ±0.2% of full scale of range used or ±0.05%, whichever is greater
Stability	Better than ±2% of full scale of range used or ±0.05%, whichever is greater in a period of 2 hours
Zero drift	Better than ±0.2% of full scale of range used or ±0.05%, whichever is greater in a period of 2 hours
Noise	0.5 Hz and greater, less than ±0.2% of full scale of range used or ±0.05%, whichever is greater in a period of 2 hours
Interference	See special requirements in this Section
Response time	Shall not exceed 10 seconds from entry of the sample into the analyzer to 90% of final reading
Linearity	The linearity of each range shall be checked at the 30, 60, and 90% points using separate gas mixtures or a gas divider. The maximum deviation of these points from a least squares straight line fit shall be ±2% of the full scale value.

be observed except for isokinetic sampling as described below.

(*b*) *Sampling*. Sampling of water vapor is to be done in the stack at a temperature above the boiling point of water so that all the water is in vapor phase, and *isokinetic sampling is not required*. Sampling may be done with the gas sampling probe at the three sample probe locations defined in para. 6.2.4. The probe and sample line temperature shall be maintained above 120°C (248°F) to prevent the condensation of moisture.

A total gas sample of at least 0.6 m^3 (21 scf) shall be taken at a rate no greater than 0.021 m^3/min (0.75 scfm).

(*c*) *Sampling Train*. The sampling train consists of four impingers and is similar to that used for USEPA Method 5, which is shown in Fig. 8.1. The first two impingers must contain known volumes of water, the third shall be empty, and the fourth must contain a known weight of silica gel (or equivalent desiccant).

(*d*) *Analysis of Results*. The results from this method are obtained by measuring the increase in volume of water obtained in the first two impingers, measured to the nearest ml, and the weight gain in the desiccant in the last impinger, measured to the nearest 0.5 g.

When water vapor is measured, not computed, it is recommended that a trial calculation be made to obtain the water vapor content of the exhaust gas. This calculation can be done by summing the amounts of water vapor from the various sources as described previously. The calculated water vapor content will verify the measured value.

6.4 Quality Provisions

The quality of measurement is influenced by the design and installation of the measurement system, the calibration procedures, and the measurement test procedures. The system design and test procedures are described in the preceding paragraphs.

Verification of quality provisions is required by the cognizant regulatory agency; in the United States quality provisions are stipulated by the EPA.

6.4.1 Calibration. Calibration of analyzers shall be done by the admission of calibration gas mixtures at the sampling probe. It is recommended that these mixtures have concentrations of 60 and 90% of the full scale value of the analyzer scale in use. These mixtures shall be prepared in accordance with the protocols listed below depending on the requirements of the cognizant regulatory agency. Certificates of compliance shall be provided by the gas supplier.

Copyright ASME International
Provided by IHS under license with ASME
No reproduction or networking permitted without license from IHS Not for Resale

TABLE 6-10 RECOMMENDED ACCURACY OF CALIBRATION GASES

Analyzer	Gas	Accuracy (Taken in percent of calibration gas value)
HC	Propane in 10 ±1% O_2, balance N_2	±1% or ±0.05 ppm, whichever is greater
HC	Propane in 20.95 ±1% O_2, balance N_2	±1% or ±0.05 ppm, whichever is greater
HC	Propylene in zero air	±1% or ±0.05 ppm, whichever is greater
HC	Toluene in zero air	±1% or ±0.05 ppm, whichever is greater
HC	N-hexane in zero air	±1% or ±0.05 ppm, whichever is greater
CO	CO in N_2	±1% or ±2 ppm, whichever is greater
CO_2	CO_2 in N_2	±1% or ±100 ppm, whichever is greater
NO_x	NO in N_2	±1% or ±1 ppm, whichever is greater
O_2	O_2 in N_2	±0.2% or ±100 ppm, whichever is greater
SO_2	SO_2 in N_2	±1% or ±1 ppm, whichever is greater
NH_3	NH_3 in N_2	±1% or ±1 ppm, whichever is greater

(*a*) ISO Standard 6141 [13]
(*b*) USEPA Traceability Protocols [14]

6.4.2 Recommended Accuracy. The recommended accuracy of the calibration gases is given in Table 6-10.

6.4.3 Special Requirements. The special requirements for calibration mixtures are given below. These mixtures shall be verified or certified by the gas supplier. The field laboratory certification of gases used for interference tests shall meet USEPA Protocol Number 1 [14].

CO and CO_2 calibration gases may be blended singly or as dual component mixtures. Three component mixtures of CO, CO_2, and propane in zero air may be used, provided the stability of the mixture is assured.

Zero gas for the HC analyzer shall be zero air, including artificial air with 20 to 22% O_2 blended with N_2. For the remainder of the analyzers, 100% nitrogen shall be used as the zero gas. Impurities in both kinds of zero gas shall be less than the following concentrations:

(*a*) 1 ppm C
(*b*) 1 ppm CO
(*c*) 100 ppm CO_2
(*d*) 1 ppm NO_x
(*e*) 1 ppm SO_2

6.5 References

[1] "Procedure for the Continuous Sampling and Measurement of Gaseous Emission from Aircraft Gas Turbine Engines," Probe Design Concept, Par. 9.1.1, Aerospace Recommended Practice ARP 1256, Rev. B, Society of Automotive Engineers, Warrendale, PA, August 1991.

[2] "Performance Specification 2 — Specifications and Test Procedures for SO_2 and NO_x Continuous Emission Monitoring Systems in Stationary Sources," Par. 3.2 Reference Method, US Federal Register, Title 40, Part 60, Appendix B, Performance Specification 2.

[3] "Gas Turbines — Acceptance Tests," Par 5. Test operating conditions, International Standard

Copyright ASME International
Provided by IHS under license with ASME
No reproduction or networking permitted without license from IHS
Not for Resale

ISO 2314, International Organization for Standardization, Geneva, Switzerland, 1989.

[4] "Method 20 — Determination of Nitrogen Oxides, Sulfur Dioxide and Diluent Emissions From Stationary Gas Turbines," US Federal Register, Title 40, Part 60, Appendix A, Method 20.

[5] "Method 10 — Determination of Carbon Monoxide Emissions from Stationary Sources," US Federal Register, Title 40, Part 60, Appendix A, Method 10.

[6] "Standards of Performance for Stationary Sources, Subpart GG — Standards of Performance for Stationary Gas Turbines," US Federal Register, Title 40, Part 60, Paragraph 60.335 (d) Test methods and procedures.

[7] "Method 6C — Determination of Sulfur Dioxide Emissions from Stationary Sources (Instrument Analyzer Procedure)," US Federal Register, Title 40, Part 60, Appendix A, Method 6C.

[8] "Method 8 — Determination of Sulfuric Acid Mist and Sulfur Dioxide Emissions from Stationary Sources," US Federal Register, Title 40, Appendix A, Method 8.

[9] "Method 25A — Determination of Total Gaseous Organic Concentration Using a Flame Ionization Analyzer," US Federal Register, Title 40, Part 60, Appendix A, Method 25A.

[10] "Method 18 — Measurement of Gaseous Organic Compound Emissions by Gas Chromatography," US Federal Register, Title 40, Part 60, Appendix A, Method 18.

[11] "Method 3A — Gas Determination of Oxygen and Carbon Dioxide Emissions from Stationary Sources (Instrument Analyzer Procedure)," US Federal Register, Title 40, Part 60, Appendix A, Method 3A.

[12] "Method 4 — Determination of Moisture Content in Stack Gases," US Federal Register, Title 40, Part 60, Appendix A, Method 4.

[13] "Gas analysis — Calibration gas mixtures — Certificate of mixture preparation," ISO 6141, International Standards Organization, Geneva, Switzerland.

[14] "Traceability Protocol for Establishing True Concentrations of Gases Used for Calibrations and Audits of Continuous Source Emission Monitors," Protocol Number 1, Environmental Monitoring Systems Laboratory, Quality Assurance Branch, US Environmental Protection Agency, Research Triangle Park, NC.

General References

"Gas Turbines — Exhaust Gas Emission — Measurement and Evaluation," Draft International Standard 11042-1, ISO/TC 192, International Standards Organization, Geneva, Switzerland, February 1992.

"Exhaust Emissions Measurement Recommendations for Reciprocating Engines and Gas Turbines," CIMAC Number 12, International Council on Combustion Engines, American Society of Mechanical Engineers, 345 East 47th Street, New York, NY 10017.

7 SMOKE MEASUREMENT

Smoke emitted from gas turbines is evaluated in two general ways: visible plume opacity and measured carbon (soot) content in the exhaust. Gas turbines operating on natural gas will normally have no visible smoke in the exhaust.

7.1 Visual Opacity

7.1.1 Current Method. Currently, visual determination using USEPA Method 9 [1] is the only accepted and practical method of determining the visual opacity of the exhaust plume of a gas turbine installation. This method does not produce results of acceptable accuracy or repeatability when measuring visual opacity values less than 20%.

USEPA Method 9AM-1 [2] using LIDAR (laser radar; Light Detection and Ranging) is also available, but it requires expensive equipment and is not recommended for measuring the opacity of plumes from gas turbines during normal source testing.

Method 9 requires that a trained, qualified observer holding a USEPA valid certificate make and record one or more sets of visual observations of the exhaust plume at each operating point. A set consists of 24 observations made to the nearest 5% opacity at 15 sec intervals. They represent the highest opacity observed in the plume, averaged over each 15 sec interval when the observer is standing with the sun at his back. Each observation is recorded and all 24 are averaged to determine the opacity for the set.

7.1.2 Measurement Variability. The positive error of Method 9 is given by the EPA for black plumes (such as those from gas turbines) based on field trials. In a trial of 133 sets (over 3000 readings), 99% of the readings were with a positive error of less than 5% opacity. Subsequent evaluation of

Copyright ASME International
Provided by IHS under license with ASME
No reproduction or networking permitted without license from IHS
Not for Resale

ASME B133.9 94 ■ 0759670 0543728 341 ■

the Method made during certification training [3] shows that at 20% opacity the standard deviation of trained observers was 5.25% opacity, and at 10% opacity the deviation was 3.16%.

Because of the high variability in the measurement of visual opacity, compliance difficulties can be expected in the case of a marginal installation with low opacity. Referee measurements of smoke density using a smokemeter (described below) or of stack opacity using a transmissometer [4] made simultaneously with visual opacity during compliance testing are recommended. This procedure must be coordinated with and agreed to by the cognizant regulatory agency, so that if questioned, compliance during routine operation of the engine can be demonstrated using the referee method.

7.2 Smoke Density

In Europe and other regions, measurement of the smoke content of the exhaust is required. The smoke density can be measured using two different methods: an optical smokemeter, or smoke spot method. In the optical smokemeter method a metered flow of exhaust is extracted and passed continuously through a cell that measures its light obscuration. In the smoke spot method a metered quantity of exhaust is passed through a white paper filter. The resulting stain is graded visually or by reflectometer for density using a scale showing varying degrees of gray to black.

All such methods produce a result related to the carbon density in the exhaust gas. In spot filtration, control of the sample extraction and transport to the instrument, design of the instrument and its seals, mass of sample used, filter media, and grading of the stain all vary from method to method, as do the precision and sophistication of the methods themselves. Spot filtration methods often specified for use with gas turbines are as follows:

Spot Filtration Method	Specified by
SAE Aircraft Method	International Civil Aviation Organization [5]
ISO (Bacharach)	ISO Draft International Standard 11042-1 [6]
ASTM D2156	CIMAC Specification No 12 [7]

(*a*) *Smoke Density Measurement Methods.* No smoke measurement methods are recommended since all methods lack either the required accuracy for the measurement of very low smoke density or commercial availability. Two methods are described in detail below: the SAE Aircraft method, which uses spot filtration; and an alternate method, the optical smokemeter, which provides direct on-line measurements. Both of these methods were developed for gas turbines operating on liquid fuels and are currently used worldwide. They provide the best control of variables and the greatest accuracy of measurement.

7.2.1 SAE Aircraft Method. The smoke measurement method recommended by International Civil Aviation Organization is described in more detail in SAE ARP 1179B [8]. It measures smoke density of gas turbine exhaust by spot filtration. A smoke number (S/N) scale of 1 to 100 has been established for these readings, 0 representing no detectable smoke and 100, a blackened filter. This method is recognized internationally and is specified by the USEPA, the US Federal Aviation Administration, and the ICAO for smoke measurement from gas turbine aircraft engines.

(*a*) *Method.* A representative sample is extracted from the exhaust stream through a heated sample line and passed through a filter made of No. 4 Whatman filter paper, a pump, a gas rotameter, and a gas volume meter. During this process, sample line flow rate and temperature are maintained, the sample volume is controlled, and the temperature and pressure of the sample are measured. A schematic drawing of the apparatus is shown in Fig. 7.1.

Sample flow rate:	14 L/min. ± 0.5 (0.50 cfm ± 0.02)
Sample mass:	12 to 21 kg of exhaust gas/m^2 (0.017 to 0.030 lb/in^2) of filter area
Sample line temperature:	60–175°C (140–347°F); ±15°C (±27°F) during measurement

(*b*) *Instrumentation.* Various versions of commercial and individually designed and fabricated instruments are in use today. Each of these instruments meet the design requirements stipulated in ARP 1179.

(*c*) *Testing, Analysis, and Reporting.* The engine is allowed to stabilize at the desired operating point. A minimum of three samples is taken and graded optically using a reflectometer conforming to ANSI Standard PH 2.17. The reflectance of each spot is calculated as follows:

$$SN' = 100[1 - Rs/Rw]$$

where:

SN' = reflectance of each spot
Rs = absolute reflectance of the sample spot
Rw = absolute reflectance of clean filter material

Copyright ASME International
Provided by IHS under license with ASME
No reproduction or networking permitted without license from IHS
Not for Resale

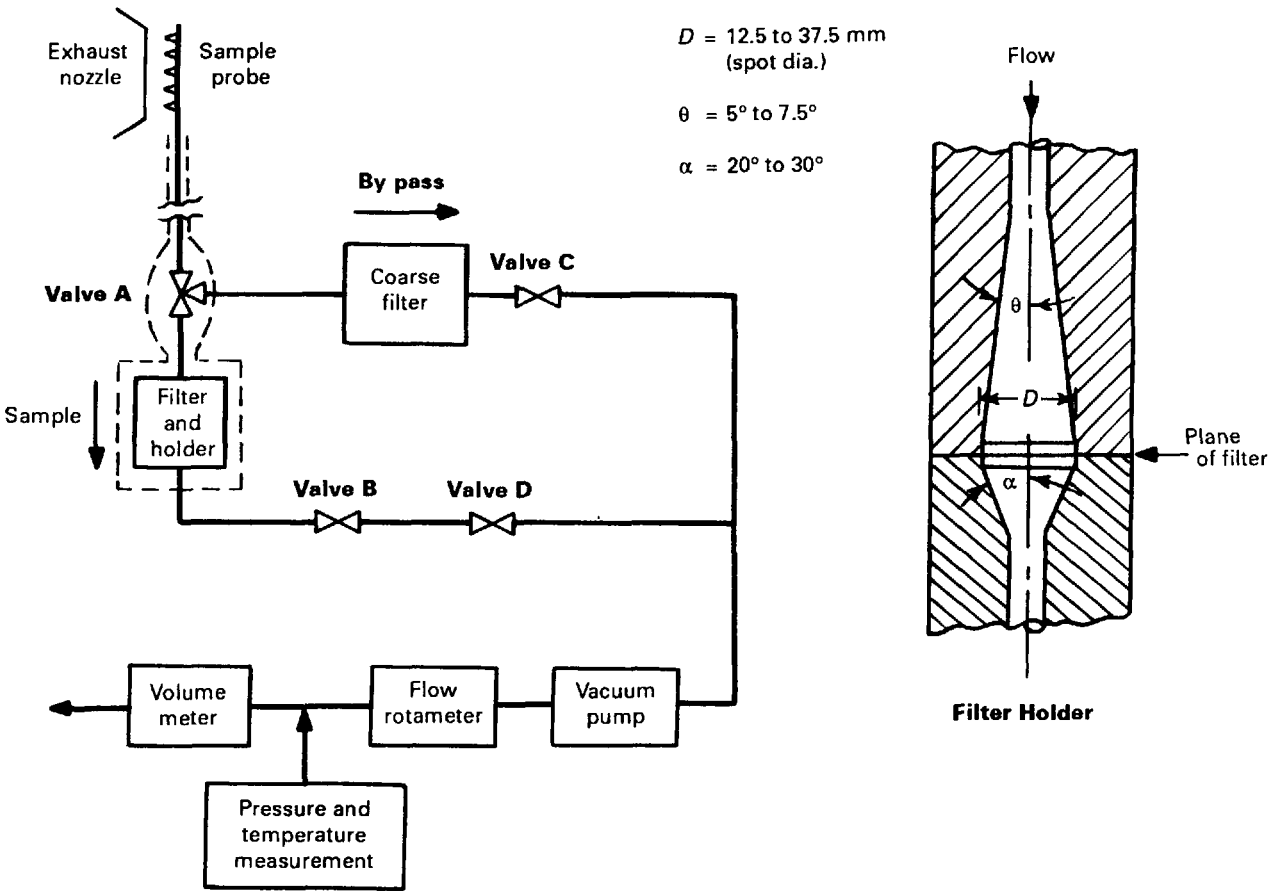

FIG. 7.1 ICAO SMOKE ANALYSIS SYSTEM

The sample mass per unit spot filter area for each sample is calculated and the results plotted on semi-logarithmic coordinates. The overall *SN* for a given operating point is determined by the intercept of the data plotted as a straight line by the method of least squares and the value of 16.6 kg/m^2 (0.0230 lb/in^2) sample mass per unit filter area.

NOTE: Precision of this method is stated as ±3 *SN* values.

7.2.2 Optical Smokemeter. The optical smokemeter measures smoke particulate levels within the exhaust gas. It provides for continuous on-line measurement of the light obscuration of a sample of the exhaust from the engine [9].

(*a*) *Method.* The exhaust sample shall be fed into a self-contained instrument that measures light obscuration in the range of 0 to 10%. The instrument shall provide a direct, continuous readout of SAE Smoke Number. It shall also provide at least one other output channel that can be calibrated by the user in units of ASTM Smoke Density, Bacharach, or carbon particulate mass in micrograms per liter. Provisions shall be made for recorder output.

(*b*) *Performance Specifications*

Primary output:	0–80 SAE smoke numbers
Alternate output:	0–8 Bacharach smoke spot numbers
	0–20 micrograms per liter (mg/cu cm) carbon particulate
Precision:	less than 1 SAE smoke number
Response:	less than 10 seconds to 95% of reading

(*c*) *Testing and Reporting.* A representative sample of exhaust gas is extracted using a three-holed probe designed similarly to that used for gas sampling described in para. 6.2. The engine and sampling line shall be stabilized before smoke measurement begins. A minimum of three samples shall be

Copyright ASME International
Provided by IHS under license with ASME
No reproduction or networking permitted without license from IHS
Not for Resale

recorded at each measuring point and the average of these samples reported.

7.2.3 Other Methods. If it is a requirement to report smoke density in terms of Bacharach number or ASTM smoke spot number, it is recommended that either the SAE smoke number procedure or the optical smokemeter described above be used. These methods should be adjusted to the correct smoke scale by the use of correlation curves developed by the engine manufacturer, or in the case of the SAE method, by modifying the sample size to provide the appropriate sample mass per square inch of filter area.

	Sample mass per unit filter area kg/m² (lb/sq in)
SAE ARP 1179	16.6 (0.0230)
ASTM D2156 and ISO 11042-1	70.1 (0.0997)

7.3 References

[1] "Method 9 — Visual Determination of the Opacity of Emissions from Stationary Sources," 40 CFR, Part 60, Appendix A, Method 9.

[2] "Alternate Method 1 — Determination of the Opacity of Emissions From Stationary Sources Remotely by LIDAR," 40 CFR, Part 60, Appendix A, Method 9, AM1.

[3] Heinsohn, R. J., Davis, J. W., and Anderson, G. W., "Individual Accuracy in Estimating Plume Opacity," *Journal of Air and Waste Management*, Vol. 42:443, April 1992.

[4] "Performance Specification 1 — Specifications and Test Procedures for Opacity Continuous Emissions Monitoring Systems in Stationary Sources," 40 CFR, Part 60, Appendix B, Spec. 1.

[5] "International Standards and Recommended Practices, Environmental Protection," Annex 16, Volume II, Aircraft Engine Emissions, International Civil Aviation Organization, Montreal, Canada.

[6] "Gas Turbines — Exhaust Gas Emission — Measurement and Evaluation," Draft International Standard 11042-1, ISO/TC 192, International Standards Organization, Geneva, Switzerland, 1992.

[7] "Exhaust Emissions Measurement Recommendations for Reciprocating Engines and Gas Turbines," CIMAC Number 12, International Council on Combustion Engines.

[8] "Aircraft Gas Turbine Exhaust Smoke Measurement," Aerospace Recommended Practice ARP1179, Rev. B, Society of Automotive Engineers, Warrendale, PA, April 1991.

[9] "Rolls-Royce Optical Smokemeter Performance Specification," Rolls-Royce plc, Derby, England.

8 PARTICULATE MEASUREMENT

The measurement of particulate material (PM) is frequently required by state and local agencies in the United States if the gas turbine is run on liquid fuel. This measurement method is recommended for engines operating on light distillate fuel oil such as ASTM No. 2-GT, which contains no residual components.

NOTE: In some cases the measurement of PM has been required when an engine is run on natural gas. The level of material resulting from combustion in the exhaust stream is below the practical threshold of measurement. For this reason *the measurement of particulates from engines operated on natural gas is not recommended.*

8.1 Recommended Method

The recommended method for the measurement of particulates from gas turbines operating on distillate fuel oil is a *modification of USEPA Method 5* [1]. Method 5 is a gravimetric method that uses a specially designed probe, filter, and impinger system to extract samples of the solid and condensable materials from the exhaust stream. Water, a major condensate, is not considered a particulate and is not counted. Method 5 is modified for use in measuring gas turbines by the following:

(*a*) eliminating isokinetic sampling

(*b*) reducing the number of traverse points to three

(*c*) eliminating velocity traversing of the exhaust duct

These modifications are made to reduce the difficulty of testing and to improve the accuracy of measurements. Eliminating isokinetic sampling is possible because the carbon particles generated are submicronic and follow flow lines. The reduction of traverse points is possible because of the uniform mixing of the exhaust stream in industrial turbine installations. The precision of the carbon balance method of mass flow determination is superior to the duct velocity traverse and replaces it.

Engines operating on fuel oils other than light distillate oils may require a fuel analysis to determine

Copyright ASME International
Provided by IHS under license with ASME
No reproduction or networking permitted without license from IHS

Not for Resale

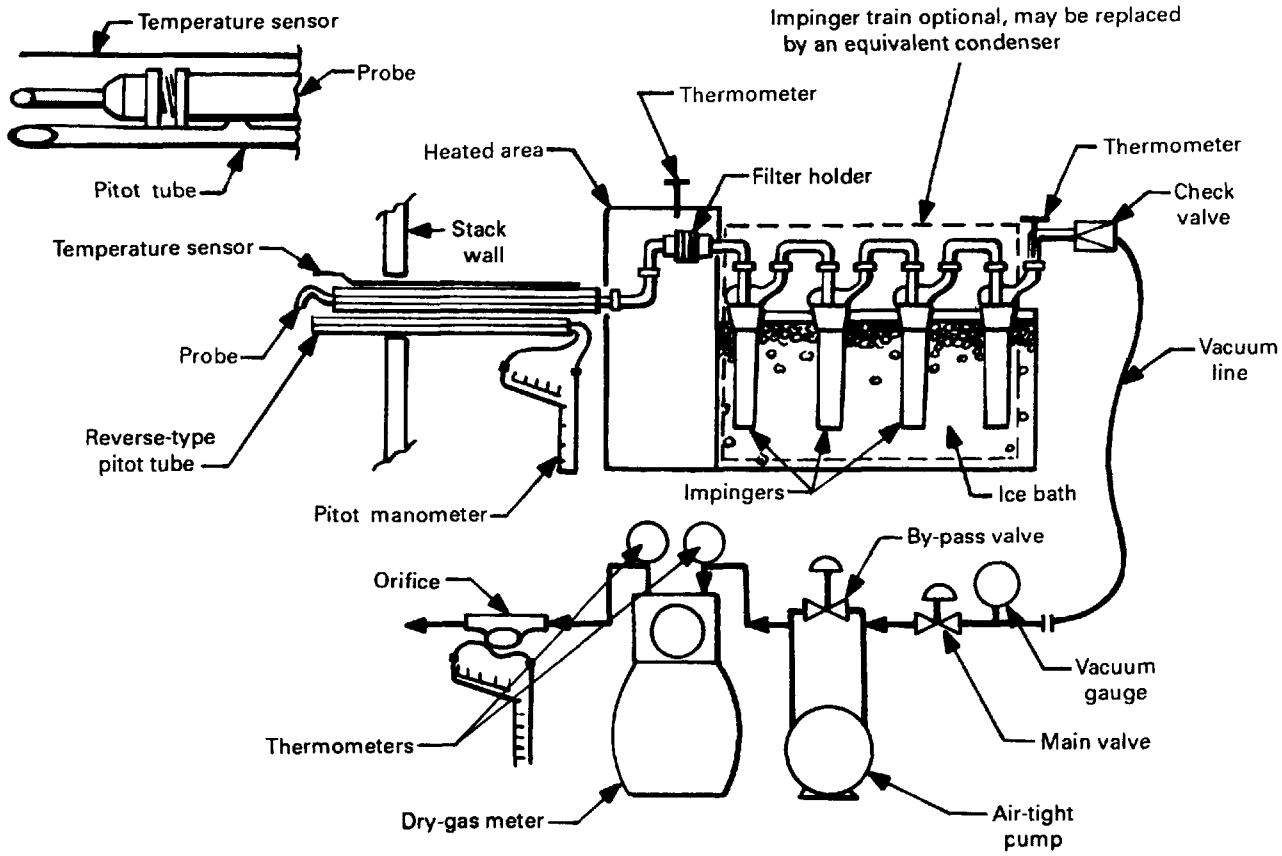

FIG. 8.1 SCHEMATIC OF IMPINGER TRAIN

the presence of contaminants or trace metals [2], which form particulates during combustion. Under these circumstances, the use of Method 5 without modification may be required.

8.2 Sampling Train

A schematic of the sampling apparatus is given in Fig. 8.1. This apparatus is identical to that defined in detail in Method 5 and consists of a stainless steel or glass probe nozzle; a glass or quartz probe liner; a heated filter holder; an impinger train; and flow metering, pumping, and measuring equipment.

8.3 Sampling Procedure

As in the measurement of gases (Section 6), a single sampling plane is adequate for measurement of particulates. Three sampling locations, positioned normal to the exhaust flow, are required. These sampling points are to be located by establishing a measurement line through the centroid of the area of the duct at the measurement plane and in the direction of any expected stratification. The location of three sampling points shall be at 16.7, 50, and 83.3% of the length of the measurement line. These sampling points are identical to the ones used for the measurement of gaseous emissions previously described in para. 6.2.

Sampling shall be made equally from each of the three locations for a total of one hour or until a minimum of 20 mg of sample is extracted, whichever is greater. Because of the submicronic nature of gas turbine particulate, *isokinetic sampling is not required*. The sample mass will be determined by the amount of material collected on the filter and the material extracted from the probe wash. All protocols given in Method 5 shall be observed with regard to temperatures, flows, sample handling, extraction and weighing, and meter calibration. Because isokinetic sampling is not necessary, the flow rate of the sample through the probe and sample train may

Copyright ASME International
Provided by IHS under license with ASME
No reproduction or networking permitted without license from IHS Not for Resale

be increased to provide reduced sample collection times.

NOTE: Because the protocol for the measurement of particulates is a complex, multistep field and laboratory procedure and because the modern gas turbine is a low emission source, it is recommended that only laboratories having proven experience in the measurement of PM from gas turbines be chosen.

8.4 Analysis of Results

The results of particulate measurements are expressed in terms of grams per cubic meter (pounds per cubic foot) of exhaust flow. These units can be converted to emission rate (kg/hr or lb/hr) by multiplying by the engine flow rate. The flow rate can be determined by carbon balance and/or the manufacturer's engine performance deck that has been corrected to test conditions. Engine mass flow determination using the carbon balance procedure is described in para. 10.3.

The particulate material that has been collected and weighed will consist of submicronic carbon particles (smoke), some but not all of the hydrocarbons emitted by the engine, and some of the sulfates from the combustion of the fuel. These materials are collected on the probe and filter. Also included in the particulate catch will be minute fractions of airborne solids and condensable liquids that enter the engine inlet. If unexpectedly large PM mass values are obtained during the testing, the source of the material must be isolated and controlled. While the determination of the cause of high particulate emissions is not within the scope of this Standard, past experience shows that some of the likely causes of high particulate emissions are as follows:

(*a*) poor quality or contaminated fuel
(*b*) dirty inlet air or air filters
(*c*) erosion of inlet or exhaust duct walls
(*d*) dirty fuel nozzles
(*e*) engine internal oil leaks
(*f*) incorrect measurement practice
(*g*) use of stainless steel probes for simple cycle (high exhaust temperature) engines

8.5 References

[1] "Method 5 — Determination of Particulate Emissions from Stationary Sources," US Federal Register, Title 40, Part 60, Appendix A, Method 5.

[2] Standard Specification for Gas Turbine Fuel Oils, ASTM Designation D 2880, American Society for Testing and Materials, Philadelphia, PA.

9 FUEL ANALYSIS

The sampling and analysis of the fuel used during emissions testing is a significant part of the test program because it determines fuel characteristics governing the test results as follows:

(*a*) heating value used in determining specific emissions of mass per unit heating value;

(*b*) hydrogen-to-carbon ratio used in stoichiometric calculation for the carbon balance and mass flow determinations;

(*c*) presence and concentration of contaminants that can contribute to air pollution from the engine;

(*d*) physical characteristics controlling smoke and particulate formation;

(*e*) specification compliance to determine if the fuel meets contract requirements.

This Standard applies only to engines operating on natural gas and light distillate oils. Emissions testing using fuels other than these will require special attention to fuel analysis and emissions measurement due to the possibility of the presence of larger amounts of fuel contaminants.

9.1 Recommended Sampling Procedure

The fuel to be used during the emissions testing should be sampled at least once several weeks before the testing begins. Adequate time should be allowed before emissions testing for laboratory analysis and review of results.

It is recommended that fuel be *sampled at the engine* at least twice during the emissions test, once near the beginning and once near the end. Dual samples should be taken: one to be used for analysis, and one to be held for record and possible future use. The quantity of each sample to be taken should be determined by the analysis laboratory. Normally, approximately one liter of liquid fuel and several liters of gaseous fuel are adequate samples.

Special cases apply when the fuel used during the test is expected to vary due to changes in supply. Because they add variability to the test which is difficult to compensate, these changes are not desirable. When testing using liquid fuels, changing fuel supply tanks or adding fuel to the tank in use requires that additional samples be taken. Gaseous fuels sometimes vary due to blending of other gases into the natural gas by local companies. If this blending is expected, periodic sampling during the test may be necessary. Coordination of the emissions test plan with the fuel supplier is required.

Copyright ASME International
Provided by IHS under license with ASME
No reproduction or networking permitted without license from IHS
Not for Resale

TABLE 9-1 SUMMARY OF FUEL ANALYSIS METHODS

Fuel	Characteristic	Method
Natural gas	Sampling	ASTM D 1145D
	Composition	Gas chromatography ASTM D 1945
	Calorific value	Calculation ASTM D 3588
	Contaminants	Sulfur compounds ASTM D 1072; D 2725; D 3031; D 3246; D4084; D4294. Solids, ammonia, and hydrocarbons see ANSI B133.7
Liquid distillates	Listed below	Detail Methods given below are from Standard Specification for Gas Turbine Fuel Oils, ASTM D 2880
	Sulfur	D 129 (Referee method), D 1266 (only for fuel grades 0-GT & 1-GT); D 1552; D 2622; D 4294
	Trace metals	Atomic absorption D 3605
	Density, API gravity	Hydrometer D 1298
	Distillation	D 86
	Fuel Bound Nitrogen	ASTM 4629 (3)
	Viscosity	Kinematic D 445

9.2 Fuel Test Methods

Gas turbine fuel analysis methods are defined by ANSI/ASTM and specified in ANSI B133.3 [1] and ISO 4261 [2]. Table 9-1 summarizes some of the tests required. Detailed analytical procedures improve rapidly; consultation with a certified test laboratory with experience in fuels testing is recommended.

The applicable ranges of some of the methods stated above may not be adequate to measure the levels of sulfur in some fuel gases. Dilution of samples before analysis (with verification of the dilution ratio) may be used, subject to the approval of the cognizant regulatory agency.

9.3 References

[1] "Gas Turbine Fuels," ANSI/ASME B133.7M—1985, American Society of Mechanical Engineers, United Engineering Center, 345 East 47th Street, New York, NY 10017.

[2] "Petroleum products — Fuels (class F) — Gas turbine fuels for industrial and marine applications," (Specification to be published), ISO 4261 ___, International Standards Organization, Geneva, Switzerland.

[3] "Standard Test Method for Organically Bound Trace Nitrogen in Liquid Petroleum Hydrocarbons By Oxidative Combustion and Chemiluminescence Detection," ASTM Designation D 4629-91, American Society for Testing and Materials, Philadelphia, PA.

Copyright ASME International
Provided by IHS under license with ASME
No reproduction or networking permitted without license from IHS
Not for Resale

10 CALCULATIONS AND CONVERSIONS

The following Section provides procedures for emission calculations so that measured concentrations can be converted into the engineering units required to show compliance with applicable regulations.

It is recommended that all measurements and calculations be cross-checked and that corrections for analyzer interferences be applied before computation and conversion of data.

10.1 Basic Assumptions

In this Section, the following assumptions are made:

(*a*) The gaseous components are considered to be "ideal," hence the molar concentration of each is proportional to its volume fraction and to the ratio of the partial pressure over the total pressure of the gas mixture.

(*b*) Complete combustion is assumed in the calculations. If incomplete combustion products (CO and HC) are present in the exhaust at higher concentrations than are normally expected, a correction of oxygen, carbon dioxide, and exhaust gas volume may be required.

(*c*) The concentration of oxygen in dry air is assumed to be 20.95%, per ISO 2533 [1].

(*d*) Steam or water injection rates are to be taken into account in the calculation for wet exhaust as well as humidity and the water vapor due to combustion.

(*e*) All sulfur is burned to sulfur dioxide; and fuel bound nitrogen converts to nitric oxide.

10.2 Symbols and Units

TABLE 10-1 GENERAL SYMBOLS

Symbols	Description	Units
c_i	concentration of component (i)	mg/m^3, ppm
$c_{i,\ 15\%O_2\ dry}$	concentration of component (i), corrected to 15% O_2, dry	mg/m^3, ppm
m_i	mass of component (i)	kg, lb
$\dot{m}_i$	mass flow of component (i)	kg/hr, lb/hr
$\dot{m}_E$	exhaust gas mass flow	kg/s, lb/s
P_{amb}	barometric pressure	bar, psia
ϕ_r	relative humidity	%
w_i	mass fraction of component (i)	mg/kg, lb/lb
EB_i	mass of emittant (i), per brake horsepower hour	g/BHPhr, lb/BHPhr
EH_i	mass of emittant (i), per unit heat input	g/GJ, lb/mmBtu
EP_i	mass of emittant (i)) per unit of work output	g/kW, lb/kW
F	Stoichiometric factor (F factor)	scm/J, scf/10^{6}Btu
F/A	fuel to air mass ratio	kg/kg, lb/lb
H_{obs}	humidity of ambient air	kg H_2O/kg dry air, lb/lb
HHV	fuel higher heating value	kJ/kg, Btu/lb
LHV	fuel lower heating value	kJ/kg, Btu/lb
M_E	molecular mass of exhaust	kg/kmol
M_i	molecular mass of component (i)	kg/kmol
P	power output	kW, MW, MWe
V_{exh}	exhaust gas volume	m^3, ft^3
T	temperature	K, °F
ρ_i	density of component (i)	kg/m^3, lb/ft^3
φ_i	volume fraction of gas component (i)	%, cm^3/m^3, ppm

Copyright ASME International
Provided by IHS under license with ASME
No reproduction or networking permitted without license from IHS

Not for Resale

TABLE 10-2 SUBSCRIPTS AND INDICES

Symbol	Description
amb	ambient
dry	dry
e	electrical, refers to power
E	exhaust gas
i	refers to *i*th component
m	molar
n	normal condition; p_n = 1.01325 bar, T_n = 0°C
obs	observed
wet	wet

TABLE 10-3 CHEMICAL SYMBOLS

Symbol	Chemical Description
C	Carbon
CO	Carbon monoxide
CO_2	Carbon dioxide
H	Hydrogen
H_2O	Water
N	Nitrogen
NH_3	Ammonia
NO	Nitric oxide
NO_2	Nitrogen dioxide
NO_x	NO plus NO_2
O	Oxygen
S	Sulfur
SO_2	Sulfur dioxide
SO_x	Oxides of sulfur
HC	Total hydrocarbons
NMHC	Nonmethane hydrocarbons (total HC minus CH_4)
VOC	Volatile organic compounds (total HC minus CH_4 and C_2H_6)

10.3 Determination of Engine Exhaust Flow Rate

It is recommended that the engine exhaust flow rate be computed using the measured engine fuel flow rate and the fuel-to-air ratio (F/A), which has been determined from stoichiometric analysis of the engine exhaust gas. This analysis is based on a carbon balance using the ultimate analysis of the fuel and the measurement of carbon constituents in the exhaust gas (carbon dioxide, carbon monoxide, and hydrocarbons). The computed exhaust flow rate is to be verified by the exhaust flow rate obtained from the engine manufacturer's performance deck run at site conditions. Agreement between the two exhaust flows shall be within ±5%.

A number of computational methods, based on the above principles, are used to determine engine mass flow; two of these are outlined below. Others may be used subject to agreement of the cognizant regulatory agency.

NOTE: The use of a velocity traverse to measure engine exhaust flow rate is not recommended.

Because of the large secondary flow components typical of the exhaust from a gas turbine engine, the use of velocity traverse using pitotstatic velocity flow measurements described in USEPA Method 2 [2] often leads to erroneous exhaust mass flow readings. These errors are due to poor gas flow distribution combined with nonparallel flow at the measurement plane and misalignment of the pitot tube caused by high stack velocities. The above conditions cause the velocity measurements of Method 2 and the emission rates computed from these data to be too high.

Copyright ASME International
Provided by IHS under license with ASME
No reproduction or networking permitted without license from IHS Not for Resale

10.3.1 USEPA *F* Factor Method. The volumetric flow rate, the mass flow rate, and the mass emission rates of each of the constituents of the exhaust gas of a stationary gas turbine can be determined from mass balance calculations using measurements of the fuel flow rate, the fuel ultimate analysis, and exhaust gas concentrations of O_2 and CO_2. The "*F* factor" or fuel stoichiometric factor method of determining these rates is specified in EPA Methods 19 and 20 [3, 4].

(*a*) *F Factor Defined.* The fuel stoichiometric factor (*F*) is the ratio of the standard volume of the products of combustion to the higher calorific value (heat content) of a fuel where:

$$F = \frac{\text{scm}}{\text{J}} \quad \text{or} \quad \frac{\text{scf}}{10^6\ \text{Btu}}$$

F is also specified relative to the O_2 and CO_2 content of the dry exhaust gas as:

$$F_{O_2,\text{dry}} \quad \text{and} \quad F_{CO_2,\text{dry}}$$

F factors are given in Method 19 [3] in both SI and English units and relative to both dry and wet exhaust gas.

(*b*) *Computation of F.* The equations given in Method 19 for computation of *F* are shown below. The derivation of the *F* factor is given by Shigehara [5] and is based on the ultimate analysis and the higher heating value of fuels.

$$F_{O_2,\text{dry}}\left(\frac{\text{scm}}{\text{J}}\right) = \text{K}\left[\frac{(22.7 \times \%\text{H} + 9.57 \times \%\text{C} + 3.54 \times \%\text{S} + 0.86 \times \%\text{N} - 2.85 \times \%\text{O})\left(\frac{\text{scm}}{\text{kg}}\right)}{HHV\left(\frac{\text{kJ}}{\text{kg}}\right)}\right]$$

$$F_{O_2,\text{dry}}\left(\frac{\text{scf}}{10^6\ \text{Btu}}\right) = \text{K}\left[\frac{(3.64 \times \%\text{H} + 1.53 \times \%\text{C} + 0.57 \times \%\text{S} + 0.14 \times \%\text{N} - 0.46 \times \%\text{O})\left(\frac{\text{scf}}{\text{lb}}\right)}{HHV\left(\frac{\text{Btu}}{\text{lb}}\right)}\right]$$

$$F_{CO_2,\text{dry}}\left(\frac{\text{scm}}{\text{J}}\right) = \text{K}\left[\frac{2.0 \times \%\text{C}\left(\frac{\text{scm}}{\text{kg}}\right)}{HHV\left(\frac{\text{kJ}}{\text{kg}}\right)}\right]$$

$$F_{CO_2,\text{dry}}\left(\frac{\text{scf}}{10^6\ \text{Btu}}\right) = \text{K}\left[\frac{0.321 \times \%\text{C}\left(\frac{\text{scf}}{\text{lb}}\right)}{HHV\left(\frac{\text{Btu}}{\text{lb}}\right)}\right]$$

$$K = \left[\frac{10^{-5}\left(\frac{\text{kJ}}{\text{J}}\right)}{\%}\right] \text{metric}; \quad \left[\frac{10^6\ \text{Btu}}{\text{million Btu}}\right] \text{english}$$

Copyright ASME International
Provided by IHS under license with ASME
No reproduction or networking permitted without license from IHS
Not for Resale

For distillate oils and natural gas fuels, the value for F is expected to vary ±3 to 5%. Table 10-4 gives the average and the variation in F values for these fuels based on a number of samples. For the accurate measurement of exhaust components, it is recommended that F be calculated based on the ultimate analysis and *HHV* of the fuel samples obtained during the emissions testing.

TABLE 10-4 AVERAGE *F* FACTORS

	F oxygen, dry		*F* carbon dioxide, dry	
Fuel Type	**dscm/J**	**dscf/10^6 Btu**	**dscm/J**	**dscf/10^6 Btu**
Oil	2.47×10^{-7} ±3.0%	9190 ±3.0%	0.383×10^{-7} ±5.1%	1420 ±5.1%
Natural gas	2.43×10^{-7} ±2.2%	8710 ±2.2%	0.287×10^{-7} ±3.9%	1040 ±3.9%

(*c*) *Emission Rates.* Emission rates in units of mass per unit of energy (ng/J or lb/10^6 Btu) can be calculated for the various components by multiplying the measured concentration by the appropriate F factor.

$$EH_i = c_i \times F_{O_2,dry}\left(\frac{20.95}{20.95 - \%O_2}\right) \quad \text{or} \quad EH_i = c_i \times F_{CO_2,dry}\left(\frac{100}{\%CO_{2,dry}}\right)$$

In this equation, concentration (c_i) is expressed in mass per standard unit volume (ng/scm or lb/scf). Table 10-5 gives conversions from parts per million to mass per unit volume for common gaseous pollutants.

TABLE 10-5 CONVERSION FACTORS FOR CONCENTRATION

From	To	Multiply by
g/scm	ng/scm	10^9
lb/scf	ng/scm	1.602×10^{13}
ppm SO_2	lb/scf	1.660×10^{-7}
ppm CH_4	lb/scf	0.338×10^{-7}
ppm NO_2	lb/scf	1.194×10^{-7}
ppm CO	lb/scf	0.726×10^{-7}

Emission rates in terms of mass per unit time can be calculated by multiplying EH_i by the measured fuel flow rate.

$$\dot{m}_i\left(\frac{kg}{hr}\right) \quad \text{or} \quad \left(\frac{lb}{hr}\right) = EH_i \times \dot{m}_{fuel} \times HHV$$

10.3.2 ICAO (SAE) Method. This method, sometimes referred to as the fuel based method, is used to determine the mass rate of emissions of aircraft gas turbines during emissions certification testing [6]. It uses the solution of the general equation for the combustion of hydrocarbons, the fuel molecular hydrogen-to-carbon ratio, and the measured values of CO, CO_2, and HC to determine the fuel-to-air mass ratio of the engine. Using this method, the following equations would apply:

$$F/A \text{ (from stoichiometry)} = \frac{\dot{m}_{fuel}}{\dot{m}_{air}}$$

$$\dot{m}_{E_{wet}} = \dot{m}_{fuel} + \dot{m}_{air} + \dot{m}_{H_2O}$$

Copyright ASME International
Provided by IHS under license with ASME
No reproduction or networking permitted without license from IHS Not for Resale

$$\dot{m}_E = \dot{m}_{\text{fuel}} + \frac{\dot{m}_{\text{fuel}}}{F/A}$$

10.4 Conversion Between Wet and Dry Exhaust

Measurements are considered dry when the water content of the exhaust sample has been removed. The water content can be measured or computed. Conversion between wet and dry exhaust can be made as follows:

$$c_{i,\text{dry}} = c_{i,\text{wet}} \frac{1}{1 - \varphi_{H_2O}}$$

10.5 Conversion to 15% Oxygen Level

The correction of dry concentration from measured emissions to 15% oxygen can be made as follows:

$$c_{i,\text{dry},15\%O_2} = c_{i,\text{dry}} \frac{20.95 - 15}{20.95 - \%O_2}$$

10.6 Correction to ISO Conditions

Correction of NO_x emissions to ISO conditions is required by the USEPA in the NSPS for gas turbines [4]. This correction is *applicable only to NO_x emissions*. To improve the accuracy and eliminate measurement problems, the pressure term of the equation has been modified to allow the use of ambient pressure instead of combustion reference pressure. NO_x corrections other than the one shown below may be used with prior approval of the EPA Administrator.

$$c_{NO_x,15\%O_2\text{corrected}} = c_{NO_x,15\%O_2\text{obs}} \left(\frac{101.3, \text{kPa}}{P_{\text{amb}}\,\text{kPa}}\right)^{0.5} e^{19(H_{\text{obs}}-0.00633)} \left(\frac{288\,\text{K}}{T_{\text{amb}}\,\text{K}}\right)^{1.53}$$

10.7 Calculation of VOC and NMHC

The volatile organic compounds (VOC) contained in the exhaust gas are computed as follows:

(*a*) Determine the volumetric ratio of the VOC (methane plus ethane) to the total HC in the exhaust by gas chromatograph.

$$\text{VOC} \times \text{Ratio}_{GC} = \frac{c_{\text{VOC}}}{c_{\text{HC}}}$$

(*b*) Multiply this ratio by the total HC concentration obtained by FID measurement.

$$c_{\text{VOC,corrected}} = c_{\text{HC,fid}} \times \text{VOC Ratio}_{GC}$$

In the above calculations, all components are referenced to CH_4 (methane), i.e., ppm C_1. The above procedure also is to be used in calculating the NMHC component of exhaust gas.

10.8 References

[1] "Standard Atmosphere," ISO 2533, International Organization for Standardization, Geneva, Switzerland.

Copyright ASME International
Provided by IHS under license with ASME
No reproduction or networking permitted without license from IHS

Not for Resale

[2] "Method 2 — Determination of Stack Gas Velocity and Volumetric Flow Rate (Type S Pitot Tube)," 40 CFR, Part 60, Appendix A, Method 2.

[3] "Method 19 — Determination of Sulfur Dioxide Removal Efficiency and Particulate Matter, Sulfur Dioxide, and Nitrogen Dioxides Emission Rate," 40 CFR, Part 60, Appendix A, Method 19.

[4] "Method 20 — Determination of Nitrogen Oxides, Sulfur Dioxide and Diluent Emissions From Stationary Gas Turbines," US Federal Register, Title 40, Part 60, Appendix A, Method 20.

[5] Shigehara, R. T., Neulict, R. M., and Smith, W. S., "Method for Calculating Power Plant Emission Rate," *Stack Sampling News,* July 1973.

[6] "International Standards and Recommended Practices, Environmental Protection," Annex 16, Volume II, Aircraft Engine Emissions, International Civil Aviation Organization, Montreal, Canada.

[7] "Standards of Performance for New Stationary Sources, Subpart GG — Gas Turbines," US Federal Register, Title 40, Part 60.

Copyright ASME International
Provided by IHS under license with ASME
No reproduction or networking permitted without license from IHS Not for Resale

APPENDIX A
EMISSIONS FROM GAS TURBINES

(This Appendix is not an integral part of ASME B133.9-1994 and is included for information purposes only.)

A1 Products of Combustion

The combustion of liquid and gaseous hydrocarbon fuels in a gas turbine results in the formation of carbon dioxide and water vapor. For industrial turbines, this combustion process is over 99.99% efficient. Only about one-third of the oxygen contained in the air entering the engine is used during combustion. The other components of the air, nitrogen, argon, and carbon dioxide pass through the engine nearly unreacted. The products of combustion are measured in percent volume. A typical exhaust gas analysis for a gas turbine engine operating on natural gas at ISO standard day conditions, without water injection, is given in Table A1. These products are not considered to be air pollutants and will vary in concentration with load, fuel, ambient conditions, and engine design.

In this Standard it is recommended that the concentration of CO_2, H_2O, O_2, and inert gases be measured and/or computed. It is particularly important that these measurements be made accurately because emission mass rates will use these values. The water vapor concentration in the exhaust is the sum of (1) the water formed by combustion, (2) that present in the ambient air, (3) that present in the fuel (if any), and (4) that added to the cycle by injection of water or steam for performance improvement and/or emission control.

In addition to the major products of combustion, a number of minor products are produced because of fuel impurities, inlet air pollutants, incomplete combustion, or high local temperatures in the flame zone. These minor products are measured in parts per million (ppm) and parts per billion (ppb) of exhaust gas volume. Their formation, measurement, and control are discussed below.

TABLE A1 TYPICAL EXHAUST GAS ANALYSIS

Component	Volume percent	Volume percent dry
CO_2	3.1	3.3
H_2O	7.1	0.0
O_2	13.9	15.0
N_2	75.0	80.7
Ar	0.9	1.0
Total	100.0	100.0

A2 Nitrogen Oxides

(*a*) **NO_x**. Nitrogen oxides are formed by the complex chemical reactions of nitrogen and oxygen at high temperatures in the primary and intermediate zones of a gas turbine combustor. Both nitric oxide (NO), the major component, and nitrogen dioxide (NO_2) are produced. The sum of these two components is defined as NO_x. In general, uncontrolled NO_x emissions from gas turbines vary from 60 to 400 ppm depending on the engine design and fuel used.

(*b*) **NO**. Thermal NO is the major component of nitric oxide produced in a gas turbine. It is formed at flame zone temperatures of approximately 1760°C (3200°F) and above. Its formation rate is controlled largely by flame temperature but is also a function of residence time and concentration of O_2 and N_2 in the reaction zone of the combustion system. Prompt NO, the lesser nitric oxide component, is formed in the combustor in or near the stoichiometric flame front of the reacting hydrocarbons.

Nitrogen that is chemically bound in fuels such as coal and residual oil is released during combustion and reacts to form nitric oxide. Natural gas and high quality distillate fuels, the fuels on which this Standard is based, normally contain no significant concentrations of nitrogen compounds that form NO. Distillate oil may contain small amounts of fuel bound nitrogen. The USEPA allows NO_x emission credits for up to 0.25% weight of nitrogen in the fuel. The manufacturer, owner/operator, and cognizant regulatory agency should agree in advance on the allowance for fuel bound nitrogen.

Copyright ASME International
Provided by IHS under license with ASME
No reproduction or networking permitted without license from IHS
Not for Resale

(*c*) **NO_2**. Nitrogen dioxide is formed from the further oxidation of NO. This reaction can occur in the atmosphere over a period of hours or days. In a gas turbine, the lower combustion temperatures associated with low power operation and with combustion liner air cooling films also produce NO_2.

(*d*) **N_2O**. Nitrous oxide was recently considered a potentially important pollutant generated by the combustion of hydrocarbon fuels. This determination has since been found to be less significant. It has been proven that the majority of nitrous oxide was created as an artifact of measurement [1] and that the concentrations produced are insignificant (much less than one ppm). The formation and occurrence of N_2O in gas turbine exhaust is not a consideration in this Standard.

A3 Carbon Monoxide

Carbon monoxide is formed when the incomplete combustion of fuel occurs. It may be caused by incomplete mixing of fuel and air and by cold zones where combustion is prematurely quenched, such as in the cooling air near the surface of the combustion liner. CO emissions from uncontrolled engines normally range from less than 10 to 1000 ppm, depending on the engine design and load.

A4 Hydrocarbons

Unburned and partially burned hydrocarbons (HC) occur in the exhaust of a gas turbine as a result of incomplete combustion of the fuel in the combustor. Normal engine emissions of HC range from less than 1 to 10 ppm, measured as methane. Part load operation, diluent injection and unusual conditions such as high HC levels in the ambient air, heavy liquids entrained in the fuel gas, and engine lubricating oil leaking into the gas path can cause the emission of hydrocarbons to increase. These other sources of hydrocarbons in the exhaust stream are usually present but in trace amounts normally too small to be measured or considered for control purposes.

In most cases, the measurement of HC emissions is divided into total HC and volatile organic compounds (VOC), which must be distinguished from total hydrocarbons. VOC are defined as all hydrocarbons measured or emitted from a source minus methane and ethane components. In some instances, the terms nonmethane hydrocarbons (NMHC) and VOC are used interchangeably. NMHC are total HC minus only the methane component.

A5 Sulfur Dioxide

Sulfur compounds normally enter a gas turbine engine as a component of the fuel, although the induction of airborne sulfur compounds into the engine inlet has occasionally been observed. These compounds are oxidized in the engine to sulfur dioxide (SO_2) gas.

This Standard recommends that SO_2 emissions in the exhaust be determined by measuring the sulfur content of the fuel [2] and computing the SO_2 component in the exhaust, assuming complete conversion to SO_2.

The very low sulfur content of natural gas, normally a few parts per million, consists of trace amounts of hydrogen sulfide and of mercaptans introduced as an odorant for safety detection. When natural gas is burned in a gas turbine, it is diluted with air by a factor of approximately 50 (air/fuel ratio). The resultant SO_2 concentration in the exhaust is usually less than 0.1 ppm.

The total sulfur in liquid fuels is controlled by the refining process and limited by local and federal regulation. The federal NSPS for gas turbines [2] allows a maximum of 0.8% of sulfur by weight, which converts to approximately 150 ppm as SO_2. Other regulations require lower sulfur fuel content: 0.3% weight in Massachusetts; 0.05% weight in some sections of California. The allowable content of sulfur in fuels is being legislated downward.

Some control agencies are concerned about the emission of sulfuric acid mist. This mist can be formed from sulfur trioxide (SO_3), which occurs when SO_2 is oxidized by catalytic action as it passes over carbon or metallic surfaces of heat recovery boilers, process heaters, and exhaust systems. The SO_3 in turn can combine with water vapor to form sulfuric acid (H_2SO_4) which can be emitted at exhaust temperatures of 300°C (572°F) or lower. Assuming total conversion of fuel sulfur to H_2SO_4 provides an approximation of the maximum sulfuric acid emissions.

A6 Ammonia

Ammonia (NH_3) and compounds releasing NH_3 are used in the control of nitric oxide emissions in after treatment systems such as selected catalytic reduction (SCR). Operation of these systems results in ammonia emissions, termed ammonia "slip," due to incomplete mixing and high injection rates. Slip rates as low as 10 ppm are often specified by regulation. Ammonia reacts with sulfur oxides in the exhaust to form ammonium sulfates.

Copyright ASME International
Provided by IHS under license with ASME
No reproduction or networking permitted without license from IHS
Not for Resale

A7 Smoke

Gas turbine exhaust smoke is formed by the incomplete combustion of liquid fuels in the primary zone of the combustion system. The smoke consists of finely divided particles of carbon that are submicronic in size and follow the flow of the exhaust gases. When operated on natural gas fuel, stationary gas turbines produce no measurable smoke or visible exhaust plume. When operated on liquid distillate fuels, the plume produced is often invisible or just above the visible limit. Smoke visibility depends on the design and size of the engine, its installation, (i.e., stack design) and the fuel being used.

Smoke is evaluated in two ways. In the United States, the exhaust plume from the installation is evaluated by a series of visual observations to determine if it meets Visual Opacity Limits [3]. In the European Community and other locations, smoke is measured using the Bacharach method [4]. This method requires passing a controlled volume of the exhaust through a filter paper and determining the reflectivity of the stain, which is graded relative to a scale of 1 through 10 smoke spot numbers of varying density. Neither the visual opacity method nor the Bacharach method has the capability to make accurate measurements of smoke at the low levels typical of industrial gas turbine engines.

A8 Particulates

Particulates (PM) are the solid and liquid (condensable) particles emitted by the engine. They consist of solid carbon particles (smoke) and condensable hydrocarbons and sulfates. Formation of each of these products in the engine is fuel dependent. Particulates also are generated from dust in the inlet air and from dirt and rust in the inlet and exhaust piping and boilers, some of which may be left from construction.

Gas turbines that are run on natural gas fuel produce virtually no particulates. The measurement of PM from turbines run on natural gas is not recommended. The measurement of PM from engines run on liquid fuels is defined by USEPA Method 5. For gas turbine engines run on light distillate fuels, Method 5 has been modified to reduce measurement complexity and improve accuracy. (See Section 8, "Particulate Measurement.")

A9 Air Toxics

As a result of the 1990 Clean Air Act Amendments, numerous compounds have been listed as air toxics [5]. This list has been reproduced in Appendix F. The emission of these compounds is regulated at the levels of 10 tons per year, or 25 tons in combination. At these regulated levels, the emission of quantities of air toxic compounds from gas turbine engines operating on natural gas and high quality distillate fuels is unlikely. This is due to the cleanliness of the fuels and the design and installation characteristics of industrial turbine engines. Some air toxic compounds cannot be generated by gas turbines. More specific reasons are given below.

(*a*) High fuel quality is required to extend engine endurance life and maintain performance. The level of contaminants in the fuel must be closely controlled in order to prevent erosion and corrosion of the engine gas path. ASTM specifications require that trace metal concentrations of vanadium, sodium and potassium (in combination), calcium, and lead be held to 0.5 ppm by weight [6].

(*b*) High combustion efficiency and large dilution ratios are design characteristics of stationary gas turbine engines. Typical combustion efficiencies are 99.99% and air-to-fuel ratios are approximately 50. In combination, these characteristics along with careful design control of combustors have resulted in total HC emission levels in the exhaust gas of 1 to 10 ppm, measured as methane. As a result, only minute fractions (ppb or less) of unburned fuel components will be present in the exhaust.

(*c*) Good fuel filtration is required in order to prevent finely divided solids containing earth compounds and metals from entering the fuel system and fouling and eroding control orifices and fuel injectors. These compounds are prevented from being injected into the gas path and exhausted.

(*d*) High quality inlet air filtration is used to prevent airborne particles from entering the engine and causing deterioration of engine performance and life. These particles also are prevented from subsequently being oxidized and reinjected into the atmosphere.

(*e*) Close specification control of other fluids such as water, steam, and lubricating oil used in gas turbines is maintained. These fluids have specifications that stipulate allowable levels of contaminants to prevent deposition, corrosion, and erosion in the engine. Particularly rigid control is required to minimize the induction of halogen compounds to prevent them from entering the gas path. This class of compounds is particularly corrosive and greatly reduces engine life.

A9.1 Determination of Air Toxic Compounds. Air toxic compounds emitted by the engine must come from the fluids introduced into the engine dur-

Copyright ASME International
Provided by IHS under license with ASME
No reproduction or networking permitted without license from IHS
Not for Resale

ing its operation. These are fuel, air, lubricating oil, water, steam, and engine washing compounds. Each installation should be considered as specific. If determinations of the presence and quantity of emissions of air toxic compounds must be obtained, it is recommended that an analysis of each of the fluids used be made to determine the presence and expected concentrations of compounds that can form air toxic compounds. Because of the complete combustion and high dilution ratio in gas turbines, these compounds, if present at all, are expected to occur in the exhaust at extremely low concentration levels (ppb or less).

Direct measurement of these compounds in the exhaust is not recommended due to the low concentration levels. If exhaust measurement is mandated, the prior identification of each air toxic compound, its source, and probability of occurrence is recommended. Exhaust concentration levels without mass balance based on measured inlet quantities should not be accepted. The engine manufacturer should be consulted before making these determinations.

A10 Aldehydes

The production of aldehydes in the exhaust of gas turbines run on natural gas and high quality distillate fuels is extremely low. Measurements made during test programs sponsored by California show total exhaust aldehyde emissions of approximately 200 ppb for natural gas and 3 to 50 ppb for distillate fuel [7, 8]. These measurements were made using the MBTH method that takes all hydrocarbon fragments producing aldehydes and reports these as formaldehyde (HCHO). Individual species would have much lower concentrations than the total of all aldehydes reported above. Because of these low concentrations, the measurement of aldehydes from gas turbine engines operating on natural gas and distillate fuels is not recommended.

A11 References

[1] Montgomery, T. A., Samuelson, G. S., and Muzio, L. J. "Continuous Infrared Analysis of N_2O in Combustion Products," *Journal of Air and Waste Management Association*, Volume 39, No. 5, May 1989.

[2] "Method 20 — Determination of Nitrogen Oxides, Sulfur Dioxide and Diluent Emissions From Stationary Gas Turbines," US Federal Register, Title 40, Part 60, Appendix A, Method 20.

[3] "Method 9 — Visual Determination of the Opacity of Emissions from Stationary Sources," 40 CFR, Part 60, Appendix A, Method 9.

[4] "Exhaust Smoke Measurement," Annex B, Gas turbines — Procurement, ISO Specification 3977:1991(E), International Organization for Standardization, Geneva, Switzerland.

[5] "National Emission Standards for Hazardous Air Pollutants," Title 1, Section 112, US Clean Air Act Amendments 1990, PL 101-549, November 15, 1990.

[6] "Standard Specification for Gas Turbine Fuel Oils," ASTM D 2880, American Society for Testing and Materials, Philadelphia, PA.

[7] "Test and Evaluation of Methanol in a Gas Turbine System," EPRI Report AP 1712, Electric Power Research Institute, Palo Alto, CA, February 1991.

[8] "Methanol Clean Coal Demonstration Project," Final Report P500-86-005, California Energy Commission, Sacramento, CA, February 1986.

Copyright ASME International
Provided by IHS under license with ASME
No reproduction or networking permitted without license from IHS
Not for Resale

APPENDIX B
STANDARD REFERENCE CONDITIONS

(This Appendix is not an integral part of ASME B133.9-1994 and is included for information purposes only.)

Various definitions of reference conditions are commonly used. The user is cautioned to determine which of these is applicable to the data at hand. All gas turbine data shall be referenced to ISO standard conditions unless otherwise noted.

B1 Gas Turbine Operation and NO_x Correction Data

Gas turbine operation and NO_x correction data shall be referenced to ISO standard conditions per ISO 2533-1975 (E). These standard conditions also are required by the USEPA in the New Source Performance Standards for Gas Turbines, 40 CFR 60, Subpart GG:

Pressure	101.3 kPa, (14.696 psia)
Temperature	288K, 15°C, (59°F)
Humidity	60% relative humidity
	0.00633 lb H_2O per lb dry air specific humidity

B2 Normal Temperature and Pressure (NTP)

Normal temperature and pressure (NTP) defined as 273.15K, 0°C, (32°F) and 101.325 kPa are commonly used for chemical calculations because of available chemical data and evaluation methods.

B3 NSPS Standard Conditions

The USEPA has defined "standard conditions" in the New Source Performance Standards for Stationary Sources (40 CFR 60, Subpart A, paragraph 60.2) as "a temperature of 293K (68°F) and a pressure of 101.3 kilopascals (29.92 in Hg)." Data and calculations, *except those for gas turbines as stated above*, required or presented by the USEPA, may be referenced to these conditions.

Copyright ASME International
Provided by IHS under license with ASME
No reproduction or networking permitted without license from IHS
Not for Resale

APPENDIX C
PHYSICAL PROPERTIES

(This Appendix is not an integral part of ASME B133.9-1994 and is included for information purposes only.)

No.	Substance	Symbol	Molar Mass M, kg/kmol	Normal Reference Density, ρ_n, kg/m^3	Relative Density, $\frac{\rho_n \text{ Gas}}{\rho_n \text{ Air}}$	Molar Specific Volume V_{mn}, m^3/kmol
1	Ideal gas					22.414
2	Air (dry)[1]		28.963[3]	1.2930	1.000	22.400
3	Hydrogen	H_2	2.0158	0.08988	0.0695	22.438
4	Helium	He	4.0026	0.17846	0.1380	22.426
5	Neon	Ne	20.1790	0.8999	0.6960	22.425
6	Nitrogen	N_2	28.0134	1.2504	0.9671	22.403
7	Nitrogen from air[2]		28.1580[3]	1.2569	0.9722	22.403
8	Oxygen	O_2	31.9988	1.4290	1.1052	22.391
9	Argon	Ar	39.9840	1.7840	1.3797	22.392
10	Krypton	Kr	83.80	3.749	2.8995	22.351
11	Carbon monoxide	CO	28.0104	1.2505	0.9671	22.400
12	Carbon dioxide	CO_2	44.0098	1.9770	1.5290	22.261
13	Nitric oxide	NO	30.0061	1.3402	1.0365	22.390
14	Nitrous oxide	N_2O	44.0128	1.9780	1.5298	22.252
15	Ammonia	NH_3	17.0304	0.7718	0.5969	22.065
16	Hydrogen cyanide[4]	HCN	27.0256	(1.275)[2]	(0.986)	(21.200)
17	Cyanogen	C_2N_2	52.0354	2.349	1.817	22.15
18	Chlorine	Cl_2	70.906	3.210	2.4826	22.069
19	Hydrogen chloride	HCl	36.4610	1.6422	1.270	22.203
20	Hydrogen sulfide	H_2S	34.076	1.5355	1.1875	22.192
21	Sulfur dioxide	SO_2	64.059	2.9310	2.267	21.856
22	Carbon disulfide[4]	CS_2	76.131	(3.47)[4]	(2.68)	(21.94)
23	Carbonyl sulfide	COS	60.07	2.72	2.104	22.06
24	Methane	CH_4	16.043	0.7175	0.549	22.360
25	Acetylene (ethyne)	C_2H_2	26.038	1.1715	0.9060	22.226
26	Ethylene (ethene)	C_2H_4	28.054	1.2611	0.9753	22.245
27	Ethane	C_2H_6	30.0690	1.3550	1.048	22.191
28	Propylene (propene)	C_3H_6	42.080	1.9129	1.4795	21.998

Copyright ASME International
Provided by IHS under license with ASME
No reproduction or networking permitted without license from IHS
Not for Resale

APPENDIX C (Continued)

PHYSICAL PROPERTIES

No.	Substance	Symbol	Molar Mass M, kg/kmol	Normal Reference Density, ρ_n, kg/m^3	Relative Density, $\frac{\rho_n \text{ Gas}}{\rho_n \text{ Air}}$	Molar Specific Volume V_{mn}, m^3/kmol
29	Propane	C_3H_8	44.096	2.011	1.555	21.928
30	1,3-butadiene	C_4H_6	54.091	2.497	1.931	21.490
31	1-butene	C_4H_8	56.107	2.599	2.010	21.588
32	transbutene, 2 cisbutene, 2	C_4H_8	56.107	2.609 (2.611)	2.018 (2.020)	21.508 (21.49)
33	Isobutene (2-methylpropene)	C_4H_8	56.107	2.599	2.010	21.585
34	Butane (n-butane)	C_4H_{10}	58.123	2.706	2.094	21.481
35	Isobutane (2-methylpropane)	C_4H_{10}	58.123	2.697	2.080	21.550
36	n-pentane[4]	C_5H_{12}	72.150	(3.452)	(2.670)	(20.90)
37	2-methylbutane[4] (isopentane)	C_5H_{12}	72.150	(3.426)	(2.650)	(21.06)
38	2,2-dimethylpropane (neopentane)[4]	C_5H_{12}	72.150	(3.415)	(2.641)	(21.13)
39	n-hexane[4]	C_6H_{14}	86.177	(4.29)	(3.315)	(21.10)
40	n-heptane[4]	C_7H_{16}	100.203	(5.48)	(4.235)	(18.3)
41	n-octane[4]	C_8H_{18}	114.230	(6.72)	(5.20)	(17.0)
42	Benzene[4]	C_6H_6	78.113	(3.74)	(2.89)	(20.9)
43	Toluene[4]	C_7H_8	92.140	(4.88)	(3.77)	(18.9)
44	Xylene (o)[4]	C_8H_{10}	106.167	(6.85)	(5.30)	(15.5)
45	Water steam[4]	H_2O	18.0152	(0.854)	(0.660)	(21.1)
46	Nitrogen dioxide	NO_2	46.0055[1]	2.110	1.632	21.802

NOTES:

(1) Air (dry), of usual composition; volume portion in %: 78.084 N_2, 20.9476 O_2, 0.934 A; 0.0314 CO_2; balance 0.003.

(2) Air nitrogen content: air of usual composition as indicated in Note (1) minus portion of O_2.

(3) Calculated from the pure components of mixture.

(4) The values ρ_n, relative density and V_{mn} for all gases already condensed at 273.15K (T_n = 0°C) and 1.01325 bar, are put in brackets. In cases where sufficient data were available, the hypothetical normal reference densities were calculated from the specific volume of the gases at p = 1.01325 bar and for a number of temperatures above the respective saturation temperature (i.e., by temperature reduction at normal reference pressure according to the ideal gas rule to t_n = 0°C) and finally the resulting values were extrapolated according to different appropriate methods to 0°C.

Copyright ASME International
Provided by IHS under license with ASME
No reproduction or networking permitted without license from IHS
Not for Resale

APPENDIX D
AIR LAWS AND REGULATIONS

(This Appendix is not an integral part of ASME B133.9-1994 and is included for information purposes only.)

Air pollution laws and regulations, which vary throughout the world, are based on international treaties, national, state and local legislation, and rulemaking. Listed below are some of the continually changing laws and regulations affecting gas turbine installations. This list is presented only for general information, it is not complete and will not be kept current. It is recommended that the cognizant regulatory agencies and other knowledgeable persons be contacted to determine which regulations are applicable to a specific installation over a given time frame.

D1 United States

(*a*) On November 15, 1990, the Clean Air Act and Amendments of 1990 (Public Law 101-549) were signed. From this legislation the USEPA is required to issue regulations covering:

(1) Emissions of SO_2 and NO_x from large power plants (Title IV — Acid Rain).

(2) Emissions of NO_x and VOC to control ozone (Title I — Nonattainment).

(3) Emissions of 189 specific pollutants (Title III — Air Toxics; see Appendix F).

The 50 states are required to incorporate these regulations in their implementation plans over the next several years.

(*b*) The present air laws require Best Available Control Technology (BACT) emission controls for sources over 100 tons per year of NO_x in areas of attainment. In areas of nonattainment of ambient air quality standards, even more stringent controls at the Lowest Achievable Emission Rate (LAER) are enforced to control emissions of the pollutants exceeding the standards.

(*c*) In 1979, the USEPA issued New Source Performance Standards applicable to gas turbines (Federal Register Title 40, Part 60, Subpart GG) controlling NO_x and SO_2. These NSPS now are being revised with a target publication date of early 1995.

(*d*) Numerous state and local regulations have been issued to control emissions from gas turbines. Those of Los Angeles County, other parts of California, and New Jersey are very stringent and may require catalytic after treatment to control NO_x, CO, and HC. Visible smoke level is also regulated locally at various levels from zero to 20% opacity.

D2 European Community

The EC, or the European Economic Community (EEC), is a confederation of 12 independent countries that have agreed to integrate certain policies and responsibilities. The Community is composed of Belgium, Denmark, France, Greece, Ireland, Italy, Luxembourg, the Netherlands, Portugal, Spain, the United Kingdom, and Germany.

The EC currently has no "Regulations" (which are binding) or "Directives" (which achieve a binding result with flexible implementation) specifically for gas turbine engines. However, new Directives to cover these sources are being studied and the emission measurement and control of CO, NO_x, particulates, smoke, and SO_2 are being considered. Currently only five EC countries have regulations controlling emissions from stationary gas turbines: Germany, the Netherlands, Italy, Denmark, and the United Kingdom (draft rules).

D3 Germany

The basic law for air pollution in the unified Federal Republic of Germany is the "Federal Imission Control Act" (FICA), implemented in April 1974 and last amended in 1990. The most important administrative regulation implementing FICA is the "Technical Instruction on Air Pollution Control" (TA Luft). In addition to Federal Regulations, a hierarchy of complementary states' regulations also are used to control air emissions.

Copyright ASME International
Provided by IHS under license with ASME
No reproduction or networking permitted without license from IHS
Not for Resale

Turbine emission controls listed in TA Luft require control of CO, NO_x, particulates, and sulfur oxides.

D4 Japan

The "Air Pollution Control Law" of 1968 is the foundation of Japanese air pollution control. Subsequent modifications and regulations have continually reduced the allowable limit for oxides of nitrogen, oxides of sulfur, and particulates. Different standards are allowed in the various Prefectures depending on the severity of pollution. Japanese emission control regulations are nearly as severe as those of Southern California and require stringent sulfur and NO_x abatement.

D5 References

[1] "Clean Air Around the World," Second Edition, International Union of Air Pollution Prevention Associations, Brighton, United Kingdom, 1991.

[2] "The Limitation of Pollution Emissions Into the Air From Gas Turbines," Centre Interprofessionnel Technique D'etudes de la Pollution Atmospherique, Paris, France, November 1991.

[3] International Environment Reporter, Bureau of National Affairs Inc., Washington D.C., 1992.

[4] Environment Reporter (United States Laws and Regulations), Bureau of National Affairs Inc., Washington D.C., 1992.

Copyright ASME International
Provided by IHS under license with ASME
No reproduction or networking permitted without license from IHS
Not for Resale

APPENDIX E
EMISSION CONTROL METHODS

(This Appendix is not an integral part of ASME B133.9-1994 and is included for information purposes only.)

E1 General

The control of emissions from gas turbines has advanced rapidly over the past two decades. Major control methods, which have become commercial, are reviewed below. Methods presently in research and development such as catalytic combustion and rich quench lean combustion are not discussed.

E2 Control of Unburned Products of Combustion

The combustion systems installed in modern industrial gas turbines have been designed to control the emission of unburned products of combustion (CO, HC, smoke, and particulates) to very low levels. Additional reduction is not usually necessary except in conjunction with high levels of NO_x control, discussed below.

(*a*) *Liquid Fuel Operation*. Engines operating on liquid fuels normally produce more smoke and particulates than those operating on natural gas and often are responsive to fuel changes. Various methods of reducing the emissions of unburned products involve improving fuel burning and injection performance such as:

(*1*) improving fuel burnability by reducing aromatic constituents;

(*2*) reducing fuel viscosity by fuel changes or fuel heating;

(*3*) changing fuel injector designs to improve atomization and spray pattern.

(*b*) *Catalytic After Treatment*. The reduction of CO, HC, and carbon particulates can be accomplished by the installation of an oxidizing catalyst in the exhaust system. The catalyst design and configuration is dictated by the component and the amount of reduction required. In many instances, a 90% reduction of carbon monoxide or some of the heavier hydrocarbon species is feasible. The catalyst system will add one or more inches of water back pressure to the exhaust system and cause a slight reduction in engine performance.

E3 Control of Oxides of Nitrogen

Oxides of nitrogen emissions from gas turbines are controlled by diluent injection, lean combustion, or catalytic after treatment. A variety of approaches is used successfully by various engine manufacturers and catalyst suppliers. The general principles of operation are discussed below.

(*a*) *Water and Steam Injection*. The injection of a diluent is the most common NO_x control method. Water or steam injected into the combustor reaction zone reduces zone temperature, which inhibits the formation of NO. Reductions of total NO_x emissions of over 80% can be achieved. The various engine manufacturers use different methods to inject water or steam into the combustor. In some instances, water is finely dispersed in the fuel and injected through the fuel nozzles.

The choice of the use of water or steam depends on system design and the economics of installation and operation. Water is sometimes chosen over steam because it has higher effectiveness particularly at lower NO_x control rates. Steam injection requires a heat source, usually the waste heat boiler, which is not available with simple cycle machines. Some considerations in the use of water or steam injection for NO_x control are as follows.

(*1*) The injection of a diluent changes the thermodynamic cycle of the engine and affects the performance relative to the amount used. When water or steam is injected, engine mass flow and output power are increased. Engine heat rate (heat consumption per net unit of power out) is increased with water injection and decreased with steam injection. Combined cycle heat rate degrades with both water and steam injection.

(*2*) Diluent injection can cause an increase in

Copyright ASME International
Provided by IHS under license with ASME
No reproduction or networking permitted without license from IHS
Not for Resale

CO and HC emissions depending on the injection rates, the engine design, and the method of injection. This problem may be solved using an oxidizing catalyst exhaust after treatment.

(3) Diluent rates and NO_x reduction are usually expressed in terms of water (steam)-to-fuel mass ratio. Water-to-fuel ratio values vary depending on the installation; however, values between 0.5 and 1.2 are common. A water-to-fuel ratio of 1.0 will reduce NO_x by 70 to 80% from the uncontrolled level. Steam injection rates are often higher.

(4) High diluent injection rates can reduce engine life, require more frequent inspections, and increase operating costs. Both the steam and the water used for injection must be free of contaminants, which can cause deposition in or corrosion of the hot section of the engine reducing performance and service life. Special water and steam purity standards have been established based on each manufacturer's experience.

(5) Emissions computations based on wet exhaust must take into account the water vapor resulting from diluent injection, combustion, and ambient humidity.

(b) *Lean Combustion.* Lean combustion systems operate on natural gas fuel, which is premixed with air and burned near the lean combustion limit. The premixing provides uniform, lean fuel/air mixtures that burn at reduced combustion zone temperatures. Both the uniformity of the burning mixture and the lean combustion reduce the formation of NO. Combustion system flammability limits are narrow. Engine operation under these narrow combustion limits requires close control of the combustion system and engine operating parameters in order to accelerate the engine, run with stability over the load range, and limit the formation of both NO_x and CO. To accomplish lean burn operation, various designs of variable geometry combustors, staged combustion, fuel staging, or the sequential staging of a number of small individual burners are used. More complex combustion, fuel, and engine control systems are required for engines using lean combustion NO_x control. NO_x levels of 15 to 50 ppmv at 15% O_2 have been cited by engine manufacturers.

(c) *Selective Catalytic Reduction (SCR).* SCR exhaust treatment is one of the most effective technologies for controlling NO_x from stationary gas turbines. The process consists of injecting ammonia into the exhaust gases upstream of a catalytic reactor. The NH_3 reacts with the NO_x to form N_2 and water vapor. SCR systems are capable of 80–90% reduction and usually are used in conjunction with water or steam injection to achieve the 5–10 ppm NO_x (15% dry) emission levels required by the California South Coast Air Quality Management District.

Depending on the catalyst chosen, this control method is not always practical for use on many simple cycle engines because the catalyst bed must be operated at temperatures that are from 100 to several hundred degrees (F) lower than average normal exhaust gas temperatures. Application to combined cycle and cogeneration plants is common where the bed can be located in a special section of a waste heat boiler that allows control of the temperature (550–750°F for vanadium pentoxide catalysts). Both base metal and noble metal catalysts are used.

SCR NO_x control adds an additional operating system to a gas turbine installation. This SCR system consists of the catalyst bed; the ammonia storage, supply, and injection system; and the monitoring and control system. In order to achieve the reduction required, most systems over inject ammonia causing NH_3 slip in the exhaust.

SCR works well in applications limited to base load and natural gas fuel. Problems occur with operation on distillate fuels due to the creation of ammonium salts, which cause fouling of the boiler and catalyst bed. Other disadvantages of SCR include:

(1) high initial cost and increased operating expense;

(2) limited operating range and load flexibility;

(3) reduction in performance due to exhaust pressure drop;

(4) disposal of toxic spent catalyst;

(5) potential for ammonia spills and ammonia emissions.

E4 References

[1] Bahr, D. W., and Lyon, T. F, "NO_x Abatement via Water Injection In Aircraft — Derivative Turbine Engines," American Society of Mechanical Engineers Paper 84-GT-103, June 1984.

[2] Hung, W. S. Y., and Agan, D. D., "The Control of NO_x and CO Emissions from 7-MW Gas Turbines with Water Injection as Influenced by Ambient Conditions," American Society of Mechanical Engineers Paper 85-GT-50, March 1985.

[3] Vaught, J. M., and Bach, C. S., "NO_x Reduction Experience in Model 501-KB and KB5 Gas Turbines," Air Pollution Control Association Paper No. 87-6.3, June 1987.

[4] Swingle, R. L., and Phaneuf, D. J., "Meeting

Copyright ASME International
Provided by IHS under license with ASME
No reproduction or networking permitted without license from IHS
Not for Resale

Worldwide NO_x Regulations for Industrial Gas Turbines Under 20 MW," Air and Waste Management Association Paper No. 92-136.02, June 1992.

[5] Antos, R. J., "Emission Control Techniques for Westinghouse Industrial Combustion Turbines," Air and Waste Management Association Paper No. 92-136.07, June 1992.

[6] Schorr, M. M., "NO_x Emission Control for Gas Turbines: A 1992 Update on Regulations and Technology," IGTI-Vol. 7, page 1, ASME Cogen-Turbo Conference, American Society of Mechanical Engineers, September 1992.

[7] Viereck, D. et al, "GT13E2, The Cleanest Gas Turbine for Combined Cycle and Cogeneration Application," IGTI-Vol. 7, page 231, ASME Cogen-Turbo Conference, American Society of Mechanical Engineers, September 1992.

[8] Davis, L. B., "Dry Low NO_x Combustion System for GE Heavy-Duty Gas Turbines," IGTI-Vol. 7, page 255, ASME Cogen-Turbo Conference, American Society of Mechanical Engineers, September 1992.

[9] Rosenberg, H. S., Oxley, J. H., and Barrett, R. E., "Selective Catalytic Reduction for NO_x Control at Cogeneration Plants," IGTI-Vol. 7, page 409, ASME Cogen-Turbo Conference, American Society of Mechanical Engineers, September 1992.

Copyright ASME International
Provided by IHS under license with ASME
No reproduction or networking permitted without license from IHS
Not for Resale

APPENDIX F
LISTED AIR TOXICS

(This Appendix is not an integral part of ASME B133.9-1994 and is included for information purposes only.)

This list of air toxic compounds is taken from the United States Clean Air Act Amendments of 1990, US Public Law 101-549, Section 112, "National Emission Standards for Hazardous Air Pollutants." The list is presented for general guidance. It will *not* be kept current, nor will it reflect the toxic regulations published by state agencies which may be more extensive or contain different compounds. Each specific chemical compound is listed with its Chemical Abstract Service Number (CAS #).

CAS#	Chemical Name	CAS#	Chemical Name
75070	Acetaldehyde	510156	Chlorobenzilate
60355	Acetamide	67663	Chloroform
75058	Acetonitrile	107302	Chloromethyl methyl ether
98862	Acetophenone	126998	Chloroprene
53963	2-Acetylaminofluorene	1319773	Cresols/cresylic acid
107028	Acrolein	95487	o-Cresol
79061	Acrylamide	108394	m-Cresol
79107	Acrylic Acid	106445	p-Cresol
107131	Acrylonitrile	98828	Cumene
107051	Allyl chloride	94757	2,4-D, salts and esters
92671	4-Aminodiphenyl	3547044	DDE
62533	Anilene	334883	Diazomethane
90040	o-Anisidine	132649	Dibenzofurans
1332214	Asbestos	96128	1,2-Dibromo-3 xhloeopeopan
71432	Benzene (including gasoline)	84742	Dibutylphtalate
92875	Benzidine	106467	1,4-Dichlorobenzene(p)
98077	Benzotrichloride	91941	3,3-Dichlorobenzidine
100447	Benzyl chloride	111444	Dichloroethyl ether
92524	Biphenyl	542756	1,3-Dichloropropene
117817	Bis(2-ethylhexyl)phthalate (DEHP)	62737	Dichlorvos
542881	Bis(chloromethyl) ether	111422	Diethanolamine
75252	Bromoform	121697	N,N-Diethyl aniline (N,N-Dimethylaniline)
106990	1,3-Butadiene		
156627	Calcium cyanamide	64675	Diethyl sulfate
105602	Caprolactam	119937	3-3-Dimethyl benzidine
133062	Captan	79447	Dimethyl carbarmoyl chloride
63252	Carbaryl	68122	Dimethyl formamide
75150	Carbon disulfide	57147	1,1-Dimethyl hydrazine
56235	Carbon tetrachloride	131113	Dimethyl phthalate
463581	Carbonyl sulfide	77781	Dimethyl sulfate
120809	Catechol	534521	4,6-Dinitro-o-cresol & salts
133904	Chloramben	51285	2,4-Dinitrophenol
57749	Chlordane	121142	2,4-Dinitrotoluene
7782505	Chlorine	60117	Dimethyl Aminoazobenzene
79118	Chloroacetic acid	123911	1,4-Dioxane
532274	2-Chloroacetophenone	119904	3,3-Dimethoxybenzedine
108907	Chlorobenzene	122667	1,2-Diphenlhydrazine

Copyright ASME International
Provided by IHS under license with ASME
No reproduction or networking permitted without license from IHS
Not for Resale

CAS#	Chemical Name
106898	Epichlorohydrin
106887	1,2-Epoxybutane
140885	Ethyl acrylate
100414	Ethyl benzene
51796	Ethyl carbamate (Urethane)
75003	Ethyl chloride (Chloroethane)
75218	Ethylene oxide
107062	Ethylene dichloride (1,2-Dichloroethane)
107211	Ethylene glycol
151564	Ethyline imine (Aziridine)
106934	Ethylene dibromide (Dibromoethane)
96457	Ethylene thiourea
75343	Ethylidene chloride (1,1-Dichloroethane)
50000	Formaldehyde
76448	Heptachlor
118741	Hexachlorobenzene
87683	Hexachlorobutadiene
77474	Hexachlorocyclopentadiene
110543	Hexane
67721	Hexachloroethane
822060	Hexamethylene-1,6 diisocyanate
680319	Hexamethyl-phosphoramide
302012	Hydrazine
7647010	Hydrochloric acid
7664393	Hydrogen fluoride (Hydrofluoric acid)
123319	Hydroquinone
78591	Isophorone
58899	Lindane (all isomers)
108316	Maleic anhydride
67561	Methanol
72435	Methoxychlor
74839	Methyl bromide (Bromomethane)
74873	Methyl chloride (Chloromethane)
71556	Methyl chloroform (1,1,1-Trichloroethane)
78933	Methyl ethyl ketone (2-Butanone)
60344	Methyl hydrazine
74884	Methyl iodide (iodomethane)
108101	Methyl isobutyl ketone (Hexone)
624839	Methyl isocyanate
80626	Methyl methacrylate
1634044	Methyl fert butyl ether
101144	4,4-Methylene bis (2-chloraniline)
75092	Methylene chloride (Dichloromethane)
101688	Methylene diphenyl diisocyanate (MDI)
101779	4,4'-Methylenedianline
91203	Naphthalene
98953	Nitrobenzene
92933	4-Nitrobiphenyl
100027	4-Nitrophenol
79469	2-Nitropropane
684935	N-Nitroso-N-methylurea
62759	N-Nitrosodimethylamine
59892	N-Nitrosomorpholine
56382	Parathion
82688	Pentachloronitrobenzene (Quintobenzene)
87865	Pentachlorophenol
108952	Phenol
106503	p-Phenyhlenediamine
75445	Phosgene
7803512	Phosphine
7723140	Phosphorus
85449	Phthalic anhydride
1336363	Polychlorinated biphenyls (Aroclors)
1120714	1,3-Propane sultone
57578	beta-Propiolactone
123386	Propionaldehyde
114261	Propoxur (Baygon)
78875	Propylene dichloride (1,2-Dichloropropane)
75569	Propylene oxide
75558	1,2-Propylenimine
91225	Quinoline
106514	Quinone
100425	Styrene
96093	Styrene oxide
1746016	2,3,7,8-Tetrachlorodibenzo-p-dioxin
79345	1,1,2,2-Tetrachloroethane
127184	Tetrachloroethylene
7550450	Titanium tetrachloride
108883	Toluene
95807	2,4-Toluene diamine
584849	2,4-Toluene diisocyanate
95534	o-Toluidine
8001352	Toxaphene (chlorinated camphene)
120821	1,2,4-Trichlorobenzene
79005	1,1,2-Trichloroethane
79016	Trichloroethylene
95954	2,4,5-Trichlorophenol
88062	2,4,6-Trichlorophenol
121448	Triethylamine
1582098	Trifluralin
540841	2,2,4-Trimethylpentane
108054	Vinyl acetate
593602	Vinyl bromide
75014	Vinyl chloride
75354	Vinylidene chloride (1,1-Dichloroethylene)
1330207	Xylenes (isomers and mixture)
95476	o-Xylenes
108383	m-Xylenes
106423	p-Xylenes
	*Antimony Compounds
	*Arsenic Compounds
	*Beryllium Compounds
	*Cadmium Compounds
	*Chromium Compounds
	*Cobalt Compounds
	*Coke Oven Emissions
	*Cyanide Compounds
	*Glycol ethers
	*Lead Compounds
	*Manganese Compounds
	*Mercury Compounds
	*Fine mineral fibers
	*Nickel Compounds
	*Polycylic Organic Matter
	*Radionuclides (including radon)
	*Selenium Compounds

Copyright ASME International
Provided by IHS under license with ASME
No reproduction or networking permitted without license from IHS
Not for Resale

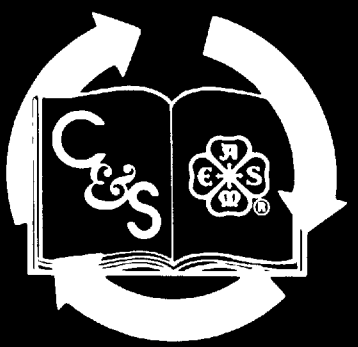

This document is printed
on 50% recycled paper.

ISBN #0-7918-2246-X

K09994

Copyright ASME International
Provided by IHS under license with ASME
No reproduction or networking permitted without license from IHS

Not for Resale