ASME B133.7M 85 ■ 0759670 0041576 1 ■

H-24-15

AN AMERICAN NATIONAL STANDARD

Gas Turbine Fuels

ANSI/ASME B133.7M - 1985

(REVISION OF ANSI B133.7 - 1977)

SPONSORED AND PUBLISHED BY

THE AMERICAN SOCIETY OF MECHANICAL ENGINEERS

United Engineering Center 345 East 47th Street New York, N. Y. 10017

Copyright ASME International
Provided by IHS under license with ASME
No reproduction or networking permitted without license from IHS

Not for Resale

Date of Issuance: October 31, 1985

This Standard will be revised when the Society approves the issuance of a new edition. There will be no addenda or written interpretations of the requirements of this Standard issued to this Edition.

This code or standard was developed under procedures accredited as meeting the criteria for American National Standards. The Consensus Committee that approved the code or standard was balanced to assure that individuals from competent and concerned interests have had an opportunity to participate. The proposed code or standard was made available for public review and comment which provides an opportunity for additional public input from industry, academia, regulatory agencies, and the public-at-large.

ASME does not "approve," "rate," or "endorse" any item, construction, proprietary device, or activity.

ASME does not take any position with respect to the validity of any patent rights asserted in connection with any items mentioned in this document, and does not undertake to insure anyone utilizing a standard against liability for infringement of any applicable Letters Patent, nor assume any such liability. Users of a code or standard are expressly advised that determination of the validity of any such patent rights, and the risk of infringement of such rights, is entirely their own responsibility.

Participation by federal agency representative(s) or person(s) affiliated with industry is not to be interpreted as government or industry endorsement of this code or standard.

ASME accepts responsibility for only those interpretations issued in accordance with governing ASME procedures and policies which preclude the issuance of interpretations by individual volunteers.

No part of this document may be reproduced in any form,
in an electronic retrieval system or otherwise,
without the prior written permission of the publisher.

Copyright © 1985 by
THE AMERICAN SOCIETY OF MECHANICAL ENGINEERS
All Rights Reserved
Printed in U.S.A.

Copyright ASME International
Provided by IHS under license with ASME
No reproduction or networking permitted without license from IHS

Not for Resale

FOREWORD

(This Foreword is not part of ANSI/ASME B133.7M-1985.)

The purpose of the B133 Standards is to provide guidance and criteria to facilitate preparation of gas turbine procurement specifications. These Standards will also facilitate response to such specifications.

The B133 Standards provide essential information for the procurement of gas turbine power plants. They apply to open cycle, closed cycle, and semi-closed cycle gas turbines with conventional combustion systems for industrial, marine, and electric power applications. Auxiliaries needed for proper operation are covered. Not included are gas turbines applied to earth moving machines, agricultural and industrical-type tractors, automobiles, trucks, buses, and aeropropulsion units.

For gas turbines using unconventional or special heat sources (such as chemical processes, nuclear reactors, or furnaces or supercharged boilers), these Standards may be used as a basis for procurement, but appropriate modifications may be necessary.

The intent of the B133 Standards is to cover the normal requirements of the majority of applications, recognizing that economic trade-offs and reliability implications may differ in some applications. The user may desire to add, delete, or modify the requirements in this Standard to meet his specific needs in the preparation of his own procurement specification.

The B133.7 Standard covering the requirements for fuels for gas turbines (except aircraft turbines) has been derived from the ASTM gas turbine fuel oils specification D 2880 and from the proposed ISO document on gaseous fuels for gas turbines.

Suggestions for improvement of this Standard will be welcome. They should be sent to The American Society of Mechanical Engineers, United Engineering Center, 345 East 47th Street, New York, NY 10017.

ANSI/ASME B133.7M was approved by the ASME Standards Committee B133, and final approval by the American National Standards Institute was granted on May 24, 1985.

Copyright ASME International
Provided by IHS under license with ASME
No reproduction or networking permitted without license from IHS
Not for Resale

ASME STANDARDS COMMITTEE B133
Procurement Standards for Gas Turbines

(The following is the roster of the Committee at the time of approval of this Standard.)

OFFICERS

A. A. Hafer, *Chairman* **W. R. Daisak,** *Secretary*

COMMITTEE PERSONNEL

ACOUSTICAL SOCIETY OF AMERICA
R. M. Hoover, Hoover, Keith & Bruce, Inc., Houston, Texas

AMERICAN SOCIETY OF MECHANICAL ENGINEERS, THE
A. A. Hafer, General Electric Co., Schenectady, New York
V. Maddox, *Alternate*, Aramco Services Co., Houston, Texas

BATTELLE MEMORIAL INSTITUTE
H. R. Hazard, Battelle Memorial Institute, Columbus, Ohio

EDISON ELECTRIC INSTITUTE
J. E. Barry, Missouri Public Service Co., Kansas City, Missouri

INSTITUTE OF ELECTRICAL AND ELECTRONICS ENGINEERS
A. C. Dolbec, Electric Power Research Institute, Palo Alto, California
R. D. Miller, *Alternate*, Westinghouse Electric Corp., Concordville, Pennsylvania

NATIONAL FIRE PROTECTION ASSOCIATION
F. J. Mapp, American Telephone and Telegraph Co., Basking Ridge, New Jersey

SOCIETY OF NAVAL ARCHITECTS AND MARINE ENGINEERS
D. A. Rains, Ingalls Shipbuilding Div., Litton Industries, Pascagoula, Mississippi

INDIVIDUAL MEMBERS
F. E. Bishop, Aircraft Porous Media, Inc., Glen Cove, New York
E. A. Borgmann, Cincinnati Gas and Electric Co., Cincinnati, Ohio
L. T. Brinson, Turbodyne Corp., St. Cloud, Minnesota
S. M. DeCorso, Westinghouse Electric Corp., Concordville, Pennsylvania
A. Haftel, Westinghouse Electric Corp., Concordville, Pennsylvania
W. A. Johnson, El Paso Natural Gas Co., El Paso, Texas
A. N. Smith, General Electric Co., Schenectady, New York
K. A. Teumer, Woodward Governor Co., Fort Collins, Colorado
W. Walke, Sargent and Lundy Engineers, Chicago, Illinois
A. O. White, Mechanical Technology, Inc., Latham, New York
J. P. Zanyk, Dow Chemical Corp., Freeport, Texas

PERSONNEL OF SUBCOMMITTEE 7

S. M. DeCorso, *Chairman,* Westinghouse Electric Corp., Concordville, Pennsylvania
S. D. Andrews, Florida Department of Agricultural & Consumer Services, Tallahassee, Florida

Copyright ASME International
Provided by IHS under license with ASME
No reproduction or networking permitted without license from IHS
Not for Resale

G. T. Armstrong, National Bureau of Standards, Washington, District of Columbia
R. R. Balsbough, Wisconsin Electric Power Co., Milwaukee, Wisconsin
J. E. Barry, Missouri Public Service Co., Kansas City Missouri
R. Bauer, ASTM, Philadelphia, Pennsylvania
E. G. Berry, Mobil Research & Development Co., Paulsboro, New Jersey
S. Bonifazi, Pratt & Whitney Aircraft, West Palm Beach, Florida
E. A. Borgmann, Cincinnati Gas & Electric Co., Cincinnati, Ohio
W. Bunker, Fossil Fuel Utilization, Washington, District of Columbia
J. T. Clancey, Conoco Coal Development Co., Library, Pennsylvania
J. Clark, NASA Lewis, Cleveland, Ohio
A. Cohn, Electric Power Research Institute, Palo Alto, California
W. M. Crim, U.S. Department of Energy, Washington, District of Columbia
H. Doering, General Electric Co., Schenectady, New York
A. C. Dolbec, Electric Power Research Institute, Palo Alto, California
J. W. Dunning, Jr., NASA Lewis, Cleveland, Ohio
G. E. Edgerly, Turbo Power and Marine Systems, Farmington, Connecticut
H. H. Gilman, Electric Power Research Institute, Palo Alto, California
D. Goodwin, Environmental Protection Agency, Research Triangle Park, North Carolina
M. D. Gurney, Bartlesville Energy Technology Center, Bartlesville, Oklahoma
A. A. Hafer, General Electric Co., Schenectady, New York
B. T. Hagewood, Long Island Lighting Co., Glenwood Landing, New York
R. P. Hangerbrack, U.S. Environmental Protection Agency, Research Triangle Park, North Carolina
J. W. Hickey, General Electric Co., Schenectady, New York
C. D. Hoertz, Ashland Synthetic Fuel Inc., Ashland, Kentucky
N. Holt, Electric Power Research Institute, Palo Alto, California
M. W. Horner, General Electric Co., Schenectady, New York
G. T. Ingham, International Coal Refining Co., Allentown, Pennsylvania
H. L. Jaeger, Westinghouse Electric Corp., Concordville, Pennsylvania
F. S. Kemp, United Technologies, South Windsor, Connecticut
G. H. Kitchen, Lubrication and Fuel Studies, Murray Hill, New Jersey
D. V. Kniebes, Institute of Gas Technology, Chicago, Illinois
T. R. Koblish, Curtiss Wright Corp., Woodbridge, New Jersey
B. J. Koch, Conoco Coal Development Co., Library, Pennsylvania
J. Koening, Gulf Mineral and Resources Co., Denver, Colorado
P. Kydd, Hydrocarbon Research Inc.
S. Lanier, U.S. Environmental Protection Agency, Research Triangle Park, North Carolina
J. P. LaStella, Consolidated Edison Co., Brooklyn, New York
R. T. LeCren, Solar Turbines International, San Diego, California
E. Lister, U.S. Department of Energy, Washington, District of Columbia
S. W. Lovejoy, Long Island Lighting Co., Hicksville, New York
J. Marlow, Westinghouse Electric Corp., Concordville, Pennsylvania
M. L. McKimmey, Perini Corp., Framinghton, Massachusetts
L. E. McNeese, Oak Ridge National Laboratory, Oak Ridge, Tennessee
F. N. Megahan, Philadelphia Electric Co., Philadelphia, Pennsylvania
P. R. Mulik, Westinghouse Research & Development Center, Pittsburgh, Pennsylvania
C. Nakaishi, Morgantown Energy Technology Center (METC), Morgantown, West Virginia
J. Neal, U.S. Department of Energy, Washington, District of Columbia
G. Nesbitt, Turbodyne Corp., St. Could, Michigan
R. W. Niedzwiecki, NASA Lewis Research Center, Cleveland, Ohio
J. Notardonato, NASA Lewis Research Center, Cleveland, Ohio
R. R. Patterson, Chevron Research, Richmond, California
M. Pepper, Exxon Research & Engineering Co.
R. R. Petterson, Mitre Corp., McLean, Virginia
A. Pitrolo, Morgantown Energy Research Center (MERC), Morgantown, West Virginia
G. J. Robert, Conoco Coal Development Co., Library, Pennsylvania
D. W. Robinson, Standard Oil Co. (Indiana), Chicago, Illinois
W. Rovesti, Electric Power Research Institute, Palo Alto, California
D. Ryan, Exxon Research and Engineering Co., Baytown, Texas
H. C. Simmons, Parker-Hannifin Corp., Cleveland, Ohio
F. Slab, Detroit Diesel Allison, Indianapolis, Indiana
T. Stein, Mobil Oil Corp., Princeton, New Jersey
G. C. Steymann, Con Edison Research & Development
C. Stinespring, Morgantown Energy Technology Center (METC), Morgantown, West Virginia

Copyright ASME International
Provided by IHS under license with ASME
No reproduction or networking permitted without license from IHS
Not for Resale

C. Streed, Mobil Research & Development Corp., Paulsboro, New Jersey
R. L. Thomas, Exxon Research and Engineering Co., Florham Park, New Jersey
C. G. Thompson, Southern California Edison Co., Rosemead, California
C. J. Thompson, C. J. Bartlesville Energy Technology Center (DOE), Bartlesville, Oklahoma
A. B. Turner, Westinghouse Electric Corp., Madison, Pennsylvania
J. M. Vaught, Detroit Diesel Allison, Indianapolis, Indiana
E. C. White, Naval Ship Research & Development Center, Annapolis, Maryland
R. Wolk, Electric Power Research Institute, Palo Alto, California
S. Zaczepinski, Exxon Research and Engineering Co., Baytown, Texas

Copyright ASME International
Provided by IHS under license with ASME
No reproduction or networking permitted without license from IHS
Not for Resale

CONTENTS

Foreword iii
Committee Roster v

1 Scope 1
2 Liquid Fuels for Gas Turbines 1
3 Gaseous Fuels for Gas Turbines 1
3.1 General Requirements for Gaseous Fuels 1
3.2 Specific Requirements for Gaseous Fuels 1
3.3 Gaseous Fuel Treatment 3
3.4 Test Methods for Gaseous Fuels 3

Tables
1 Fuel Gas Requirements at the Gas Turbine 2
2 Test Methods for Gaseous Fuels 3

Appendix
A Liquid Fuels 5
A1 Fuel Contaminants and Trace Metals 5
A2 Significance of Liquid Fuel Properties 5
A3 Names Commonly Employed for Commercial and Marine Fuels 5
A4 Operating Procedures for Handling and Storage of Gas Turbine Liquid Fuels 5
A5 Procedures for Handling Low Flash Point Liquid Petroleum Fuels 8

Figures
A1 Inlet Diffuser and Floating Suction 7
A2 Tank Bottom Configurations 7

Appendix
B Gaseous Fuels 12
B1 Fuel Gas Properties 12
B2 Calculation of Specific Gravity and Calorific Value of Gaseous Fuels 14
B3 Fuel Gas Units – Conversion Factors 16

Tables
B1 Typical Properties of Common Gaseous Fuels 13
B2 Typical Limits of Some Contaminants in Gaseous Fuels 15
B3 Conversion Factors 16

Copyright ASME International
Provided by IHS under license with ASME
No reproduction or networking permitted without license from IHS
Not for Resale

Appendix
C Nonfuel Contaminants (Air and Water) 17
C1 Introduction 17
C2 Recommended Limits 17

Appendix
D Smoke Formation in Gas Turbines 18
D1 Scope 18
D2 Introduction 18
D3 Gas Turbine Design 18
D4 Gas Turbine Load 18
D5 Fuel Properties 18
D6 Fuel Additives 18

Appendix
E Cross Reference of ASTM and ANSI Test Methods 19

Copyright ASME International
Provided by IHS under license with ASME
No reproduction or networking permitted without license from IHS
Not for Resale

ANSI/ASME B133.7M-1985
AN AMERICAN NATIONAL STANDARD

AN AMERICAN NATIONAL STANDARD

GAS TURBINE FUELS

1 SCOPE

Gas turbines may be designed to burn either gaseous or liquid fuels, or both, with or without changeover while under load. This Standard covers both types of fuel.

2 LIQUID FUELS FOR GAS TURBINES

The standard for liquid fuels for gas turbines shall be the ASTM D 2880 Standard Specification for Gas Turbine Fuel Oils.[1] When this referenced ASTM Standard is superseded by a revision approved by the ASTM, the same revision shall apply to this Standard.

3 GASEOUS FUELS FOR GAS TURBINES

3.1 General Requirements for Gaseous Fuels

The fuel shall be completely gaseous at the entry to the manufacturer's system and at all points downstream to the fuel nozzle where liquid or solids might be harmful to the gas turbine. Liquid and solid eliminators or other special provisions such as heaters may be necessary to ensure a completely gaseous fuel. Contaminants, if present, must be controlled to such levels as specified by the manufacturer. Specific requirements are summarized in Table 1.

3.2 Specific Requirements for Gaseous Fuels

3.2.1 Supply Pressure and Temperature. The user should notify the manufacturer of the pressure and temperature ranges expected of the fuel gas supply including amplitude, rate of change, and period of pressure and temperature fluctuations. In the event that these fluctuations are unacceptable, the equipment manufacturer should advise the user of acceptable limits.

[1]Copies of ASTM D 2880 may be obtained from the American Society for Testing and Materials, 1916 Race St., Philadelphia, Pennsylvania 19103.

3.2.2 Gas Composition. A complete quantitative analysis of the fuel gas should be obtained from the gas supplier as part of the fuel evaluation. This will include combustible components, inert components, and contaminants.

3.2.3 Calorific Value and Variation. The low (net) calorific value of each gas must be specified, or information supplied, by way of a complete quantitative analysis of the gas so that it can be calculated. The low calorific value (LCV) does not include the latent heat of condensation of water in the combustion gases. The calculation of calorific value from fuel composition is discussed in Appendix B2.

The maximum variation of the fuel gas calorific value from the average value shall be reported to the manufacturer since these variations could affect the gas control system. In the event that these variations are unacceptable, the manufacturer will inform the user of acceptable limits of calorific value variation.

Fuels with very low calorific values, below approximately 36 Btu/gal (10 000 kJ/m^3), may require blending to raise the calorific value for use in standard equipment.

3.2.4 Flammability Limits. The ratio of the two flammability limits, upper and lower, for the fuel gas should meet the minimum specifications of the manufacturer. Failure to do so could mean that the full fuel rate range of the gas turbine could not be used. In an extreme case, it may be impossible to light off a gas turbine with gas fuel outside the flammability limits.

3.2.5 Contaminants. Contaminants are those substances in fuel gas which can cause interruption or degradation of a turbine system's performance or can result in high maintenance of the system. Contaminants can cause fouling, plugging, erosion, or corrosion of the fuel system, the turbine, or the exhaust system. Some of the contaminants likely to be found are:

(*a*) *solids* – sand, clay, rust, iron oxide, iron sulfide, lampblack, coke, tar, gas hydrates

(*b*) *liquids* – condensed hydrocarbons, water, salt water, scrubber oil, lube oil

Copyright ASME International
Provided by IHS under license with ASME
No reproduction or networking permitted without license from IHS
Not for Resale

TABLE 1 FUEL GAS REQUIREMENTS AT THE GAS TURBINE

Fuel gas composition (vol %/mol %) CH_4 $n\text{-}C_4H_{10}$ H_2 C_2H_2 $i\text{-}C_4H_{10}$ CO C_2H_4 $n\text{-}C_5H_{12}$ CO_2 C_2H_6 $i\text{-}C_5H_{12}$ H_2O C_3H_6 C_6 N_2 C_3H_8 C_7^+ O_2 C_4H_8	Report vol % of each component present
Available gas supply pressure	Report
Available supply temperature	Report
Calorific value (lower)	
Range	Report
Variability	Report
Rate of variation	Report
Gas density	Report (may be calculated if complete composition given)
Flammability limits (Ratio of upper limit to lower limit)	Report (include reference to method of determination and gas pressure and temperature)
Contaminants (1)	
Unsaturated hydrocarbons	Report
Naphthalene	Report
Liquid hydrocarbons and gas hydrates	Maximum condensation temperature must below minimum system temperature by safe margin (2).
Water	(Same as above)
Solids	Report total solids and particle size distribution.
Sulfur, total	Must comply with any applicable local emission codes. Gas turbines with heat recovery equipment may require additional control to prevent cold end corrosion.
Sulfur compounds	
Hydrogen sulfide (H_2S)	Report
Mercaptans (RSH)	Report
Carbonyl sulfide (COS)	Report
Nitric oxide	Report
Ammonia	Report
Alkali metals	Report (3)

NOTES:
(1) See para. B1.5.12 for some typical contaminant level limits.
(2) Typical temperature margin is 25° to 30°C (45° to 54°F). Localized temperature drops due to pressure changes in the gas turbine fuel system should be taken into account.
(3) See para. B1.5.11.

Copyright ASME International
Provided by IHS under license with ASME
No reproduction or networking permitted without license from IHS
Not for Resale

TABLE 2 TEST METHODS FOR GASEOUS FUELS

Test for	ANSI/ASTM Designation of Test Method
Gas sampling	
Natural gas	D 1145
LPG	D 1265
Manufactured gas	D 1247
Gas measurements	D 1071
Gas composition	
Volumetric-chemical method	D 1136 (1)
Mass spectrometry	D 1137 (1)
Gas chromatography	D 1945
Calorific value	
Natural gas calorimetry	D 1826
Calculation method	D 3588
Specific gravity	
Methods of measurement	D 1070
Calculation method	D 3588
Water vapor content	D 1142
Total sulfur in fuel gas	D 1072
Hydrogen sulfide in natural gas	D 2725
Solid contaminants in gases	No recognized standard method. The following reference summarizes procedure: "Collection, Monitoring, and Identification of Particles in Gas Distribution Systems," American Gas Association (AGA) Final Report, Project P5-15, 1959, A. W. Doyle et al.

NOTE:
(1) These methods have been discontinued and are listed for information only.

(*c*) *gases* – naphthalene, hydrogen sulfide, oxides of sulfur, ammonia

The nature of these contaminants is discussed in more detail in Appendix B. Some typical contaminant level limits are given in para. B1.

3.2.6 Corrosive Agents. Certain substances which can occur in fuel gas can corrode materials in the fuel supply system, the gas turbine hot gas path, or the exhaust system. Proper selection of turbine blading materials can minimize hot corrosion. Ambient temperature corrosion can likewise be minimized by keeping the gas hot enough to be dry and/or by providing a corrosion-resistant fuel handling system. Specific corrosive contaminants are discussed in para. B1.

3.2.7 Summary of Gaseous Fuel Requirements. The properties which are normally required for evaluation of a fuel gas for gas turbine application are summarized in Table 1. There is no industry-wide standard for gaseous fuels analogous to ASTM D 2880 Standard Specification for Gas Turbine Fuel Oils. Many of the specific limits for gaseous fuel properties will depend on the specific gas turbine and auxiliary equipment and will be determined by the equipment manufacturer(s).

3.3 Gaseous Fuel Treatment

Delivered gas, especially natural gas, will practically always have had treatment to remove condensibles, water, and solid matter present at the source. Depending on the quality of this delivered gas, cleanup may be provided at the gas turbine site. Filtration is generally desirable to remove any solids, such as rust, which may have been picked up in the pipelines after the initial cleanup.

Water should be removed to prevent the formation of ice or solid gas hydrates (natural gas) at low temperatures such as at points of pressure reduction.

Fuel gases contaminated with hydrogen sulfide may be cleaned when required by a reversible absorption process to meet acceptable limits set by the manufacturer. In manufactured gases, tar and lampblack may be removed by scrubbing processes.

3.4 Test Methods for Gaseous Fuels

Sources of test methods for gaseous fuels are listed in Table 2.

Copyright ASME International
Provided by IHS under license with ASME
No reproduction or networking permitted without license from IHS
Not for Resale

APPENDIX A
LIQUID FUELS

(This Appendix is not a part of ANSI/ASME B133.7M-1985 and is included for information purposes only.)

A1 FUEL CONTAMINANTS AND TRACE METALS

The significance of fuel contaminants and trace metals in liquid fuels is covered in Appendix X1 of ASTM D 2880.

Trace metal contaminant levels in liquid fuel should follow the guidelines in Appendix X1, para. X1.3.4 of ASTM D 2880.

A2 SIGNIFICANCE OF LIQUID FUEL PROPERTIES

The significance of liquid fuel properties is covered in Appendix X2 of ASTM D 2880 (see Section 2 of this Standard).

A3 NAMES COMMONLY EMPLOYED FOR COMMERCIAL AND MARINE FUELS

D 2880	Other Names
No. 0-GT	Naphtha, VM&P, jet B, JP-4
No. 1-GT	Gas oil Kerosene Jet A and A-1 640 kerosene Stove oil JP-5 Heater oil Light diesel oil Light marine diesel fuel Marine diesel light Marine diesel medium Marine diesel medium fuel oil
No. 2-GT	Diesel fuel No. 2 fuel Home heating fuel Dieseline Furnace oil Heavy diesel oil Marine diesel fuel oil Marine diesel heavy Marine diesel oil Navy distillate fuel
No. 3-GT	Blended fuel (followed by a number, e.g., 400, 1000, 2000, etc., indicating Redwood No. 1 viscosity of blend @ 100°F) Heavy fuel oil High viscosity fuel oil Intermediate bunker, fuel oil 2, 3, etc. (for 200, 300, etc., see Redwood) Intermediate fuel MD 400, 600, etc. Light fuel oil 200, 400, etc. Thin fuel Thin fuel oil Medium fuel oil
No. 4-GT	Premium No. 6 fuel oil Premium industrial fuel oil (various S levels) Black oil Bunker fuel Bunker fuel oil Bunker C fuel Bunker C, PS-400 Bunker C Boiler fuel Boiler fuel oil Heavy fuel oil Heavy fuel, PS-400 Heavy No. 2 fuel oil Marine fuel oil No. 4 fuel oil No. 5 fuel oil No. 6 No. 6 fuel oil Steamship fuel oil

A4 OPERATING PROCEDURES FOR HANDLING AND STORAGE OF GAS TURBINE LIQUID FUELS

A4.1 Introduction

Most distillate fuels today, in being transported from the refinery to the gas turbine, are exposed to either tanker or pipeline transportation and sometimes both in various permutations and combinations. They also enter and leave numerous break-out and storage tanks during

Copyright ASME International
Provided by IHS under license with ASME
No reproduction or networking permitted without license from IHS
Not for Resale

transportation and almost certainly are carried, at some point in the trip, by transport truck or tank car. Fuel contamination can occur during any of these steps. Also, contamination can occur in the facilities at the gas turbine site itself.[1] Gas turbines, like all prime movers, operate best on clean fuel. Therefore, fuel contamination is a problem to be considered for all types of fuels and all types of gas turbines. However, gas turbines can be more sensitive to particulate matter, water, and metallic fuel contaminants than other types of combustion machinery. Gas turbines operating at higher average metal temperatures and higher pressures are more prone to corrosion and erosion.[2]

A4.2 Suggested Practices for the Receipt, Storage, and Handling of Liquid Fuels

A4.2.1 Distillate Fuels. Suggested practices for the receipt, storage, and handling of distillate turbine fuels are covered in Appendix X3 of ASTM D 2880.

Guidance for long-term storage of distillate fuels is provided in Appendix X5 of ASTM D 2880.

A4.2.2 Residual Fuels. Suggested practices for the receipt, storage, and handling of turbine fuels containing residual components are covered in Appendix X4 of ASTM D 2880.

A4.3 Current Fuel Systems

Typical distillate and residual fuel handling systems are covered in Appendices X3 and X4, respectively, of ASTM D 2880.

A4.4 Tank Design and Maintenance

The fuel storage tanks themselves are a very important and often overlooked portion of the fuel storage system and can be used very effectively as aids to fuel cleanliness if they are properly designed and effectively maintained.

After the tank is built, the inner walls should be sandblasted to remove excessive scale. All sandblast material should be very carefully and thoroughly removed from the tank walls and tank bottom. The walls should be wiped down immediately with oil to prevent rusting. To improve longtime fuel storage, the tank should have no copper, zinc, or vanadium alloys in contact with the fuel. Tank coatings have also been used successfully to minimize the scaling effect of the inside of the tank and to minimize the presence of bare metal surfaces in contact with fuel. Epoxies are fast gaining acceptance as one of the most trouble-free types of tank coating. Refer to MIL-C-4556D and MIL-C-23236 for the military specifications on tank coatings.

The fuel fill line to the tank should be located 18 in. (0.5 m) or more from the bottom of the tank. The fill line should be directed so as not to agitate the bottom sediment in the tank and should include a velocity diffuser to minimize the jet effect of the incoming fuel. The suction line from the tank should be fitted with a suction device to remove fuel from the upper level of the liquid in the tank. The result is a fuel tank system that has a maximum settlement time and minimum particulate carryover (see Fig. A1). This becomes particularly important in cold weather when the increased fuel viscosity hinders contaminant settling. A floating suction pickup is a very valuable asset when tanks are used and filled often.

The use of two tanks in place of one can also provide improved fuel settlement time. The concept of filling one tank and running from the other tank in a two-tank system provides a maximum settlement time and reduces filter maintenance significantly. The effective use of storage tank settlement time cannot be emphasized enough. After 24 to 48 hr of undisturbed settling time, a significant quantity of the water and particulates settle below the floating suction pickup point. The tank should have either a cone or sloping bottom along with a water draw (see Fig. A2). This minimizes the amount of water in contact with the fuel and can significantly reduce the problems associated with microbial growth. All horizontal cylindrical tanks should be sloped at least 2 in. in 10 ft (5 cm in 3 m) so that water will collect in one end where it can be removed by a sump pump (or gravity drain, if above ground). If possible, a sump should be placed at the low end of the tank so that water removal can be complete. A method of separating oil from the drain water must be installed. The type of system depends on the level of separation necessary to meet local environmental requirements.

Bottom water should be drawn off periodically to minimize accumulation. The draining frequency would be based on experience with a given installation.

Tanks should be cleaned at least ever 2 yr and tank walls should be wiped down by hand, with a solution of hypochlorite solution (Clorox) and water. Never wash down a tank with water containing soap or detergent

[1] Bradley, J. C., "Clean, Bright, and Dry," Manual on Requirements, Handling, and Quality Control of Gas Turbine Fuel, ASTM SPT 531, American Society for Testing and Materials, 1973, pp. 57–72.

[2] Winkler, M. F., "Management of Gas Turbine Fuel Systems," Manual on Requirements Handling, and Quality Control of Gas Turbine Fuel, ASTM STP 531, American Society for Testing and Materials, 1973, pp. 28–44.

Copyright ASME International
Provided by IHS under license with ASME
No reproduction or networking permitted without license from IHS
Not for Resale

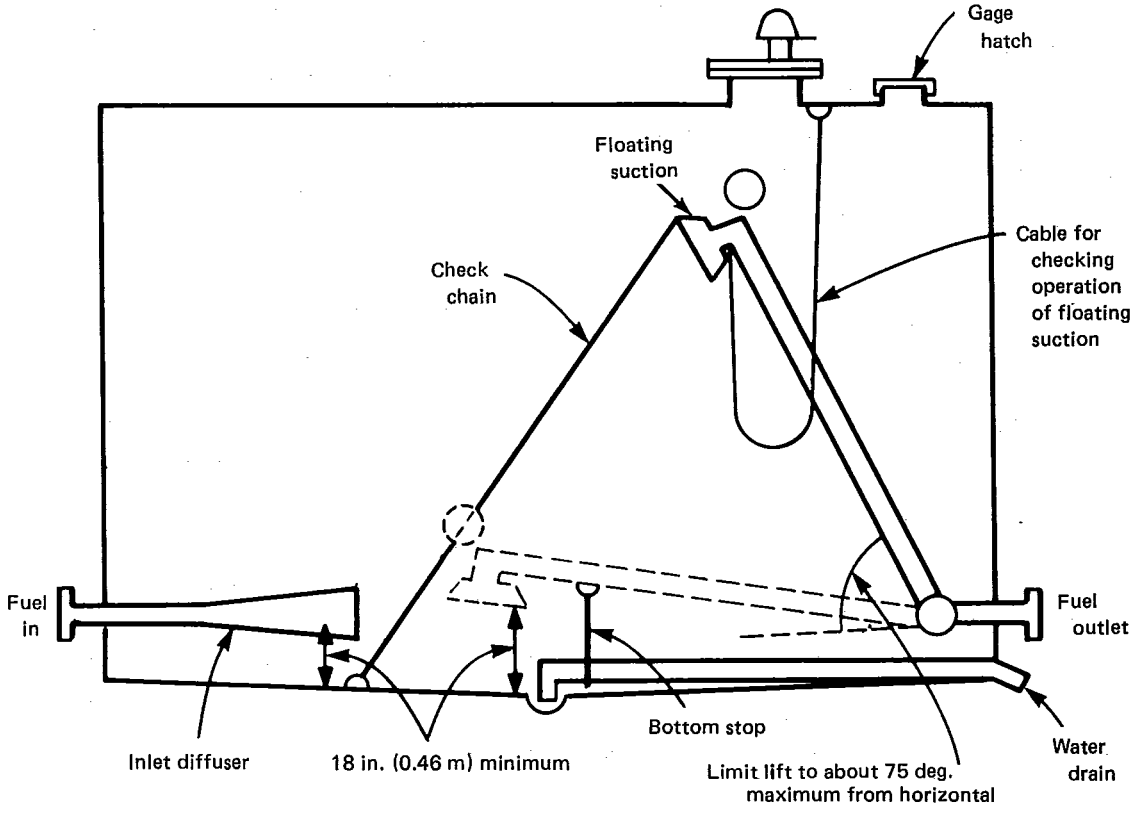

FIG. A1 INLET DIFFUSER AND FLOATING SUCTION

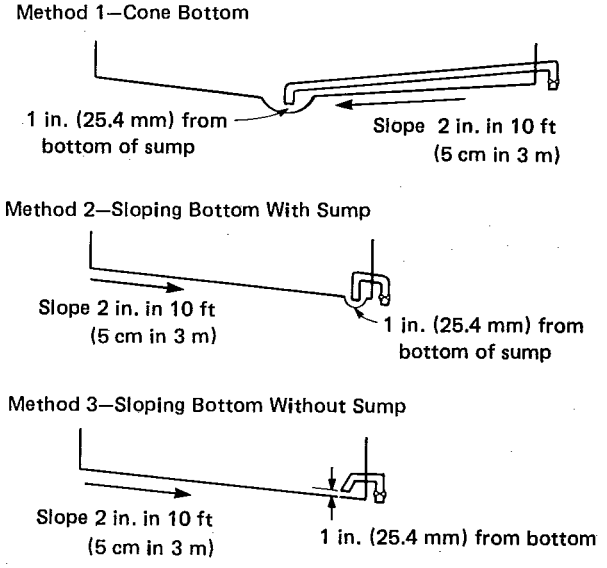

FIG. A2 TANK BOTTOM CONFIGURATIONS

Copyright ASME International
Provided by IHS under license with ASME
No reproduction or networking permitted without license from IHS
Not for Resale

since these are surfactants and are next to impossible to flush out of the system. Adequate ventilation and protective clothing should be employed when handling hypochlorite solutions.

A5 PROCEDURES FOR HANDLING LOW FLASH POINT LIQUID PETROLEUM FUELS

A5.1 Introduction

Paragraph A4 was concerned with handling procedures to be used with conventional or "commodity" type fuel oils in gas turbines. This section is concerned with procedures for use of low flash point "noncommodity" type petroleum fuels such as crude oils and naphthas. It has been prepared by incorporating minor modifications to the American Petroleum Institute (API) Petroleum Safety Data Sheet (PSD 2215) entitled "Crude Oil As A Burner Fuel" to reflect gas turbine, instead of boiler, applications. Crude oils and naphthas may have flash points below ambient temperatures and special precautions should be observed in their storage and handling. Proper equipment design and location for use of such fuels must also be considered. However, many years of experience have provided adequate information for design and operation of systems for storing, handling, and combustion of volatile low flash point petroleum fuels for gas turbines.

A5.2 General Properties

Crude oils and naphthas are not sold on the basis of generally recognized specifications. Therefore, it is essential that purchaser and seller reach an understanding on the range of fuel properties that may be tolerated.

The gravities of crude oils range from 10 to 50 deg. API (998-778 kg/m^3) but most considered for fuel fall in the 24 to 40 deg. API (908-823 kg/m^3) range. The higher calorific values range from 135,000 to 148,000 Btu/gal (37.63×10^6 to 41.25×10^6 kJ/m^3), depending on gravity. Pour points vary from -20 to 120°F (-29 to 49°C). High pour point crude oils are generally waxy and, as they approach their pour point temperature, a wax gel structure forms resulting in apparent solidification of the bulk of the oil. Agitation or pumping, depending upon the available and/or allowable power, may break the gel structure and initiate flow to the equipment. This gel structure can be minimized if the waxy crude oil is continuously agitated or pumped while cooling. To avoid filter problems, heating above the wax separation/dissolution temperature is usually recommended. Low pour point viscous crudes are generally heavy and are not liquefied by movement, therefore requiring heat. Most crudes contain volatile components that will vaporize more readily than fuel oils and their flash points will generally be lower than ambient temperatures.

Naphthas are petroleum fractions of variable boiling range but generally overlapping part of those of motor gasoline and kerosene. Typical high and low heating values are in the order of 127,000 Btu/gal (35.4×10^6 kJ/m^3) and 119,000 Btu/gal (33.2×10^6 kJ/m^3), respectively.

A5.3 Potential Problems

Some potential hazards associated with the use of volatile low flash point fuels are:

(*a*) *Liquid and Vapor Leakage.* Both liquid and vapor must be kept out of sewer systems, with safe collection of liquid leaks.

(*b*) *Weight of Vapor.* Crude oil and naphtha vapors are much heavier than air. Therefore, if liberated, they may collect in low areas and trenches, unless the areas are forcibly ventilated. Adequate ventilation should be provided in all areas where vapors from leakage may accumulate.

(*c*) *A Crude Oil Tank Boilover or Slop-over in the Event of Fire.* The use of floating roof tanks and water drawoff procedures eliminates this possibility. See National Fire Protection Association NFPA 30 for a description of boilover.

A5.4 Storage Tanks

Floating roof tanks should be considered for crude oil and naphtha storage to minimize vapor loss and reduce the explosion and fire hazard. In addition to reducing fire hazard, floating roofs may pay for themselves in vapor saving. Existing fixed roof tanks may be converted to covered floaters with venting arranged as in Appendix H of API Standard 650-1973. The use of plastic blankets and floating nonmetallic diaphragms, etc., which are easily submerged should be discouraged.

When constructing new tanks, consideration should be given to the open top or covered, pontoon, or double-deck type designed in accordance with API Standard 650, or consideration may be given to the covered roof type designed according to API Standard 650-1973, Appendix H. Covered pan type roofs are the least desirable because of the possibility of sinking. Covered aluminum pontoon type decks are acceptable. Covered floaters are recommended in cold areas to avoid the problems related to snow and its removal and rainwater drainage.

During the periods of initial fill, until the floating roof is buoyant, the space above the roof of both open or

Copyright ASME International
Provided by IHS under license with ASME
No reproduction or networking permitted without license from IHS
Not for Resale

covered type floating roof tanks will be within the flammable range for a period of time. In the case of a covered floating roof tank, this can be 18 to 24 hr. During this period, care must be taken to avoid the presence of outside ignition sources. Open top floating roof tanks present the same hazard, but for considerably shorter times of up to 8 hr. The times given are average and depend on flash point of the fuel, ambient temperatures, wind conditions, etc.

If cone roof tanks without modification are to be used, pressure-vacuum type conservation vents should be provided and the steel roofs properly maintained to prevent ignition of the tank vapor-space by an outside ignition source. Flame arrestors are not necessary and are not recommended due to the possibility of their being plugged so that an overpressure or collapse of the tank may occur during operations. Usually, the temperature of a stored crude oil will be sufficient to keep the proportion of hydrocarbons in the vapor space above the upper flammable limit (API RP 2003, p. 12 and API Bulletin 2513).

Adequate water drawoffs should be provided. After oil delivery, the tank should be allowed to settle for several hours and the water drained. If oil is received daily, water should be drained before each shipment arrives. Between shipments at longer intervals, water should be drawn daily until little or none can be obtained. After that, it should be drawn weekly. This procedure is advisable to prevent burner flameout from water or oil-water emulsion and should minimize the possibility of a boilover in the event of a tank fire. Provision must be made to separate oil or emulsions from the water prior to its discharge to a public sewer or natural body of water.

Care should be exercised in mixing crude oils or naphthas with heated residual fuels in fixed roof tanks so as not to exceed the vapor venting capacity of the tank.

Fill and recirculation lines in cone roof storage tanks should be installed to discharge below the liquid level to avoid free fall, which may cause a static discharge as well as increase vaporization. Most crude oils are not accumulators of electrostatic charges because of their relatively low electrical resistivity.

When storage tanks that contained crude must be cleaned or entered for maintenance, precautions in API RP 2015, Cleaning Petroleum Storage Tanks, should be followed.

Storage tanks should be diked to contain the volume of the largest tank in the area as specified in NFPA 30. The area within the dikes should be sloped away from tanks and their piping to a sump or catch basin. A drain with valve outside the dike wall should be provided to drain off storm water or fire water if location and terrain permit. The valve would normally be closed except to drain water as required. Tank mixers may be desirable to minimize problems of sludge accumulation and separation of successive shipments of varying gravity. It may be desirable to use vibration switch shutdowns on tank mixers.

A5.5 Fuel Heating

Naphthas and light distillate fuels do not need to be heated for proper atomization because they have viscosities at ambient conditions within the normal burner requirements. However, for certain waxy or viscous crudes, or low-ambient conditions, heating may be required to ensure free flow. Many crudes need only suction type tank heaters or external shell and tube heaters to meet viscosity requirements at the pump and fuel nozzles. Crude oil in tanks should never be heated above 200°F (93°C). See API PSD 2205.

A5.6 Piping

A leak-free piping system is important to the safe handling of all fuels and particularly crude oil and naphthas. Design, fabrication, assembly, and test of the system should conform to all applicable fire and safety codes and regulations. Preferably fuel oil piping should be of all welded construction with a minimum of connections and these should be flanged rather than screwed. Joints 2 in. nominal size and smaller may be welded, flanged, or screwed. If oil is to be piped to an existing installation, screwed fittings are satisfactory if they are leak free. Electrical bonding straps at connections are not necessary. Thermal relief valves should be installed when required on piping runs exceeding 100 ft (30 m), if the piping system can be blocked in. Relief valve discharge lines should be connected to the tank return line or should be piped to a collection vessel.

Fuel piping in the area of combustion use should be minimized. Where practical, strainers, control valves, etc., should be installed at a point remote from the combustion area. Hot lines (steam, other fuels, etc.) near crude or naphtha lines should be insulated or shielded to reduce flash hazard in case of a leak.

If flexible fuel line connections are necessary, they may be of the steel armored flexible hose or swivel joint type. Flexible hose should be double-wall type with welded (not brazed) connections. The annular space may be monitored by a pressure gage.

A5.7 Electrical Area Classification

The National Electrical Code, NFPA 70 (ANSI C1), classifies and defines requirements for electrical instal-

Copyright ASME International
Provided by IHS under license with ASME
No reproduction or networking permitted without license from IHS
Not for Resale

lations. A source of additional background is API RP 500A.

A5.8 Fire Protection

Facilities for extinguishing or controlling fires in the fuel storage area should be considered, depending on the availability of trained firefighters and adequate portable firefighting equipment, as follows:

(*a*) *Covered Pontoon or Double Deck Floating Roof Tanks*

(*1*) Permanent foam connections for extinguishing rim fires, designed according to NFPA 11.

(*2*) Portable equipment for foam hoses and water fog, used with properly located plant or city fire hydrants.

(*b*) *Covered Pan Type Floating Roof Tanks*

(*1*) Permanent foam connections for extinguishing rim fires, in accordance with NFPA 11, with fire detection and alarm.

(*2*) Portable foam equipment with hoses, flow rates, and foam concentrate sufficient to cover the entire surface in case the roof sinks. Properly located plant or city hydrants for water fog or water supply for foam.

(*c*) *Open Top Floating Roof Tanks.* Foam protection for the rim area in accordance with NFPA 11. If trained personnel are available, fixed protection is not necessary as a rim fire can be extinguished with dry chemical from hand extinguishers or small foam hose streams directed into the seal area. Roof drains should be valved. The roof should be bonded to the tank shell to prevent rim fires due to electrical disturbances in the atmosphere. Bonding should be designed as specified in NFPA 78.

(*d*) *Cone Roof Tanks.* Foam chambers or subsurface injection in accordance with NFPA 11. If trained personnel are available, portable foam towers or monitors may suffice.

(*e*) *Pumping Station.* Foam and portable dry chemical extinguishers for fire protection should be installed per NFPA 10 and 11.

A5.9 Combustible Gas Detectors

Combustible gas detectors should be considered where there is a possibility of oil escape without detection. Sampling points might be considered for:

(*a*) turbine housing area
(*b*) pump rooms
(*c*) indoor control valve area
(*d*) pipe trenches

Detectors may be connected to a control area console containing an audible alarm with indicator or recorder.

A5.10 Ignition Sources

Smoking, open lights, fires, matches, and other ignition sources should be prohibited in all areas where low flash point fuels are stored, pumped, or metered. Such areas should be tested for the presence of flammable vapors and made safe before welding or similar hot work is started and frequently monitored until job completion. Ventilation may be considered as an alternate to monitoring.

A5.11 Grounding

Grounding should be in accordance with NFPA 77.

A5.12 Emergency Planning

Fire drills and coordination with the local fire authority should be considered as a part of emergency planning.

A5.13 Ventilation

Ventilation should be ensured or provided at:
(a) turbine area
(b) pump area
(c) areas where hydrocarbon vapors can accumulate

Ventilation should be at a rate designed to reduce possible vaporization from a leak to a fraction of the lower explosive limit.

A5.14 Safety Controls

All types of fuel oil storage tanks should be provided with a level gage with high level alarm. A low level alarm to ensure that the roof remains floating should be considered for floating roof tanks.

A5.15 References

Guidelines for designing systems with the proper safeguards may be found in the latest edition of the following publications:

NFPA 10	Standard for the Installation of Portable Fire Extinguishers
NFPA 11	Foam Fire Extinguishing Systems
NFPA 15	Water Spray Fixed Systems
NFPA 30	Flammable and Combustible Liquids Code
NFPA 70 (ANSI C1)	National Electric Code
NFPA 77	Static Electricity Code

Copyright ASME International
Provided by IHS under license with ASME
No reproduction or networking permitted without license from IHS
Not for Resale

NFPA 78	Lightning Protection Code
NFPA 85D	Prevention of Explosions in Fuel Oil Fired Multiple Burner Boiler Furnaces
API RP500A	Recommended Practice for Classification of Areas for Electrical Installations in Petroleum Refineries
API RP 2003	Recommended Practice for Protection Against Ignitions Arising out of Static Lightning and Stray Currents
API RP 2015	Recommended Practice for Cleaning Petroleum Storage Tanks [for tank entry procedures, see p. 11.]
API Bulletin 2513	Evaporation Loss in the Petroleum Industry – Causes and Control – 1959 (Reaffirmed 1973)
API Standard 620	Recommended Rules for Design and Construction of Large, Welded, Low Pressure Storage Tanks
API Standard 650	Welded Steel Tanks for Oil Storage
API PSD 2205	Guide for the Safe Storage and Loading of Heavy Oil and Asphalt
API PSD 2215	Petroleum Safety Data Sheet

Copyright ASME International
Provided by IHS under license with ASME
No reproduction or networking permitted without license from IHS
Not for Resale

APPENDIX B
GASEOUS FUELS

(This Appendix is not a part of ANSI/ASME B133.7M-1985 and is included for information purposes only.)

B1 FUEL GAS PROPERTIES

B1.1 Gaseous Fuel Types

Gaseous fuels are combustible gases or mixtures of combustible and inert gases of various compositions covering a wide range of heat contents. The combustible components are methane, other low molecular weight hydrocarbons, hydrogen, and carbon monoxide. The major inert components are nitrogen, carbon dioxide, and water vapor.

Gaseous fuels may be burned alone or in combination with liquid fuels in a dual fuel application. One reason for dual application is local or seasonal fuel availability problems.

These fuels fall into three general classes according to heat content: high, intermediate, and low. Table B1 shows typical fuels and fuel properties in these classes.

B1.2 Natural Gases (High Heat Content Gas)

B1.2.1 Natural Gas. This is a clean burning fuel composed largely of methane with small amounts of other hydrocarbons and inert gases. Most natural gas is sold as a "dry gas" where the liquid hydorcarbon content has been reduced to a maximum of 0.1 gal of liquid per 1000 ft^3 of gas (12 L per 1000 m^3). Natural gases may be subdivided into the following three classes.

(*a*) *High Heat Content Gas.* This contains significant amounts of ethane and propane in addition to methane.

(*b*) *High Methane Content Gas.* This contains 88 to 96% methane.

(*c*) *High Inert Content Natural Gas.* This contains 6 to 16% inert gases such as nitrogen and carbon dioxide.

B1.2.2 Sour Gas. In certain areas of the world, natural gas may have appreciable levels of hydrogen sulfide as a significant contaminant; this is known as *sour gas*. This hydrogen sulfide may be removed by fuel treatment. In most cases, it may be burned directly in the gas turbine if the proper selection is made of materials and components in the gas turbine and fuel system.

B1.3 Manufactured Gases (Intermediate Heat Content)

These are manufactured fuels with high contents of hydrogen, carbon monoxide, or both. Although they have lower heat content than natural gas, the burning velocity is higher than that of natural gas. Coal gas and water gas have high hydrogen contents while producer gas has a high carbon monoxide content.

Manufactured gases tend to have more contaminants than natural gas and generally require more extensive cleanup. They may be further classified by their manufacturing processes:

(*a*) *coal gas* – produced by low temperature carbonization of coal in the absence of air. Relatively high in hydrogen and methane.

(*b*) *coke oven gas* – similar to coal gas, a by-product of coke production

(*c*) *water gas* – product of steam passed through glowing coke. High in carbon monoxide and hydrogen.

(*d*) *refinery gas* – a by-product of petroleum refining; predominantly hydrocarbons, but also may contain significant proportions of hydrogen.

B1.4 Low Heat Content Gases

The gases in this class have high concentrations of noncondensible, noncombustible constituents; namely, nitrogen and carbon dioxide. For many gas turbine designs, they may have to be blended with other gaseous fuels to increase the heat content. Special fuel and combustion system designs are necessary to burn the lowest calorific value gases by themselves.

These gases have greater contamination than natural gas and usually require cleanup.

Peak reaction zone temperatures in low heat content gas combustion may be considerably lower than with

Copyright ASME International
Provided by IHS under license with ASME
No reproduction or networking permitted without license from IHS
Not for Resale

TABLE B1 TYPICAL PROPERTIES OF COMMON GASEOUS FUELS

	Type of Gas (Reference)					
	Natural Gas (B1.2.1)	Coal Gas [B1.3(a)]	Coke Oven Gas [B1.3(b)]	Water Gas [B1.3(c)]	Coal Gasification Gas (1) [B1.4(c)]	Blast Furnace Gas [B1.4(b)]
Typical Calorific Value Range						
High Heating Value – MJ/m^3 (2)	32–48	19–26	20–24	10–18	4–6 (2)	3–3.5
Specific Gravity (Air = 1)	0.58–0.72	0.41–0.48	0.40–0.45	–	0.7–0.8	0.95–1.05
Composition, Volume %						
Methane, CH_4	75–97	20–35	28–32	1–9	2–6	–
Other Hydrocarbons, CH	2–20	2–4	2–4	0–8	–	–
Hydrogen, H_2	–	40–55	50–55	40–49	12–25	1–4
Carbon Monoxide, CO	–	5–15	5–7	34–41	15–30	25–30
Nitrogen, N_2	1–16	4–11	1–6	5	40–45	55–60
Carbon Dioxide, CO_2	0–1	2–4	2–3	5	3–10	8–16
Water, H_2O	–	–	–	–	10–30	–

NOTES:
(1) Air-blown; oxygen-blown gas would have about three times the heat content.
(2) One MJ/m^3 = 239 $kcal/m^3$ or 26.9 Btu/ft^3.

other gases – a condition which can reduce the formation of the oxides of nitrogen or NO_x.

Low heat content gases may be classified as follows:

(*a*) *producer gas* – produced by passing air through a bed of incandescent coke. Essentially a mixture of carbon monoxide and nitrogen.

(*b*) *blast furnace gas* – by-product of pig iron production. Similar to producer gas but with higher carbon dioxide content.

(*c*) *coal gasification gas* – these low heat content gases are made by the oxidation of coal under pressure. They contain carbon monoxide, hydrogen, and small amounts of methane. They are high in noncombustible gases. Injection of oxygen rather than air in manufacture results in higher heat content due to lower nitrogen contents.

B1.5 Fuel Gas Contaminants

B1.5.1 Liquid Hydrocarbons. The presence of any liquid hydrocarbons in the fuel reaching the turbine fuel system can cause large variations in heat input; in severe cases, slugs of liquid in the turbine combustor can damage the combustor and hot section from flames beyond the normal flame zone. Compressor stations in pipelines have liquid separators intended to remove liquids, but small droplets are not easily separated. Therefore, it is recommended that the fuel gas stream be cleaned with suitable separating equipment to prevent liquids from entering the gas turbine. Separating equipment should include liquid knockout pots with a demister.

B1.5.2 Hydrogen Sulfide. Hydrogen sulfide can occur both in natural gas (sour gas) and manufactured gases. It is corrosive to some metals used in fuel gas systems, the corrosiveness being more severe in the presence of water and at high pressures. For conventional fuel systems, the concentration of hydrogen sulfide must be limited. With proper selection of materials in the fuel system, gases with high hydrogen sulfide contents can be successfully burned.

Hydrogen sulfide results in sulfur oxide in the exhaust gas. Where exhaust heat recovery equipment is used, the total sulfur level including hydrogen sulfide may have to be limited to prevent acid corrosion, or the operating conditions or equipment may have to be modified.

B1.5.3 Total Sulfur. In addition to hydrogen sulfide, many manufactured gas fuels contain organic sulfur compounds which are normally removed before delivery to the user. Organic sulfur compounds include carbon disulfide, carbonyl sulfide, thiophene, and mercaptans. They occur largely in manufactured gas, but mercaptans are also found in small quantities in natural gas. These compounds are corrosive to certain metals, especially

Copyright ASME International
Provided by IHS under license with ASME
No reproduction or networking permitted without license from IHS
Not for Resale

copper. Mercaptans have also been found responsible for the formation of certain gums. As with hydrogen sulfide, organic sulfur compounds form sulfur dioxide during combustion.

B1.5.4 Gas Hydrates. Solid crystals of an ice-hydrocarbon addition compound tend to form in natural gas systems where the pressure and water contents are high and the temperature is low. Such deposits can cause blockages. Keeping the water content low will minimize gas hydrate formation. Methyl alcohol has been used in severe cases to prevent crystal formation.

B1.5.5 Naphthalene. Naphthalene, an aromatic hydrocarbon, is present in some coal gases and is normally scrubbed out of the gas before delivery. Naphthalene is a subliming solid with a high vapor pressure. A fuel gas containing gaseous naphthalene may form solid naphthalene deposits in the fuel system where the temperature is low.

B1.5.6 Tar. Tar is a crude black mixture of hydrocarbons that is condensed from manufactured gas when it is cooled to ordinary temperatures. It is normally removed during manufacture to prevent fouling problems in the fuel control and fuel handling systems.

B1.5.7 Ammonia. Ammonia from manufactured gas can cause corrosion to copper alloys in the fuel system. It forms nitrogen oxides in combustion which are undesirable from an emission standpoint.

B1.5.8 Nitric Oxide. Nitric oxide even in relatively small quantities can catalyze the formation of gums and solid deposits from unsaturated hydrocarbons. This can be quite troublesone as the reaction can occur after the filter stage since both reactants are gases. Thus, deposits can be formed in lines between a filter and the gas combustion controls. Nitric oxide can be removed by electrical treating or absorption.

B1.5.9 Unsaturated Hydrocarbons. Unsaturated hydrocarbons, typified by ethylene and cyclopentadiene, can polymerize in the gaseous state to form gums and deposits in the fuel system. This polymerization is accelerated by catalysts such as nitric oxide (see B1.5.8).

B1.5.10 Inert Solids. Soil dirt (complex aluminum silicates), fine sand, carbon, lampblack, and rust must be removed from gas streams since thay can cause plugging in the gas control system. Dirt is normally removed at the source, but fine scale is often picked up by the gas as it passes through gas transmission lines. Therefore, filters are necessary at the turbine site.

B1.5.11 Alkali Metals. Sodium and potassium salts must be at very low levels both in the fuel gas and in the turbine inlet air. In the presence of water they can cause metal corrosion in the fuel system, but the main concern is hot corrosion of the gas turbine hot gas path parts. To cause hot corrosion, sulfur must also be present since it is the alkali metal sulfates formed during combustion which cause corrosion (sulfidation attack). Natural gas is normally free of alkali metals. Coals contain potassium and sodium in varying amounts depending on their source. Fuel gas manufactured from coal could have alkali metal carryover unless proper fuel cleanup is provided. The alkali metal (sodium and potassium) concentration levels allowable in a gaseous fuel are the same as for a liquid fuel based on the same trace metal concentrations in the combustion exhaust gas.

B1.5.12 Contaminant Limits. Unlike liquid gas turbine fuels, there are no accepted industry-wide standards for limits on the gaseous fuel contaminants described in B1.5.1-B1.5.11. Some typical limits are given for information in Table B2. Specifying contaminant limits for gaseous fuels can be complicated by the fact that the fuel/air ratio in the gas turbine varies over a wide range due to the wide range of heat content of gaseous fuels. (This is not true of liquid fuels where the heat content range is narrow.)

Contaminants affecting only the fuel system equipment can be specified on the basis of the concentration in the fuel. This could include naphthalene, tar, and nitric oxide as examples. Contaminants affecting the gas turbine hot gas path or exhaust system such as alkali metals, potentially abrasive solids, and total sulfur content should be based on the heat content of the gas. Covering the range from "low-Btu" gases to natural gas, the heat content varies by a factor of about 10 to 1.

This factor is reflected in the fuel-to-air ratio entering the turbine combustor.

Contaminant levels are specified by each equipment manufacturer for the class of gaseous fuel to be burned.

B2 CALCULATION OF SPECIFIC GRAVITY AND CALORIFIC VALUE OF GASEOUS FUELS

B2.1 Specific Gravity and Density Calculation

As an alternative to direct measurement (ANSI Z77.12), the specific gravity and density of a gas mixture may be calculated from its analysis by computing the molecular weight of the mixture. The latter is obtained by (1) multiplying the volume *fraction* of each constituent in the mixture by the molecular weight of that constituent, and (2) summing these products for all constituents of the mixture. (The volume fraction is the volume percentage divided by 100.)

Copyright ASME International
Provided by IHS under license with ASME
No reproduction or networking permitted without license from IHS
Not for Resale

TABLE B2 TYPICAL LIMITS OF SOME CONTAMINANTS IN GASEOUS FUELS

Total solids, max.	30 ppm (wt), no more than 1% of which should have a setting velocity in air greater than 6 mm/s, and not more than 0.1% of which should have a settling velocity greater than 10 mm/s. (For average dirt particles these are equivalent to spherical particle diameters of 8 and 11 microns.)
Liquid hydrocarbons and gas hydrates	Maximum condensation temperature at least 50°F (28°C) below minimum system temperature
Water	(Same as above.)
Hydrogen sulfide, max.	0.01 g/m^3 (1)
Nitric oxide, max.	0.025 g/m^3 (1)
Ammonia, max.	0.025 g/m^3 (1)
Naphthalene, max.	0.025 g/m^3 (1)

NOTE:
(1) American Gas Association, Gas Engineering Handbook (1977).

B2.1.1 Molecular Weight. An example is shown of a molecular weight calculation for the gaseous mixture:

Methane (CH_4)	77.5 Vol %
Ethane (C_2H_6)	16.0 Vol %
Carbon Dioxide (CO_2)	6.5 Vol %
	100.0 Vol %

(1) Constituent	(2) Vol %	(3) Vol Fraction	(4) Mol Wt	(5) Product (3) × (4)
CH_4	77.5	0.775	16.041	12.432
C_2H_6	16.0	0.160	30.067	4.811
CO_2	6.5	0.065	44.010	2.861
			Avg. molecular weight of mixture =	20.104

B2.1.2 Specific Gravity. The specific gravity of the gas is the ratio of the average molecular weight of the gas to the molecular weight of air. The molecular weight of air at ISO conditions is 28.855.

$$\text{Specific gravity} = \frac{20.104}{28.855} = 0.697 \text{ (ISO)}$$

(Dry air has a molecular weight of 28.996, giving a specific gravity of 0.693 for this gas referenced to dry air.)

B2.1.3 Density. The density of a gas is obtained by dividing the average molecular weight of the gas by molar volume. The molar volume varies slightly with the compressibility factors of the components, but for most engineering purposes it is sufficiently accurate to use a volume of 23.645 m^3/kmol at ISO conditions (15°C, 760 mm Hg).

$$\text{Density of gas mixture} = \frac{20.104}{23.645} = 0.850 \text{ kg/m}^3 \text{ at ISO conditions}$$

$$\text{Density of air} = \frac{28.855}{23.645} = 1.220 \text{ kg/m}^3 \text{ at ISO conditions}$$

B2.2 Calorific Value Calculation

As an alternative to direct measurement (ANSI Z68.1 or ANSI Z68.2), a relatively accurate calorific value can be calculated when the composition of the fuel gas is known.

It is the sum of the products of the weight fraction of each constituent and its calorific value on a weight basis. The standard calorific value for the individual component gases may be obtained from reference books on gas engineering.

For the gas given in example B2.1, the calorific values are obtained as follows.

Methane = 12.43/20.104 = 0.618
Ethane = 4.81/20.104 = 0.239

B2.2.1 Higher Calorific Value. Using higher calorific values (HCV) of 55 543 kJ/kg and 51 917 kJ/kg for

Copyright ASME International
Provided by IHS under license with ASME
No reproduction or networking permitted without license from IHS
Not for Resale

TABLE B3 CONVERSION FACTORS

	To Convert From	To	Multiply By
Volume	ft^3	m^3	2.832×10^{-2}
Density	lb/ft^3	kg/m^3	16.0
Pressure	kg/mm^2	kilopascals (kPa)	9.81×10^3
	lb/in^2	kilopascals (kPa)	6.90
	lb/in^2	kg/mm^2	7.03×10^{-4}
	lb/in^2	atmospheres	6.81×10^{-2}
	atmospheres	kilopascals (kPa)	101.3
	atmospheres	kg/mm^2	1.033×10^{-2}
Calorific value (wt basis)	kcal/kg	kilojoules/kg	4.187
	Btu/lb	kilojoules/kg	2.326
	Btu/lb	kcal/kg	0.555
Calorific value (vol basis)	$kcal/m^3$	$kilojoules/m^3$	4.187
	Btu/ft^3	$kilojoules/m^3$	37.26
	Btu/ft^3	$kcal/m^3$	8.90
Contaminant level	$lb/1000\ ft^3$	g/m^3	16.05
	$grains/100\ ft^3$	g/m^3	2.29×10^{-2}
	$grains/100\ ft^3$	$lb/1000\ ft^3$	1.43×10^{-3}
	$grains/100\ ft^3$	ppm (wt)	18.67/sp gr (1)
	ppm (wt)	g/m^3	$1.23 \times 10^{-3} \times$ sp gr (1)
	ppm (wt)	$lb/1000\ ft^3$	$7.65 \times 10^{-5} \times$ sp gr (1)

NOTE:
(1) sp gr = gas specific gravity vs. dry air at 15°C, 1 atmosphere.

methane and ethane, respectively, the higher calorific value of the gas mixture is:

$$HCV = 55\ 543\ (0.618) + 51\ 917\ (0.239)$$

$$= 46\ 733\ kJ/kg$$

B2.2.2 Lower Calorific Value. Using lower calorific values (LCV) of 50 056 kJ/kg and 47 525 kJ/kg for methane and ethane, respectively, the lower calorific value of the gas is:

$$LCV = 50\ 056\ (0.618) + 47\ 525\ (0.239)$$

$$= 42\ 293\ kJ/kg$$

B3 FUEL GAS UNITS – CONVERSION FACTORS

It is recommended that the international system of units (SI) be used for gaseous fuels. Since past and some current practices use other units, Table B3 has been included for convenience.

Copyright ASME International
Provided by IHS under license with ASME
No reproduction or networking permitted without license from IHS
Not for Resale

APPENDIX C
NONFUEL CONTAMINANTS (AIR AND WATER)

(This Appendix is not a part of ANSI/ASME B133.7M-1985 and is included for information purposes only.)

C1 INTRODUCTION

In addition to the contaminants in the fuel, the inlet air and water/steam injection fluids are other sources of trace metal contaminants which could enter the gas turbine and cause corrosion similar to that of the fuel contaminants. It is the *total contaminant* level in the *combustion products* that is important from a corrosion and deposit standpoint.

The inlet air contaminants can originate as sea salt aerosols, fly ash, desert sand, soil, dust, fertilizers, and carryover from industrial processes.

The water or steam injected for NO_x control can contain alkali or other trace metals unless properly conditioned and handled.

C2 RECOMMENDED LIMITS

C2.1 The recommended limits for contaminant levels in inlet air at the gas turbine compressor or water/steam injection systems are generally as follows:

Inlet air:	sodium + potassium	0.002 ppm (wt) max. to 0.020 ppm (wt) max. in air
Water/steam:	sodium + potassium	0.025 ppm (wt) max. to 1.0 ppm (wt) max. in water/steam

C2.2 To meet these limits, the following should be considered:

(*a*) inlet protection such as inlet filtration or inlet demisting

(*b*) water/steam purification or system modifications resulting in improved quality of the water.

C2.3 Based on the economics of the situation, it may be desirable to consider selection of a better quality fuel to compensate for impurities in the combustion air or injection water.

C2.4 The final controlling relationship between inlet air, water/steam quality, and fuel quality is as follows:

$$\frac{\text{Air mass flow}}{\text{Fuel mass flow}} \times \text{inlet air contaminations [ppm (wt)]}$$

$$+ \frac{\text{Water mass flow}}{\text{Fuel mass flow}} \times \text{steam/water contaminations [ppm (wt)]}$$

$$+ \text{Fuel contaminants [ppm (wt)]}$$

is not to exceed

Manufacturer's maximum fuel contaminants [ppm (wt)] limits

i.e., the sum of all contaminants (referred to mass flow of fuel) is not to exceed the manufacturer's maximum fuel contaminants limit.

Copyright ASME International
Provided by IHS under license with ASME
No reproduction or networking permitted without license from IHS
Not for Resale

APPENDIX D
SMOKE FORMATION IN GAS TURBINES

(This Appendix is not a part of ANSI/ASME B133.7M-1985 and is included for information purposes only.)

D1 SCOPE

This Appendix concerns itself only with visible particulate emissions from gas turbines. Invisible particulate and gaseous emissions are not considered here. Neither are uncontrollable factors which can influence the exhaust visibility, such as sky background or local wind conditions.

D2 INTRODUCTION

The exact mechanism by which smoke is formed during the combustion of fuel is not completely understood. However, it is the general consensus that smoke (or soot) results from the pyrolysis of fuel in fuel-rich high temperature pockets, and that this is a nonequilibrium process. Soot burnout will occur in high temperature oxygen-rich flames. The net rate of formation is dependent on the conditions in the combustor reaction zone and subsequent burnout. Above a certain threshold value of fuel/air ratio, the output of smoke increases tremendously with pressure and flame temperature. On the other hand, increased turbulence tends to reduce smoke. The fuel itself as well as its condition and the method of presentation to the combustor also affect the smoke output. Paraffins tend to burn more nearly smoke-free and aromatics are most prone to smoke. Certain fuel additives are effective in inhibiting smoke formation.

D3 GAS TURBINE DESIGN

Combustor design generally has a large effect on smoke. Most manufacturers have developed very low smoke combustors for their current production gas turbines. In some cases, retrofit packages are available. These special low smoke combustors are an effective means of smoke control.

D4 GAS TURBINE LOAD

Reducing load may help control smoke. However, economics sometimes mitigates against a large load reduction, except for a temporary or last-ditch means of control.

D5 FUEL PROPERTIES

Generally fuel properties, within a given grade of fuel, have much less effect on smoke than combustor design. Some of the fuel properties which can influence smoke are shown below:

(*a*) *Distillation.* High boiling fuels tend to produce more smoke than more volatile types. This is especially true during startup. Many gas turbines burning No. 3 or 4-GT fuels start up and shut down on No. 1 or 2-GT fuels.

(*b*) *Total Aromatics/Naphthalene Content.* Smoke tends to increase with increasing aromatic content. High molecular weight aromatics or naphthalenes usually have a greater effect than the light aromatics.

(*c*) *Carbon/Hydrogen Ratio.* Fuels with a high carbon/hydrogen ratio tend to produce more smoke. The C/H ratio is related to the total aromatic content, (b) above.

(*d*) *Carbon Residue.* Fuels with high carbon residue tend to generate more smoke, although the magnitude of this effect depends on the gas turbine design.

(*e*) *Viscosity.* Fuels of high viscosity tend to form smoke during combustion more readily than fuels of low viscosity. Heating of fuel may be required to reduce viscosity to a level compatible with fuel nozzle atomizing characteristics.

D6 FUEL ADDITIVES

Fuel additives that effectively reduce gas turbine smoke are available. Use of smoke reduction additives should be handled on a case-by-case basis, and under consultation with the manufacturer.

Copyright ASME International
Provided by IHS under license with ASME
No reproduction or networking permitted without license from IHS
Not for Resale

APPENDIX E

CROSS REFERENCE OF ASTM AND ANSI TEST METHODS

(This Appendix is not a part of ANSI/ASME B133.7M-1985 and is included for information purposes only.)

ASTM Designation	ANSI Designation
D 56	Z11.24
D 86	Z11.10
D 88	Z11.2
D 93	Z11.7
D 97	Z11.5
D 129	Z11.13
D 287	Z11.31
D 396	Z11.203
D 445	Z11.107
D 482	Z11.54
D 524	Z11.47
D 900 (1)	Z68.1
D 975	Z11.205
D 1070	Z77.12
D 1072	Z77.6
D 1136 (1)	Z77.1
D 1137 (1)	Z77.2
D 1142	Z77.3
D 1660	Z11.148
D 1740	Z11.187
D 1796	Z11.115
D 1826	Z68.2
D 1945	Z11.160
D 2161	Z11.129
D 2725	Z77.10
D 2787	Z11.316
D 2788	Z11.317
D 2880	Z11.312

NOTE:
(1) These methods have been discontinued and are given for information only.

Copyright ASME International
Provided by IHS under license with ASME
No reproduction or networking permitted without license from IHS
Not for Resale

AMERICAN NATIONAL STANDARDS FOR GAS TURBINES

Gas Turbine Terminology	B133.1M-1983
Basic Gas Turbine	B133.2-1977(R1983)
Procurement Standard for Gas Turbine Auxiliary Equipment	B133.3-1981
Gas Turbine Control and Protection Systems	B133.4-1978(R1984)
Procurement Standard for Gas Turbine Electrical Equipment	B133.5-1978(R1984)
Procurement Standard for Gas Turbine Ratings and Performance	B133.6-1978
Gas Turbine Fuels	B133.7M-1985
Gas Turbine Installation Sound Emissions	B133.8-1977(R1983)
Procurement Standard for Gas Turbine Environmental Requirements and Responsibilities.	B133.9-1979
Procurement Standard for Gas Turbine Information to be Supplied by User and Manufacturer	B133.10-1981
Procurement Standard for Gas Turbine Preparation for Shipping and Installation	B133.11-1982
Procurement Standard for Gas Turbine Maintenance and Safety	B133.12-1981
Procurement Standard for Gas Turbine Marine Applications	B133.16-1978(R1984)

K00086

Copyright ASME International
Provided by IHS under license with ASME
No reproduction or networking permitted without license from IHS

Not for Resale