ASME B107.57-2001

BRICKLAYERS' HAMMERS AND PROSPECTING PICKS: SAFETY REQUIREMENTS

AN AMERICAN NATIONAL STANDARD

The American Society of Mechanical Engineers

Copyright ASME International
Provided by IHS under license with ASME
No reproduction or networking permitted without license from IHS

Not for Resale

The American Society of Mechanical Engineers

AN AMERICAN NATIONAL STANDARD

BRICKLAYERS' HAMMERS AND PROSPECTING PICKS: SAFETY REQUIREMENTS

ASME B107.57-2001

Copyright ASME International
Provided by IHS under license with ASME
No reproduction or networking permitted without license from IHS
Not for Resale

Date of Issuance: August 31, 2001

This Standard will be revised when the Society approves the issuance of a new edition. There will be no addenda issued to this edition.

ASME will issue written replies to inquiries concerning interpretation of technical aspects of this Standard.

ASME is the registered trademark of The American Society of Mechanical Engineers.

This code or standard was developed under procedures accredited as meeting the criteria for American National Standards. The Standards Committee that approved the code or standard was balanced to assure that individuals from competent and concerned interests have had an opportunity to participate. The proposed code or standard was made available for public review and comment that provides an opportunity for additional public input from industry, academia, regulatory agencies, and the public-at-large.

ASME does not "approve," "rate," or "endorse" any item, construction, proprietary device, or activity.

ASME does not take any position with respect to the validity of any patent rights asserted in connection with any items mentioned in this document, and does not undertake to insure anyone utilizing a standard against liability for infringement of any applicable letters patent, nor assume any such liability. Users of a code or standard are expressly advised that determination of the validity of any such patent rights, and the risk of infringement of such rights, is entirely their own responsibility.

Participation by federal agency representative(s) or person(s) affiliated with industry is not to be interpreted as government or industry endorsement of this code or standard.

ASME accepts responsibility for only those interpretations of this document issued in accordance with the established ASME procedures and policies, which precludes the issuance of interpretations by individuals.

No part of this document may be reproduced in any form,
in an electronic retrieval system or otherwise,
without the prior written permission of the publisher.

The American Society of Mechanical Engineers
Three Park Avenue, New York, NY 10016-5990

Copyright © 2001 by
THE AMERICAN SOCIETY OF MECHANICAL ENGINEERS
All Rights Reserved
Printed in U.S.A.

Copyright ASME International
Provided by IHS under license with ASME
No reproduction or networking permitted without license from IHS

Not for Resale

FOREWORD

The development of this Standard was initiated by the Striking and Struck Tools Standards Committee, consisting of technical representatives of Manufacturer members of the Hand Tools Institute (HTI). This Standard was previously numbered ANSI/HTI B173.6-1991. The American National Standards Committee B107, Socket Wrenches and Drives, under sponsorship of The American Society of Mechanical Engineers, was reorganized as an ASME Standards Committee and its title was changed to Hand Tools and Accessories. In 1996, the B173 Committee merged with the B107 Committee and the B107 Committee scope was expanded to include safety considerations.

The purposes of this Standard are to define essential safety considerations specifically applicable to bricklayers' hammers and prospecting picks, to specify test methods to evaluate performance relating to the defined safety considerations, and to indicate limitations of safe use.

A principal change in this edition of the Standard is the accepted use of pictorial safety messages.

The format of this Standard is in accordance with "A Guide to Writing ASME Codes and Standards." Requests for interpretations of the technical requirements of this Standard should be expressed in writing to the Secretary, B107 Committee, at the address below.

Suggestions for the improvement of this Standard are welcome. They should be addressed to the Secretary, ASME B107 Committee, Three Park Avenue, New York, NY, 10016-5990.

The requirements of this Standard become effective at the time of publication.

This revision was approved as an American National Standard on January 3, 2001.

--`,,`-`-`,,`,,`,`,,`---

Copyright ASME International
Provided by IHS under license with ASME
No reproduction or networking permitted without license from IHS

Not for Resale

ASME STANDARDS COMMITTEE B107
Hand Tools and Accessories

(The following is the roster of the Committee at the time of approval of this Standard.)

OFFICERS

R. R. McCullough, *Chair*
R. B. Wright, *Vice Chair*
J. R. Bird, *Secretary*

COMMITTEE PERSONNEL

J. R. Bird, The American Society of Mechanical Engineers
R. M. Byrne, Trade Association Management, Inc.
J. S. Foote, *Alternate,* Trade Association Management, Inc.
J. D. Davidson, Sears Roebuck and Co.
A. Herskovitz, U.S. Army ARDEC
H. Kimball, Naval Air Warfare Center
C. M. Knapp, CASC/LGHB
J. C. Marvil, General Services Administration
J. M. Ster, *Alternate,* General Services Administration
G. E. Olson, Gene Olson Engineering Consultant, Ltd.
W. T. Pagac, Snap-On, Inc.
R. W. Reynolds, Stanley Mechanics Tools, Inc.
W. R. Wacker, BAC Associates, Inc.
R. B. Wright, Wright Tool Co.

SUBCOMMITTEE 4 — SAFETY STANDARDS

G. E. Olson, *Chair,* Gene Olson Engineering Consultant, Ltd.
J. Combites, Vaughan and Bushnell
J. D. Davidson, Sears Roebuck and Co.
W. T. Pagac, Snap-On, Inc.

Copyright ASME International
Provided by IHS under license with ASME
No reproduction or networking permitted without license from IHS
Not for Resale

CORRESPONDENCE WITH THE B107 COMMITTEE

General. ASME Standards are developed and maintained with the intent to represent the consensus of concerned interests. As such, users of this Standard may interact with the Committee by requesting interpretations, proposing revisions, and attending Committee meetings. Correspondence should be addressed to:

Secretary, B107 Standards Committee
The American Society of Mechanical Engineers
Three Park Avenue
New York, NY 10016-5990

Proposing Revisions. Revisions are made periodically to the Standard to incorporate changes that appear necessary or desirable, as demonstrated by the experience gained from the application of the Standard. Approved revisions will be published periodically.

The Committee welcomes proposals for revisions to this Standard. Such proposals should be as specific as possible, citing the paragraph number(s), the proposed wording, and a detailed description of the reasons for the proposal, including any pertinent documentation.

Interpretations. Upon request, the B107 Committee will render an interpretation of any requirement of the Standard. Interpretations can only be rendered in response to a written request sent to the Secretary of the B107 Standards Committee.

The request for interpretation should be clear and unambiguous. It is further recommended that the inquirer submit his/her request in the following format:

Subject: Cite the applicable paragraph number(s) and the topic of the inquiry.

Edition: Cite the applicable edition of the Standard for which the interpretation is being requested.

Question: Phrase the question as a request for an interpretation of a specific requirement suitable for general understanding and use, not as a request for an approval of a proprietary design or situation. The inquirer may also include any plans or drawings, which are necessary to explain the question; however, they should not contain proprietary names or information.

Requests that are not in this format may be rewritten in the appropriate format by the Committee prior to being answered, which may inadvertently change the intent of the original request.

ASME procedures provide for reconsideration of any interpretation when or if additional information that might affect an interpretation is available. Further, persons aggrieved by an interpretation may appeal to the cognizant ASME Committee or Subcommittee. ASME does not “approve,” “certify,” “rate,” or “endorse” any item, construction, proprietary device, or activity.

Attending Committee Meetings. The B107 Standards Committee regularly holds meetings, which are open to the public. Persons wishing to attend any meeting should contact the Secretary of the B107 Standards Committee.

Copyright ASME International
Provided by IHS under license with ASME
No reproduction or networking permitted without license from IHS
Not for Resale

CONTENTS

Foreword iii
Committee Roster iv
Correspondence With the B107 Committee v

1 General 1

2 Normative References 1

3 Definitions 2

4 General Requirements 2

5 Safety Requirements and Limitations of Use 4

Figures
1 Bricklayer's Hammer 3
2 Prospecting Pick 3
3 Typical Static Force Test 5

Table
1 Chemical Properties of Steel Blades 4

Copyright ASME International
Provided by IHS under license with ASME
No reproduction or networking permitted without license from IHS
Not for Resale

BRICKLAYERS' HAMMERS AND PROSPECTING PICKS: SAFETY REQUIREMENTS

1 GENERAL

1.1 Scope

This Standard provides safety requirements for the design, construction, testing, and use of bricklayers' hammers that are intended specifically for use in setting and cutting (splitting) bricks, masonry tile, chipping mortar from bricks, and also of prospecting picks that are intended specifically for use in pulling samples from the ground.

1.2 Purpose

This Standard is intended to serve as a guide in selecting, testing, and using the hand tools covered. Details of design, testing, and use of the tools covered are specified only as they relate to safety. It is not the purpose of this Standard to specify the details of manufacturing.

The Standard is also meant to serve as a guide in developing manuals and posters and for training personnel to work safely.

1.3 Application

This Standard may be used as a guide by state authorities or other regulatory bodies in the formation of laws or regulations. It is also intended for voluntary use by establishments that use or manufacture the tools covered.

The methods employed to ensure compliance with this Standard shall be determined by the proper regulatory or administrative authority.

1.4 Shall and Should

Mandatory requirements of this Standard are characterized by the word *shall*. If a provision is of an advisory nature, it is indicated by the word *should* or is stated as a recommendation.

1.5 Equivalent

The word *equivalent* in this Standard shall be interpreted to mean alternative designs or features that will provide an equal degree of safety.

2 NORMATIVE REFERENCES

The following documents form a part of this Standard to the extent specified herein. At the time of publication, the editions indicated were valid. All standards are subject to revision and parties to agreement based on this Standard are encouraged to investigate the possibility of applying the most recent edition of the standards indicated below.

ANSI Z87.1-1989, Practice for Occupational and Educational Eye and Face Protection
ANSI Z87.1a-1991, Supplement
ANSI Z535.4-1991, Product Safety Signs and Labels

Publisher: American National Standards Institute (ANSI), 11 West 42nd Street, New York, NY 10036

ASTM A 322-91, Standard Specification for Steel Bars, Alloy, Standard Grades
ASTM A 576-90b, Standard Specification for Steel Bars, Carbon, Hot-Wrought, Special Quality
ASTM A 681-94, Standard Specification for Tool Steels Alloy
ASTM E 18-94, Standard Test Methods for Rockwell Hardness and Rockwell Superficial Hardness of Metallic Materials

Publisher: American Society for Testing Materials (ASTM), 100 Barr Harbor Drive, West Conshohocken, PA 19428

Guide to Hand Tools — Selection, Safety Tips, Proper Use and Care

Publisher: Hand Tools Institute (HTI), 25 North Broadway, Tarrytown, NY 10591

3 DEFINITIONS (See Figs. 1 and 2, as applicable.)

For the purpose of this Standard, the following definitions apply:

bell (poll): the portion of the hammerhead directly behind the face.

bevel: the underside of the cutting edge (bit) of the bricklayers' hammer.

Copyright ASME International
Provided by IHS under license with ASME
No reproduction or networking permitted without license from IHS
Not for Resale

blade: the tapered portion of the bricklayers' hammerhead directly opposite the face.

chamfer: the angled flat surface or equivalent radius encircling the perimeter of the face of the bricklayers' hammer and prospecting picks and at both ends of the cutting edge of the bricklayers' hammer.

cheeks: see *sides*.

cutting edge (bit): the edge directly opposite the face of the bricklayers' hammerhead at the extreme end of the blade.

eye: an opening or aperture in the bricklayers' hammer or prospecting pick located between the blade or pick and the face into which the handle is inserted if the handle is separate.

face: the portion of the bricklayers' hammerhead or prospecting pick head, exclusive of the bell and chamfer, located on the end of the head opposite from the blade or pick end.

handle: the portion that protrudes from the hammerhead or pick head and by which the tool is held.

handle grip: material securely attached to the grip end of some styles of hammer or pick handles.

hardness: the condition of the hammerhead or pick head resulting from heat treatment.

neck: on some bricklayers' hammers of alternative design (see Fig. 1), the portion of the hammerhead between the bell and the hammer eye.

pick: the portion of the prospecting pick directly opposite the face.

safety message: the information imprinted on or affixed to the hammer that is intended to promote safety.

sides: outside surfaces of the hammer-head, on either side of the eye, located between the blade and chamfer or neck on bricklayers' hammers and the pick end and chamfer on prospecting picks; also called *cheeks*.

top of hammer or pick: the portion of the hammer or prospecting pick head opposite the handle entry.

4 GENERAL REQUIREMENTS

4.1 Design

Bricklayers' hammers shall have a face on one end of the head and a cutting edge on the opposite end for use in setting and cutting (splitting) bricks, masonry tile, concrete tile, and concrete blocks and for chipping mortar from bricks. Prospecting picks shall have a face on one end of the head and a pick on the opposite end of the head for use in pulling samples from the ground.

4.1.1 The faces of the heads shall be flat.

4.1.2 The faces shall have a chamfer of 45 deg (or equivalent radius) all around the perimeter with the width equal to approximately 0.06 in. (1.5 mm).

4.1.3 The underside of the cutting edge or bit of the bricklayers' hammer shall have a bevel of approximately 30 deg to 45 deg. The two outer corners of the cutting edge shall have a chamfer of approximately 45 deg or equivalent radius.

4.1.4 Handles shall be of any design, including ergonomic, that can withstand the tests specified in paras. 4.4.3 and 4.4.4.

4.1.5 The head and handle shall be free of nonfunctional sharp edges, points, and surface roughness that could inflict personal injury on the user while handling the bricklayers' hammer or prospecting pick.

4.2 Materials

4.2.1 Heads shall be made from special-quality, fine-grain, hot-rolled, carbon steel bars conforming to the chemical requirements specified in Table 1 and to ASTM A 576 or from an equivalent material such as alloy steel conforming to ASTM A 322 or ASTM A 681.

4.2.2 Heads shall be free of manufacturing and material defects, such as seams, laps, pipes, and cold shuts that could jeopardize sound construction. They shall conform to requirements for mechanical properties specified in para. 4.3 and shall withstand the striking test specified in para. 4.4.3.

4.2.3 Handles shall be made of any suitable material that will withstand the test requirements in paras. 4.4.3 and 4.4.4.

4.3 Mechanical Properties

4.3.1 The faces of the hammerheads and pick heads shall be hardened and tempered to a hardness of 45 HRC to 60 HRC or equivalent. The steel directly behind the face shall be a toughened supporting core, gradually decreasing in hardness.

--`,`,`,,`,,`,`,,`---

Copyright ASME International
Provided by IHS under license with ASME
No reproduction or networking permitted without license from IHS

Not for Resale

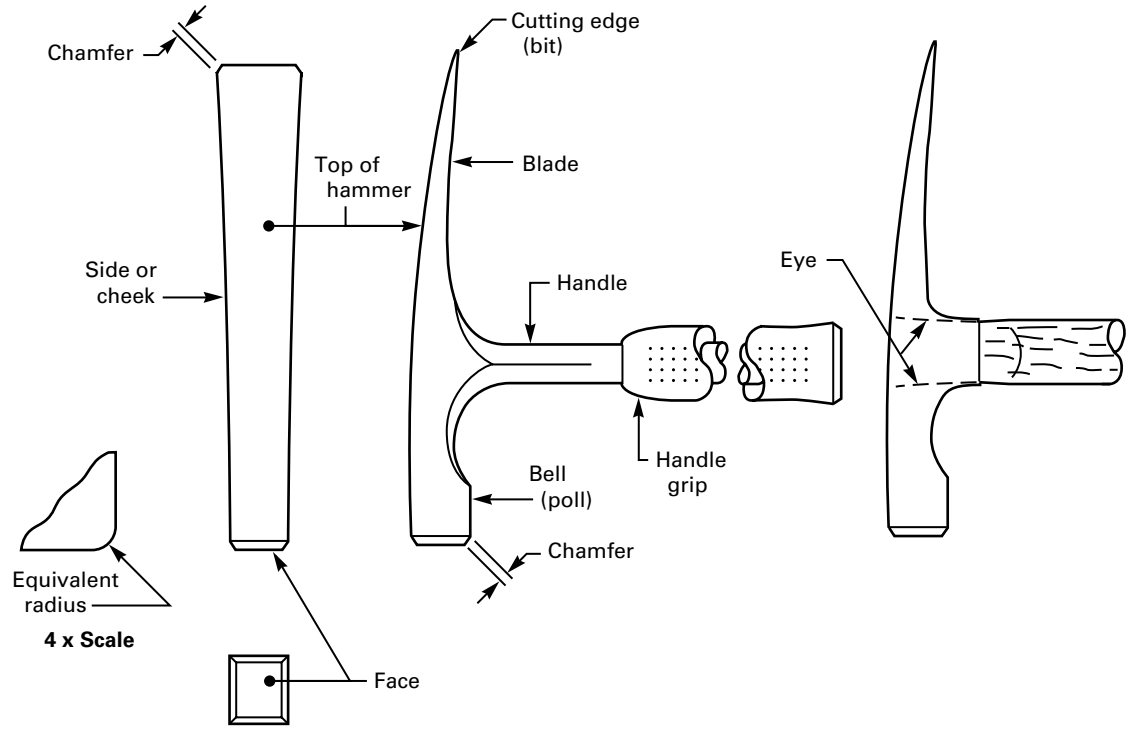

FIG. 1 BRICKLAYER'S HAMMER

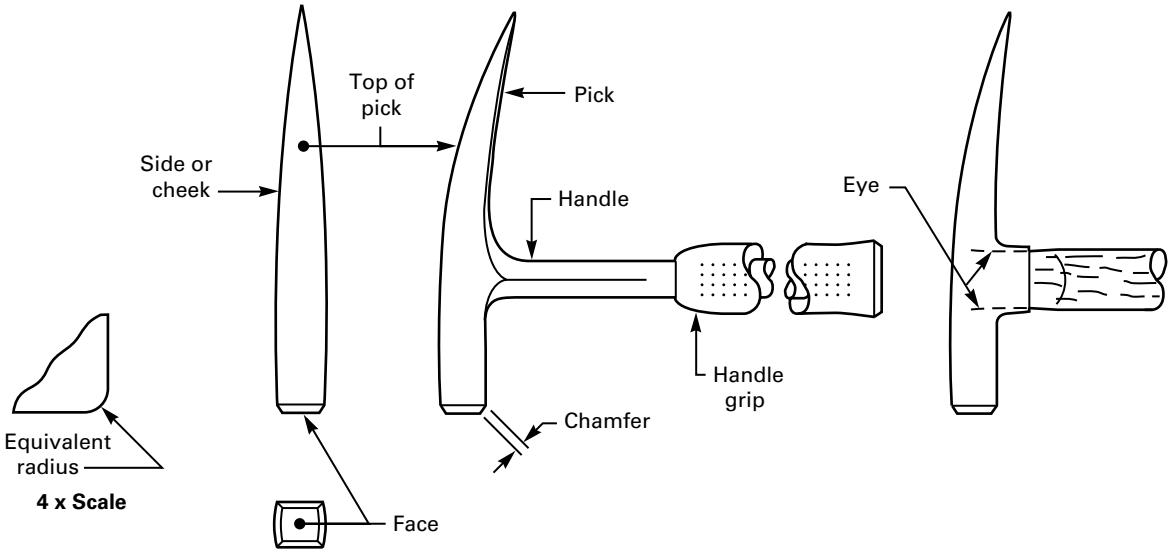

FIG. 2 PROSPECTING PICK

Copyright ASME International
Provided by IHS under license with ASME
No reproduction or networking permitted without license from IHS
Not for Resale

TABLE 1 CHEMICAL PROPERTIES OF STEEL BLADES

	Required Percentage of Element	
Element	Min.	Max.
Carbon	0.45	0.88
Manganese	0.30	1.20
Phosphorus	. . .	0.04
Sulfur	. . .	0.05
Silicon	. . .	0.35

4.3.2 The blade of the bricklayers' hammer and the pick end of the prospecting pick shall be hardened to a hardness of 45 HRC to 60 HRC or equivalent for a minimum length of 0.75 in. (19.1 mm) from the bit end and the pick end, respectively.

4.3.3 The face, blade, and pick end shall not sink, mushroom, chip, crack, or spall when subjected to the striking test specified in para. 4.4.3.

4.3.4 Handles shall not loosen or separate from the head, crack, or break when subjected to the tests specified in paras. 4.4.3 and 4.4.4.

4.4 Tests

Many tests required herein are inherently hazardous and adequate safeguards for personnel and property shall be employed in conducting such tests.

4.4.1 General. Sample bricklayers' hammers and prospecting picks shall be tested and shall conform to the requirements of all applicable tests specified in paras. 4.4.2 through 4.4.4. Separate (new) samples shall be used for each of the tests. Failure to meet the requirements of any of the tests indicates the bricklayer's hammer or prospecting pick is not in compliance with this Standard.

4.4.2 Hardness Determination Test. Hardness determination with respect to faces, blades, and picks shall be made on a mounted or unmounted specimen that has been cut from the tool using the wet abrasive or other equivalent method. Any hardness test will be acceptable that utilizes equipment and methods equivalent to Rockwell hardness determination as specified in ASTM E 18.

4.4.3 Striking and Tensile Force Test. Prior to tensile force testing, sample tools shall be subjected to the following striking test. The tools shall receive 20 full swinging blows by a person of average build, 160 lb to 180 lb (73 kg to 82 kg) or mechanical equivalent, commensurate with the end use and weight of the tool[1] against the smooth, slightly convex surface of a rigidly supported steel object with a minimum diameter of 3.0 in. (76 mm) and a minimum length of 2.0 in. (51 mm), the hardness of which shall be equivalent to a hardness of 92 HRB to 105 HRB or equivalent.

Following the striking test, assemblies consisting of two or more separate parts (head and handle) shall not loosen or separate when subjected to the static tensile forces specified:

(a) 400 lbf (1,780 N) on tools with head weights of less than 20 oz (567 g);

(b) 1,000 lbf (4,448 N) on tools with head weights of 20 oz (567 g) and greater.

4.4.4 Static Force Test. Samples of the assembled tool handles shall not break, loosen, or otherwise fail when subjected to the loads specified in paras. 4.4.4.1 or 4.4.4.2, depending on the head weight, when

(a) the tool head is locked securely in the test fixture with the face down and the handle extended in the horizontal plane;

(b) a static force is applied vertically at a point on the handle measuring 10 in. (254 mm) from the top of the tool head. (See Fig. 3.)

4.4.4.1 Tools with head weights of less than 20 oz (567 g) shall withstand a static force of 80 lbf (356 N).

4.4.4.2 Tools with a head weight of 20 oz (567 g) and greater shall withstand a static force of 100 lbf (445 N).

5 SAFETY REQUIREMENTS AND LIMITATIONS OF USE

(a) To avoid possible eye or other bodily injury, bricklayers' hammers and prospecting picks shall be used only for the purposes specified in para. 1.1 and shall not be used to strike hard or hardened objects such as masonry nails, brick chisels or sets, hatchets, axes, splitting wedges, mauls, other hammers, and other steel tools or be struck by any striking tool or other hardened object.

(b) Safety goggles or equivalent eye protection conforming to ANSI Z87.1 shall be worn by the user and by all persons in the immediate area in which a

[1] The tool face is flat. Thus the struck surface should be convex. Striking flat surface against flat surface should be avoided.

Copyright ASME International
Provided by IHS under license with ASME
No reproduction or networking permitted without license from IHS

Not for Resale

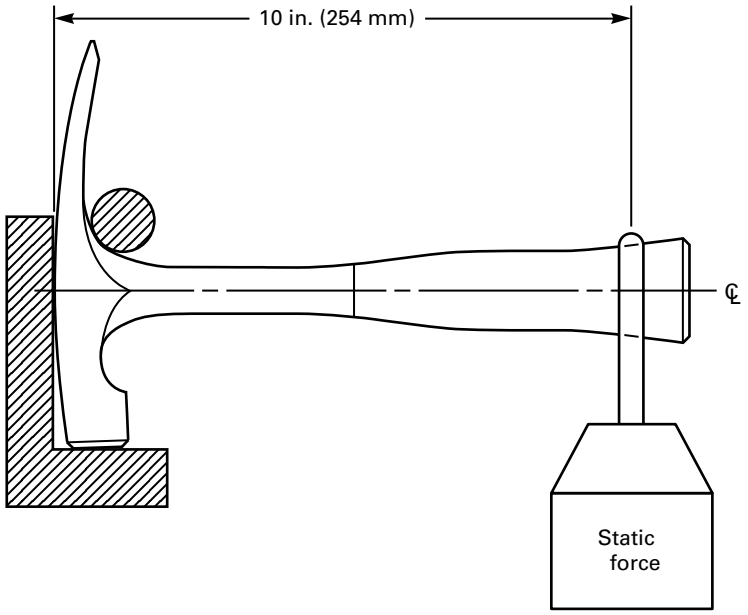

FIG. 3 TYPICAL STATIC FORCE TEST

bricklayers' hammer or prospecting pick or any striking tool is being used to avoid injury from possible flying objects.

(c) Tool heads shall be inspected prior to each use and their use discontinued at the first sign of chipping, mushrooming, or cracking of any portion.

(d) No area, section, or portion of the head of a bricklayer's hammer or prospecting pick shall be ground, welded, treated by reheating, or otherwise altered from the original condition as furnished by the manufacturer except that a dull cutting edge or pick end may be redressed to its original contour using a hand file or whetstone.

(e) Handles shall be inspected prior to each use and damaged handles shall be replaced. Handles shall be free of splinters or cracks and shall be kept tight in the head of the tool. Replacements shall withstand the test requirements specified in paras. 4.4.3 and 4.4.4 and shall be equivalent to the original handle in size and quality.

(f) When provided, handle grips that have loosened from the handle shall be tightened or replaced.

(g) Instructors or employers or both shall stress proper use and safety in the use of bricklayers' hammers and prospecting picks and shall emphasize the necessity to wear and ensure the use of safety goggles or equivalent eye protection. The publication *Guide to Hand Tools — Selection, Safety Tips, Proper Use and Care* provides guidelines for safe use of these tools.

(h) Each bricklayer's hammer or prospecting pick shall be stamped, labeled, or otherwise marked by the manufacturer with the following safety message and symbols or equivalent:



WARNING
WEAR SAFETY GOGGLES
USER AND BYSTANDER

This safety message shall be located in a position that will not interfere with the quality or performance of the tool.

The above safety message shall also appear on all replacement handles.

Pictorials are an accepted equivalent. The principles set forth in ANSI Z535.4 shall be used as the guide for alternative, equivalent methods of labeling.

Copyright ASME International
Provided by IHS under license with ASME
No reproduction or networking permitted without license from IHS Not for Resale

AMERICAN NATIONAL STANDARDS FOR HAND TOOLS

Socket Wrenches, Hand (Inch Series) B107.1-1993
Socket Wrenches, Extensions, Adaptors, and Universal Joints, Power Drive (Impact) (Inch Series) B107.2-1995
Socket Wrenches, Power Drive (Non-Impact) (Inch Series) . . . . . B107.3-1978(R1991)
Driving and Spindle Ends for Portable Hand, Impact, Air, and Electric Tools (Percussion Tools Excluded) B107.4M-1995
Socket Wrenches, Hand (Metric Series) B107.5M-1994
Wrenches, Box, Angled, Open End, Combination, Flare Nut, and Tappet (Inch Series) B107.6-1994
Adjustable Wrenches B107.8M-1996
Wrenches, Box, Angled, Open End, Combination, Flare Nut, and Tappet (Metric Series) B107.9M-1994
Handles and Attachments for Hand Socket Wrenches — Inch and Metric Series B107.10M-1996
Pliers, Diagonal Cutting, and Nippers, End Cutting B107.11M-1993
Nut Drivers (Spin Type, Screwdriver Grip) (Inch Series) B107.12-1997
Pliers — Long Nose, Long Reach B107.13M-1996
Hand Torque Tools B107.14M-1994
Flat Tip and Phillips Screwdrivers B107.15-1993
Shears (Metal Cutting, Hand) B107.16M-1998
Gages, Wrench Openings, Reference B107.17M-1997
Pliers (Wire Twister) B107.18M-1996
Pliers, Retaining Ring B107.19-1993
Pliers (Lineman's, Iron Worker's, Gas, Glass, Fence, and Battery) B107.20M-1998
Wrench, Crowfoot Attachments B107.21-1998
Electronic Cutters B107.22M-1998
Pliers, Multiple Position, Adjustable B107.23M-1997
Pliers — Performance Test Methods B107.25M-1996
Pliers, Multiple Position (Electrical Connector) B107.27-1996
Electronic Torque Instruments B107.28M-1997
Electronic Tester, Hand Torque Tools B107.29M-1997
Screwdrivers, Cross Tip Gaging B107.31M-1997
Socket Wrenches for Spark Plugs B107.34M-1997
Nut Drivers (Spin Type, Screwdriver Grip) (Metric Series) B107.35M-1997
Electronic Pliers B107.38M-1998
Nail Hammers — Safety Requirements B107.41M-1997
Hatchets: Safety Requirements B107.42M-1997
Wood-Splitting Wedges: Safety Requirements B107.43M-1997
Glaziers' Chisels and Wood Chisels: Safety Requirements B107.44M-1998
Ripping Chisels and Flooring/Electricians' Chisels: Safety Requirements B107.45M-1998
Stud, Screw, and Pipe Extractors: Safety Requirements B107.46M-1998
Metal Chisels: Safety Requirements B107.47M-1998
Metal Punches and Drift Pins: Safety Requirements B107.48M-1998
Nail Sets: Safety Requirements B107.49M-1998
Brick Chisels and Brick Sets: Safety Requirements B107.50M-1998
Star Drills: Safety Requirements B107.51-2001
Nail-Puller Bars: Safety Requirements B107.52M-1998
Ball Peen Hammers: Safety Requirements B107.53M-1998
Heavy Striking Tools: Safety Requirements B107.54-2001
Axes: Safety Requirements B107.55M-1998
Body Repair Hammers and Dolly Blocks:Safety Requirements B107.56-1999
Bricklayers' Hammers and Prospecting Picks: Safety Requirements B107.57-2001
Riveting, Scaling, and Tinner's Setting Hammers: Safety Requirements B107.58M-1998

The ASME Publications Catalog shows a complete list of all the Standards published by the Society. For a complimentary catalog, or the latest information about our publications, call 1-800-THE-ASME (1-800-843-2763).

--`,`-`-`,,`,,`,`,,`---

Copyright ASME International
Provided by IHS under license with ASME
No reproduction or networking permitted without license from IHS

Not for Resale

ISBN 0-7918-2668-6



N16001

Copyright ASME International
Provided by IHS under license with ASME
No reproduction or networking permitted without license from IHS

Not for Resale