STD.ASME B107.56-ENGL 1909 ■ 0759670 0614271 05T ■

ASME B107.56-1999

BODY REPAIR HAMMERS AND DOLLY BLOCKS: SAFETY REQUIREMENTS

AN AMERICAN NATIONAL STANDARD



The American Society of Mechanical Engineers

COPYRIGHT American Society of Mechanical Engineers
Licensed by Information Handling Services

STD.ASME B107.56-ENGL 1999 0759670 0614272 T96



The American Society of Mechanical Engineers

AN AMERICAN NATIONAL STANDARD

BODY REPAIR HAMMERS AND DOLLY BLOCKS: SAFETY REQUIREMENTS

ASME B107.56-1999

COPYRIGHT American Society of Mechanical Engineers
Licensed by Information Handling Services

Date of Issuance: December 9, 1999

This Standard will be revised when the Society approves the issuance of a new edition. There will be no addenda or written interpretations of the requirements of this Standard issued to this edition.

ASME is the registered trademark of The American Society of Mechanical Engineers.

This code or standard was developed under procedures accredited as meeting the criteria for American National Standards. The Standards Committee that approved the code or standard was balanced to assure that individuals from competent and concerned interests have had an opportunity to participate. The proposed code or standard was made available for public review and comment that provides an opportunity for additional public input from industry, academia, regulatory agencies, and the public-at-large.

ASME does not "approve," "rate," or "endorse" any item, construction, proprietary device, or activity.

ASME does not take any position with respect to the validity of any patent rights asserted in connection with any items mentioned in this document, and does not undertake to insure anyone utilizing a standard against liability for infringement of any applicable letters patent, nor assume any such liability. Users of a code or standard are expressly advised that determination of the validity of any such patent rights, and the risk of infringement of such rights, is entirely their own responsibility.

Participation by federal agency representative(s) or person(s) affiliated with industry is not to be interpreted as government or industry endorsement of this code or standard.

ASME accepts responsibility for only those interpretations of this document issued in accordance with the established ASME procedures and policies, which precludes the issuance of interpretations by individuals.

No part of this document may be reproduced in any form,
in an electronic retrieval system or otherwise,
without the prior written permission of the publisher.

The American Society of Mechanical Engineers
Three Park Avenue, New York, NY 10016-5990

Copyright © 1999 by
THE AMERICAN SOCIETY OF MECHANICAL ENGINEERS
All Rights Reserved
Printed in U.S.A.

COPYRIGHT American Society of Mechanical Engineers
Licensed by Information Handling Services

FOREWORD

The development of this Standard was initiated by the Striking and Struck Tools Standards Committee, consisting of technical representatives of manufacturer members of the Hand Tools Institute (HTI). This standard was previously designated ANSI/HTI B173.5-1991. The American National Standards Committee B107, Socket Wrenches and Drives, was reorganized as an ASME Standards Committee under the sponsorship of The American Society of Mechanical Engineers. Its title was changed to Hand Tools and Accessories. In 1996, the B173 Committee merged with the B107 Committee and the Committee scope was expanded to include safety considerations.

The purposes of this Standard are to define essential safety considerations specifically applicable to body repair hammers and dolly blocks; to specify test methods to evaluate performance relating to the defined safety considerations; and to indicate limitations of safe use.

A principal change in this edition of the Standard is the accepted use of pictorial safety messages.

This Standard, formerly ANSI/HTI B173.5-1991, was approved as an American National Standard on October 22, 1999.

COPYRIGHT American Society of Mechanical Engineers
Licensed by Information Handling Services

ASME STANDARDS COMMITTEE B107
Hand Tools and Accessories

(The following is the roster of the Committee at the time of approval of this Standard.)

OFFICERS

R. R. McCullough, *Chair*
J. R. Bird, *Secretary*

COMMITTEE PERSONNEL

J. R. Bird, The American Society of Mechanical Engineers
J. D. Davidson, Sears Roebuck and Co.
J. S. Foote, Trade Association Management, Inc.
A. Herskovitz, Consultant
H. Kimball, Naval Air Warfare Center
C. M. Knapp, CASC/LGHB
J. C. Marvil, General Services Administration
J. M. Ster, *Alternate,* Federal Supply Services
G. E. Olson, Gene Olson, Engineering Consultants, Ltd.
W. T. Pagac, Snap-on, Inc.
R. W. Reynolds, Stanley Mechanics Tools, Inc.
W. R. Wacker, BAC Associates, Inc.
R. B. Wright, Wright Tool Co.

SUBCOMMITTEE 4 — SAFETY STANDARDS

J. Combites, Vaughan and Bushnell
J. D. Davidson, Sears Roebuck and Co.
W. T. Pagac, Snap-On, Inc.

Previous page is blank

COPYRIGHT American Society of Mechanical Engineers
Licensed by Information Handling Services

CORRESPONDENCE WITH THE B107 COMMITTEE

General. ASME Standards are developed and maintained with the intent to represent the consensus of concerned interests. As such, users of this Standard may interact with the Committee by requesting interpretations, proposing revisions, and attending Committee meetings. Correspondence should be addressed to:

Secretary, B107 Standards Committee
The American Society of Mechanical Engineers
Three Park Avenue
New York, NY 10016-5990

Proposing Revisions. Revisions are made periodically to the Standard to incorporate changes that appear necessary or desirable, as demonstrated by the experience gained from the application of the Standard. Approved revisions will be published periodically.

The Committee welcomes proposals for revisions to this Standard. Such proposals should be as specific as possible, citing the paragraph number(s), the proposed wording, and a detailed description of the reasons for the proposal, including any pertinent documentation.

Interpretations. Upon request, the B107 Committee will render an interpretation of any requirement of the Standard. Interpretations can only be rendered in response to a written request sent to the Secretary of the B107 Standards Committee.

The request for interpretation should be clear and unambiguous. It is further recommended that the inquirer submit his/her request in the following format:

Subject:	Cite the applicable paragraph number(s) and the topic of the inquiry.
Edition:	Cite the applicable edition of the standard for which the interpretation is being requested.
Question:	Phrase the question as a request for an interpretation of a specific requirement suitable for general understanding and use, not as a request for an approval of a proprietary design or situation. The inquirer may also include any plans or drawings, which are necessary to explain the question; however, they should not contain proprietary names or information.

Requests that are not in this format may be rewritten in the appropriate format by the Committee prior to being answered, which may inadvertently change the intent of the original request.

ASME procedures provide for reconsideration of any interpretation when or if additional information that might affect an interpretation is available. Further, persons aggrieved by an interpretation may appeal to the cognizant ASME Committee or Subcommittee. ASME does not "approve," "certify," "rate," or "endorse" any item, construction, proprietary device, or activity.

Attending Committee Meetings. The B107 Standards Committee regularly holds meetings, which are open to the public. Persons wishing to attend any meeting should contact the Secretary of the B107 Standards Committee.

Previous page is blank

COPYRIGHT American Society of Mechanical Engineers
Licensed by Information Handling Services

CONTENTS

Foreword iii
Standards Committee Roster v
Correspondence With the B107 Committee vii

1 General 1

2 Normative References 1

3 Definitions 1

4 General Requirements 3

5 Safety Requirements and Limitations of Use 9

Figures
1 Nomenclature for Body Repair Hammers 2
2 Nomenclature for Dolly Blocks 4
3 Typical Styles of Body Repair Hammer Striking Ends 5
4 Typical Styles of Dolly Blocks 6
5 Striking Test Setup for Body Repair Hammers 8
6 Typical Static Force Test 8

Previous page is blank

COPYRIGHT American Society of Mechanical Engineers
Licensed by Information Handling Services

BODY REPAIR HAMMERS AND DOLLY BLOCKS: SAFETY REQUIREMENTS

1 GENERAL

1.1 Scope

This Standard provides safety requirements for the design, construction, testing, and use of body repair hammers and dolly blocks, both of which are intended specifically for the reshaping of sheet metal panels.

1.2 Purpose

This Standard is intended to serve as a guide in selecting, testing, and using the hand tools covered. Details of design, testing, and use of the tools covered are specified only as they relate to safety. It is not the purpose of this Standard to specify the details of manufacturing.

This Standard is also meant to serve as a guide in developing manuals and posters for training personnel to work safely.

1.3 Application

This Standard may be used as a guide by state authorities or other regulatory bodies in the formulation of laws or regulations. It is also intended for voluntary use by establishments that use or manufacture the tools covered.

The methods employed to ensure compliance with this Standard shall be determined by the proper regulatory or administrative authority.

1.4 Shall and Should

Mandatory requirements of this Standard are characterized by the word *shall*. If a provision is of an advisory nature, it is indicated by the word *should* or is stated as a recommendation.

1.5 Equivalent

The word *equivalent* in this Standard shall be interpreted to mean alternative designs or features that will provide an equal degree of safety.

2 NORMATIVE REFERENCES

The following documents form a part of this Standard to the extent specified herein. At the time of publication, the editions indicated were valid. All standards are subject to revision and parties to agreement based on this Standard are encouraged to investigate the possibility of applying the most recent edition of the standards indicated below.

ANSI Z87.1-1989, Practice for Occupational and Educational Eye and Face Protection; Supplement ANSI Z87.1a-1991

ANSI Z535.4-1998, Product Safety Signs and Labels

Publisher: American National Standards Institute (ANSI), 11 West 42nd Street, New York, NY 10036

ASTM A29/A 29M-93a, Standard Specification for Steel Bars, Carbon and Alloy, Hot-Wrought and Cold-Finished, General Requirements for

ASTM A322-91, Standard Specification for Steel Bars, Alloy, Standard Grades

ASTM A576-90b (R1995), Standard Specification for Steel Bars, Carbon, Hot-Wrought, Special Quality

ASTM A681-94, Standard Specification for Tool Steels Alloy

ASTM E18-94, Standard Test Methods for Rockwell Hardness and Rockwell Superficial Hardness of Metallic Materials

Publisher: American Society for Testing and Materials (ASTM), 100 Barr Harbor Drive, West Conshohocken, PA 19428-2959

Guide to Hand Tools — Selection, Safety Tips, Proper Use and Care

Publisher: Hand Tools Institute (HTI), 25 North Broadway, Tarrytown, NY 10591

COPYRIGHT American Society of Mechanical Engineers
Licensed by Information Handling Services

3 DEFINITIONS

3.1 Body Repair Hammers (see Fig. 1 as applicable)

bell: that portion of the hammerhead located between the neck and the striking face.

bumping, dinging, finishing face: the area of the hammer used to restore the damaged sheet metal panel to its original shape by striking.

chamfer: the bevel or equivalent radius encircling the perimeter of the striking and struck faces and at the end of cross peens.

cheek: the outside surface of the hammerhead, on either side of the eye, located between the two necks.

eye: an opening or aperture in the hammerhead into which the handle is inserted, if the handle is separate.

handle: the portion that protrudes from the hammerhead and by which the hammer is held.

neck: the portion of the hammerhead located either between the bell and the eye or the peen and the eye, or both.

peen: the striking surface of the hammerhead located in front of the neck. The peen may have one of the following shapes:

(a) wedge-shaped (as in a cross peen or cross chisel);

(b) cylindrical (as in a cylindrical cross peen);

(c) rounded (as in a ball peen).

pick: the elongated tapered portion of the hammerhead extending from the eye to the point.

point: the striking surface located at the end of the pick.

safety message: the information imprinted on or affixed to the hammer that is intended to promote safety.

shrinking face: the striking surface that is normally serrated. It may be flat or crowned.

striking face: the portion of the hammerhead located in front of the bell and chamfer that contacts the sheet metal during use.

striking face crown: the convex shape or radius of the striking face.

striking surface: the surface of a hammerhead, peen, or pick intended to contact the sheet metal during use.

struck face: the portion of the hammerhead, exclusive of the chamfer, that is intended to be struck with a striking tool during use.

3.2 Dolly Blocks (see Fig. 2 as applicable)

beading edge: an edge of a dolly block with a rounded apex that is used to raise a bead.

crown: a broad area of the working surface that is convex in shape.

flanging edge: an edge of a dolly block with an approximately right-angle rounded surface that is used to form a flange.

safety message: the information imprinted on or affixed to the hammer that is intended to promote safety [see para. 5(k)].

working surface: the portion of the dolly identified by its smooth and polished nature.

4 GENERAL REQUIREMENTS

4.1 Design of Body Repair Hammers

Body repair hammers are designed for striking against sheet metal panels. They shall consist of a hammerhead with one or more striking surfaces and a handle, or one striking surface and one struck face and a handle, as in a fender bumper.

4.1.1 The hammerhead striking surfaces may consist of, but are not limited to, any combination of the following styles as shown in Fig. 3:

(a) Bumping, Dinging, Finishing Face. Has a smooth, flat, or crowned striking face. The cross-section of the bell may be round or polygonal.

(b) Picking, Pecking End. Has a pointed or rounded tip called a point at the end of a round or polygonal pick. The axis of the pick may be straight or curved.

(c) Shrinking Face. Has a serrated striking face, which may be flat or crowned. The cross-section at the bell may be round or polygonal.

(d) Ball Peen End. Has a smoothly contoured shape that is approximately hemispherical.

(e) Cross Peen, Cross Chisel End. Has a wedge or chisel-shaped peen oriented at right angles to the axis of the handle.

(f) Cylindrical Cross Peen End. Has a generally cylindrical-shaped striking part whose axis is oriented approximately at a right angle to the axis of the hammerhead and handle.

COPYRIGHT American Society of Mechanical Engineers
Licensed by Information Handling Services

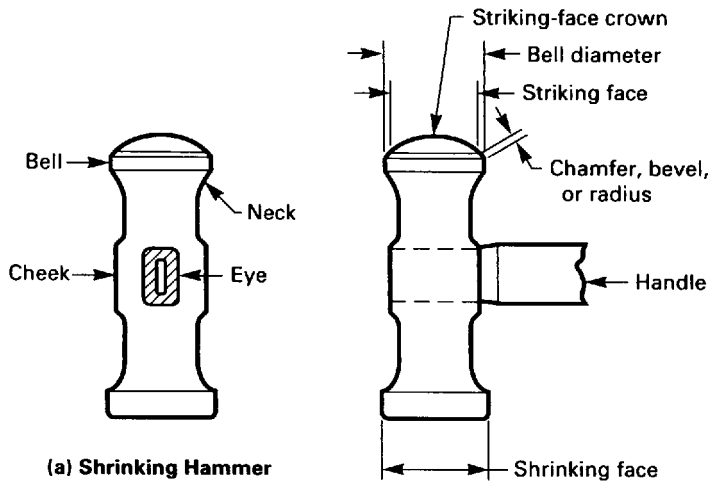

(a) Shrinking Hammer

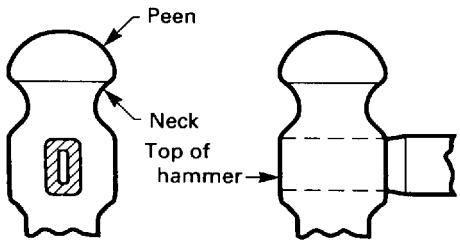

(b) Ball Peen Hammer

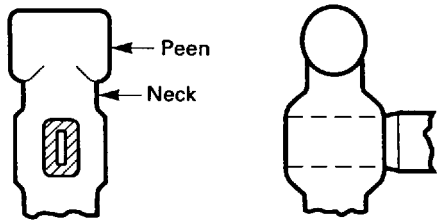

(c) Cylindrical Cross Peen Hammer

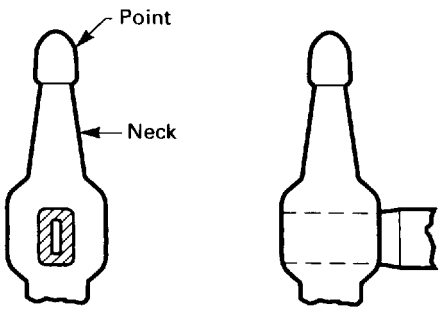

(d) Picking, Pecking Peen Hammer

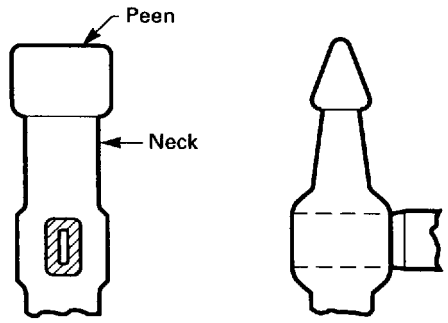

(e) Cross-Chisel Cross Peen Hammer

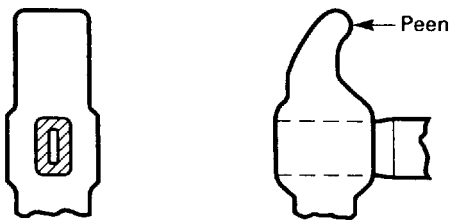

(f) Curved-End Hammer

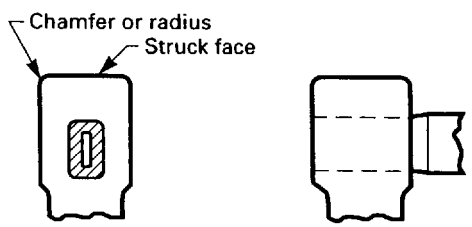

(g) Fender Bumper Hammer

FIG. 1 NOMENCLATURE FOR BODY REPAIR HAMMERS

COPYRIGHT American Society of Mechanical Engineers
Licensed by Information Handling Services

4.1.2 The fender bumper has a striking surface and a struck face. See Fig. 3(e).

4.1.3 The chamfer on the bumping, dinging, finishing, and other striking faces shall be a minimum of 0.010 in. (0.25 mm).

4.1.4 Handles shall be of any design including ergonomic, that will withstand the appropriate tests specified in paras. 4.5.3 and 4.5.4.

4.1.5 The head and handle shall be free of nonfunctional sharp edges, points, and surface roughness that can inflict personal injury when handling the hammer.

4.2 Design of Dolly Blocks

Dolly blocks are designed for straightening, bumping, shrinking, and finishing sheet metal panels. They are intended for use with or without body repair hammers, but shall not be struck directly with a hammer.

4.2.1 Various typical styles of dolly blocks and their functions are listed here (see Fig. 4). The names given are those generally recognized in the body repair industry. The styles covered by the Standard are not limited to those named or illustrated.

(a) General Purpose, Crowned. For use on crowned panels and flat portions of body panels.

(b) General Purpose, Anvil. For various curves and contours of body, door panels, and deep skirted fenders.

(c) General Purpose, Rail. For bumping, dinging, straightening, and finishing various portions of body door panels and fenders. A general purpose rail dolly block has two beading and flanging edges.

(d) Bead. The working surfaces are suitable for use on long curved fenders, beads and flanges.

(e) Heel. The working surfaces are suitable for use on sharp corners and large radius portions of panels.

(f) Toe. Has a flat face and flat edge for use in dinging flat surfaces. The crowned and curved contours are suitable for use on odd crowns and contours.

(g) Wedge. The shape is suitable for use behind brackets, braces, and reinforcements.

(h) Shrinking. Has a low crown suitable for shrinking metal, raising beads, and molding.

(i) Angle. For use on various angles, crosses and curves.

(j) Spoon. Has an integral handle to allow forming in deep pockets of doors and panels.

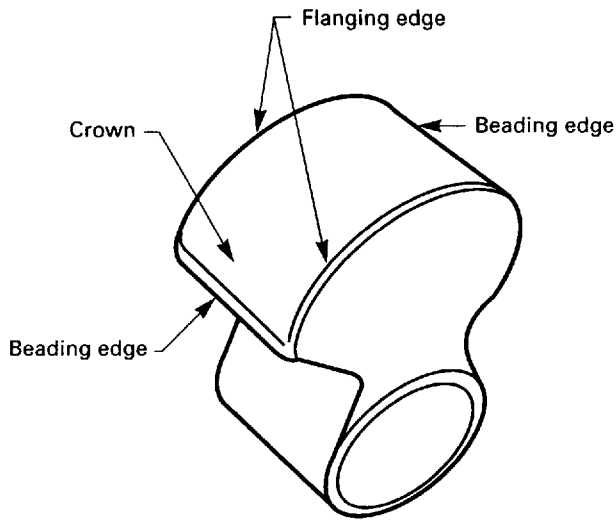

FIG. 2 NOMENCLATURE FOR DOLLY BLOCKS

4.2.2 All dolly block surfaces shall be free of nonfunctional sharp edges, points, and surface roughness that could inflict personal injury when handling the dolly block.

4.3 Materials

4.3.1 Body Repair Hammers

4.3.1.1 Body repair hammerheads shall be made from special-quality, fine-grain, hot-rolled steel bars conforming to the chemical requirements specified in ASTM A 576. Equivalent material, such as alloy steel in conformance with ASTM A322 or ASTM A681, may also be used.

4.3.1.2 Body repair hammerheads shall be free of manufacturing and material defects such as seams, laps, pipes, and cold shuts that would jeopardize sound construction. They shall conform to the requirements for mechanical properties specified in para. 4.4.1 and shall withstand the striking test specified in para. 4.5.3.

4.3.1.3 Handles shall be made of any suitable material that will withstand the test requirements in paras. 4.5.3 and 4.5.4.

4.3.2 Dolly Blocks

4.3.2.1 Dolly blocks shall be made from special-quality, fine-grained, hot-rolled carbon steel or alloy steel having good wear-resisting and shock-resisting qualities. Equivalent materials conforming to either ASTM A29/A29M, ASTM A322, or ASTM A576 may also be used.

COPYRIGHT American Society of Mechanical Engineers
Licensed by Information Handling Services

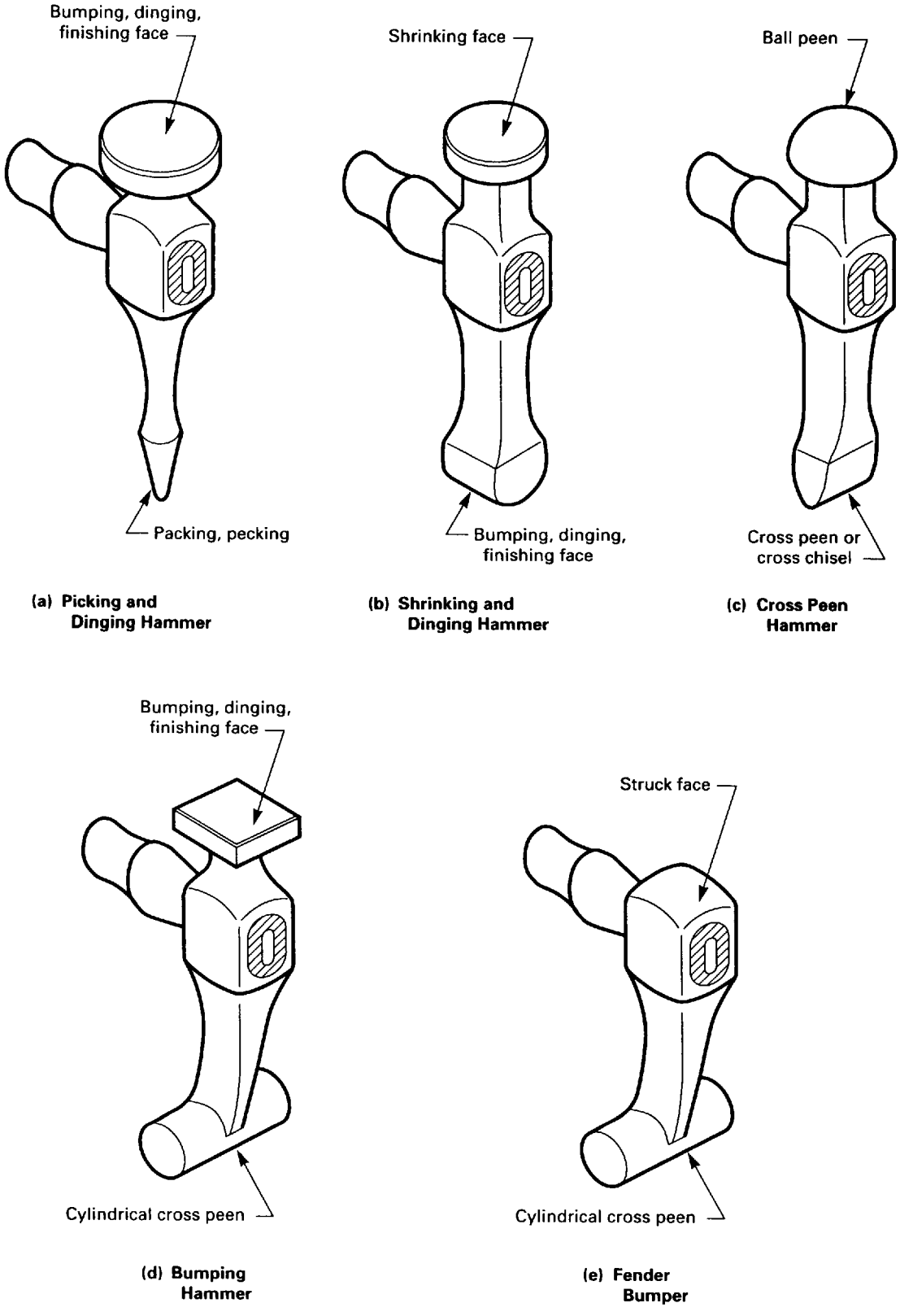

(a) Picking and Dinging Hammer

(b) Shrinking and Dinging Hammer

(c) Cross Peen Hammer

(d) Bumping Hammer

(e) Fender Bumper

FIG. 3 TYPICAL STYLES OF BODY REPAIR HAMMER STRIKING ENDS

COPYRIGHT American Society of Mechanical Engineers
Licensed by Information Handling Services

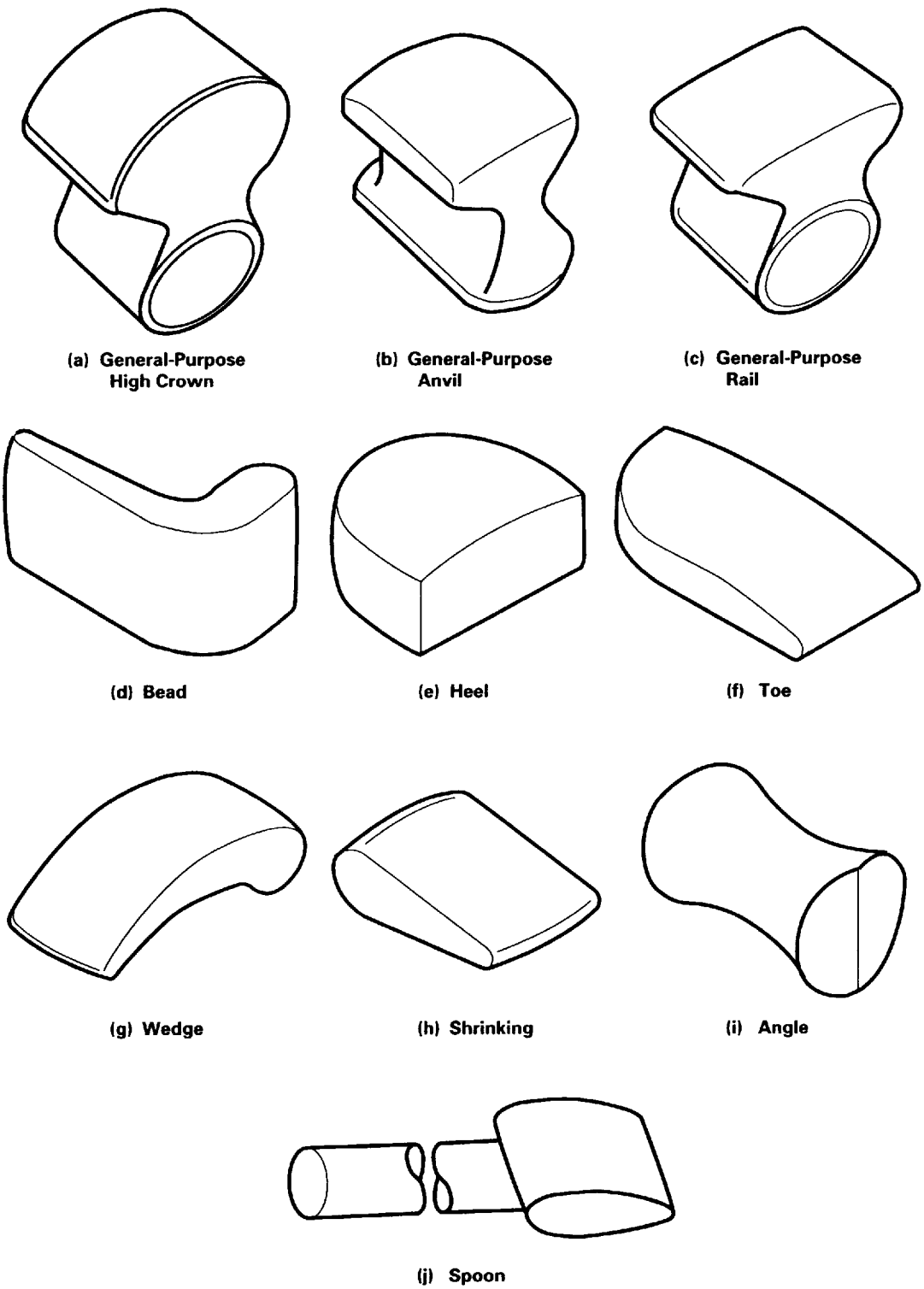

(a) General-Purpose High Crown

(b) General-Purpose Anvil

(c) General-Purpose Rail

(d) Bead

(e) Heel

(f) Toe

(g) Wedge

(h) Shrinking

(i) Angle

(j) Spoon

FIG. 4 TYPICAL STYLES OF DOLLY BLOCKS

COPYRIGHT American Society of Mechanical Engineers
Licensed by Information Handling Services

4.3.2.2 Dolly blocks shall be free of manufacturing and material defects, such as seams, laps, and cold shuts that would jeopardize sound construction. They shall conform to the requirements for mechanical properties specified in para. 4.4.3.

4.4 Mechanical Properties

4.4.1 Body Repair Hammers. The striking faces and peen ends of body repair hammerheads shall be hardened and tempered to 45HRC to 60HRC or equivalent. The struck face of fender bumper body repair hammerheads shall not exceed 45HRC or equivalent. The striking faces of body repair hammerheads shall not sink, mushroom, chip, crack, or spall when subjected to the tests specified in para. 4.5.3.[1]

4.4.2 Handles shall not loosen or separate from hammerhead, crack, or break when subjected to the tests specified in paras 4.5.3 and 4.5.4.

4.4.3 Dolly Blocks. The hardness of dolly blocks shall not exceed 52HRC or equivalent.

4.5 Tests

Many tests required herein are inherently hazardous and adequate safeguards for personnel and property shall be employed in conducting such tests.

4.5.1 General. Sample body repair hammers shall be tested and shall conform to the applicable requirements of the tests specified in paras. 4.5.2 through 4.5.4. For complete hammers to meet the requirements of this Standard, all three tests shall be performed. Separate (new) samples shall be used for each of the tests. Sample dolly blocks shall be tested to the requirements of the test specified in para. 4.5.2. Failure to meet the requirements of any one of the tests indicates the hammers are not in compliance with this Standard.

4.5.2 Hardness Determination Test. Hardness determination with respect to dolly blocks and striking faces, peens, and struck faces of body repair hammerheads, shall meet the requirements in ASTM E18.

[1] The striking test is so severe that a degree of permissible deformation of serrations on the striking face of hammers can be anticipated.

4.5.3 Striking and Tensile Force Test. Prior to tensile force testing, sample body repair hammers shall be subjected to a preconditioning striking test as specified in paras. 4.5.3.1, 4.5.3.2, and 4.5.3.3, using the following test setup:

(a) A rigidly supported steel bar with a min. diameter of 6 in. (152 mm) and a min. height of 3 in. (76 mm) and having a hardness of 92 HRB to 105 HRB or equivalent, shall be used to support a 26-gage 0.0179 in. (0.455 mm) steel sheet metal panel that fully covers the steel bar (see Fig. 5).

(b) Following the preconditioning striking test, the hammerhead shall not loosen or separate from the handle when subjected to a static tensile force of 400 lbf (1780 N).

4.5.3.1 Dinging, finishing, bumping, and ball peen hammer ends shall withstand twenty swinging blows by continuous hand striking through a 90-deg arc, by a person of average build, 160 lb to 180 lb (73 kg to 82 kg) or the mechanical equivalent, without the striking face or ball peen chipping, cracking, spalling, or mushrooming. The hammer handle shall not splinter, break, loosen or separate.

4.5.3.2 Pecking, cylindrical cross peen, cross peen, cross chisel, and shrinking hammer ends shall withstand twenty swinging blows by continuous hand striking through a 45-deg arc by a person of average build, 160 lb to 180 lb (73 kg to 82 kg) or the mechanical equivalent, without the point, peen, or chisel ends chipping, cracking, spalling, or mushrooming. The hammer handle shall not splinter, break, loosen or separate.

4.5.3.3 Fender bumper body repair hammers shall be subjected to the preconditioning striking test that uses the same test setup as shown in Fig. 5.

The cylindrical cross peen shall be held against the sheet metal with the handle extending horizontally. The striking face of a 16 oz (454 g) ball peen hammer shall be used to subject the struck face to twenty swinging blows by continuous hand striking through a 90-degree arc by a person of average build, 160 lb to 180 lb (73 kg to 82 kg), or the mechanical equivalent. The fender bumper hammerhead shall not chip, crack, spall, or mushroom.

4.5.4 Static Force Test. Samples of the assembled body repair handles shall not break, loosen, or otherwise fail when subjected to a static force (see Fig. 6) of 25 lbf (111 N) while:

(a) The hammerhead is locked securely in the test fixture with the striking face down and the handle extended in a horizontal plane.

COPYRIGHT American Society of Mechanical Engineers
Licensed by Information Handling Services

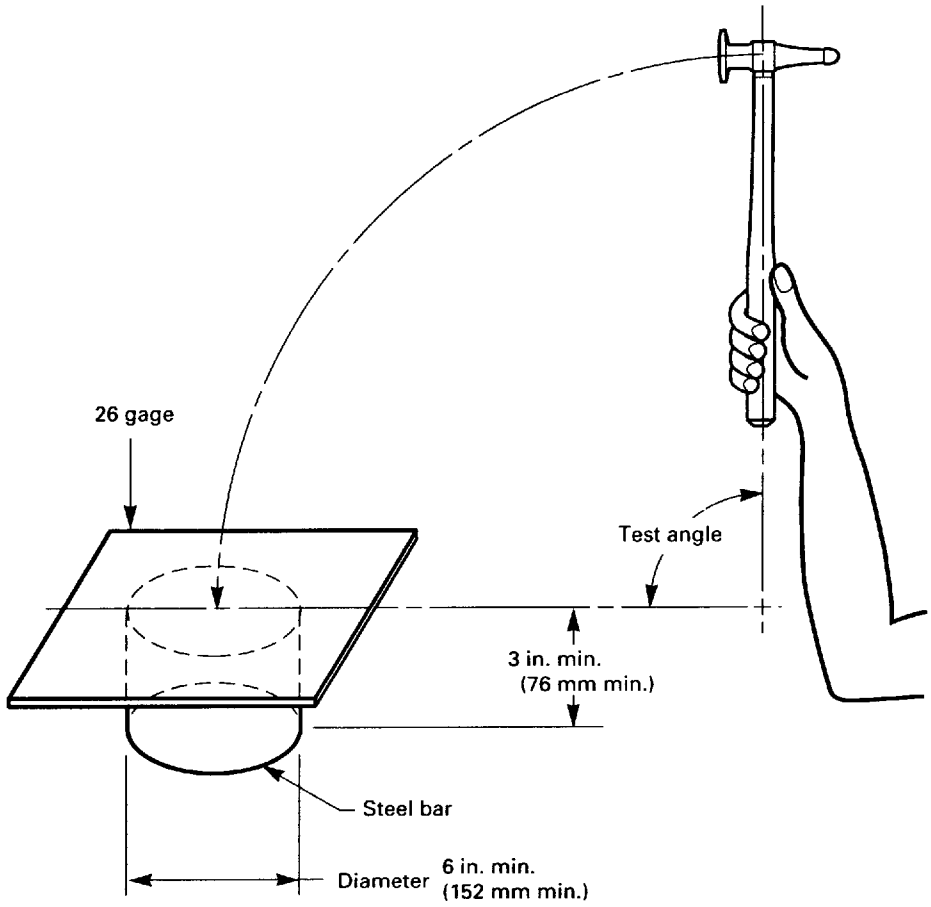

FIG. 5 STRIKING TEST SETUP FOR BODY REPAIR HAMMERS

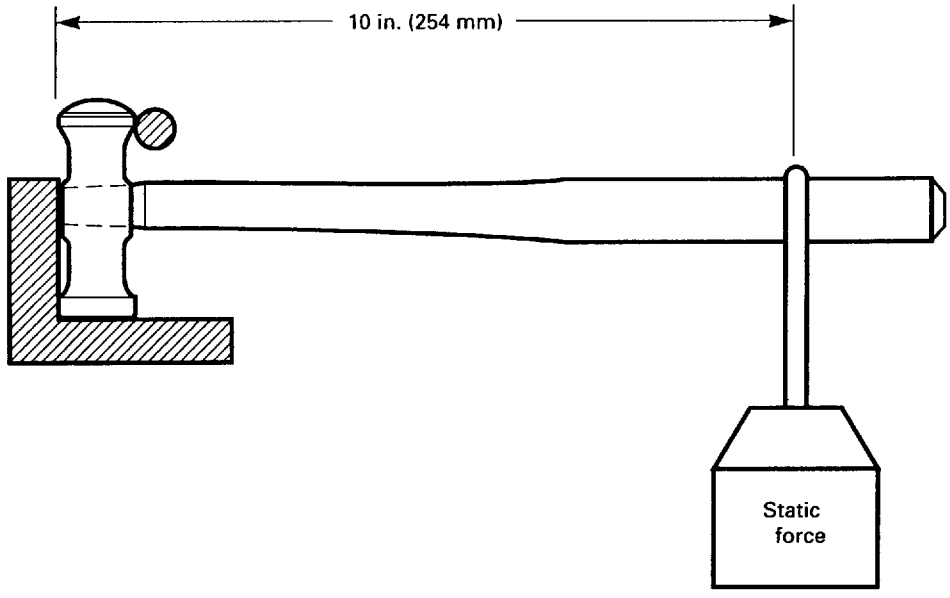

FIG. 6 TYPICAL STATIC FORCE TEST

COPYRIGHT American Society of Mechanical Engineers
Licensed by Information Handling Services

(b) A static force of 25 lbf (111 N) is applied vertically at a point on the handle measuring 10 in. (254 mm) from the top of the hammer.

5 SAFETY REQUIREMENTS AND LIMITATIONS OF USE

(a) Body repair hammers and dolly blocks are special-purpose tools designed and intended only for use in straightening, shaping, shrinking, picking, and finishing damaged sheet metal panels normally found on bodies and fenders of motor vehicles. They are intended to be used separately or together for these repair procedures.

(b) Dolly blocks shall not be struck directly by any type of hammer or other striking tool.

(c) To avoid possible eye or other bodily injury, body repair hammers and dolly blocks shall not be used to strike objects other than sheet metal panels.

(d) The cheeks or necks of body repair hammers shall not be used for striking or pounding.

(e) To avoid possible injury from flying objects, safety goggles or equivalent eye protection conforming to ANSI Z87.1 shall be worn by the user and by all persons in the immediate area in which any striking tool is being used.

(f) Body repair hammerheads shall be inspected prior to each use and discontinued at the first sign of chipping, mushrooming, or cracking of any portion.

(g) Handles shall be inspected prior to each use and those damaged shall be replaced. Handles shall be free of splinters or cracks and shall be kept tight in the tool. Replacements shall withstand the test requirements specified in paras. 4.5.3 and 4.5.4 and shall be equivalent to the original handle in size and quality.

(h) No area, section or portion of the body repair hammerhead or dolly block shall be ground, welded, treated by reheating, or otherwise altered from the original condition as furnished by the manufacturer, except for dolly blocks as indicated in para 5(i).

(i) Dolly blocks shall be inspected prior to each use and discontinued at the first sign of chipping or cracking. Any mushrooming of the working surface of the dolly block from tool usage shall be promptly redressed to the original contour by the use of a whetstone or file.[2]

(j) Instructors and employers shall stress proper use and safety in the use of body repair hammers and dolly blocks and shall emphasize the necessity to wear and ensure the use of safety goggles or equivalent eye protection. The publication *Guide to Hand Tools — Selection, Safety Tips, Proper Use and Care* provides guidelines for the safe use of these tools.

(k) Each body repair hammer shall be stamped, labeled, or otherwise marked with the following safety message or equivalent:



WARNING
WEAR SAFETY GOGGLES
USER AND BYSTANDER

Strike squarely — avoid glancing at blows. This tool can be made to chip if struck against another tool or hard object, possibly resulting in eye or other bodily injury.

Each dolly block shall be stamped, labeled, or otherwise marked with the following safety message or equivalent. This safety message shall also appear on all replacement handles of body repair hammers and dolly blocks.



WARNING
WEAR SAFETY GOGGLES
USER AND BYSTANDER

Both of the above safety messages shall be located in a position that will not interfere with the quality or performance of the tools.

The principles set forth in ANSI Z535.4 shall be used as the guide for alternative, equivalent methods of labeling.

---

[2] It is understood that industrial users with adequate facilities and properly trained personnel may choose to redress or resharpen these tools by other means without altering the metallurgical characteristics of the tools.

COPYRIGHT American Society of Mechanical Engineers
Licensed by Information Handling Services

STD.ASME B107.56-ENGL 1909 ■ 0759670 0614287 417 ■

ISBN 0-7918-2620-1





N15899

COPYRIGHT American Society of Mechanical Engineers
Licensed by Information Handling Services