ASME B107.54-2001

HEAVY STRIKING TOOLS: SAFETY REQUIREMENTS

AN AMERICAN NATIONAL STANDARD

The American Society of Mechanical Engineers

Copyright ASME International
Provided by IHS under license with ASME
No reproduction or networking permitted without license from IHS

Not for Resale



The American Society of Mechanical Engineers

AN AMERICAN NATIONAL STANDARD

HEAVY STRIKING TOOLS: SAFETY REQUIREMENTS

ASME B107.54-2001

Copyright ASME International
Provided by IHS under license with ASME
No reproduction or networking permitted without license from IHS

Not for Resale

Date of Issuance: August 31, 2001

This Standard will be revised when the Society approves the issuance of a new edition. There will be no addenda issued to this edition.

ASME will issue written replies to inquiries concerning interpretation of technical aspects of this Standard.

ASME is the registered trademark of The American Society of Mechanical Engineers.

This code or standard was developed under procedures accredited as meeting the criteria for American National Standards. The Standards Committee that approved the code or standard was balanced to assure that individuals from competent and concerned interests have had an opportunity to participate. The proposed code or standard was made available for public review and comment that provides an opportunity for additional public input from industry, academia, regulatory agencies, and the public-at-large.

ASME does not "approve," "rate," or "endorse" any item, construction, proprietary device, or activity.

ASME does not take any position with respect to the validity of any patent rights asserted in connection with any items mentioned in this document, and does not undertake to insure anyone utilizing a standard against liability for infringement of any applicable letters patent, nor assume any such liability. Users of a code or standard are expressly advised that determination of the validity of any such patent rights, and the risk of infringement of such rights, is entirely their own responsibility.

Participation by federal agency representative(s) or person(s) affiliated with industry is not to be interpreted as government or industry endorsement of this code or standard.

ASME accepts responsibility for only those interpretations of this document issued in accordance with the established ASME procedures and policies, which precludes the issuance of interpretations by individuals.

No part of this document may be reproduced in any form,
in an electronic retrieval system or otherwise,
without the prior written permission of the publisher.

The American Society of Mechanical Engineers
Three Park Avenue, New York, NY 10016-5990

Copyright © 2001 by
THE AMERICAN SOCIETY OF MECHANICAL ENGINEERS
All Rights Reserved
Printed in U.S.A.

Copyright ASME International
Provided by IHS under license with ASME
No reproduction or networking permitted without license from IHS

Not for Resale

FOREWORD

The development of this Standard was initiated by the Striking and Struck Tools Standards Committee, consisting of technical representatives of Manufacturer members of the Hand Tools Institute (HTI). This Standard was previously numbered ANSI/HTI B173.6-1991. The American National Standards Committee B107, Socket Wrenches and Drives, under sponsorship of The American Society of Mechanical Engineers, was reoganized as an ASME Standards Committee and its title was changed to Hand Tools and Accessories. In 1996, the B173 Committee merged with the B107 Committee and the B107 Committee scope was expanded to include safety considerations.

The purposes of this Standard are to define essential safety considerations specifically applicable to bricklayers' hammers and prospecting picks, to specify test methods to evaluate performance relating to the demand safety considerations, and to indicate limitations of safe use.

A principal change in this edition of the Standard is the accepted use of pictorial safety messages.

The format of this Standard is in accordance with "A Guide to Writing ASME Codes and Standards." Requests for interpretations of the technical requirements of this Standard should be expressed in writing to the Secretary, B107 Committee, at the address below.

Suggestions for the improvement of this Standard are welcome. They should be addressed to the Secretary, ASME B107 Committee, Three Park Avenue, New York, NY 10016-5990.

The requirements of this Standard become effective at the time of publication.

This revision was approved as an American National Standard on January 3, 2001.

Copyright ASME International
Provided by IHS under license with ASME
No reproduction or networking permitted without license from IHS
Not for Resale

ASME STANDARDS COMMITTEE B107
Hand Tools and Accessories

(The following is the roster of the Committee at the time of approval of this Standard.)

OFFICERS

R. R. McCullough, *Chair*
R. B. Wright, *Vice Chair*
J. R. Bird, *Secretary*

COMMITTEE PERSONNEL

J. R. Bird, The American Society of Mechanical Engineers
R. M. Byrne, Trade Association Management, Inc.
J. S. Foote, *Alternate,* Trade Association Management, Inc.
J. D. Davidson, Sears Roebuck and Co.
A. Herskovitz, U.S. Army ARDEC
H. Kimball, Naval Air Warfare Center
C. M. Knapp, CASC/LGHB
J. C. Marvil, General Services Administration
J. M. Ster, *Alternate,* General Services Administration
G. E. Olson, Gene Olson Engineering Consultant, Ltd.
W. T. Pagac, Snap-On, Inc.
R. W. Reynolds, Stanley Mechanics Tools, Inc.
W. R. Wacker, BAC Associates, Inc.
R. B. Wright, Wright Tool Co.

SUBCOMMITTEE 4 — SAFETY STANDARDS

G. E. Olson, *Chair,* Gene Olson Engineering Consultant, Ltd.
J. Combites, Vaughan and Bushnell
J. D. Davidson, Sears Roebuck and Co.
W. T. Pagac, Snap-On, Inc.

--`,,`-`-`,,`,,`,`,,`---

Copyright ASME International
Provided by IHS under license with ASME
No reproduction or networking permitted without license from IHS
Not for Resale

CORRESPONDENCE WITH THE B107 COMMITTEE

General. ASME Standards are developed and maintained with the intent to represent the consensus of concerned interests. As such, users of this Standard may interact with the Committee by requesting interpretations, proposing revisions, and attending Committee meetings. Correspondence should be addressed to:

Secretary, B107 Standards Committee
The American Society of Mechanical Engineers
Three Park Avenue
New York, NY 10016-5990

Proposing Revisions. Revisions are made periodically to the Standard to incorporate changes that appear necessary or desirable, as demonstrated by the experience gained from the application of the Standard. Approved revisions will be published periodically.

The Committee welcomes proposals for revisions to this Standard. Such proposals should be as specific as possible, citing the paragraph number(s), the proposed wording, and a detailed description of the reasons for the proposal, including any pertinent documentation.

Interpretations. Upon request, the B107 Committee will render an interpretation of any requirement of the Standard. Interpretations can only be rendered in response to a written request sent to the Secretary of the B107 Standards Committee.

The request for interpretation should be clear and unambiguous. It is further recommended that the inquirer submit his/her request in the following format:

Subject: Cite the applicable paragraph number(s) and the topic of the inquiry.

Edition: Cite the applicable edition of the Standard for which the interpretation is being requested.

Question: Phrase the question as a request for an interpretation of a specific requirement suitable for general understanding and use, not as a request for an approval of a proprietary design or situation. The inquirer may also include any plans or drawings, which are necessary to explain the question; however, they should not contain proprietary names or information.

Requests that are not in this format may be rewritten in the appropriate format by the Committee prior to being answered, which may inadvertently change the intent of the original request.

ASME procedures provide for reconsideration of any interpretation when or if additional information that might affect an interpretation is available. Further, persons aggrieved by an interpretation may appeal to the cognizant ASME Committee or Subcommittee. ASME does not “approve,” “certify,” “rate,” or “endorse” any item, construction, proprietary device, or activity.

Attending Committee Meetings. The B107 Standards Committee regularly holds meetings, which are open to the public. Persons wishing to attend any meeting should contact the Secretary of the B107 Standards Committee.

Copyright ASME International
Provided by IHS under license with ASME
No reproduction or networking permitted without license from IHS
Not for Resale

CONTENTS

Foreword iii
Committee Roster iv
Correspondence With the B107 Committee v

1 General 1

2 Normative References 1

3 Definitions 4

4 General Requirements 4

5 Safety Requirements and Limitations of Use 6

Figures
1 Nomenclature for Heavy Striking Tools 2
2 Chamfer / Equivalent Radius 4
3 Typical Static Force Test 6

Table
1 Chemical Properties of Heavy Striking Tool Heads 5

Copyright ASME International
Provided by IHS under license with ASME
No reproduction or networking permitted without license from IHS
Not for Resale

HEAVY STRIKING TOOLS: SAFETY REQUIREMENTS

1 GENERAL

1.1 Scope

This Standard provides safety requirements for the design, construction, testing, and use of the following styles of heavy striking tools. The names given and intended uses are those generally recognized (see Fig. 1).

(a) Blacksmith's Double-Face Sledges. Nevada long-pattern striking hammers, and Oregon short-pattern striking hammers, intended specifically for use in general sledging operations in striking wood, metal, masonry, and stone.

(b) Hand Drilling Hammers. Intended specifically for use in striking chisels, punches, star drills, spikes, and hardened nails.

(c) Blacksmith's Cross-Peen Sledges. The striking face of which is intended specifically for use in general sledging operations in striking wood, metal, masonry, and stone and the peen face of which is intended specifically for use in bending and fullering (necking) unhardened metal.

(d) Woodchopper's Maul. The bit end of which is intended specifically for splitting logs and the striking face of which is intended specifically for driving metal wood-splitting wedges into logs.

(e) Railroad Spike Maul. Intended specifically for use in driving railroad spikes.

(f) Spalling Hammers. Intended specifically for use in cutting and shaping stone and masonry by first making a score line with the peen and then tapping away the unwanted stone or masonry with the striking face.

(g) Stone Sledge. The peen end of which is intended specifically for making score lines in stone and masonry and the striking face of which is intended specifically for use in breaking up stone and masonry.

(h) Bush Hammers. Intended specifically for use in roughing and chipping concrete.

(i) Boat Mauls. Intended specifically for use in driving wooden wedges and wooden pegs.

(j) Lineman's or Farrier's Turning Hammers. Intended specifically for use by telephone and electric utility linemen or by farriers (blacksmiths) in forming and shaping horseshoes.

1.2 Purpose

This Standard is intended to serve as a guide in selecting, testing, and using the hand tools covered. Details of design, testing, and use of the tools covered are specified only as they relate to safety. It is not the purpose of this Standard to specify the details of manufacturing.

This Standard is also meant to serve as a guide in developing manuals and posters and for training personnel to work safely.

1.3 Application

This Standard may be used as a guide by state authorities or other regulatory bodies in the formulation of laws or regulations. It is also intended for voluntary use by establishments that use or manufacture the tools covered.

The methods employed to ensure compliance with this Standard shall be determined by the proper regulatory or administrative authority.

1.4 Shall and Should

Mandatory requirements of this Standard are characterized by the word *shall*. If a provision is of an advisory nature, it is indicated by the word *should* or is stated as a recommendation.

1.5 Equivalent

The word *equivalent* in this Standard shall be interpreted to mean alternative designs or features that will provide an equal degree of safety.

2 NORMATIVE REFERENCES

The following documents form a part of this Standard to the extent specified herein. At the time of publication, the editions indicated were valid. All standards are subject to revision, and parties to agreements based on this Standard are encouraged to investigate the possibility of applying the most recent editions of the standards indicated below.

Copyright ASME International
Provided by IHS under license with ASME
No reproduction or networking permitted without license from IHS
Not for Resale

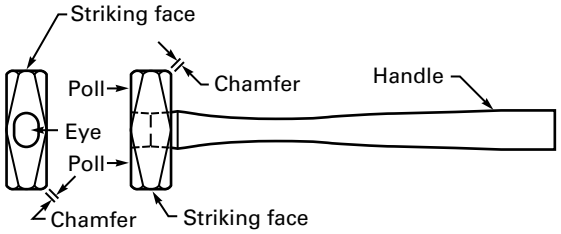

(a) Nevada Long-Pattern Striking Hammer

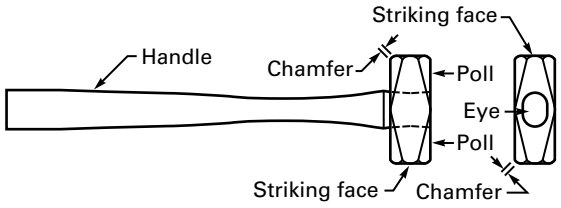

(b) Oregon Short-Pattern Striking Hammer

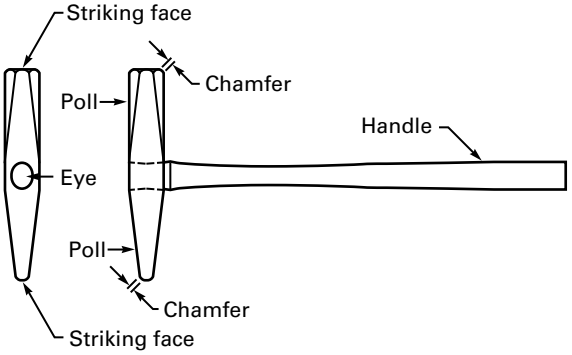

(c) Railroad Spike Maul, Standard Pattern

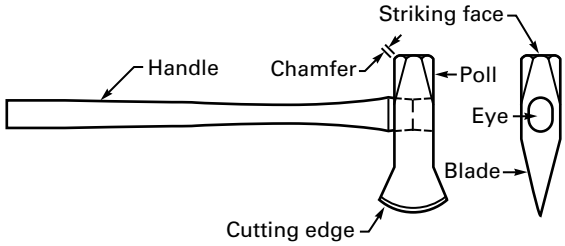

(d) Woodchopper's Maul

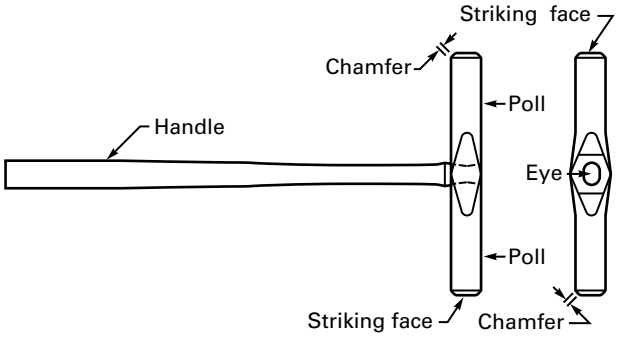

(e) Railroad Spike Maul, Bell Pattern

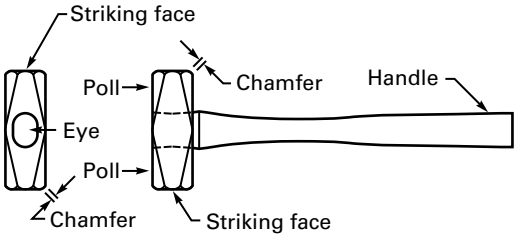

(f) Hand Drilling Hammer

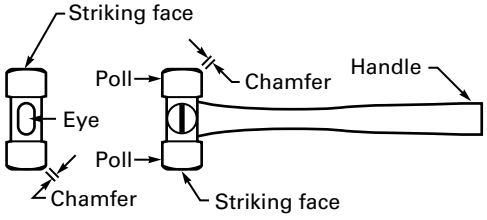

(g) Lineman's or Farrier's Turning Hammer

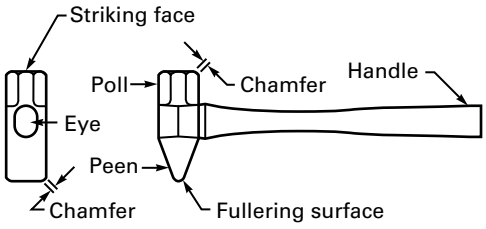

(h) Blacksmith's Cross Peen Sledge

FIG. 1 NOMENCLATURE FOR HEAVY STRIKING TOOLS

Copyright ASME International
Provided by IHS under license with ASME
No reproduction or networking permitted without license from IHS Not for Resale

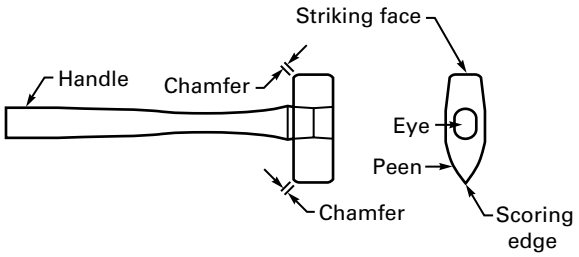

(i) Spalling Hammer

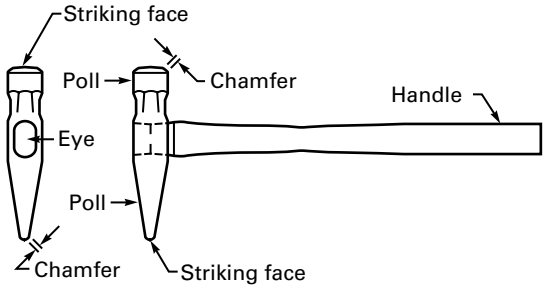

(j) Ship or Boat Maul

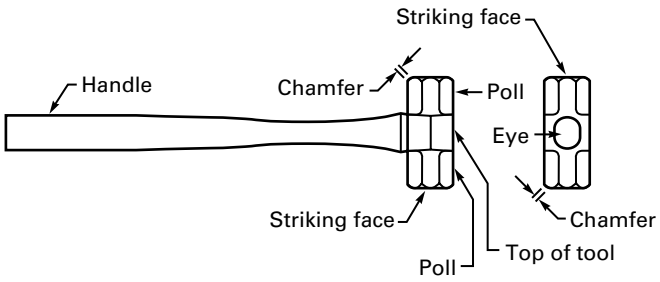

(k) Blacksmith's Double-Face Sledge

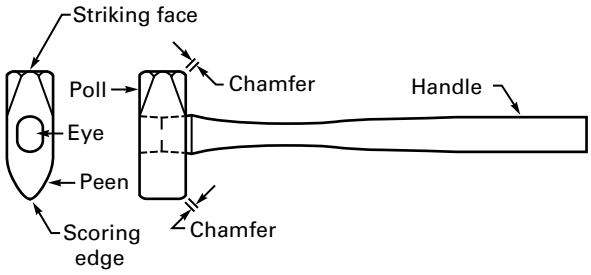

(l) Stone Sledge

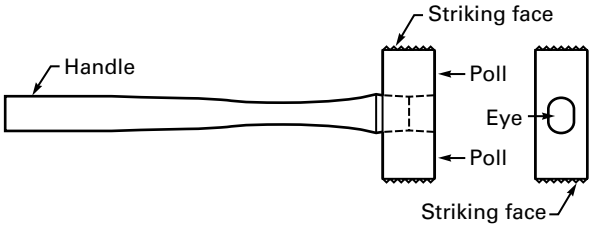

(m) Bush Hammer

FIG. 1 NOMENCLATURE FOR HEAVY STRIKING TOOLS (CONT'D)

ANSI Z87.1-1989, Practice for Occupational and Educational Eye and Face Protection
ANSI Z87.1a-1991, Supplement
ANSI Z535.4-1991, Product Safety Signs and Labels
Publisher: American National Standards Institute (ANSI), 11 West 42nd Street, New York, NY 10036

ASTM A 322-91, Standard Specification for Steel Bars, Alloy, Standard Grades
ASTM A 576-90b, Standard Specification for Steel Bars, Carbon, Hot-Wrought, Special Quality
ASTM A 681-94, Standard Specification for Tool Steels Alloy
ASTM E 18-00, Standard Test Methods for Rockwell Hardness and Rockwell Superficial Hardness of Metallic Materials

Publisher: American Society for Testing Materials (ASTM), 100 Barr Harbor Drive, West Conshohocken, PA 19428

Guide to Hand Tools — Selection, Safety Tips, Proper Use and Care
Publisher: Hand Tools Institute (HTI), 25 North Broadway, Tarrytown, NY 10591

Copyright ASME International
Provided by IHS under license with ASME
No reproduction or networking permitted without license from IHS
Not for Resale

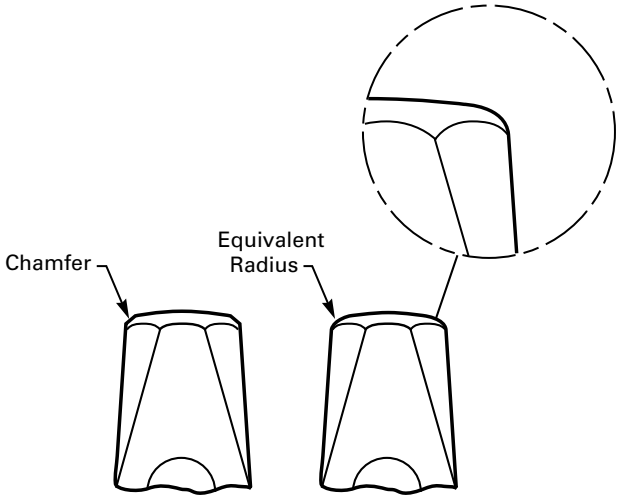

FIG. 2 CHAMFER / EQUIVALENT RADIUS

3 DEFINITIONS (See Figs. 1 and 2, as applicable)

For the purpose of this Standard, the following definitions apply:

blade: the broad tapering portion of the maul between the eye and the cutting edge of the woodchopper's maul.

chamfer: the bevel or equivalent radius encircling the perimeter of the striking face. Also, the bevel on the ends of fullering surfaces and scoring edges (see Fig. 2).

cutting edge: the sharpened end of the blade of the woodchopper's maul.

eye: an opening or aperture in the head into which the handle is inserted if the handle is separate.

fullering surface: the rounded surface directly opposite the striking face of the blacksmith's cross-peen sledge.

handle: the portion that protrudes from the head and by which the tool is held.

handle grip: additional material securely attached to the handle to be gripped during use.

peen: the tapered portion of the hammer or sledge between the eye and the scoring edge or fullering surface.

poll: the portion of the hammer, sledge, maul, or bush hammer between the eye and the chamfer or striking face.

safety message: the information imprinted on or affixed to the hammer that is intended to promote safety.

scoring edge: the edge directly opposite the striking face of spalling hammers and stone sledges.

striking face: the portion of the head, exclusive of the poll and chamfer located either on both ends of the head or on the end of the head opposite a peen or blade.

striking-face crown: exclusive of spalling hammers and bush hammers, the convex shape or radius of the striking face.

4 GENERAL REQUIREMENTS

4.1 Design

Heavy striking tools shall have a striking face on one end while the other end shall have a striking face or a special-purpose shape. Typical styles of heavy striking tools are shown in Fig. 1. The names given in Fig. 1 are those generally recognized. The styles covered by the Standard are not limited to those named or illustrated.

4.1.1 Striking faces on all heavy striking tools, except spalling hammers and bush hammers, shall have a striking-face crown.

4.1.2 Striking faces of all heavy striking tools except bush hammers shall have a chamfer of approximately 45 deg or equivalent radius all around the perimeter with a width equal to approximately one-tenth the width across the poll directly behind the chamfer angle. For example, if the width across the poll directly behind the chamfer equals 2.0 in. (51 mm), then the chamfer width would be approximately 0.20 in. (5.1 mm).

4.1.3 The ends of fullering surfaces and scoring edges shall have a chamfer of approximately 45 deg (or equivalent radius).

4.1.4 Handles shall be of any design, including ergonomic, that will withstand the tests specified in paras. 4.4.3 and 4.4.4.

4.1.5 The tool shall be free of nonfunctional sharp edges, points, and surface roughness that could inflict personal injury when handling the tool.

4.2 Materials

4.2.1 Heads shall be made from special-quality, fine grain, hot-rolled carbon steel bars conforming to the chemical requirements specified in Table 1 and to ASTM A 576. Equivalent material such as alloy steel

--`,,`-`-`,,`,,`,`,,`---
Copyright ASME International
Provided by IHS under license with ASME
No reproduction or networking permitted without license from IHS
Not for Resale

TABLE 1 CHEMICAL PROPERTIES OF HEAVY STRIKING TOOL HEADS

	Required Percentage of Element	
Element	Min.	Max.
Carbon	0.45	0.88
Manganese	0.30	1.20
Phosphorus	. . .	0.04
Sulfur	. . .	0.05
Silicon	. . .	0.35

in conformance with ASTM A 322 or ASTM A 681 may also be used.

4.2.2 Heads shall be free of manufacturing and material defects such as seams, laps, pipes, and cold shuts that would jeopardize sound construction. They shall conform to the requirements for mechanical properties specified in para. 4.3 and shall withstand the striking test specified in para. 4.4.3.

4.2.3 Handles shall be made of any suitable material that will withstand the tests specified in paras. 4.4.3 and 4.4.4.

4.3 Mechanical Properties

4.3.1 All striking faces, except for those of woodchopper's mauls (see para. 4.3.2), shall be hardened and tempered to 45 HRC to 60 HRC or equivalent. The steel directly behind the striking face (poll) shall be a toughened supporting core that gradually decreases in hardness.

4.3.2 The striking faces of woodchopper's mauls shall be hardened and tempered to 44 HRC to 55 HRC or equivalent. The steel (poll) directly behind the striking face shall be a toughened supporting core that gradually decreases in hardness. The blades shall be hardened and tempered to 45 HRC to 60 HRC or equivalent for a minimum distance of 0.75 in. (19.0 mm) back from the cutting edge.

4.3.3 The peens of blacksmith's cross peen sledges, spalling hammers, and stone sledges shall be hardened and tempered to a hardness of 45 HRC to 60 HRC or equivalent for a minimum distance of 0.50 in. (12.7 mm) back from the fullering surface or scoring edge.

4.3.4 Striking faces shall not sink, mushroom, chip, crack, or spall when subjected to the striking test specified in para. 4.4.3 (see para. 4.4.1).

4.3.5 Handles shall not loosen or separate from the head, crack, or break when subjected to the tests specified in paras. 4.4.3 and 4.4.4.

4.4 Tests

Many tests required herein are inherently hazardous and adequate safeguards for personnel and property shall be employed in conducting such tests.

4.4.1 General. Heavy striking tools shall be capable of meeting tests specified in paras. 4.4.2 through 4.4.4. Separate (new) hammers shall be used for each test. Failure to meet the requirements of any one of the tests indicates that the hammers are not in compliance with this Standard.

4.4.2 Hardness Determination Test. Hardness determinations with respect to striking faces, peens, and blades shall be made on a fixtured tool or on a mounted or unmounted specimen that has been cut from the tool using the wet abrasive or other equivalent method. Any hardness test that utilizes equipment and methods equivalent to Rockwell hardness determination as specified in ASTM E 18 will be acceptable.

4.4.3 Striking and Tensile Force Test. Sample hammers shall be subjected to the striking test as specified in paras. (a) or (b), depending on the handle length. Following the striking test, assemblies consisting of two or more separate parts (head and handle) shall not loosen or separate when subjected to a static tensile force of 1,000 lbf (4 448 N).

(a) For tools having overall handle lengths of less than 24 in. (61 cm), the sample tool shall receive 20 full swinging blows by a person of average build, 160 lb to 180 lb (73 kg to 82 kg), or the mechanical equivalent, commensurate with the end use and weight of the tool, against the smooth, flat or slightly convex surface of a rigidly supported steel object with a minimum diameter of 3.0 in. (76 mm) and a minimum length of 2.0 in. (51 mm), the hardness of which shall be equivalent to a hardness of 92 HRB to 105 HRB.

(b) For tools having overall handle lengths of 24 in. (61 cm) or greater, the sample tool shall receive 100 full swinging blows by a person of average build, 160 lb to 180 lb (73 kg to 82 kg), or the mechanical equivalent, commensurate with the end use and weight of the tool, on a steel die block, the hardness of which shall be equivalent to a hardness of 92 HRB to 105 HRB. The test block shall be 10.0 in. (254 mm) square or larger, with a thickness of at least 8.0 in. (203 mm).

Copyright ASME International
Provided by IHS under license with ASME
No reproduction or networking permitted without license from IHS
Not for Resale

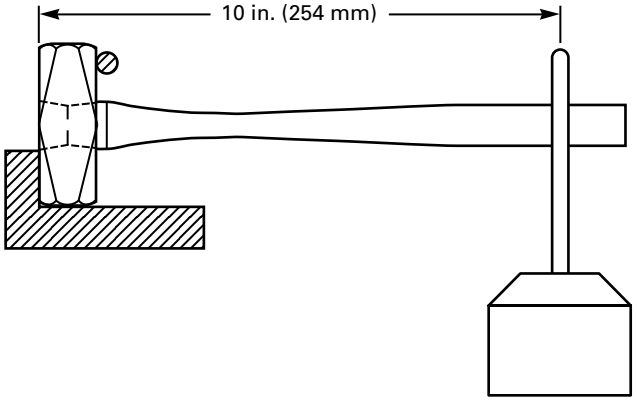

FIG. 3 TYPICAL STATIC FORCE TEST

On double-faced tools, only one selected face need be tested for compliance with this requirement.

4.4.4 Static Force Test. Assembled striking tool handles shall not break, loosen or otherwise fail when subjected to the loads or bending forces listed in paras. 4.4.4.1 or 4.4.4.2, depending on the head weight, when

(a) the striking tool head is locked securely in the test fixture with the striking face down and with the handle extended in the horizontal plane; and

(b) a static force is applied vertically at a point on the handle measuring 10.0 in. (254 mm) from the top of the tool head. (See Fig. 3.)

4.4.4.1 Striking tools with a head weight of up to and including 4 lb (1.8 kg) shall withstand a static force of 150 lbf (667 N).

4.4.4.2 Striking tools with a head weight of greater than 4 lb (1.8 kg) shall withstand a static force of 250 lbf (1 112 N).

5 SAFETY REQUIREMENTS AND LIMITATIONS OF USE

(a) A blow of a heavy striking tool should always be struck squarely with the striking face parallel with the surface being struck. Glancing blows, overstrikes, and under-strikes should be avoided.

(b) To avoid possible eye or other bodily injury, striking tools shall be used only for the purposes specified in para. 1.1.

(c) Safety goggles or equivalent eye protection conforming to ANSI Z87.1 shall be worn by the user and by all persons in the immediate area where any striking tool is being used to avoid possible eye injury from flying objects.

(d) The sides of the polls or peens (see Fig. 1) shall not be used for striking or pounding.

(e) Heavy striking tools shall not be struck by another striking tool.

(f) The heads of heavy striking tools shall be inspected prior to each use and their use discontinued at the first sign of chipping, mushrooming, or cracking.

(g) No area, section, or portion of the striking tool shall be ground, welded, treated by reheating, or otherwise altered from the original condition as furnished by the manufacturer. However, a dull cutting edge should be redressed to its original contour using a hand file or whetstone.[1]

(h) Handles shall be inspected prior to each use and damaged handles shall be replaced. Handles of tools shall be free of splinters or cracks and shall be kept tight in the head of the tool. Replacements shall withstand the tests specified in paras. 4.4.3 and 4.4.4 and shall be equivalent to the original handle in size and quality.

(i) When provided, handle grips that have loosened from the handle shall be tightened or replaced.

(j) Instructors and employers shall stress proper use and safety in the use of striking tools and shall emphasize the necessity to wear and ensure the use of safety goggles or equivalent eye protection. The publication *Guide to Hand Tools — Selection, Safety Tips, Proper Use and Care* provides guidelines for safe use of these tools.

(k) Each striking tool assembly shall be stamped, labeled, or otherwise marked by the manufacturer with the following safety message or equivalent.



WARNING
WEAR SAFETY GOGGLES
USER AND BYSTANDER

This safety message shall be located in a position that will not interfere with the quality or performance of the tool.

The above safety message shall also appear on all replacement handles.

Pictorials are an accepted equivalent. The principles set forth in ANSI Z535.4 shall be used as the guide for alternate, equivalent methods of labeling.

[1] It is understood that industrial users with adequate facilities and properly trained personnel may choose to redress or resharpen these tools by other means without altering the metallurgical characteristics of the tools.

Copyright ASME International
Provided by IHS under license with ASME
No reproduction or networking permitted without license from IHS
Not for Resale

AMERICAN NATIONAL STANDARDS FOR HAND TOOLS

Socket Wrenches, Hand (Inch Series) B107.1-1993
Socket Wrenches, Extensions, Adaptors, and Universal Joints, Power Drive (Impact) (Inch Series) B107.2-1995
Socket Wrenches, Power Drive (Non-Impact) (Inch Series) . . . . . B107.3-1978(R1991)
Driving and Spindle Ends for Portable Hand, Impact, Air, and Electric Tools (Percussion Tools Excluded) B107.4M-1995
Socket Wrenches, Hand (Metric Series) B107.5M-1994
Wrenches, Box, Angled, Open End, Combination, Flare Nut, and Tappet (Inch Series) B107.6-1994
Adjustable Wrenches B107.8M-1996
Wrenches, Box, Angled, Open End, Combination, Flare Nut, and Tappet (Metric Series) B107.9M-1994
Handles and Attachments for Hand Socket Wrenches — Inch and Metric Series B107.10M-1996
Pliers, Diagonal Cutting, and Nippers, End Cutting B107.11M-1993
Nut Drivers (Spin Type, Screwdriver Grip) (Inch Series) B107.12-1997
Pliers — Long Nose, Long Reach B107.13M-1996
Hand Torque Tools B107.14M-1994
Flat Tip and Phillips Screwdrivers B107.15-1993
Shears (Metal Cutting, Hand) B107.16M-1998
Gages, Wrench Openings, Reference B107.17M-1997
Pliers (Wire Twister) B107.18M-1996
Pliers, Retaining Ring B107.19-1993
Pliers (Lineman's, Iron Worker's, Gas, Glass, Fence, and Battery) B107.20M-1998
Wrench, Crowfoot Attachments B107.21-1998
Electronic Cutters B107.22M-1998
Pliers, Multiple Position, Adjustable B107.23M-1997
Pliers — Performance Test Methods B107.25M-1996
Pliers, Multiple Position (Electrical Connector) B107.27-1996
Electronic Torque Instruments B107.28M-1997
Electronic Tester, Hand Torque Tools B107.29M-1997
Screwdrivers, Cross Tip Gaging B107.31M-1997
Socket Wrenches for Spark Plugs B107.34M-1997
Nut Drivers (Spin Type, Screwdriver Grip) (Metric Series) B107.35M-1997
Electronic Pliers B107.38M-1998
Nail Hammers — Safety Requirements B107.41M-1997
Hatchets: Safety Requirements B107.42M-1997
Wood-Splitting Wedges: Safety Requirements B107.43M-1997
Glaziers' Chisels and Wood Chisels: Safety Requirements B107.44M-1998
Ripping Chisels and Flooring/Electricians' Chisels: Safety Requirements B107.45M-1998
Stud, Screw, and Pipe Extractors: Safety Requirements B107.46M-1998
Metal Chisels: Safety Requirements B107.47M-1998
Metal Punches and Drift Pins: Safety Requirements B107.48M-1998
Nail Sets: Safety Requirements B107.49M-1998
Brick Chisels and Brick Sets: Safety Requirements B107.50M-1998
Star Drills: Safety Requirements B107.51-2001
Nail-Puller Bars: Safety Requirements B107.52M-1998
Ball Peen Hammers: Safety Requirements B107.53M-1998
Heavy Striking Tools: Safety Requirements B107.54-2001
Axes: Safety Requirements B107.55M-1998
Body Repair Hammers and Dolly Blocks:Safety Requirements B107.56-1999
Bricklayers' Hammers and Prospecting Picks: Safety Requirements B107.57-2001
Riveting, Scaling, and Tinner's Setting Hammers: Safety Requirements B107.58M-1998

The ASME Publications Catalog shows a complete list of all the Standards published by the Society. For a complimentary catalog, or the latest information about our publications, call 1-800-THE-ASME (1-800-843-2763).

Copyright ASME International
Provided by IHS under license with ASME
No reproduction or networking permitted without license from IHS
Not for Resale

ISBN 0-7918-2668-6



N16001

Copyright ASME International
Provided by IHS under license with ASME
No reproduction or networking permitted without license from IHS

Not for Resale