ASME B107.45-2002
(Revision of ASME B107.45M-1998)

RIPPING CHISELS AND FLOORING/ ELECTRICIANS' CHISELS

AN AMERICAN NATIONAL STANDARD

The American Society of Mechanical Engineers

Copyright ASME International
Provided by IHS under license with ASME
No reproduction or networking permitted without license from IHS

Not for Resale

The American Society of Mechanical Engineers

AN AMERICAN NATIONAL STANDARD

RIPPING CHISELS AND FLOORING/ ELECTRICIANS' CHISELS

ASME B107.45-2002
(Revision of ASME B107.45M-1998)

Copyright ASME International
Provided by IHS under license with ASME
No reproduction or networking permitted without license from IHS
Not for Resale

Date of Issuance: November 25, 2002

This Standard will be revised when the Society approves the issuance of a new edition. There will be no addenda issued to this edition.

ASME issues written replies to inquiries concerning interpretations of technical aspects of this Standard. Interpretations are published on the ASME Web site under the Committee Pages at http://www.asme.org/codes/ as they are issued.

ASME is the registered trademark of The American Society of Mechanical Engineers.

This code or standard was developed under procedures accredited as meeting the criteria for American National Standards. The Standards Committee that approved the code or standard was balanced to assure that individuals from competent and concerned interests have had an opportunity to participate. The proposed code or standard was made available for public review and comment that provides an opportunity for additional public input from industry, academia, regulatory agencies, and the public-at-large.

ASME does not "approve," "rate," or "endorse" any item, construction, proprietary device, or activity.

ASME does not take any position with respect to the validity of any patent rights asserted in connection with any items mentioned in this document, and does not undertake to insure anyone utilizing a standard against liability for infringement of any applicable letters patent, nor assume any such liability. Users of a code or standard are expressly advised that determination of the validity of any such patent rights, and the risk of infringement of such rights, is entirely their own responsibility.

Participation by federal agency representative(s) or person(s) affiliated with industry is not to be interpreted as government or industry endorsement of this code or standard.

ASME accepts responsibility for only those interpretations of this document issued in accordance with the established ASME procedures and policies, which precludes the issuance of interpretations by individuals.

No part of this document may be reproduced in any form,
in an electronic retrieval system or otherwise,
without the prior written permission of the publisher.

The American Society of Mechanical Engineers
Three Park Avenue, New York, NY 10016-5990

Copyright © 2002 by
THE AMERICAN SOCIETY OF MECHANICAL ENGINEERS
All rights reserved
Printed in U.S.A.

Copyright ASME International
Provided by IHS under license with ASME
No reproduction or networking permitted without license from IHS

Not for Resale

CONTENTS

Foreword iv
Standards Committee Roster v
Correspondence With the B107 Committee vi

1 Scope 1

2 Normative References 1

3 Definitions 1

4 Requirements 4

5 Tests 4

6 Safety Requirements and Limitations of Use 5

Figures
1 Nomenclature for Ripping Chisels 2
2 Nomenclature for Flooring/Electricians' Chisels 3
3 Permanent Set Test 5

Copyright ASME International
Provided by IHS under license with ASME
No reproduction or networking permitted without license from IHS
Not for Resale

FOREWORD

The American National Standards Committee B107, Socket Wrenches and Drives, under sponsorship by The American Society of Mechanical Engineers, was reorganized as an ASME Standards Committee, and its title was changed to Hand Tools and Accessories. In 1996, the B209 Committee, which had published an earlier version of this Standard as ANSI/HTI B209.7-1990, merged with the B107 Committee, and the B107 Committee scope was expanded to include safety considerations.

The purposes of this Standard are to define essential safety considerations specifically applicable to ripping chisels and flooring/electricians' chisels, to specify test methods to evaluate performance relating to the defined safety considerations, and to indicate limitations of safe use.

A principal change in this edition of the Standard is the allowance of any material that meets the performance and safety requirements specified.

The format of this Standard is in accordance with *The ASME Codes and Standards Writing Guide 2000*. Requests for interpretations of the technical requirements of this Standard should be expressed in writing to the Secretary, B107 Committee, at the address below.

Suggestions for the improvement of this Standard are welcome. They should be addressed to The American Society of Mechanical Engineers, Secretary, B107 Standards Committee, Three Park Avenue, New York, NY 10016-5990.

The requirements of this Standard become effective at the time of publication. This revision was approved as an American National Standard on September 16, 2002.

Copyright ASME International
Provided by IHS under license with ASME
No reproduction or networking permitted without license from IHS
Not for Resale

ASME STANDARDS COMMITTEE B107
Hand Tools and Accessories

(The following is the roster of the Committee at the time of approval of this Standard.)

OFFICERS

G. E. Olson, *Chair*
W. T. Pagac, *Vice Chair*
J. R. Bird, *Secretary*

COMMITTEE PERSONNEL

J. R. Bird, The American Society of Mechanical Engineers
J. D. Davidson, Sears Roebuck & Co.
P. Desmarais, Danaher Tool Group
J. S. Foote, Trade Association Management, Inc.
A. Herskovitz, Consultant
H. Kimball, Naval Air Warfare Center
R. R. McCullough, Consultant
D. S. McKittrick, Western Forge Corporation
G. E. Olson, Gene Olson, Engineering Consultant, Ltd.
W. T. Pagac, Snap-on, Inc.
D. Eggert, *Alternate,* Snap-on, Inc.
J. Ster, General Services Administration
S. Fjoser, *Alternate,* General Services Administration
R. B. Wright, Wright Tool Co.
W. Snyder, *Alternate,* Wright Tool Co.

SUBCOMMITTEE 4 — STRIKING AND STRUCK TOOLS

G. E. Olson, *Chair,* Gene Olson Engineering Consultants, Ltd.
J. Combites, Vaughan & Bushnell
J. D. Davidson, Sears Roebuck & Co.
W. T. Pagac, Snap-on, Inc.

Copyright ASME International
Provided by IHS under license with ASME
No reproduction or networking permitted without license from IHS
Not for Resale

CORRESPONDENCE WITH THE B107 COMMITTEE

General. ASME Standards are developed and maintained with the intent to represent the consensus of concerned interests. As such, users of this Standard may interact with the Committee by requesting interpretations, proposing revisions, and attending Committee meetings. Correspondence should be addressed to:

Secretary, B107 Standards Committee
The American Society of Mechanical Engineers
Three Park Avenue
New York, NY 10016-5990

Proposing Revisions. Revisions are made periodically to the Standard to incorporate changes that appear necessary or desirable, as demonstrated by the experience gained from the application of the Standard. Approved revisions will be published periodically.

The Committee welcomes proposals for revisions to this Standard. Such proposals should be as specific as possible, citing the paragraph number(s), the proposed wording, and a detailed description of the reasons for the proposal, including any pertinent documentation.

Interpretations. Upon request, the B107 Committee will render an interpretation of any requirement of the Standard. Interpretations can only be rendered in response to a written request sent to the Secretary of the B107 Standards Committee.

The request for interpretation should be clear and unambiguous. It is further recommended that the inquirer submit his/her request in the following format:

Subject:	Cite the applicable paragraph number(s) and the topic of the inquiry.
Edition:	Cite the applicable edition of the Standard for which the interpretation is being requested.
Question:	Phrase the question as a request for an interpretation of a specific requirement suitable for general understanding and use, not as a request for an approval of a proprietary design or situation. The inquirer may also include any plans or drawings, which are necessary to explain the question; however, they should not contain proprietary names or information.

Requests that are not in this format may be rewritten in the appropriate format by the Committee prior to being answered, which may inadvertently change the intent of the original request.

ASME procedures provide for reconsideration of any interpretation when or if additional information that might affect an interpretation is available. Further, persons aggrieved by an interpretation may appeal to the cognizant ASME Committee or Subcommittee. ASME does not "approve," "certify," "rate," or "endorse" any item, construction, proprietary device, or activity.

Attending Committee Meetings. The B107 Standards Committee regularly holds meetings, which are open to the public. Persons wishing to attend any meeting should contact the Secretary of the B107 Standards Committee.

Copyright ASME International
Provided by IHS under license with ASME
No reproduction or networking permitted without license from IHS
Not for Resale

RIPPING CHISELS AND FLOORING/ELECTRICIANS' CHISELS

1 SCOPE

This Standard provides performance and safety requirements for ripping chisels and flooring/electricians' chisels. These chisels are intended for use in cutting wood and light prying, such as cutting the tongue of installed flooring sections and raising and removing floor planks. This Standard is intended to serve as a guide in selecting, testing, and using the tools covered. It is not the purpose of this Standard to specify the details of manufacturing.

This Standard is also meant to serve as a guide in developing manuals and posters and for training personnel to work safely.

This Standard may be used as a guide by state authorities or other regulatory bodies in the formulation of laws or regulations. It is also intended for voluntary use by establishments that use or manufacture the tools covered. The methods employed to ensure compliance with this Standard shall be determined by the proper regulatory or administrative authority.

2 NORMATIVE REFERENCES

The following documents form a part of this Standard to the extent specified herein. At the time of publication, the editions indicated were valid. All standards are subject to revision, and parties to agreements based on this American National Standard are encouraged to investigate the possibility of applying the most recent edition of the documents indicated below.

ANSI Z87.1-1998, Practice for Occupational and Educational Eye and Face Protection

ANSI Z535.4-1998, Product Safety Signs and Labels

Publisher: American National Standards Institute (ANSI), 25 West 43rd Street, New York, NY 10036

ASTM E 18-00, Standard Test Methods for Rockwell Hardness and Rockwell Superficial Hardness of Metallic Materials

Publisher: American Society for Testing and Materials (ASTM), 100 Barr Harbor Drive, West Conshohocken, PA 19428

Guide to Hand Tools — Selection, Safety Tips, Proper Use and Care

Publisher: Hand Tools Institute (HTI), 25 North Broadway, Tarrytown, NY 10591

3 DEFINITIONS

See Figs. 1 and 2 as applicable.

bevel: the angular or curved portion of the chisel adjacent to the cutting edge or prying edge extending to the taper.

body: the straight portion of the chisel between the chamfer and the taper.

chamfer: the angled flat surface or equivalent radius between the struck face and the body of the chisel encircling the perimeter of the struck face.

cutting edge: the edge formed by the bevel directly opposite the struck face.

equivalent: the word *equivalent* in this Standard shall be interpreted to mean alternative designs or features that will provide an equal degree of performance and safety.

hardness: the condition of the chisel resulting from heat treatment.

nail pulling slot: when provided, the V-shaped slot or opening formed in the taper of certain types of ripping chisels.

permanent set: plastic deformation of the tool as measured per para. 5.3 herein.

rounded head: an equivalent design for the struck face and chamfer portion of the chisel.

safety message: information imprinted on or affixed to the chisel that is intended to promote safety.

shall and *should:* mandatory requirements of this Standard are characterized by the word *shall*. If a provision is of an advisory nature, it is indicated by the word *should* or is stated as a recommendation.

Copyright ASME International
Provided by IHS under license with ASME
No reproduction or networking permitted without license from IHS
Not for Resale

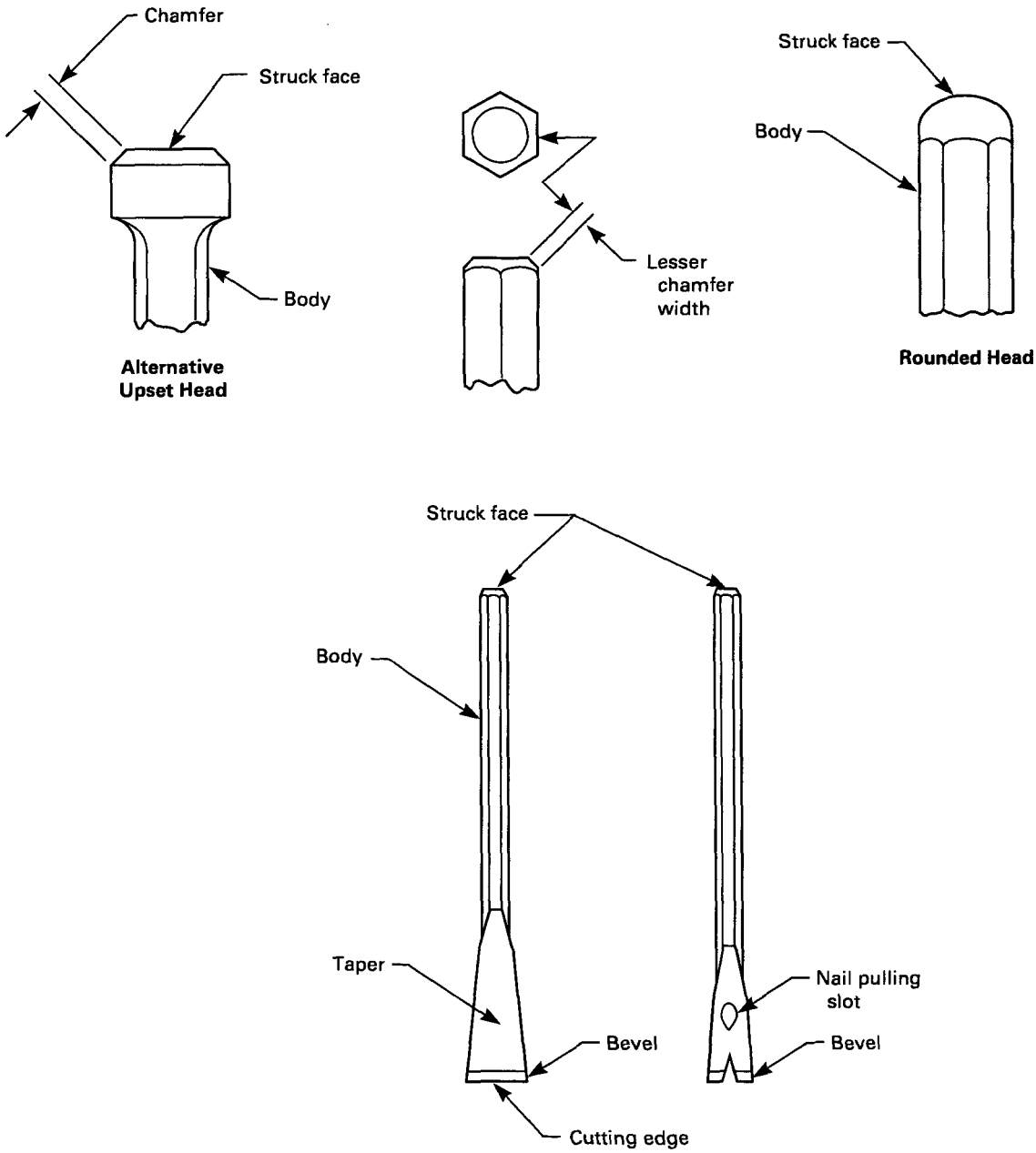

FIG. 1 NOMENCLATURE FOR RIPPING CHISELS

Copyright ASME International
Provided by IHS under license with ASME
No reproduction or networking permitted without license from IHS
Not for Resale

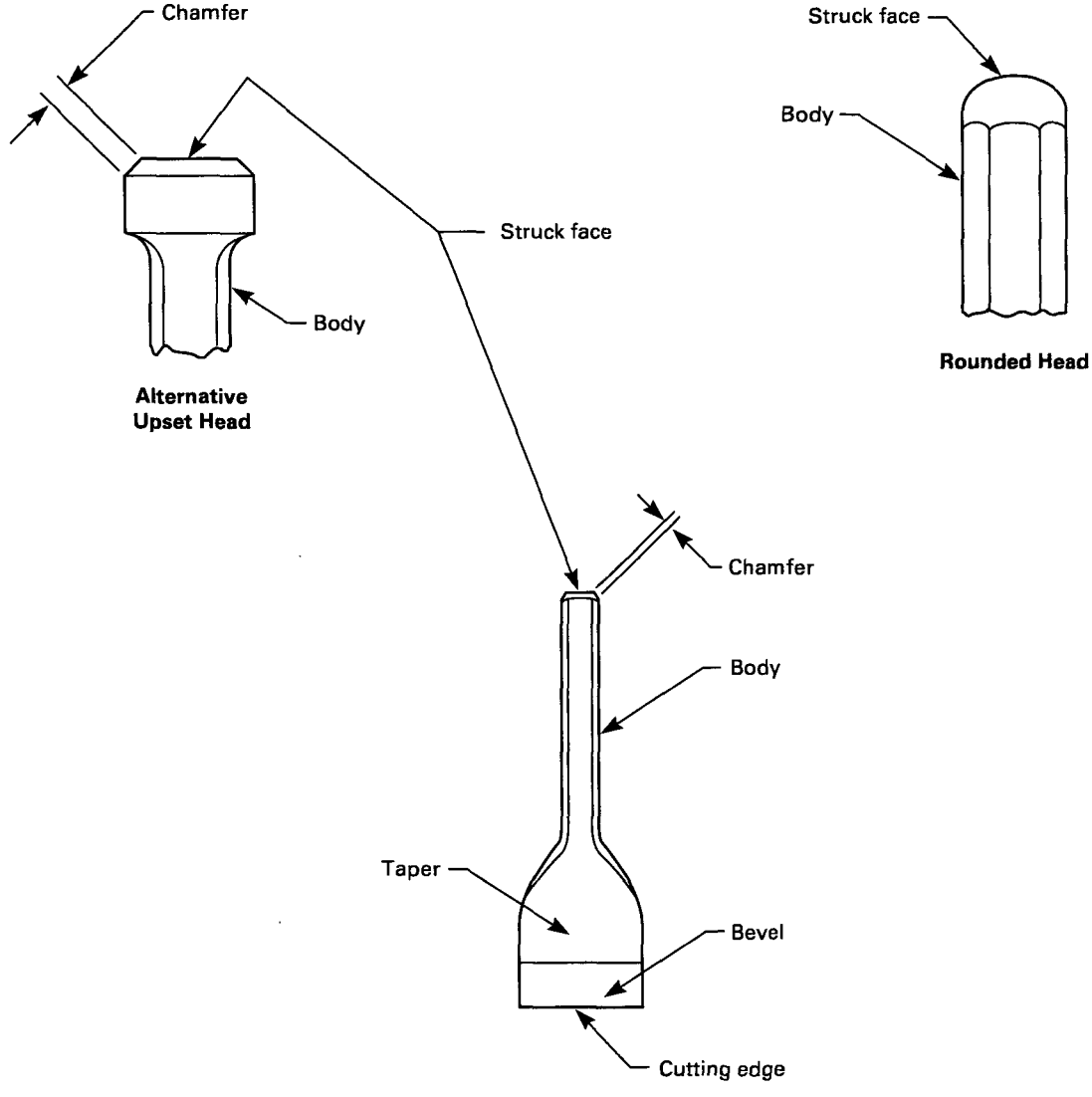

FIG. 2 NOMENCLATURE FOR FLOORING/ELECTRICIANS' CHISELS

Copyright ASME International
Provided by IHS under license with ASME
No reproduction or networking permitted without license from IHS Not for Resale

struck face: the portion of the chisel directly opposite the cutting edge.

taper: the portion of the chisel between the body and the bevel with a gradually reducing cross-sectional area.

upset head: the portion of the chisel body having an enlarged cross-sectional area at the struck end of the tool including and underlying the struck face.

4 REQUIREMENTS

4.1 Design

Chisels shall have a cutting edge on one end and a struck face on the opposite end to be struck by a hammer of the appropriate type and size. The appropriate hammer shall have a striking face approximately 0.375 in. (9.53 mm) larger in diameter than the struck face of the chisel. Styles of chisels are listed in paras. 4.1.1 and 4.1.2 and are shown in Figs. 1 and 2.

4.1.1 Ripping chisels are those used as a lever for light prying in dismantling wood construction and removing nails.

4.1.2 Flooring/electricians' chisels are those used for cutting high spots and tongues from subflooring and removing installed floor sections. These chisels are also used for making cutouts for electrical outlet boxes.

4.1.3 The struck face of chisels shall have a convex shape or a flat surface with a chamfer (or equivalent radius).

4.1.4 The struck face shall have a chamfer of approximately 45 deg (or equivalent radius) around the perimeter with the lesser width (see Fig. 1) equal to approximately one-tenth of the body stock size. For example, if the body stock size equals 1 in. (25.4 mm), then the lesser chamfer width should equal approximately 0.1 in. (2.5 mm).

4.1.5 All chisels shall be free of nonfunctional sharp edges, points, and surface roughness that could inflict personal injury on the user when handling the tool.

4.1.6 Chisels shall withstand applicable tests described in para. 5.

4.2 Materials

The materials used in the manufacture of chisels shall be such as to produce chisels conforming to the requirements specified herein.

4.3 Mechanical Properties

4.3.1 Chisels shall be hardened and tempered to 30 HRC to 52 HRC or equivalent for a distance of not less than 0.25 in. (6.4 mm) from the cutting edge.

4.3.2 The hardness of the struck face of the chisel shall not exceed 44 HRC or equivalent.

5 TESTS

Many tests required herein are inherently hazardous, and adequate safeguards for personnel and property shall be employed in conducting such tests.

Sample chisels shall be tested and shall conform to the requirements of the tests specified in paras. 5.1 through 5.3. Separate (new) samples shall be used for each of the tests. Failure to meet the requirements of any one of the tests indicates that the chisels do not comply with this Standard.

5.1 Hardness Determination Tests

Hardness determination shall be made in accordance with ASTM E18.

5.2 Impact Test

The chisel shall be mounted vertically with the cutting edge resting on a steel bar. The chisel shall be retained in a vertical position with a snug-fitting fixture permitting unrestricted vertical movement in response to the impact of the drop weight on the chisel struck face.

The bar shall have a minimum thickness of 0.75 in. (19.1 mm), a width of at least 0.25 in. (6.4 mm) greater than the width of the chisel cutting edges. The bar shall be mild steel (UNS G10180-G10300) and have a uniform hardness of 80 HRB to 85 HRB. The bar shall rest on a solid foundation, such as a steel block, weighing 20 lb (9 kg) or greater.

A 5 lb (2.3 kg) cylindrical weight with a striking face hardness of 45 HRC to 60 HRC shall be dropped twenty times (through seamless tubing slightly larger than the diameter of the weight) from a height of 10 in. (254 mm) onto the chisel struck face. The diameter of the striking face of the weight shall not be less than 0.375 in. (9.53 mm) larger than the struck face of the chisel. The test bar shall be moved after each drop of the weight to make a new impression.

There shall be no chipping, cracking, or dulling of the cutting edge; no mushrooming or chipping of the

Copyright ASME International
Provided by IHS under license with ASME
No reproduction or networking permitted without license from IHS

Not for Resale

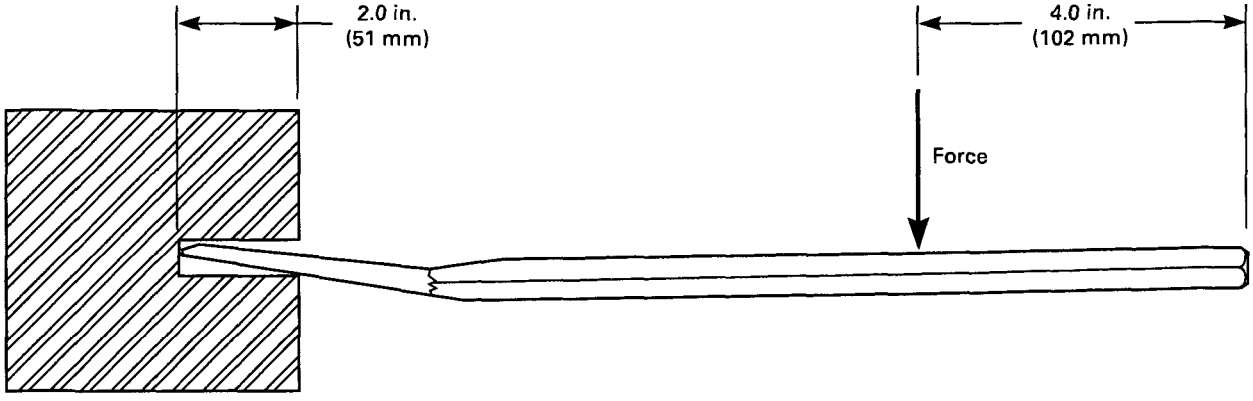

FIG. 3 PERMANENT SET TEST

struck face; and no bending of the chisel. Normal deformation at either end is permitted.[1]

5.3 Permanent Set

5.3.1 Flooring/Electricians' Chisels. Samples shall be supported as illustrated in Fig. 3 and a bending moment of 2,000 lbf-in. applied. After application of the bending moment, the sample shall be removed from the supporting fixture and measured for permanent set. Permanent set is determined by measuring the vertical displacement, relative to the horizontal plane through the centerline of the sample, of a fixed point on the chisel handle (preferably near the struck face end of the chisel) and dividing the displacement by the distance from the fulcrum. Samples pass this test only if all of the following conditions are met after loading the tool:

(a) the sample does not fracture;

(b) the sample does not permanently deform more than 0.01 in. per in.

5.3.2 Ripping Chisels. Samples shall be supported as illustrated in Fig. 3 and a bending moment of 4,500 lbf-in. applied. After application of the bending moment, the sample shall be removed from the supporting fixture and measured for permanent set. Permanent set is determined by measuring the vertical displacement, relative to the horizontal plane through the centerline of the sample, of a fixed point on the chisel handle (preferably near the struck face end of the chisel) and dividing the displacement by the distance from the fulcrum. Samples pass this test only if all of the following conditions are met after loading the tool:

(a) the sample does not fracture;

(b) the sample does not permanently deform more than 0.1 in. per in.

[1] The test is so severe that a degree of permissible deformation, such as denting of the struck face, can be anticipated. A much less severe test would avoid this, but it would not provide the level of safety assurance desired.

6 SAFETY REQUIREMENTS AND LIMITATIONS OF USE

Instructors and employers shall stress proper use and safety in the use of striking tools and shall emphasize the necessity to wear, and ensure the use of, safety goggles or equivalent eye protection. The publication *Guide to Hand Tools — Selection, Safety Tips, Proper Use and Care* provides guidelines for the safe use of these tools.

(a) Ripping chisels and flooring/electricians' chisels are special purpose tools designed and intended only for use as listed in paras. 4.1.1 and 4.1.2.

(b) To avoid possible eye or other bodily injury, these tools shall not be used to cut metal or masonry objects.

(c) A hammer blow should always be struck squarely with the hammer face parallel with the struck face of the chisel. Glancing blows, overstrikes, and understrikes should be avoided.

(d) Chisels shall not be struck on any surface other than the struck face. The appropriate type and size of hammer shall have a striking face with a diameter not less than 0.375 in. (9.53 mm) larger than the struck face of the chisel.

(e) Safety goggles or equivalent eye protection conforming to ANSI Z87.1 shall be worn by the user and by all persons in the immediate area in which any

Copyright ASME International
Provided by IHS under license with ASME
No reproduction or networking permitted without license from IHS Not for Resale

chisel is being used to avoid possible eye injury from flying objects.

(f) Chisels shall be inspected prior to each use and their use discontinued at the first sign of bending of the chisel, or of chipping or cracking of the cutting edge or struck face.

(g) Except as indicated in paras. 6(h) and 6(i), no area, section, or portion of the chisel shall be ground, welded, treated by reheating, or otherwise altered from the original condition as furnished by the manufacturer.

(h) Dulling of the cutting edge may occur from tool usage. The cutting edge shall be resharpened or redressed to its original contour only by the use of a whetstone or hand file.[2]

[2] It is understood that industrial users with adequate facilities and properly trained personnel may choose to redress or resharpen these tools by other means without altering the metallurgical characteristics of the tools.

(i) At the first indication of mushrooming, the chisel struck face shall be redressed to its original contour by the use of a hand file.[2]

(j) Each chisel shall be stamped, labeled, or otherwise marked by the manufacturer with the following safety message or equivalent:



WARNING
WEAR SAFETY GOGGLES
USER AND BYSTANDER

This safety message shall be located in a position that will not interfere with the quality or performance of the tool.

The principles set forth in ANSI Z535.4 shall be used as the guide for alternate, equivalent methods of labeling.

Copyright ASME International
Provided by IHS under license with ASME
No reproduction or networking permitted without license from IHS

Not for Resale

ISBN 0-7918-2797-6



9 780791 827970



N14502

Copyright ASME International
Provided by IHS under license with ASME
No reproduction or networking permitted without license from IHS

Not for Resale