ASME B107.4-2005
(Revision of ASME B107.4M-1995)

Driving and Spindle Ends for Portable Hand, Impact, Air, and Electric Tools (Percussion Tools Excluded)

AN AMERICAN NATIONAL STANDARD



The American Society of Mechanical Engineers

Copyright ASME International
Provided by IHS under license with ASME
No reproduction or networking permitted without license from IHS

Not for Resale

ASME B107.4-2005
(Revision of ASME B107.4M-1995)

Driving and Spindle Ends for Portable Hand, Impact, Air, and Electric Tools (Percussion Tools Excluded)

AN AMERICAN NATIONAL STANDARD

The American Society of Mechanical Engineers
Three Park Avenue • New York, NY 10016

Copyright ASME International
Provided by IHS under license with ASME
No reproduction or networking permitted without license from IHS
Not for Resale

Date of Issuance: September 15, 2005

This Standard will be revised when the Society approves the issuance of a new edition. There will be no addenda issued to this edition.

ASME issues written replies to inquiries concerning interpretations of technical aspects of this Standard. Interpretations are published on the ASME Web site under the Committee Pages at http://www.asme.org/codes/ as they are issued.

ASME is the registered trademark of The American Society of Mechanical Engineers.

This code or standard was developed under procedures accredited as meeting the criteria for American National Standards. The Standards Committee that approved the code or standard was balanced to assure that individuals from competent and concerned interests have had an opportunity to participate. The proposed code or standard was made available for public review and comment that provides an opportunity for additional public input from industry, academia, regulatory agencies, and the public-at-large.

ASME does not "approve," "rate," or "endorse" any item, construction, proprietary device, or activity.

ASME does not take any position with respect to the validity of any patent rights asserted in connection with any items mentioned in this document, and does not undertake to insure anyone utilizing a standard against liability for infringement of any applicable letters patent, nor assume any such liability. Users of a code or standard are expressly advised that determination of the validity of any such patent rights, and the risk of infringement of such rights, is entirely their own responsibility.

Participation by federal agency representative(s) or person(s) affiliated with industry is not to be interpreted as government or industry endorsement of this code or standard.

ASME accepts responsibility for only those interpretations of this document issued in accordance with the established ASME procedures and policies, which precludes the issuance of interpretations by individuals.

No part of this document may be reproduced in any form,
in an electronic retrieval system or otherwise,
without the prior written permission of the publisher.

The American Society of Mechanical Engineers
Three Park Avenue, New York, NY 10016-5990

Copyright © 2005 by
THE AMERICAN SOCIETY OF MECHANICAL ENGINEERS
All rights reserved
Printed in U.S.A.

Copyright ASME International
Provided by IHS under license with ASME
No reproduction or networking permitted without license from IHS

Not for Resale

CONTENTS

Foreword v
Committee Roster vi
Correspondence With the B107 Committee vii

1 Scope 1

2 Definitions 1

3 Normative References 1

4 ISO Compatibility 1

5 Gage Use and Design 1

6 Spindles for Chucks 2

7 Hexagonal Drives 4

8 Square Drives 5

9 Spline Drives 15

10 Abrasion Tool Spindles 19

11 Circular Saw Arbors 21

Figures

1 Square Drive Specifications for Hand, Power, and Impact Wrenches — Internal End 5
2 Square Drive Specifications for Hand, Power, and Impact Wrenches — External End 8
3 Square Drive Gage Specifications for Hand, Power, and Impact Wrenches — External End 10

Tables

1 Threaded Spindles 2
2 Threaded Chucks 2
3 Tapered Spindles 3
4 Master Plug Gage Dimensions — Jacobs Taper 3
5 Hexagonal Chucks 4
6 Hexagonal Shanks 4
7 Square Drive Specifications for Hand, Power, and Impact Wrenches — Internal End 6
8 Square Drive Gage Specifications for Hand, Power, and Impact Wrenches — Internal End 7
9 Square Drive Specifications for Hand, Power, and Impact Wrenches — External End 9
10 Square Drive Gage Specifications for Hand, Power, and Impact Wrenches — External End 11
11A Square Drive Pull-off Force Gage Specifications for Designs C and D Hand, Power, and Impact Wrenches — External End 12
11B Square Drive Retention Force Gage Specifications for Design D (Recess Type) Hand, Power, and Impact Wrenches — Internal End 13

Copyright ASME International
Provided by IHS under license with ASME
No reproduction or networking permitted without license from IHS
Not for Resale

12 Square Drive Interchangeability Gage Specifications for Designs A and B Hand, Power, and Impact Wrenches — External End 14
13 Spline Drives — Internal Spline Proportions 15
14 Spline Drives — External Spline Proportions 16
15 Spline Drives — Internal Mounting Dimensions 17
16 Spline Drives — External Mounting Dimensions 18
17 Sanders and Polishers 19
18 Vertical and Angle Grinders for Unthreaded Wheels 19
19 Vertical and Angle Grinders for Threaded Wheels 20
20 Cone Wheel Grinders 20
21 Straight Wheel Grinders 21
22 Round Arbors 21

Nonmandatory Appendices

A Chucks and Spindles 22
B Mounting of Abrasive Wheels on Threaded Spindles 23

Copyright ASME International
Provided by IHS under license with ASME
No reproduction or networking permitted without license from IHS
Not for Resale

FOREWORD

The American National Standards Committee B107, Socket Wrenches and Drives, under sponsorship by the American Society of Mechanical Engineers, held its organizational meeting on June 28, 1967. Subcommittee 1 on Driving Ends for Portable Hand, Air, and Electric Tools and Subcommittee 3 on Spindle Ends for Portable Air and Electric Tools were subsequently organized. These two subcommittees took over the work that was originally handled by Technical Committee 28 of Standards Committee B5. The data contained in this Standard supersede that in the B107.4 1982(R1988) document.

The Committee subsequently undertook to task to revise the 1982 standard. The work was completed, and the revised standard was approved as an American National Standard on October 16, 1995.

The format of this Standard is in accordance with *The ASME Codes and Standards Writing Guide 2000*. Requests for interpretations, and suggestions for the improvement of this Standard, should be addressed to The American Society of Mechanical Engineers, Secretary, B107 Committee, Three Park Avenue, New York, NY 10016-5990.

The requirements of this Standard become effective at the time of publication. ASME B107.4-2005 was approved as an American National Standard on March 14, 2005.

Copyright ASME International
Provided by IHS under license with ASME
No reproduction or networking permitted without license from IHS
Not for Resale

ASME B107 STANDARDS COMMITTEE
Hand Tools and Accessories

(The following is the roster of the Committee at the time of approval of this Standard.)

OFFICERS

G. E. Olson, *Chair*
W. T. Pagac, *Vice Chair*
J. Karian, *Secretary*

COMMITTEE PERSONNEL

J. D. Davidson, Sears, Roebuck and Co.
P. A. Desmarais, Danaher Tool Group
J. S. Foote, Trade Association Management, Inc.
A. Garg, Stanley Works
R. A. Goldmann II, Klein Tools, Inc.
A. Herskovitz, Consultant
J. H. Karian, The American Society of Mechanical Engineers
D. S. McKittrick, Western Forge Corp.
G. E. Olson, Gene Olson Engineering Consultant, Ltd.
W. T. Pagac, Snap-on Tools
D. M. Eggert, *Alternate,* Snap-on Tools
J. M. Ster, General Services Administration
L. W. Fahlstrom, *Alternate,* General Services Administration

SUBCOMMITTEE 1 — WRENCHES

P. A. Desmarais, *Chair,* Danaher Tool Group
W. C. Snyder, *Vice Chair,* Wright Tool Co.
J. D. Davidson, Sears, Roebuck and Co.
R. A. Goldmann II, Klein Tools, Inc.
W. T. Pagac, Snap-on Tools

--`,,```,,,,````-`-`,,`,,`,`,,`---

Copyright ASME International
Provided by IHS under license with ASME
No reproduction or networking permitted without license from IHS

Not for Resale

CORRESPONDENCE WITH THE B107 COMMITTEE

General. ASME Codes are developed and maintained with the intent to represent the consensus of concerned interests. As such, users of this Code may interact with the Committee by requesting interpretations, proposing revisions, and attending Committee meetings. Correspondence should be addressed to:

Secretary, B107 Standards Committee
The American Society of Mechanical Engineers
Three Park Avenue
New York, NY 10016-5990

Proposing Revisions. Revisions are made periodically to the Code to incorporate changes, which appear necessary or desirable, as demonstrated by the experience gained from the application of the Code. Approved revisions will be published periodically.

The Committee welcomes proposals for revisions to this Code. Such proposals should be as specific as possible, citing the paragraph number(s), the proposed wording, and a detailed description of the reasons for the proposal, including any pertinent documentation.

Interpretations. Upon request, the B107 Committee will render an interpretation of any requirement of the Code. Interpretations can only be rendered in response to a written request sent to the Secretary of the B107 Standards Committee.

The request for interpretation should be clear and unambiguous. It is further recommended that the inquirer submit his/her request in the following format:

Subject:	Cite the applicable paragraph number(s) and a concise description.
Edition:	Cite the applicable edition of the Code for which the interpretation is being requested.
Question:	Phrase the question as a request for an interpretation of a specific requirement suitable for general understanding and use, not as a request for an approval of a proprietary design or situation. The inquirer may also include any plans or drawings, which are necessary to explain the question; however, they should not contain proprietary names or information.

Requests that are not in this format will be rewritten by the Committee prior to being answered, which may inadvertently change the intent of the original request.

ASME procedures provide for reconsideration of any interpretation when or if additional information that might affect an interpretation is available. Further, persons aggrieved by an interpretation may appeal to the cognizant ASME Committee. ASME does not "approve," "certify," "rate," or "endorse" any item, construction, proprietary device, or activity.

Attending Committee Meetings. The B107 Standards Committee holds meetings or telephone conferences, which are open to the public. Persons wishing to attend any meeting should contact the Secretary of the B107 Standards Committee or check our Web site at http://www.asme.org/codes/.

Copyright ASME International
Provided by IHS under license with ASME
No reproduction or networking permitted without license from IHS
Not for Resale

Copyright ASME International
Provided by IHS under license with ASME
No reproduction or networking permitted without license from IHS
Not for Resale

DRIVING AND SPINDLE ENDS FOR PORTABLE HAND, IMPACT, AIR, AND ELECTRIC TOOLS (PERCUSSION TOOLS EXCLUDED)

1 SCOPE

This Standard applies to portable power tools for drilling, grinding, polishing, sawing, and driving threaded fasteners and hand tools for driving threaded fasteners. Other tools not classed as percussion tools belong in this category and may be added by revision or addition through the usual procedure.

This Standard includes dimensions and tolerances for both driving and driven elements where such coordination is important and not established by reference to the pertinent American National Standards. All dimensions are in inches and millimeters.[1]

2 DEFINITIONS

percussion tools: hammers, chisels, scalers, tampers, clay diggers, and rock drills. Percussion tools are excluded from this Standard.

rounding values: when the next digit beyond the last digit to be retained is

(a) less than 5, the last digit to be retained is not changed

(b) 5 or more, the last digit to be retained is increased by one.

tool: as used in this Standard, a portable device for performing a mechanical operation with power from compressed air or electricity and hand operated.

3 NORMATIVE REFERENCES

The following is a list of publications referenced in this Standard.

ANSI B1.1-1989R01 Ed, Unified Inch Screw Threads (UN and UNR Thread Form)

ANSI B7.1-2000, Safety Requirements for the Use, Care, and Protection of Abrasive Wheels

ANSI B92.1-1996, Involute Splines and Inspection

Publisher: American National Standards Institute (ANSI), 25 West 43rd Street, New York, NY 10036

ISO 117-1:1996, Assembly tools for screws and nuts — Driving squares — Part 1: Driving squares for hand socket tools

ISO 1174-2:1996, Assembly tools for screws and nuts — Driving squares — Part 2: Driving squares for power socket tools

Publisher: International Organization for Standardization (ISO), 1 rue de Varembé, Case Postale 56, CH-1211 Genève 20, Switzerland/Suisse

4 ISO COMPATIBILITY

Italicization and bold type indicate ISO compatibility.

EXAMPLE: ***(38.214)***

5 GAGE USE AND DESIGN

The illustrations shown herein are descriptive, not restrictive, and not intended to preclude the manufacturer of products or gages which are otherwise in accordance with this Standard.

Manufacturers may use gages with tighter dimensions or tolerances than shown herein to ensure product acceptance.

Tolerances on gage dimensions within the Standard represent new manufactured or purchased gage sizes. The extreme size for all limit (GO and NO GO) gages shall not exceed the extreme limits of products specified within the Standard. All variations (manufacturing tolerance, calibration error, wear allowance, etc.) in the gages, whatever their cause or purpose, shall bring these gages within the extreme limits of this gage size specified within this Standard. Thus, a gage that represents a minimum limit may be larger, but never smaller, than the minimum specified for the product standard; likewise, the gage that represents a maximum limit may be smaller, but never larger, than the maximum size specified for the product standard.

[1] The values stated in U.S. customary units are to be regarded as the standard.

Copyright ASME International
Provided by IHS under license with ASME
No reproduction or networking permitted without license from IHS
Not for Resale

6 SPINDLES FOR CHUCKS

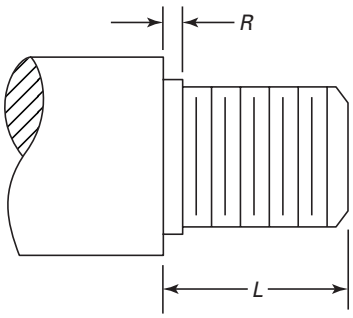

Table 1 Threaded Spindles, in.

Nominal Dia. and Thread UNF	Pitch Dia. Max.	Pitch Dia. Min.	*R*	*L*
3/8–24	0.3479	0.3455	1/16 ± 1/64	9/16 [Note (1)] +0.000 −0.030
1/2–20	0.4675	0.4649	1/16 ± 1/64	9/16 + 0.000 −0.030
5/8–16UN-2A	0.5844	0.5812	3/32 ± 1/64	11/16 + 0.000 −0.030
3/4–16	0.7094	0.7062	3/32 ± 1/64	11/16 + 0.000 −0.030

GENERAL NOTE: Threads right hand.

NOTE:
(1) Also 7/16.

Table 1M Threaded Spindles, mm

Nominal Dia. and Thread, in., UNF-2A	Pitch Dia. Max.	Pitch Dia. Min.	*R*	*L*
3/8–24	8.836	8.776	1.59 ± 0.39	14.29 [Note (1)] +0.00 −0.76
1/2–20	11.874	11.808	1.59 ± 0.39	14.29 +0.00 −0.76
5/8–16UN-2A	14.843	14.762	2.38 ± 0.39	17.46 +0.00 −0.76
3/4–16	18.018	17.937	2.38 ± 0.39	17.46 +0.00 −0.76

GENERAL NOTE: Threads right hand.

NOTE:
(1) Also 11.11.

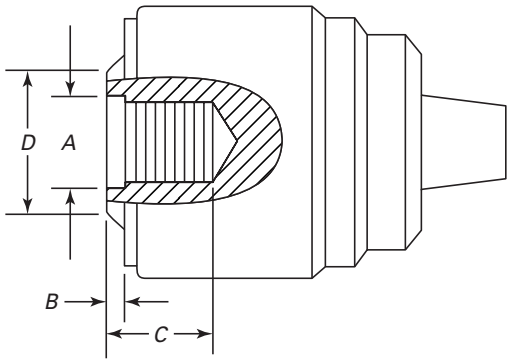

Table 2 Threaded Chucks, in.

Nominal Dia. and Thread	*A* Max.	*A* Min.	*B*, Min.	*C*, Min.	*D* [Note (1)], Nom.
3/8–24	0.385	0.380	0.115	19/32	5/8
1/2–20	0.510	0.503	0.115	19/32	7/8
5/8–16	0.635	0.629	0.146	25/32	1 1/8
3/4–16	0.760	0.754	0.146	13/16	1 1/4

NOTE:
(1) Reference Manufacturer's Practice.

Table 2M Threaded Chucks, mm

Nominal Dia. and Thread, in.	*A* Max.	*A* Min.	*B*, Min.	*C*, Min.	*D* [Note (1)], Nom.
3/8–24	9.77	9.65	2.92	15.09	15.88
1/2–20	12.95	12.78	2.92	15.09	22.23
5/8–16	16.12	15.98	3.71	19.84	28.58
3/4–16	19.30	19.15	3.71	20.64	31.75

NOTE:
(1) Reference Manufacturer's Practice.

Copyright ASME International
Provided by IHS under license with ASME
No reproduction or networking permitted without license from IHS
Not for Resale

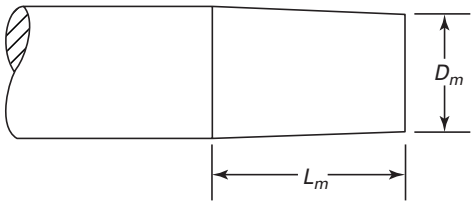

Table 3 Tapered Spindles, in.

Number [Note (1)]	D_m	L_m	Taper, in./ft
1	0.335–0.333	0.656	0.92508
2 Short	0.490–0.488	0.750	0.97861
2	0.490–0.488	0.875	0.97861
33	0.563–0.561	1.000	0.76194
6	0.626–0.624	1.000	0.62292
3	0.748–0.746	1.219	0.63898

NOTE:
(1) Jacobs Number.

Table 3M Tapered Spindles, mm

Number [Note (1)]	D_m	L_m	Taper, mm/m
1	8.50–8.46	16.66	77.0900
2 Short	12.44–12.40	19.05	81.5508
2	12.44–12.40	22.23	81.5508
33	14.30–14.25	25.40	63.4950
6	15.90–15.85	25.40	51.9100
3	18.99–18.95	30.96	53.2483

NOTE:
(1) Jacobs Number.

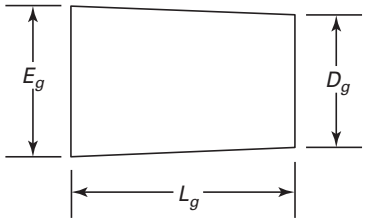

Table 4 Master Plug Gage Dimensions—Jacobs Taper, in.

Number	E_g	D_g	L_g	Taper, in./ft [Note (1)]
1	0.38400	0.33341	0.65625	0.92508
2 Short	0.54880	0.48764	0.75000	0.97861
2	0.55900	0.48764	0.87500	0.97861
33	0.62401	0.56051	1.00000	0.76194
6	0.67600	0.62409	1.00000	0.62292
3	0.81100	0.74610	1.21875	0.63898

NOTE:
(1) Calculated from E_g, D_g, and L_g.

Table 4M Master Plug Gage Dimensions—Jacobs Taper, mm

Number	E_g	D_g	L_g	Taper, mm/m [Note (1)]
1	9.7536	8.4686	16.6688	77.0900
2 Short	13.9395	12.3861	19.0500	81.5508
2	14.1986	12.3861	22.2250	81.5508
33	15.8499	14.2370	25.4000	63.4950
6	17.1704	15.8519	25.4000	51.9100
3	20.5994	18.9509	30.9563	53.2483

NOTE:
(1) Calculated from E_g, D_g, and L_g.

--`,,```,,,,````-`-`,,`,,`,`,,`---

Copyright ASME International
Provided by IHS under license with ASME
No reproduction or networking permitted without license from IHS
Not for Resale

7 HEXAGONAL DRIVES

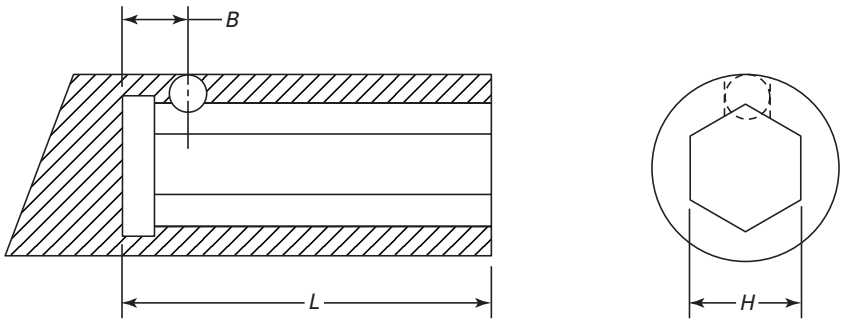

Table 5 Hexagonal Chucks, in.

Nominal Hexagon		H		B,	L,
in.	mm	Max.	Min.	±0.005	Max.
1/4	6.35	0.255	0.253	3/8	15/16
5/16	7.94	0.316	0.314	13/64	1
7/16	11.11	0.444	0.442	17/64	1 1/8
5/8	15.88	0.632	0.630	11/32	1 5/8
3/4	19.05	0.758	0.755	11/32	1 7/8

Table 5M Hexagonal Chucks, mm

Nominal Hexagon		H		B,	L,
mm	in.	Max.	Min.	±0.127	Max.
6.35	1/4	6.47	6.43	9.53	23.81
7.94	5/16	8.02	7.98	5.16	25.40
11.11	7/16	11.27	11.23	6.75	28.57
15.88	5/8	16.05	16.00	8.73	41.27
19.05	3/4	19.25	19.18	8.73	47.62

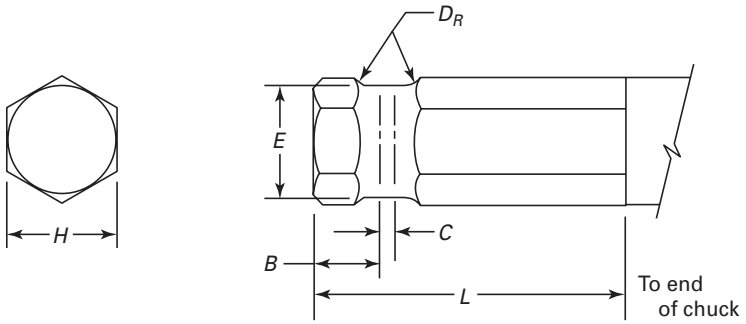

Table 6 Hexagonal Shanks, in.

Nominal Hexagon		H					E,	
in.	mm	Max.	Min.	B	C	D_R	Dia.	L
1/4	6.35	0.250	0.248	11/32	1/16	3/32	3/16	1
5/16	7.94	0.312	0.310	3/16	3/64	3/32	1/4	1 1/16
7/16	11.11	0.4375	0.435	1/4	1/32	7/64	11/32	1 1/4
5/8	15.88	0.625	0.622	5/16	1/16	5/32	17/32	1 3/4
3/4	19.05	0.750	0.747	5/16	1/16	5/32	21/32	2

Table 6M Hexagonal Shanks, mm

Nominal Hexagon		H					E,	
mm	in.	Max.	Min.	B	C	D_R	Dia.	L
6.35	1/4	6.35	6.30	8.73	1.59	2.38	4.76	25.40
7.94	5/16	7.92	7.87	4.76	1.19	2.38	6.35	26.99
11.11	7/16	11.11	11.05	6.35	0.79	2.78	8.73	31.75
15.88	5/8	15.87	15.80	7.94	1.59	3.97	13.49	44.45
19.05	3/4	19.05	18.97	7.94	1.59	3.97	16.67	50.80

Copyright ASME International
Provided by IHS under license with ASME
No reproduction or networking permitted without license from IHS
Not for Resale

8 SQUARE DRIVES

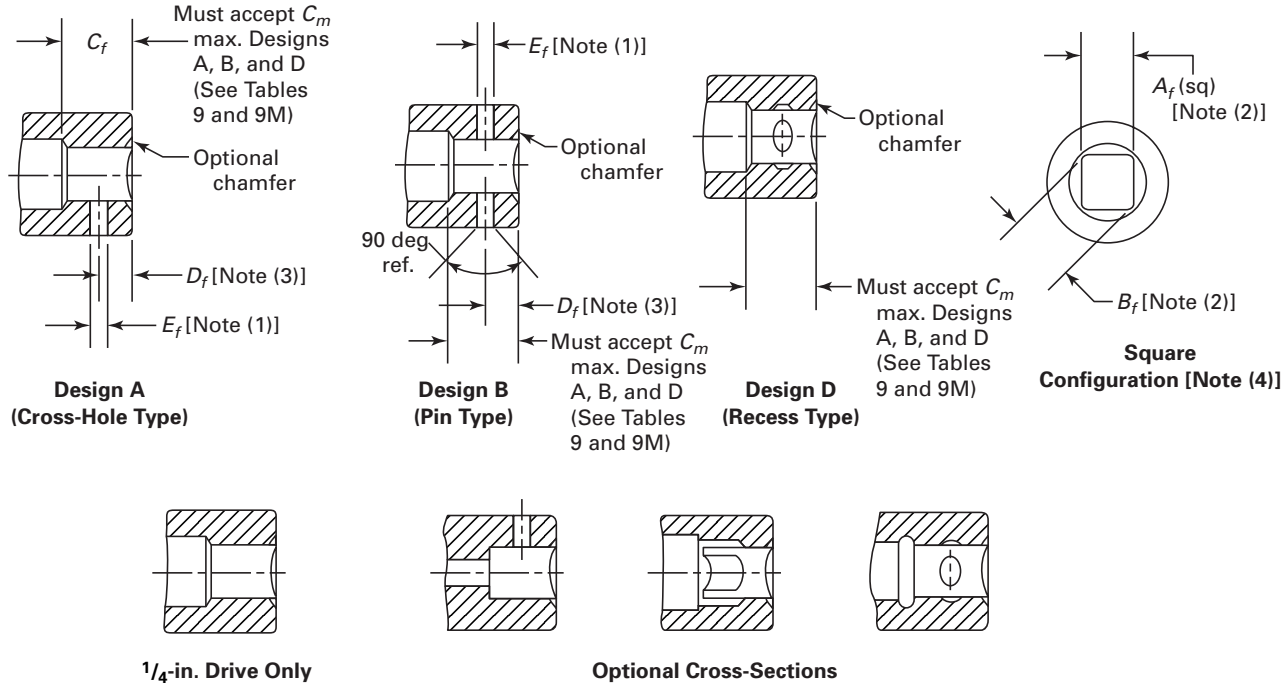

1/4-in. Drive Only **Optional Cross-Sections**

GENERAL NOTE: Design C is not included in Table 7 since it only refers to external squares, ring type.

NOTES:

(1) Neither cross-hole Design A nor Design B, nor recess Design D, is required for 1/4 in. drive internal openings; however, if recessed, Design D must be on four sides.
   (a) Either recess Design D on four sides or cross-hole Design A on one, two, or four sides is required on 3/8 in., 1/2 in., 3/4 in., and 1 in. sizes.
   (b) Cross-hole Design B shall be through two opposite sides.

(2) Square tolerances shall be such as to ensure acceptance when gaged with gages conforming to Table 8 and the figure above it.

(3) D_f max. does not equal D_m min.; however, due to edge radius, plunger diameter, and square dimension interactions, no interference or interchangeability problem exists.

(4) The minimum retention force of recess type, Design D, shall be such as to ensure the holding force specified in Tables 7 and 7M, when tested with weights conforming to Table 11B, the figure above, and Table 11BM.

Fig. 1 Square Drive Specifications for Hand, Power, and Impact Wrenches—Internal End

--`,,```,,,,````-`-`,,`,,`,`,,`---

Copyright ASME International
Provided by IHS under license with ASME
No reproduction or networking permitted without license from IHS
Not for Resale

Table 7 Square Drive Specifications for Hand, Power, and Impact Wrenches—Internal End, in.

Drive Sizes		A_f		B_f,	D_f		E_f		Minimum Force to Retain Square, Design D,
in.	mm	Max.	Min.	Min.	Max.	Min.	Design A, Min.	Design B, Min.	lb
1/4	**6.3**	**0.2603**	**0.2527**	**0.335**	***0.161***	0.136	0.090	0.118	1.5
3/8	10.0	***0.3853***	***0.3777***	0.505	***0.224***	0.199	0.170	0.204	4.0
1/2	12.5	***0.5113***	***0.5027***	0.670	***0.318***	0.293	0.201	***0.220***	6.0
5/8 [Note (1)]	16.0	0.6333	0.6277	0.843	0.318	0.290	. . .	0.250	. . .
3/4	20.0	***0.7613***	***0.7527***	1.005	0.415	0.390	0.216	***0.250***	. . .
1	25.0	1.0125	1.0035	1.350	0.602	0.577	0.234	***0.280***	. . .
1 1/2	40.0	1.5155	***1.5045***	***1.984***	***0.645***	0.620	. . .	***0.377***	. . .
2 1/2	63.0	2.5205	***2.5045***	***3.359***	***1.505***	1.480	. . .	***0.500***	. . .
3 1/2	. . .	3.5205	3.5045	4.702	2.370	2.345	. . .	0.700	. . .

GENERAL NOTES:

(a) Dimensions that are *italic* and **boldface**, sizes 1/4 in. through 1 in., are compatible (will fit) with ISO 1174-1:1996, Part 1 for hand sockets tools.

(b) Dimensions that are *italic* and **boldface**, sizes 1 1/2 in. through 2 1/2 in., are compatible (will fit) with ISO 1174-1:1996, Part 2 for power sockets tools.

NOTE:

(1) Not recommended for new products.

Table 7M Square Drive Specifications for Hand, Power, and Impact Wrenches—Internal End, mm

Drive Sizes		A_f		B_f,	D_f		E_f		Minimum Force to Retain Square, Design D,
mm	in.	Max.	Min.	Min.	Max.	Min.	Design A, Min.	Design B, Min.	kg
6.3	**1/4**	**6.612**	**6.419**	8.51	***4.09***	3.45	2.29	3.00	0.68
10.0	3/8	**9.787**	**9.594**	12.83	5.69	5.05	4.32	5.18	1.81
12.5	1/2	12.987	12.769	17.02	***8.08***	7.44	5.11	5.59	2.72
16.0 [Note (1)]	5/8	16.086	15.944	21.41	8.08	7.37	. . .	6.35	. . .
20.0	3/4	***19.337***	***19.119***	25.53	10.54	9.91	5.49	***6.35***	. . .
25.0	1	***25.718***	***25.489***	34.29	15.29	14.66	5.94	***7.11***	. . .
40.0	1 1/2	38.494	***38.214***	50.39	16.38	15.75	. . .	***8.56***	. . .
63.0	2 1/2	64.021	***63.614***	85.32	38.23	37.59	. . .	***12.70***	. . .
. . .	3 1/2	89.421	89.014	119.43	60.20	59.56	. . .	17.78	. . .

GENERAL NOTES:

(a) Dimensions that are *italic* and **boldface**, sizes 6.3 mm through 25 mm, are compatible (will fit) with ISO 1174-1:1996, Part 1 for hand sockets tools.

(b) Dimensions that are *italic* and **boldface**, sizes 40 mm through 60 mm, are compatible (will fit) with ISO 1174-1:1996, Part 2 for power sockets tools.

NOTE:

(1) Not recommended for new products.

Copyright ASME International
Provided by IHS under license with ASME
No reproduction or networking permitted without license from IHS Not for Resale

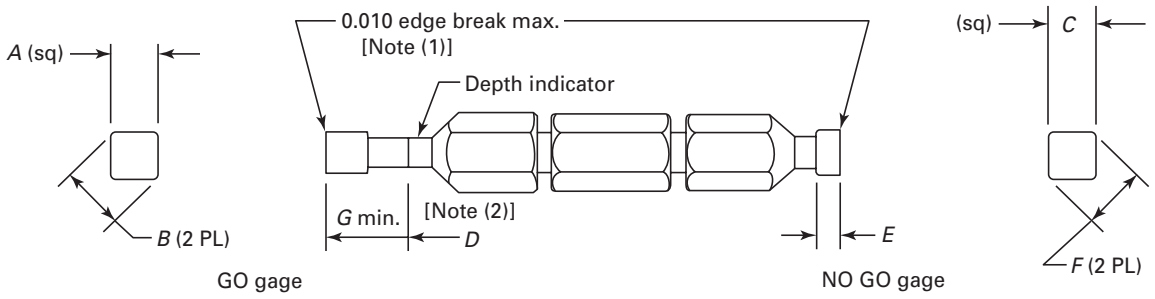

NOTES:
(1) Do not include the length of the chamfer as part of the NO GO gaging procedure. If edge break is more than 0.010 in., the difference must be added to *D*.
(2) *G* min. = a minimum dimension = *A* min. for up to 1 in. or 25 mm.
= 1 in. min. or 25 mm (min.), for *A* greater than 1 in. or 25 mm
If *G* min. is made equal to *D*, then *G* min. can be used as the depth indicator.

Table 8 Square Drive Gage Specifications for Hand, Power, and Impact Wrenches—Internal End, in.

Drive Size		*A* (GO), +0.0002 −0.0000	*B* (GO), +0.0002 −0.0002	*C* (NO GO), +0.0000 −0.0002	*D*, +0.003 −0.000 [Notes (1) and (2)]	*E*, Min.	*F* (NO GO)	
in.	mm						Max.	Min.
1/4	6.3	0.2527	0.3350	0.2603	0.312	0.250	0.3334	0.3301
3/8	10.0	0.3777	0.5050	0.3853	0.438	0.250	0.5039	0.4989
1/2	12.5	0.5027	0.6700	0.5113	0.625	0.250	0.6684	0.6617
5/8	16.0	0.6277	0.8430	0.6333	0.656	0.250	0.8414	0.8330
3/4	20.0	0.7527	1.0050	0.7613	0.938	0.250	1.0034	0.9934
1	25.0	1.0035	1.3500	1.0125	1.125	0.250	1.3484	1.3349
1 1/2	40.0	1.5045	1.9840	1.5155	1.625	0.250	1.9824	1.9626
2 1/2	63.0	2.5045	3.3590	2.5205	2.265	0.250	3.3574	3.3238
3 1/2	. . .	3.5045	4.7020	3.5205	3.265	0.250	4.7004	4.6534

Table 8M Square Drive Gage Specifications for Hand, Power, and Impact Wrenches—Internal End, mm

Drive Size		*A* (GO), +0.005 −0.000	*B* (GO), +0.005 −0.005	*C* (NO GO), +0.000 −0.005	*D*, +0.08 −0.00 [Notes (1) and (2)]	*E*, Min.	*F* (NO GO)	
mm	in.						Max.	Min.
6.3	1/4	6.419	8.509	6.612	7.92	6.35	8.468	8.385
10.0	3/8	9.594	12.827	9.787	11.13	6.35	12.799	12.672
12.5	1/2	12.769	17.018	12.987	15.88	6.35	16.977	16.807
16.0	5/8	15.944	21.412	16.086	16.66	6.35	21.372	21.158
20.0	3/4	19.119	25.527	19.337	23.83	6.35	25.486	25.232
25.0	1	25.489	34.290	25.718	28.58	6.35	34.249	33.906
40.0	1 1/2	38.214	50.394	38.494	41.28	6.35	50.353	49.850
63.0	2 1/2	63.614	85.319	64.021	57.53	6.35	85.278	84.425
. . .	3 1/2	89.014	119.431	89.421	82.93	6.35	119.390	118.196

GENERAL NOTE: Gage tolerances are gage manufacturing tolerances.

NOTES:
(1) Do not include the length of the chamfer as part of the NO GO gaging procedure.
(2) Square drive opening shall accept min. of length *D*.

Copyright ASME International
Provided by IHS under license with ASME
No reproduction or networking permitted without license from IHS
Not for Resale

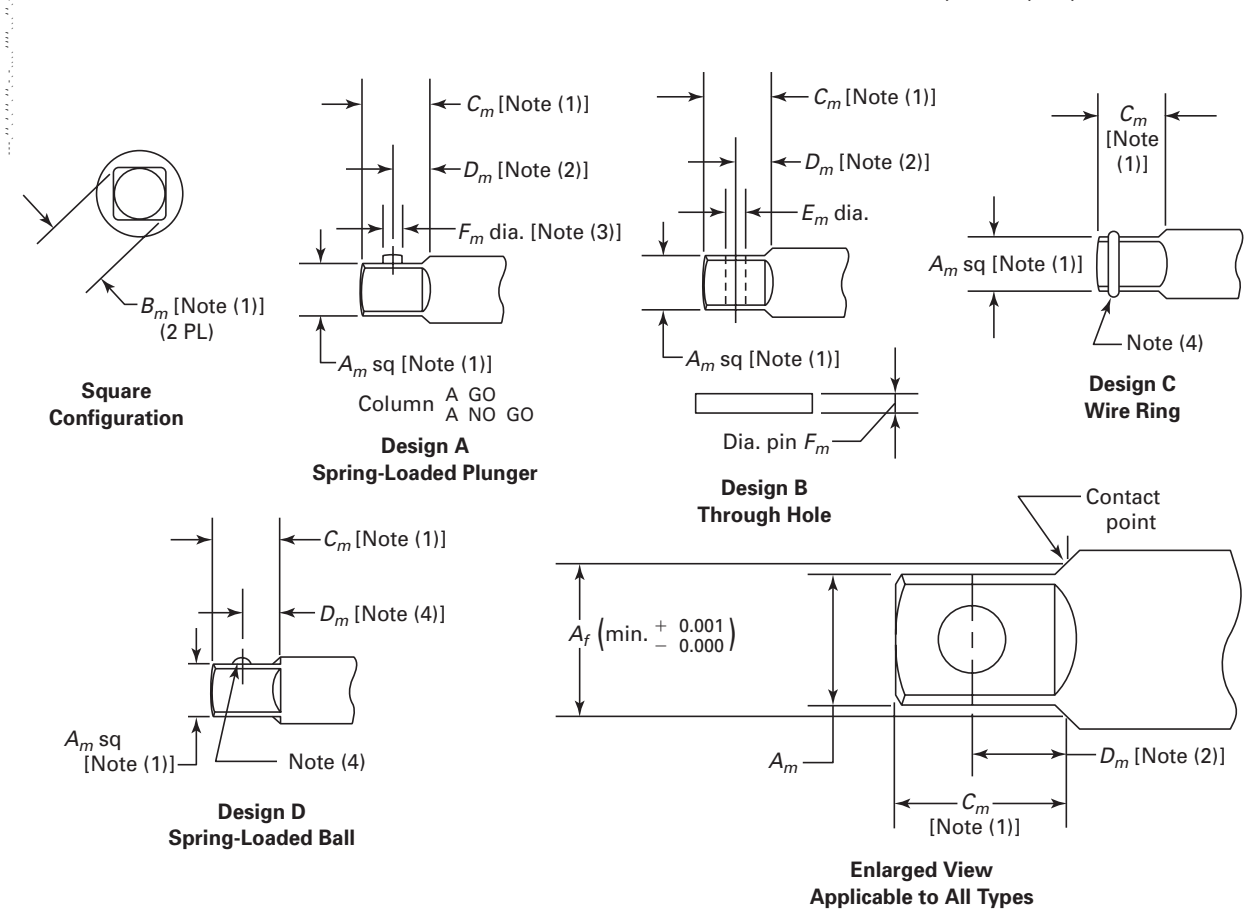

GENERAL NOTES:

(a) D_m min. does not equal D_f max.; however, due to edge radius, plunger diameter, and square dimension interactions, no interference or interchangeability problem exists.

(b) For impact wrenches, A_m should be held as close to maximum as practical.

NOTES:

(1) Square tolerances shall be such as to ensure acceptance when gaged with gages conforming to Tables 10 and 10M.

(2) Dimension D_m tolerance shall be such as to ensure acceptance when gaged with gages conforming to Tables 12 and 12M.

(3) F_m is the diameter of a plunger or pin and does not apply to a spring-loaded ball or ball-shaped plunger or wire ring.

(4) The minimum retention force of the ball or wire ring shall be such as to ensure the holding force of weights conforming to Tables 11A and 11AM.

Fig. 2 Square Drive Specifications for Hand, Power, and Impact Wrenches—External End

Copyright ASME International
Provided by IHS under license with ASME
No reproduction or networking permitted without license from IHS
Not for Resale

Table 9 Square Drive Specifications for Hand, Power, and Impact Wrenches—External End, in.

Drive Size		A_m, All Designs		Maximum B_m, All Designs	C_m Designs A, B, and D		C_m Design C		Minimum D_m, Designs A, B, and D	Minimum E_m, Design B	Maximum F_m, Designs A and B	Minimum Force to Remove Square, lb
in.	mm	Max.	Min.		Max.	Min.	Max.	Min.				
1/4	6.3	0.252	***0.2467***	***0.330***	0.312	0.265	. . .	. . .	***0.156***	. . .	0.078	1.5
3/8	10.0	0.377	***0.3717***	***0.500***	0.438	0.406	0.516	0.482	***0.218***	. . .	0.140	4.0
1/2	12.5	0.502	***0.4967***	***0.665***	0.625	0.531	0.665	0.619	***0.312***	. . .	0.156	6.0
5/8 [Note (1)]	16.0	0.627	0.6217	0.834	0.656	0.594	0.794	0.760	0.322	. . .	0.156	. . .
3/4	20.0	0.752	***0.7467***	***1.000***	0.938	0.750	0.938	0.875	***0.409***	0.250	0.188	10
1	25.0	1.002	***0.9965***	1.340	1.125	1.000	1.170	1.130	***0.596***	0.250	***0.188***	12
1 1/2	40.0	1.503	***1.4975***	***1.968***	1.625	1.562	. . .	. . .	0.641	0.345	0.250	. . .
2 1/2	63.0	***2.500***	2.4845	3.344	2.265	2.234	. . .	. . .	1.515	0.430	0.312	. . .
3 1/2	. . .	3.500	3.4845	4.687	3.265	3.234	. . .	. . .	2.380	0.578	0.500	. . .

GENERAL NOTES:

(a) Dimensions *italicized* and in **bold face** type, sizes 1/4 in. through 1 in., are compatible (will fit) with ISO 1174-1:1996, Part 1 for hand sockets tools.

(b) Dimensions *italicized* and in **bold face** type, sizes 1 1/2 in. through 2 1/2 in., are compatible (will fit) with ISO 1174-1:1996, Part 2 for power sockets tools.

NOTE:

(1) Not recommended for new products.

Table 9M Square Drive Specifications for Hand, Power, and Impact Wrenches—External End, mm

Drive Size		A_m, All Designs		Maximum B_m, All Designs	C_m Designs A, B, and D		C_m Design C		Minimum D_m, Designs A, B, and D	Minimum E_m, Design B	Maximum F_m, Designs A and B	Minimum Force to Remove Square, kg
mm	in.	Max.	Min.		Max.	Min.	Max.	Min.				
6.3	1/4	6.401	***6.266***	***8.38***	7.92	6.73	. . .	. . .	***3.96***	. . .	1.98	0.68
10.0	3/8	9.576	***9.441***	***12.70***	11.13	10.31	13.11	12.24	***5.54***	. . .	3.56	1.81
12.5	1/2	12.751	***12.616***	***16.89***	15.88	13.49	16.89	15.72	***7.92***	. . .	3.96	2.72
16.0 [Note (1)]	5/8	15.926	***15.791***	21.18	16.66	15.09	20.17	19.30	8.18	. . .	3.96	. . .
20.0	3/4	19.101	18.966	***25.40***	23.83	19.05	23.83	22.23	***10.39***	6.35	4.78	4.54
25.0	1	25.451	***25.311***	34.03	28.58	25.40	29.72	28.70	***15.14***	6.35	***4.78***	5.44
40.0	1 1/2	38.176	***38.037***	49.99	41.28	39.67	. . .	. . .	16.28	8.76	6.125	. . .
63.0	2 1/2	***63.500***	63.106	84.94	57.53	56.74	. . .	. . .	38.48	10.92	7.92	. . .
. . .	3 1/2	88.900	88.506	119.05	82.93	82.14	. . .	. . .	60.45	14.68	12.70	. . .

GENERAL NOTES:

(a) Dimensions *italicized* and in **bold face** type, sizes 6.3 mm through 25 mm, are compatible (will fit) with ISO 1174-1:1996, Part 1 for hand sockets tools.

(b) Dimensions *italicized* and in **bold face** type, sizes 40 mm through 60 mm, are compatible (will fit) with ISO 1174-1:1996, Part 2 for power sockets tools.

NOTE:

(1) Not recommended for new products.

--`,,```,,,,````-`-`,,`,,`,`,,`---

Copyright ASME International
Provided by IHS under license with ASME
No reproduction or networking permitted without license from IHS
Not for Resale

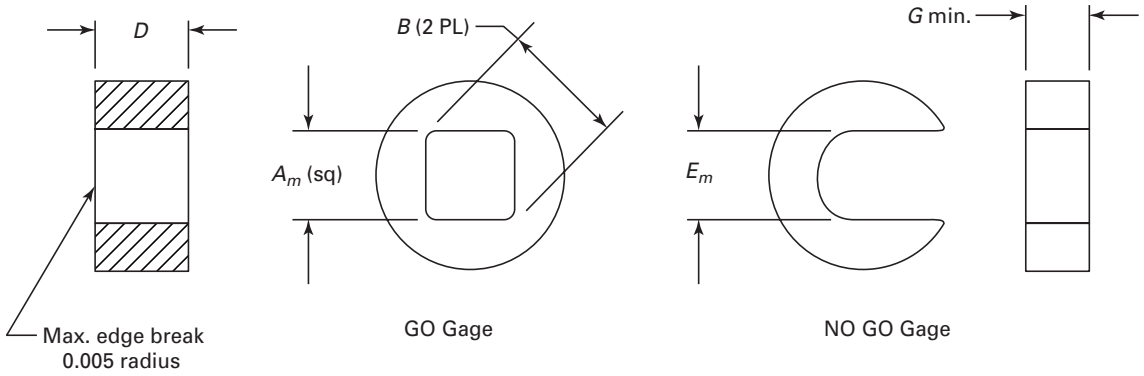

Square Gage

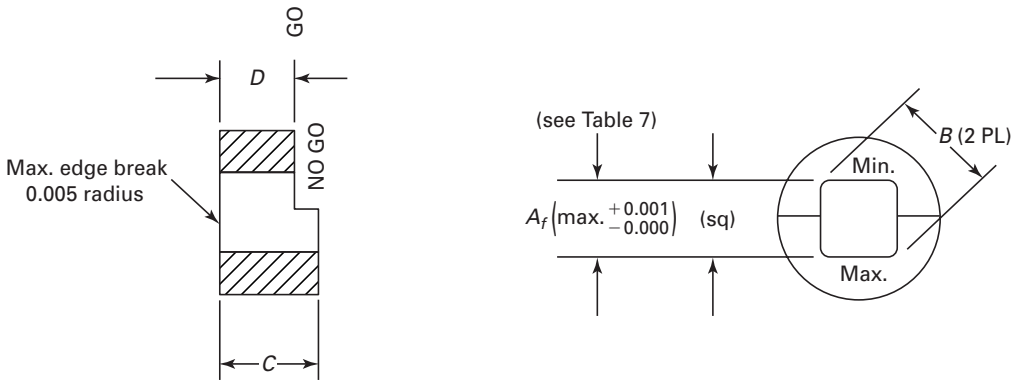

Length Gage

Fig. 3 Square Drive Gage Specifications for Hand, Power, and Impact Wrenches—External End

Copyright ASME International
Provided by IHS under license with ASME
No reproduction or networking permitted without license from IHS
Not for Resale

Table 10 Square Drive Gage Specifications for Hand, Power, and Impact Wrenches—External End, in.

Drive Size		A_m, +0.0000 −0.0002, All Designs	B, +0.0002 −0.0002, All Designs	C, +0.000 −0.001		D, +0.001 −0.000		G Min., Designs A, B, and D	E_m, +0.0002 −0.0000, All Designs
in.	mm			Designs A, B, and D	Design C	Designs A, B, and D	Design C		
1/4	6.3	0.252	0.3300	0.312	. . .	0.265	. . .	0.312	0.2467
3/8	10.0	0.377	0.5000	0.438	0.516	0.406	0.482	0.438	0.3717
1/2	12.5	0.502	0.6650	0.625	0.653	0.531	0.619	0.625	0.4967
5/8	16.0	0.627	0.8340	0.656	0.794	0.594	0.760	0.656	0.6217
3/4	20.0	0.752	1.0000	0.938	0.915	0.750	0.875	0.938	0.7467
1	25.0	1.002	1.3400	1.125	1.170	1.000	1.130	1.125	0.9965
1 1/2	40.0	1.503	1.9680	1.625	. . .	1.562	. . .	1.625	1.4975
2 1/2	63.0	2.500	3.3440	2.265	. . .	2.234	. . .	2.265	2.4845
3 1/2	. . .	3.500	4.6870	3.265	. . .	3.234	. . .	3.265	3.4845

GENERAL NOTES:
(a) NO GO gage must be used by rotating gage 90 deg to check both sets of across flat dimensions.
(b) Gage tolerances are tool makers' gage manufacturing tolerances.

Table 10M Square Drive Gage Specifications for Hand, Power, and Impact Wrenches—External End, mm

Drive Size		A_m, +0.000 −0.005, All Designs	B, +0.005 −0.005, All Designs	C, +0.00 −0.03		D, +0.03 −0.00		G Min., Designs A, B, and D	E_m, +0.005 −0.000, All Designs
mm	in.			Designs A, B, and D	Design C	Designs A, B, and D	Design C		
6.3	1/4	6.401	8.38	7.92	. . .	6.73	. . .	7.92	6.266
10.0	3/8	9.576	12.70	11.13	13.11	10.31	12.24	11.13	9.441
12.5	1/2	12.751	16.89	15.88	16.59	13.49	15.72	15.88	12.616
16.0	5/8	15.926	21.18	16.66	20.17	15.09	19.30	16.66	15.791
20.0	3/4	19.101	25.40	23.83	23.24	19.05	22.23	23.83	18.966
25.0	1	25.451	34.04	28.58	29.72	25.40	28.70	28.58	25.311
40.0	1 1/2	38.176	49.99	41.28	. . .	39.67	. . .	41.28	38.037
63.0	2 1/2	63.500	84.94	57.53	. . .	56.74	. . .	57.53	63.106
. . .	3 1/2	88.900	119.05	82.93	. . .	82.14	. . .	82.93	88.506

GENERAL NOTES:
(a) NO GO gage must be used by rotating gage 90 deg to check both sets of across flat dimensions.
(b) Gage tolerances are tool makers' gage manufacturing tolerances.

--`,,```,,,,````-`-`,,`,,`,`,,`---
Copyright ASME International
Provided by IHS under license with ASME
No reproduction or networking permitted without license from IHS
Not for Resale

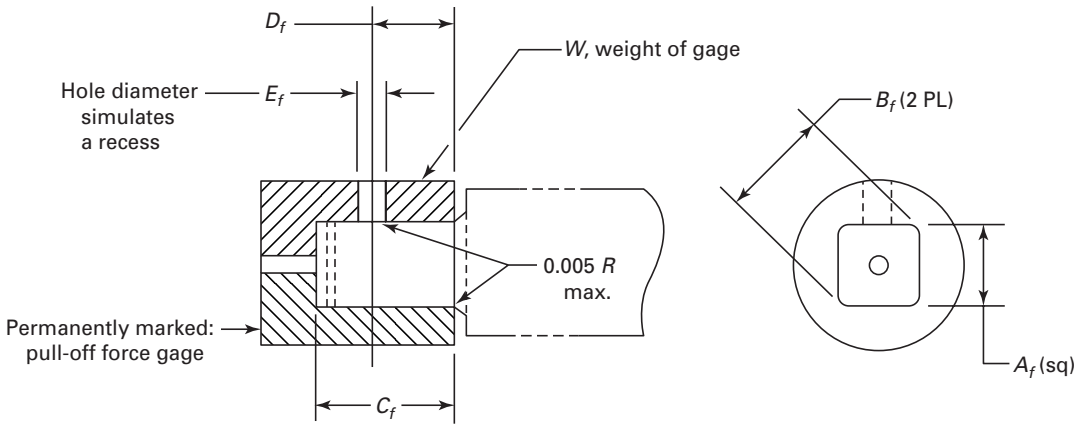

Table 11A Square Drive Pull-off Force Gage Specifications for Designs C and D Hand, Power, and Impact Wrenches—External End, in.

Drive Size		A_f +0.0010 −0.0000	B_f +0.005 −0.000	C_f +0.025 −0.000	D_f +0.000 −0.002	E_f +0.000 −0.002	Total Weight of Gage, W, lb	
in.	mm						Max.	Min.
1/4	6.3	0.2603	0.335	0.312	0.161	. . .	1.58	1.5
3/8	10.0	0.3853	0.505	0.438	0.224	0.076	4.20	4.0
1/2	12.5	0.5113	0.670	0.625	0.318	0.110	6.30	6.0
3/4	20.0	0.7613	1.005	0.938	0.415	0.216	10.50	10.0
1	25.0	1.0125	1.350	1.125	0.602	0.234	12.60	12.0

Table 11AM Square Drive Pull-off Force Gage Specifications for Designs C and D Hand, Power, and Impact Wrenches—External End, mm

Drive Size		A_f +0.020 −0.000	B_f +0.13 −0.00	C_f +0.64 −0.00	D_f +0.00 −0.05	E_f +0.000 −0.002	Total Weight of Gage, W, kg	
mm	in.						Max.	Min.
6.3	1/4	6.612	8.51	7.92	4.08	. . .	0.71	0.68
10.0	3/8	9.787	12.83	11.13	5.68	1.93	1.90	1.81
12.5	1/2	12.987	17.02	15.88	8.07	2.78	2.86	2.72
20.0	3/4	19.337	25.53	23.83	10.54	5.49	4.77	4.54
25.0	1	25.718	34.29	28.58	15.29	5.94	5.71	5.44

GENERAL NOTES:

(a) The C_m of the product being gaged must pass the Fig. 3 length gage, prior to pull-off force gaging.

(b) While retaining the gage, the square drive shall be lifted gradually in a vertical manner, avoiding any side loads.

(c) The above gage simulates the worst-case condition of an internal square to test the pull-off force retention of an external square of Design C (wire) and Design D (ball).

--`,,```,,,,````-`-`,,`,,`,`,,`---

Copyright ASME International
Provided by IHS under license with ASME
No reproduction or networking permitted without license from IHS

Not for Resale

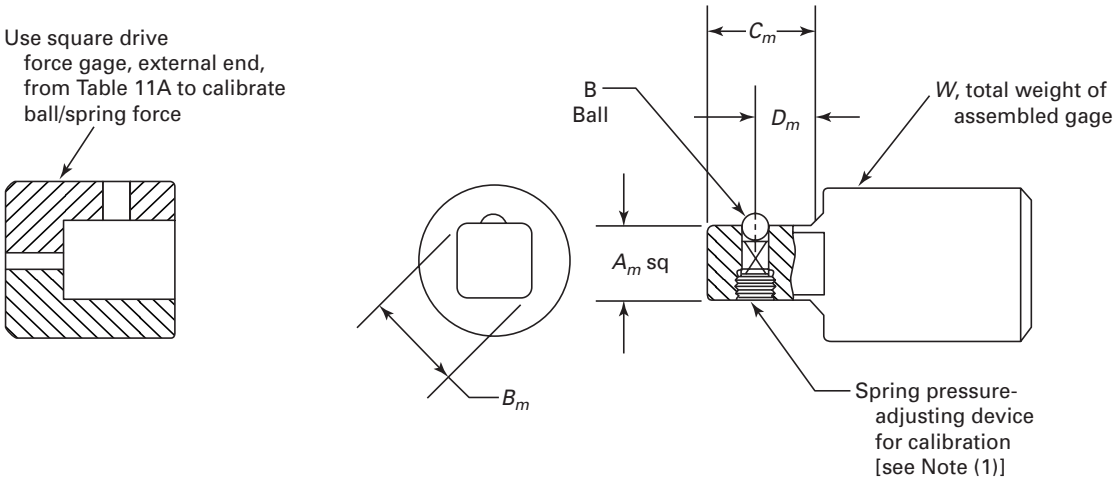

Table 11B Square Drive Retention Force Gage Specifications for Design D (Recess Type) Hand, Power, and Impact Wrenches—Internal End, in.

Drive Size		A_m		B_m,	C_m		D_m,	Ball Size, B	Total Weight of Gage, W, lb	
in.	mm	Max.	Min.	Max.	Max.	Min.	Min.	±0.005	Max.	Min.
1/4	6.3	0.252	0.2467	0.330	0.312	0.265	0.156	0.125	1.58	1.5
3/8	10.0	0.377	0.3717	0.500	0.438	0.406	0.218	0.187	4.20	4.0
1/2	12.5	0.502	0.4967	0.663	0.625	0.531	0.312	0.250	6.30	6.0

GENERAL NOTES:

(a) Square drive shall be lifted gradually in a vertical manner, avoiding any side loads, while retaining the gage.

(b) Design D (internal type recess) is generally not used on drive sizes larger than 1/2.

NOTE:

(1) Use the corresponding drive size force gage from Table 11A to calibrate the retention force of the ball and spring.

Table 11BM Square Drive Retention Force Gage Specifications for Design D (Recess Type) Hand, Power, and Impact Wrenches—Internal End, mm

Drive Size		A_m		B_m,	C_m		D_m,	Ball Size, B	Total Weight of Gage, W, kg	
mm	in.	Max.	Min.	Max.	Max.	Min.	Min.	±1.27	Max.	Min.
6.3	1/4	6.401	6.266	8.38	7.92	6.73	3.96	3.17	0.71	0.68
10.0	3/8	9.576	9.441	12.70	11.13	10.31	5.54	4.75	1.90	1.81
12.5	1/2	12.751	12.616	16.89	15.88	13.49	7.92	6.35	2.86	2.72

GENERAL NOTES:

(a) Square drive shall be lifted gradually in a vertical manner, avoiding any side loads, while retaining the gage.

(b) Design D (internal type recess) is generally not used on drive sizes larger than 12.5.

NOTE:

(1) Use the corresponding drive size force gage from Table 11AM to calibrate the retention force of the ball and spring.

Copyright ASME International
Provided by IHS under license with ASME
No reproduction or networking permitted without license from IHS
Not for Resale

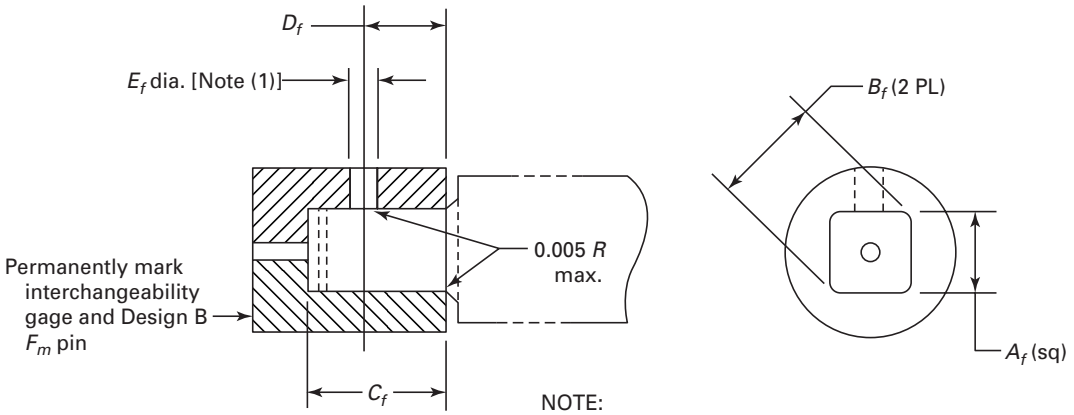

NOTE:
(1) E_f will be through both sides for Design B.

Table 12 Square Drive Interchangeability Gage Specifications for Designs A and B Hand, Power, and Impact Wrenches—External End, in.

Drive Size		A_f, +0.0010 −0.0000	B_f, +0.005 −0.000	C_f, +0.025 −0.000	D_f, +0.000 −0.002	E_f, +0.000 −0.002		Maximum F_m Pin, +0.0005 −0.0000, Design B
in.	mm					Design A, Min.	Design B, Min.	
1/4	6.3	0.2527	0.335	0.312	0.161	0.090	0.118	0.078
3/8	10.0	0.3777	0.505	0.438	0.224	0.170	0.204	0.140
1/2	12.5	0.5027	0.670	0.625	0.318	0.201	0.220	0.156
5/8	16.0	0.6277	0.843	0.656	0.318	. . .	0.250	0.156
3/4	20.0	0.7527	1.005	0.938	0.415	0.216	0.250	0.188
1	25.0	1.0035	1.350	1.125	0.602	0.234	0.280	0.188
1 1/2	40.0	1.5045	1.984	1.625	0.645	. . .	0.337	0.250
2 1/2	63.0	2.5045	3.359	2.265	1.505	. . .	0.500	0.312
3 1/2	89.0	3.5045	4.702	3.265	2.370	. . .	0.700	0.500

Table 12M Square Drive Interchangeability Gage Specifications for Designs A and B Hand, Power, and Impact Wrenches—External End, mm

Drive Size		A_f, +0.020 −0.000	B_f, +0.13 −0.00	C_f, +0.64 −0.00	D_f, +0.00 −0.05	E_f, +0.00 −0.05		Maximum F_m Pin, +0.013 −0.000, Design B
mm	in.					Design A, Min.	Design B, Min.	
6.3	1/4	6.419	8.51	7.92	4.09	2.29	3.00	1.98
10.0	3/8	9.594	12.83	11.12	5.69	4.32	5.18	3.55
12.5	1/2	12.769	17.02	15.87	8.08	5.11	5.59	3.96
16.0	5/8	15.944	21.41	16.66	8.08	. . .	6.35	3.96
20.0	3/4	19.119	25.53	23.82	10.54	5.49	6.35	4.77
25.0	1	25.489	34.29	28.57	15.29	5.94	7.11	4.77
40.0	1 1/2	38.214	50.39	41.27	16.38	. . .	8.56	6.35
63.0	2 1/2	63.614	85.32	57.53	38.23	. . .	12.70	7.92
89.0	3 1/2	89.014	119.43	82.93	60.20	. . .	17.78	12.70

GENERAL NOTES:
(a) The C_m of the product being gaged must pass the Fig. 3 length gage, prior to pull-off force gaging.
(b) The above gage simulates the worst-case condition of an internal square to test the interchangeability of an external square of Design A (plunger) and Design B (pin).
(c) Product to be oriented to engage plunger or pin into E_f diameter of gage.

--`,,```,,,,````-`-`,,`,,`,`,,`---

Copyright ASME International
Provided by IHS under license with ASME
No reproduction or networking permitted without license from IHS Not for Resale

9 SPLINE DRIVES

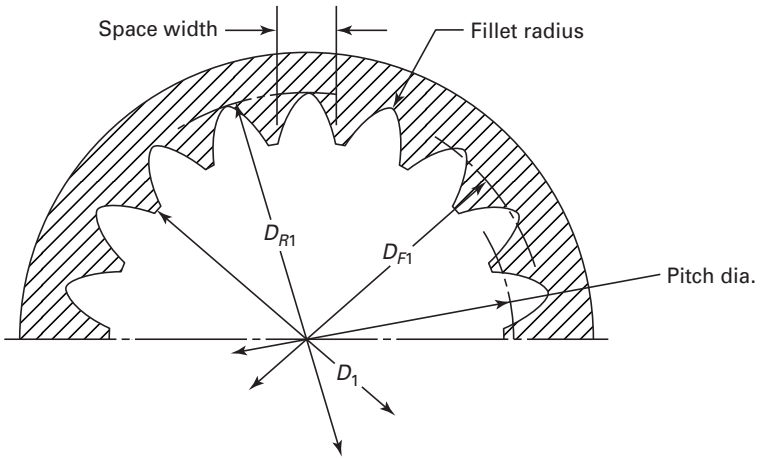

Table 13 Spline Drives—Internal Spline Proportions, in.

Drive Size Number	Nominal Size	Number of Teeth	Module	Press Angle, deg	Pitch Dia.	Major Dia., D_{R1}		Form Dia., D_{F1}	Minor Dia., D_1		Fillet Radius	Space Width	
						Max.	Min.		Max.	Min.		Max. Act	Min. Eff
1	13.77	12	1.0583/0.5292	30	12.700	14.833	14.605	13.861	11.767	11.641	0.23	1.722	1.661
2	16.51	12	1.2700/0.6350	30	15.240	17.780	17.526	16.612	14.097	13.970	0.30	2.059	1.994
2A	19.05	14	1.2700/0.6350	30	17.780	20.320	20.066	19.152	16.637	16.510	0.33	2.062	1.994
3	23.83	14	1.5875/0.7938	30	22.225	25.361	25.083	23.914	20.789	20.638	0.43	2.562	2.494
4	31.75	14	2.1167/1.0583	30	29.634	33.774	33.444	31.852	27.693	27.516	0.64	3.398	3.325
5 [Note (1)]	41.28	14	2.5400/2.1167	20	35.560	42.799	42.418	41.549	34.594	34.341	1.40	5.118	5.030
5A	48.26	18	2.5400/1.2700	30	45.720	50.673	50.292	48.362	43.434	43.180	0.84	4.066	3.990
6	60.33	18	3.1750/1.5875	30	57.150	63.322	62.865	60.439	54.279	53.975	1.04	5.067	4.986

NOTE:
(1) Size 5 prescribes proportions in common use for splined socket drives. Other splines conform to ANSI B92.1-1996 for fillet root, side fit, Class 1 (except the minor diameter maximum dimension, D_1 max. for sizes 3, 4, 5A, and 6).

Table 13M Spline Drives—Internal Spline Proportions, mm

Drive Size Number	Nominal Size	Number of Teeth	Pitch	Press Angle, deg	Pitch Dia.	Major Dia., D_{R1}		Form Dia., D_{F1}	Minor Dia., D_1		Fillet Radius	Space Width	
						Max.	Min.		Max.	Min.		Max. Act	Min. Eff
1	0.542	12	$^{24}/_{48}$	30	0.5000	0.5840	0.5750	0.5457	0.4633	0.4583	0.009	0.0678	0.0654
2	0.6500	12	$^{20}/_{40}$	30	0.6000	0.7000	0.6900	0.6540	0.5550	0.5500	0.012	0.0811	0.0785
2A	0.7500	14	$^{20}/_{40}$	30	0.7000	0.8000	0.7900	0.7540	0.6550	0.6500	0.013	0.0812	0.0785
3	0.938	14	$^{16}/_{32}$	30	0.8750	0.9985	0.9875	0.9415	0.8185	0.8125	0.017	0.1009	0.0982
4	1.2500	14	$^{12}/_{24}$	30	1.1667	1.3297	1.3167	1.2540	1.0903	1.0833	0.025	0.1338	0.1309
5 [Note (1)]	1.6250	14	$^{10}/_{12}$	20	1.4000	1.6850	1.6700	1.6358	1.3620	1.3520	0.055	0.2015	0.1980
5A	1.9000	18	$^{10}/_{20}$	30	1.8000	1.9950	1.9800	1.9040	1.7100	1.7000	0.033	0.1601	0.1571
6	2.3750	18	$^{8}/_{16}$	30	2.2500	2.4930	2.4750	2.3795	2.1370	2.1250	0.041	0.1995	0.1963

NOTE:
(1) Size 5 prescribes proportions in common use for splined socket drives. Other splines conform to ANSI B92.1-1996 for fillet root, side fit, Class 1 (except the minor diameter maximum dimension, D_1 max. for sizes 3, 4, 5A, and 6).

Copyright ASME International
Provided by IHS under license with ASME
No reproduction or networking permitted without license from IHS
Not for Resale

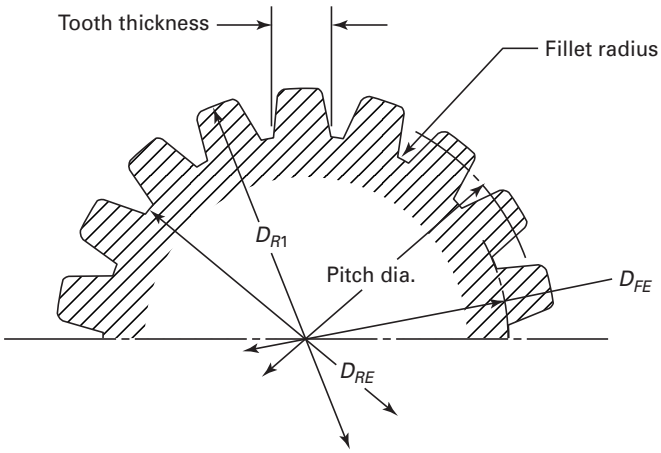

Table 14 Spline Drives—External Spline Proportions, in.

Drive Size Number	Nominal Size	Number of Teeth	Pitch	Press Angle, deg	Pitch Dia.	Major Dia., D_{R1}		Form Dia., D_{FE}	Minor Dia., D_{RE}		Fillet Radius	Tooth Thickness	
						Max.	Min.		Max.	Min.		Max. Eff	Min. Act
1	0.542	12	$^{24}/_{48}$	30	0.5000	0.5417	0.5367	0.4543	0.4167	0.4077	0.018	0.0639	0.0615
2	0.650	12	$^{20}/_{40}$	30	0.6000	0.6500	0.6450	0.5460	0.5000	0.4900	0.021	0.0770	0.0744
2A	0.750	14	$^{20}/_{40}$	30	0.7000	0.7500	0.7450	0.6460	0.6000	0.5900	0.020	0.0770	0.0743
3	0.938	14	$^{16}/_{32}$	30	0.8750	0.9375	0.9325	0.8085	0.7500	0.7390	0.025	0.0967	0.0940
4	1.250	14	$^{12}/_{24}$	30	1.1667	1.2500	1.2450	1.0793	1.0167	1.0037	0.038	0.1294	0.1265
5 [Note (1)]	1.625	14	$^{10}/_{12}$	20	1.4000	1.6150	1.6110	1.3156	1.2500	1.2350	0.050	0.1950	0.1900
5A	1.900	18	$^{10}/_{20}$	30	1.8000	1.9000	1.8950	1.6950	1.6200	1.6150	0.044	0.1556	0.1526
6	2.375	18	$^{8}/_{16}$	30	2.2500	2.3750	2.3700	2.1205	2.0250	2.0070	0.055	0.1948	0.1915

NOTE:
(1) Size 5 prescribes proportions in common use for splined socket drives. Other splines conform to ANSI B92.1-1996 for fillet root, side fit, Class 1.

Table 14M Spline Drives—External Spline Proportions, mm

Drive Size Number	Nominal Size	Number of Teeth	Module	Press Angle, deg	Pitch Dia.	Major Dia., D_{R1}		Form Dia., D_{FE}	Minor Dia., D_{RE}		Fillet Radius	Tooth Thickness	
						Max.	Min.		Max.	Min.		Max. Eff	Min. Act
1	13.77	12	1.0583/0.5292	30	12.700	13.759	13.632	11.539	10.584	10.356	0.46	1.623	1.562
2	16.51	12	1.2700/0.6350	30	15.240	16.510	16.383	13.868	12.700	12.446	0.53	1.955	1.890
2A	19.05	14	1.2700/0.6350	30	17.780	19.050	18.923	16.408	15.240	14.986	0.51	1.955	1.887
3	23.83	14	1.5875/0.7938	30	22.225	23.812	23.686	20.536	19.050	18.771	0.64	2.456	2.388
4	31.75	14	2.1167/1.0583	30	29.634	31.750	31.623	27.414	25.824	25.494	0.97	3.286	3.213
5 [Note (1)]	41.28	14	2.5400/2.1167	20	35.560	41.021	40.919	33.416	31.750	31.369	1.27	4.953	4.826
5A	48.26	18	2.5400/1.2700	30	45.720	48.260	48.133	43.078	41.148	41.020	1.12	3.952	3.876
6	60.33	18	3.1750/1.5875	30	57.150	60.325	60.198	53.861	51.435	50.978	1.40	4.947	4.864

NOTE:
(1) Size 5 prescribes proportions in common use for splined socket drives. Other splines conform to ANSI B92.1-1996 for fillet root, side fit, Class 1.

Copyright ASME International
Provided by IHS under license with ASME
No reproduction or networking permitted without license from IHS
Not for Resale

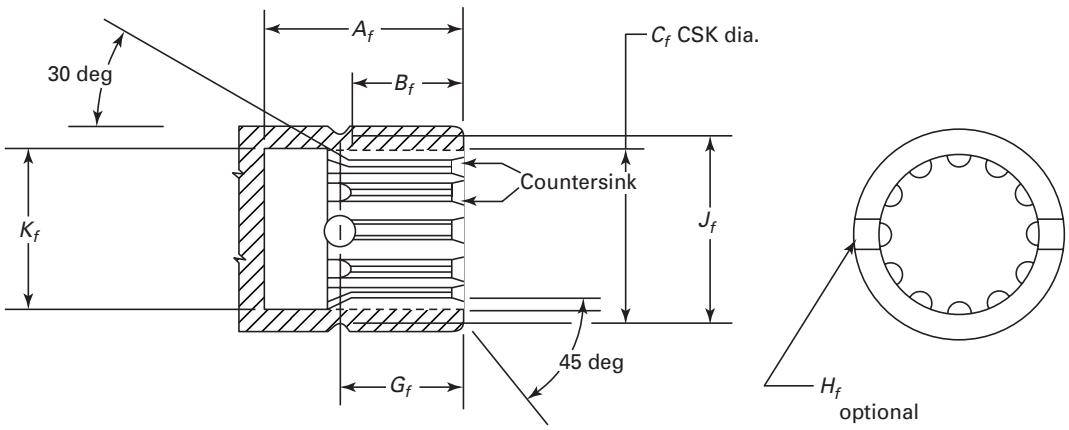

GENERAL NOTES:
(a) Hole H_f must be oriented on the centerline of a tooth (as shown) for all sizes except Size 5. Hole H_f must be oriented on the centerline of a tooth space for Size 5 only.
(b) The proportions of the internal drive shall permit entry of a comparably sized external drive end, conforming to Table 21 of this Standard, to a depth equal to dimension A_f.
(c) The 30 deg angle forward of the spline shall extend to the major diameter of the spline.

Table 15 Spline Drives—Internal Mounting Dimensions, in.

Drive Size Number	A_f, Min.	B_f, Max.	C_f, $\pm 1/64$	G_f, ± 0.006	H_f, $+1/32$ -0	J_f, $+1/16$ -0	K_f, Min.
1	0.656	0.375	$35/64$	0.468	$3/16$	. . .	0.5417
2	0.937	0.562	$21/32$	0.672	$7/32$	. . .	0.6500
2A	1.094	0.625	$3/4$	0.750	$7/32$	$1\,1/8$	0.7500
3	1.312	0.687	$15/16$	0.844	$5/16$	$1\,3/8$	0.9375
4	1.500	0.750	$1\,1/4$	0.953	$3/8$	$1\,11/16$	1.2500
5	1.875	0.906	$1\,5/8$	0.625	$5/16$	$2\,1/16$	1.6150
5A	2.060	1.010	$2\,1/32$	1.250	$15/32$	$2\,11/32$	1.9000
6	2.125	1.094	$2\,3/8$	1.328	$1/2$	$3\,3/16$	2.3750

Table 15M Spline Drives—Internal Mounting Dimensions, mm

Drive Size Number	A_f, Min.	B_f, Max.	C_f, ± 0.396	G_f, ± 0.15	H_f, $+0.79$ -0.00	J_f, $+1.58$ -0.00	K_f, Min.
1	16.66	9.52	13.89	11.89	4.76	. . .	13.759
2	23.80	14.27	16.67	17.07	5.56	. . .	16.510
2A	27.79	15.87	19.05	19.05	5.56	28.58	19.050
3	33.32	17.44	23.81	21.44	7.94	34.93	23.813
4	38.10	19.05	31.75	24.21	9.53	42.86	31.750
5	47.63	23.01	41.28	15.88	7.94	52.39	41.021
5A	52.32	25.65	51.59	31.75	11.91	59.53	48.260
6	53.98	27.79	60.33	33.73	12.70	80.96	60.325

Copyright ASME International
Provided by IHS under license with ASME
No reproduction or networking permitted without license from IHS
Not for Resale

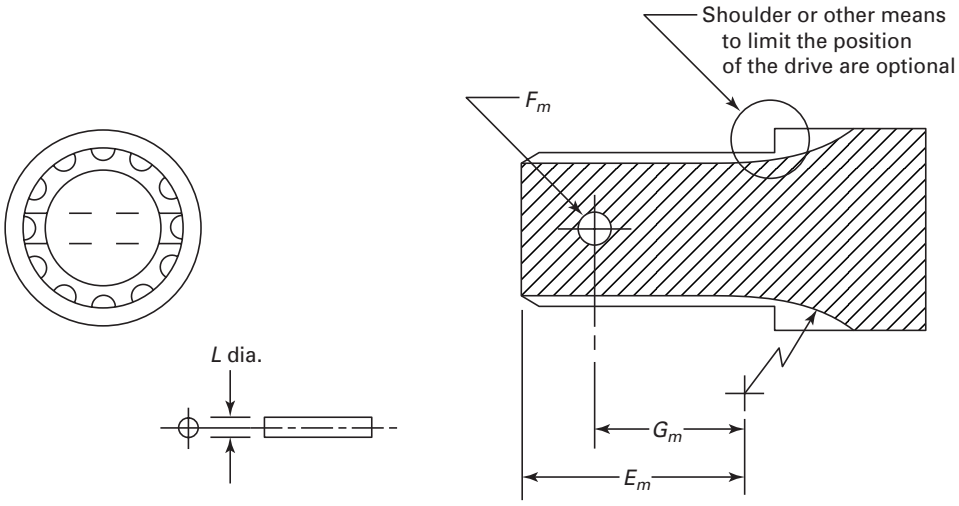

GENERAL NOTES:
(a) Hole F_m must be oriented on the centerline of a tooth space (as shown) for all sizes except Size 5.
(b) Hole F_m must be oriented on a centerline of a tooth space for Size 5 ONLY. External drive ends shall provide means to retain internal drive ends which conform to Table 20 of this Standard.
(c) Hole F_m must be deleted when other means are employed.

Table 16 Spline Drives—External Mounting Dimensions, in.

Drive Size Number	E_m, Max.	F_m, Min.	G_m, ±0.006	Maximum Dia., L
1	0.656	$^{9}/_{64}$	0.468	$^{1}/_{8}$
2	0.937	$^{11}/_{64}$	0.672	$^{5}/_{32}$
2A	1.094	$^{11}/_{64}$	0.750	$^{5}/_{32}$
3	1.312	$^{7}/_{32}$	0.844	$^{3}/_{16}$
4	1.500	$^{9}/_{32}$	0.953	$^{1}/_{4}$
5	1.875	$^{5}/_{16}$	0.625	$^{1}/_{4}$
5A	2.060	$^{11}/_{32}$	1.250	$^{5}/_{16}$
6	2.125	$^{13}/_{32}$	1.328	$^{3}/_{8}$

Table 16M Spline Drives—External Mounting Dimensions, mm

Drive Size Number	E_m, Max.	F_m, Min.	G_m, ±0.152	Maximum Dia., L
1	16.66	3.57	11.89	3.17
2	23.80	4.37	17.07	3.96
2A	27.78	4.37	19.05	3.96
3	33.32	5.56	21.44	4.76
4	38.10	7.14	24.21	6.35
5	47.62	7.94	15.88	6.35
5A	52.32	8.73	31.75	7.93
6	53.97	10.32	33.73	9.52

--`,,```,,,,````-`-`,,`,,`,`,,`---
Copyright ASME International
Provided by IHS under license with ASME
No reproduction or networking permitted without license from IHS
Not for Resale

10 ABRASION TOOL SPINDLES

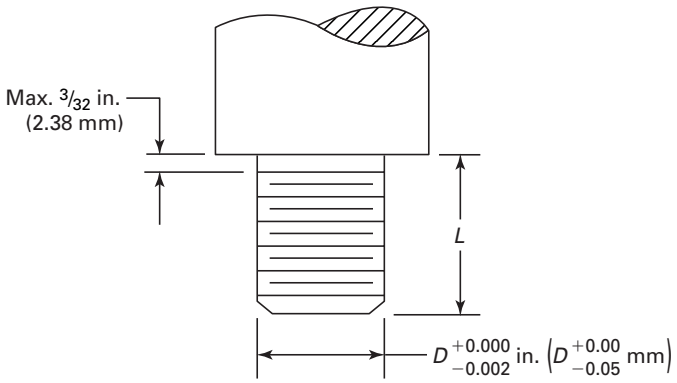

Table 17 Sanders and Polishers

D		*L*, in.		*L*, mm	
5/8–11	UNC-2A	15/16	+0 −1/16	23.81	+0.00 −1.58

GENERAL NOTES:
(a) Not suited for use with grinding wheels.
(b) Threads right hand.

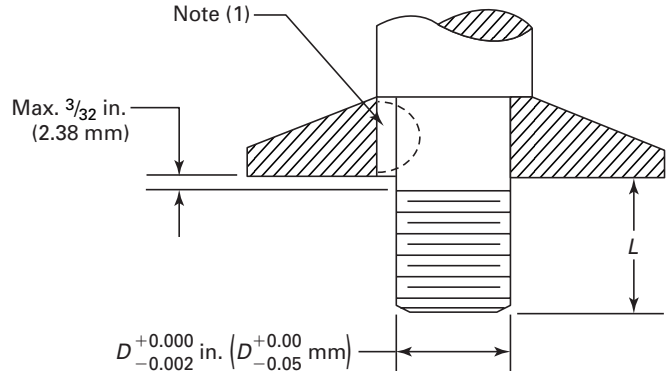

Table 18 Vertical and Angle Grinders for Unthreaded Wheels

Wheel Dia., *D*		Maximum *L*, in.	Maximum *L*, mm
Over 5 in.	5 in. and Under		
5/8–11 UNC-2A	5/8–11 UNC-2A through 3/8–24	1 1/2	38.10

GENERAL NOTES:
(a) See ANSI B7.1-2000 for proper flange diameters.
(b) Threads right hand.

NOTE:
(1) Driven flange for wheels over 5-in. dia.

Copyright ASME International
Provided by IHS under license with ASME
No reproduction or networking permitted without license from IHS
Not for Resale

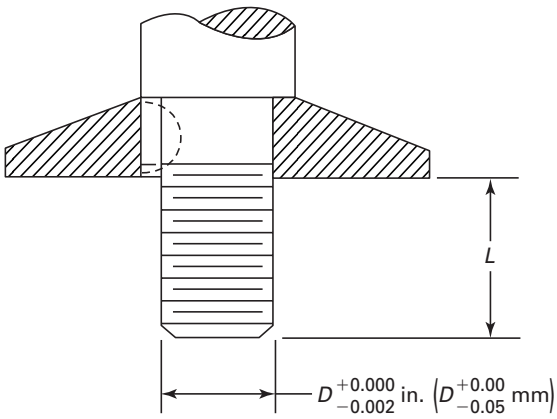

Separate Flange

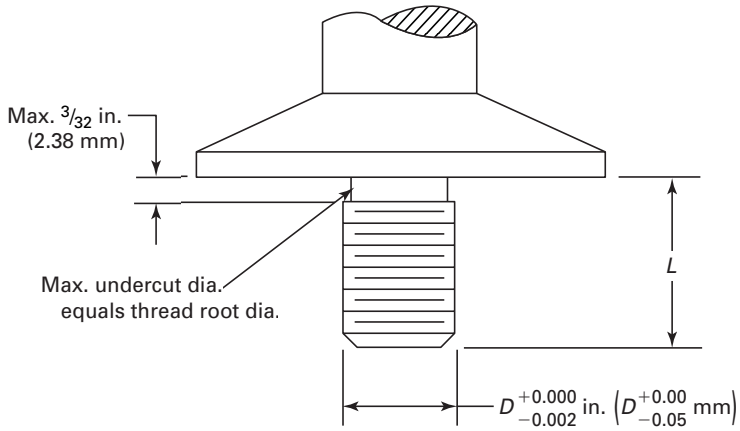

Integral Flange

Table 19 Vertical and Angle Grinders for Threaded Wheels

D	*L*, in.	*L*, mm
5/8–11 UNC-2A	15/16	23.81

GENERAL NOTE: See ANSI B7.1-2000 for proper flange diameters.

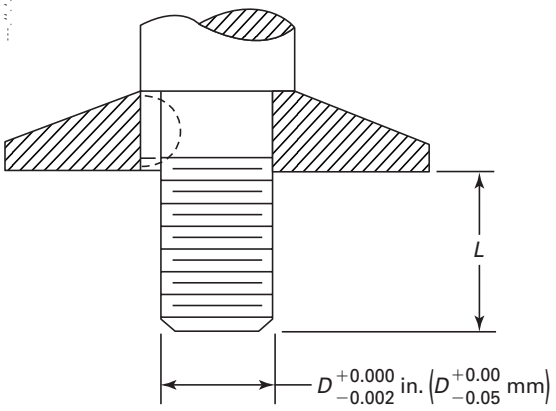

Separate Flange

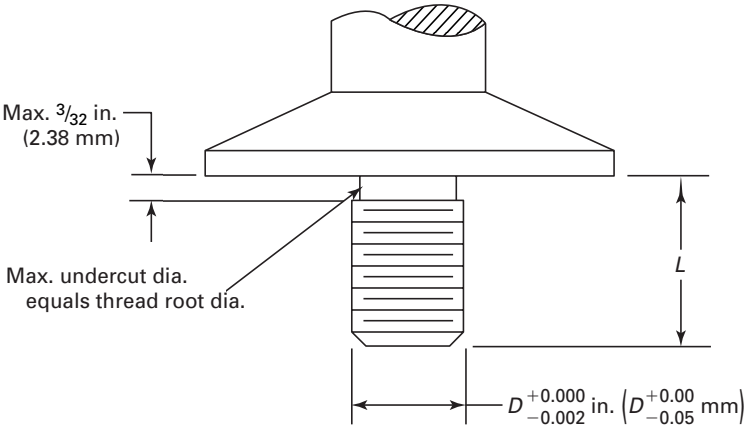

Integral Flange

Table 20 Cone Wheel Grinders

D	*L*, in.	*L*, mm
3/8–24 UNF-2A	9/16	14.29
1/2–13 UNC-2A	11/16	17.46
5/8–11 UNC-2A	15/16	23.81

GENERAL NOTE: See ANSI B7.7-2000 for proper flange diameters.

Copyright ASME International
Provided by IHS under license with ASME
No reproduction or networking permitted without license from IHS
Not for Resale

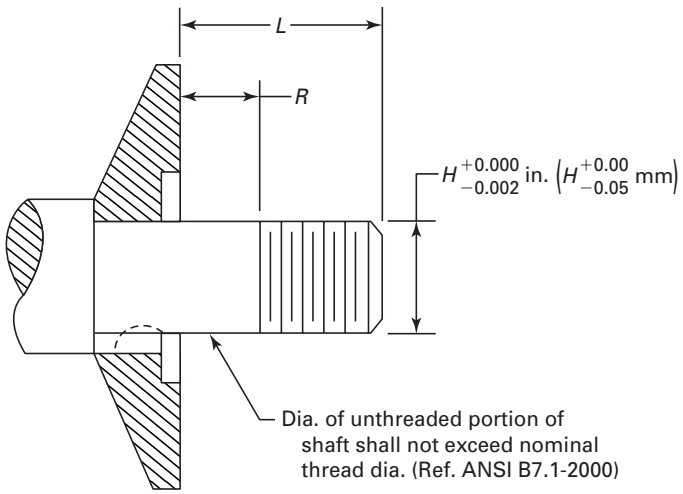

Table 21 Straight Wheel Grinders

H	*L*, in.	*L*, mm
3/8–24 UNF-2A	1 1/8	28.58
1/2–13 UNC-2A	1 3/4	44.45
5/8–11 UNC-2A	2 1/8	53.98
5/8–11 UNC-2A	3 1/8	79.38
3/4–10 UNC-2A	3 1/4	82.55

GENERAL NOTES:
(1) See ANSI B7.1-2000 for proper flange diameters.
(2) *R* is governed by the thickness of the wheel.

11 CIRCULAR SAW ARBORS

Table 22 Round Arbors

Nominal Blade Dia., in.	Nominal Blade Dia., mm	Round Arbor Dia., in.	Round Arbor Dia., mm
6 to 8 1/2, incl.	152 to 216	5/8	15.88
9 to 12, incl.	228 to 305	3/4	19.05

Copyright ASME International
Provided by IHS under license with ASME
No reproduction or networking permitted without license from IHS
Not for Resale

NONMANDATORY APPENDIX A
CHUCKS AND SPINDLES

Table A-1 Chucks and Spindles

	Recommended Spindles	
Chuck Sizes	Threaded	Taper
3/16 and 1/4 light	3/8–24 UNF-2A	1
1/4 and 5/16 medium	3/8–24 UNF-2A or 1/2–20 UNF-2A	2 short
3/8 light	3/8–24 UNF-2A or 1/2–20 UNF-2A	2
3/8 medium	1/2–20 UNF-2A or 5/8–16 UN-2A	2
1/2 light	1/2–20 UNF-2A or 5/8–16UN-2A	33
1/2 medium	5/8–16 UN-2A or 3/4–16 UNF-2A	6
5/8 and 3/4 medium	5/8–16 UN-2A or 3/4–16 UNF-2A	3

-`,,```,,,,````-`-`,,`,,`,`,,`---

Copyright ASME International
Provided by IHS under license with ASME
No reproduction or networking permitted without license from IHS

Not for Resale

NONMANDATORY APPENDIX B
MOUNTING OF ABRASIVE WHEELS ON THREADED SPINDLES

Mounting shall conform to the applicable requirements of ANSI B7.1-2000.

Copyright ASME International
Provided by IHS under license with ASME
No reproduction or networking permitted without license from IHS
Not for Resale

B107 AMERICAN NATIONAL STANDARDS FOR HAND TOOLS

Socket Wrenches, Hand (Inch Series) B107.1-2002
Socket Wrenches, Extensions, Adaptors, and Universal Joints, Power Drive (Impact) (Inch Series) B107.2-2002
Driving and Spindle Ends for Portable Hand, Impact, Air, and Electric Tools (Percussion Tools Excluded) B107.4-2005
Socket Wrenches, Hand (Metric Series) B107.5M-2002
Adjustable Wrenches B107.8-2003
Handles and Attachments for Hand Socket Wrenches — Inch and Metric Series B107.10M-1996
Pliers: Diagonal Cutting and End Cutting B107.11-2002
Nutdrivers B107.12-2004
Pliers: Long Nose, Long Reach B107.13-2003
Hand Torque Tools (Mechanical) B107.14-2004
Flat Tip Screwdrivers B107.15-2002
Shears (Metal Cutting, Hand) B107.16M-1998 (R2004)
Gages, Wrench Openings, Reference B107.17M-1997
Pliers: Wire Twister B107.18-2003
Pliers: Retaining Ring B107.19-2004
Pliers: Lineman's, Iron Worker's, Gas, Glass, Fence, and Battery B107.20-2004
Wrench, Crowfoot B107.21-2005
Electronic Cutters B107.22M-1998 (R2004)
Pliers: Multiple Position, Adjustable B107.23-2004
Locking Pliers B107.24-2002
Pliers: Performance Test Methods B107.25-2002
Pliers: Multiple Position, Electrical Connector B107.27-2003
Electronic Torque Instruments B107.28-2005
Electronic Tester, Hand Torque Tools B107.29-2005
Cross Tip Screwdrivers B107.30-2002
Screwdrivers, Cross Tip Gaging B107.31M-1997
Socket Wrenches, Impact (Metric Series) B107.33M-2002
Socket Wrenches for Spark Plugs B107.34-2003
Pliers: Locking, Clamp, and Tubing Pinch-Off B107.36-2002
Pliers: Wire Cutters/Strippers B107.37-2003
Electronic Pliers B107.38M-1998
Nail Hammers: Safety Requirements B107.41-2004
Hatchets: Safety Requirements B107.42M-1997 (R2004)
Wood-Splitting Wedges B107.43-2002
Glaziers' Chisels and Wood Chisels B107.44-2002
Ripping Chisels and Flooring/Electricians' Chisels B107.45-2002
Stud, Screw, and Pipe Extractors: Safety Requirements B107.46-2004
Metal Chisels, Punches, and Drift Pins B107.48-2005
Nail Sets B107.49-2004
Brick Chisels and Brick Sets: Safety Requirements B107.50M-1998
Star Drills: Safety Requirements B107.51-2001
Nail-Puller Bars: Safety Requirements B107.52M-1998
Ball Peen Hammers: Safety Requirements B107.53-2004
Heavy Striking Tools: Safety Requirements B107.54-2001
Axes: Safety Requirements B107.55-2002
Body Repair Hammers and Dolly Blocks: Safety Requirements B107.56-1999
Bricklayers' Hammers and Prospecting Picks: Safety Requirements B107.57-2001
Riveting, Scaling, and Tinner's Setting Hammers: Safety Requirements B107.58M-1998
Slugging and Striking Wrenches B107.59-2002
Pry Bars B107.60-2004
Wrenches B107.100-2002

The ASME Publications Catalog shows a complete list of all the Standards published by the Society. For a complimentary catalog, or the latest information about our publications, call 1-800-THE-ASME (1-800-843-2763).

Copyright ASME International
Provided by IHS under license with ASME
No reproduction or networking permitted without license from IHS
Not for Resale

ASME B107.4-2005

ISBN 0-7918-2976-6





N02305

Copyright ASME International
Provided by IHS under license with ASME
No reproduction or networking permitted without license from IHS

Not for Resale