STD.ASME B107.35M-ENGL 1997 ■ 0759670 0583055 6T6 ■

ASME B107.35M-1997

NUT DRIVERS (SPIN TYPE, SCREWDRIVER GRIP) (METRIC SERIES)

AN AMERICAN NATIONAL STANDARD

The American Society of Mechanical Engineers

COPYRIGHT American Society of Mechanical Engineers
Licensed by Information Handling Services



The American Society of
Mechanical Engineers

AN AMERICAN NATIONAL STANDARD

NUT DRIVERS (SPIN TYPE, SCREWDRIVER GRIP) (METRIC SERIES)

ASME B107.35M-1997

COPYRIGHT American Society of Mechanical Engineers
Licensed by Information Handling Services

Date of Issuance: May 27, 1997

This Standard will be revised when the Society approves the issuance of a new edition. There will be no addenda or written interpretations of the requirements of this Standard to this edition.

ASME is the registered trademark of The American Society of Mechanical Engineers.

This code or standard was developed under procedures accredited as meeting the criteria for American National Standards. The Consensus Committee that approved the code or standard was balanced to assure that individuals from competent and concerned interests have had an opportunity to participate. The proposed code or standard was made available for public review and comment which provides an opportunity for additional public input from industry, academia, regulatory agencies, and the public-at-large.

ASME does not "approve," "rate," or "endorse" any item, construction, proprietary device, or activity.

ASME does not take any position with respect to the validity of any patent rights asserted in connection with any items mentioned in this document, and does not undertake to insure anyone utilizing a standard against liability for infringement of any applicable Letters Patent, nor assume any such liability. Users of a code or standard are expressly advised that determination of the validity of any such patent rights, and the risk of infringement of such rights, is entirely their own responsibility.

Participation by federal agency representative(s) or person(s) affiliated with industry is not to be interpreted as government or industry endorsement of this code or standard.

ASME accepts responsibility for only those interpretations issued in accordance with governing ASME procedures and policies which preclude the issuance of interpretations by individual volunteers.

No part of this document may be reproduced in any form,
in an electronic retrieval system or otherwise,
without the prior written permission of the publisher.

The American Society of Mechanical Engineers
345 East 47th Street, New York, NY 10017

Copyright © 1997 by
THE AMERICAN SOCIETY OF MECHANICAL ENGINEERS
All Rights Reserved
Printed in U.S.A.

COPYRIGHT American Society of Mechanical Engineers
Licensed by Information Handling Services

FOREWORD

(This Foreword is not part of ASME B107.35M-1997.)

The American National Standards Committee B107, Hand Tools and Accessories, under sponsorship by The American Society of Mechanical Engineers, held its organizational meeting on June 28, 1967. Subcommittees were subsequently organized to handle the expanded need of both inch and metric series American National Standards dealing with various hand tools. This Standard is one of a series of such standards.

Members of the Hand Tools Institute have been major contributors to the development of these standards in their committee work, their knowledge of the products, and their active efforts in promoting the adoption of the standards.

When the Hand Tools Institute Standards Committee considered revising the original Nut Driver Standard, ASME B107.12, it was decided that a better standard could be written if the metric nut drivers was separated from the inch seris.

This edition of the Standard was submitted to industry for review and comment. Following approval by ASME Standards Committee B107, it was approved by the American National Standards Institute on February 6, 1997.

COPYRIGHT American Society of Mechanical Engineers
Licensed by Information Handling Services

ASME STANDARDS COMMITTEE B107
Hand Tools and Accessories

(The following is the roster of the Committee at the time of approval of this Standard.)

OFFICERS

R. R. McCullough, *Chair*
R. B. Wright, *Vice Chair*
G. L. Fechter, *Secretary*

COMMITTEE PERSONNEL

R. M. Byrne, Trade Association Management, Inc.
A. A. Speranza, *Alternate,* Hand Tools Institute
G. L. Fechter, The American Society of Mechanical Engineers
R. P. Hall, U.S. Air Force
A. Herskovitz, U.S. Department of the Army
S. Jiles, Southern California Gas
C. M. Knapp, U.S. Air Force
J. C. Marvil, General Services Administration
A. Carr, *Alternate,* General Services Administration
R. R. McCullough, Cooper Industries
G. E. Olson, Consultant
B. Pagac, Snap-On, Inc.
R. W. Reynolds, Stanley Mechanics Tools
W. R. Wacker, BAC Associates, Inc.
R. B. Wright, Wright Tool Co.

COPYRIGHT American Society of Mechanical Engineers
Licensed by Information Handling Services

CONTENTS

Foreword iii
Standards Committee Roster v

1 Scope 1

2 Classification 1

3 Normative References 1

4 Requirements 1

5 Test Procedures 2

6 Designations 3

7 Type, Class, and Style Provisions 3

Figures

1 Type I, Class 1, Styles A and B — Conventional Length Nut Driver with Solid Shaft 5
2 Type I, Class 2, Styles A and B — Conventional Length Nut Driver with Hollow Shaft 6
3 Type II, Styles A and B — Stubby Length Nut Driver 7
4 Type III — Miniature Handle Nut Driver 8
5 Torsional Moment Test 9
6 Bending Moment Test 10

Tables

1 Type I, Class 1, Styles A and B — Conventional Length Nut Driver with Solid Shaft 5
2 Type I, Class 2, Styles A and B — Conventional Length Nut Driver with Hollow Shaft 6
3 Type II, Styles A and B — Stubby Length Nut Driver 7
4 Type III — Miniature Handle Nut Driver 8
5 Torsional Moment Test — Hexagonal Mandrel Dimensions and Maximum Depth of Mandrel Insertion 9
6 Bending Moment Test — Hexagonal Mandrel Dimensions and Maximum Depth of Mandrel Insertion 10

COPYRIGHT American Society of Mechanical Engineers
Licensed by Information Handling Services

NUT DRIVERS (SPIN TYPE, SCREWDRIVER GRIP) (METRIC SERIES)

1 SCOPE

This Standard is intended to cover the general and dimensional requirements for the commonly used metric nut drivers with an integral socket and shaft that utilizes a screwdriver-type hand grip. Inclusion of dimensional data in this Standard is not intended to imply that all of the products described herein are stock production sizes.

2 CLASSIFICATION

The nut drivers covered by this Standard shall be of the following types, classes, and styles, as specified.

Type I — conventional length
  Class 1 — solid shaft
    Style A — conventional handle
    Style B — cushion grip handle
  Class 2 — hollow shaft
    Style A — conventional handle
    Style B — cushion grip handle
Type II — stubby length
  Style A — conventional handle
  Style B — cushion grip handle
Type III — miniature handle

3 NORMATIVE REFERENCES

The following documents form a part of this Standard to the extent specified herein.

ANSI/ASME B46.1-1985, Surface Texture (Surface Roughness, Waviness, and Lay)

ASME B107.17M-1991, Gages, Wrench Openings, Reference

ASTM E 18-1994, Standard Test Methods for Rockwell Hardness and Rockwell Superficial Hardness of Metallic Materials.

ASTM D 2240-1991, Standard Test Method for Rubber Property — Durometer Hardness

ASME B107.4M-1995, Driving and Spindle Ends for Portable Hand, Impact, Air, and Electric Tools (Percussion Tools Excluded)

4 REQUIREMENTS

4.1 Illustrations

The illustrations shown herein are descriptive and not restrictive, and are not intended to preclude the manufacture of nut drivers which are otherwise in accordance with this Standard.

4.2 Materials

The materials used in the manufacture of nut drivers shall be such as to produce tools conforming to the requirements specified in this Standard.

4.3 Marking

Each item shall be marked in a legible manner with the manufacturer's name, country of manufacture, product number, and nominal socket opening size. The method of marking shall be such that it will endure the normal usage for a nut driver for an extended period of time.

4.4 Hardness

The socket shall be hardened to not less than 35 HRC, or case hardened 0.13 mm deep (minimum) to a hardness not less than 89 HR15n. When surface preparation is necessary, the amount of material removed in the area contacted by the indenter shall not exceed 0.18 mm.

4.5 Test Loads

When tested as specified, nut drivers shall be capable of withstanding the test loads specified in the applicable tables without failure or permanent deformation (set) which might affect durability or serviceability.

4.6 Socket Opening

The nut or engaging surfaces (load bearing) of the socket shall be well defined single hexagon (6 point). The socket opening dimensions and tolerances shall conform to the gauging requirements of ASME B107.17M before and after testing, as set forth in paras. 5.3.1 and 5.3.2. The socket opening shall be single

COPYRIGHT American Society of Mechanical Engineers
Licensed by Information Handling Services

hexagon (6 point). Manufacturing process or pilot holes, if present in the socket openings, shall not exceed the minimum allowable across flats dimension times 1.04.

4.7 Finish

4.7.1 Coatings. The external surfaces of sockets, shanks, and internal drivers shall be treated in a manner to resist rust or corrosion (see para. 4.8.3). There shall be no evidence of peeling or chipping of external finishes.

4.7.2 Surface Roughness. The socket and shank shall have a maximum of 3.2 μm in accordance with ANSI/ASME B46.1. All edges and corners which may be potentially injurious shall be smooth.

4.8 Handles

The handles shall be of suitable material capable of withstanding the handle tests specified in para. 5.4.

4.8.1 Color Coding. When specified, handles and/or shanks shall be color coded in accordance with the following chart.

Color Coding Chart

Socket Opening Nominal Size, mm	Color
2	Amber or Yellow
3	Blue
3.2	Brown
4	Red
4.5	Amber or Yellow
5	Black
5.5	Brown
6	Red
7	Orange
8	Amber or Yellow
9	Green
10	Blue
11	Brown
12	Red
13 and larger	Optional

4.8.2 Handle Shape and Finish. Handles shall be suitably shaped and finished to provide a comfortable grip. They shall be free from rough edges, sharp corners, or tool marks that affect the appearance and comfort of the tool. They shall meet the dimensional requirements specified in the applicable tables.

4.8.3 Handle with Internal Drive. When specified, handles shall be provided with a 6.3 or 10 mm square internal drive opening. Square drive dimensions and tolerances shall be in accordance with ASME B107.4M. The drive shall be flush with the butt end of the handle. The drive shall be capable of meeting the same torsional load requirements as set forth for the socket end. A square external drive tang in accordance with ASME B107.4M shall be used for the test mandrel.

4.8.4 Cushion Grip. Style B nut driver handles shall be furnished with cushion grips. The grip material shall be capable of meeting the handle solvent test specified in para. 5.4.1. The length of the cushion grip shall be at least 60% of the handle length, and there shall be no detectable slippage between the handle and the cushion grip under normal usage. The original hardness shall be Shore A60 to A75 when tested in accordance with ASTM D 2240, and the hardness after the solvent test shall not be greater than Shore A80.

4.9 Dimensions

Dimensions shall be in accordance with the applicable tables.

5 TEST PROCEDURES

5.1 Safety

Many tests required herein are inherently hazardous, and adequate safeguards for personnel and property shall be employed in conducting such tests.

5.2 Hardness

Hardness tests shall be conducted in accordance with ASTM E 18.

5.3 Load

Load tests shall be conducted to determine conformance with the criteria of paras. 5.3.1 and 5.3.2, and the applicable test load requirements specified in Tables 1 through 4.

5.3.1 Torsional Test Loads. Torsional tests shall be conducted in a manner similar to that shown in Fig. 5. Test mandrels shall conform to the dimensions in Table 5 and shall be hardened to not less than 55 HRC. The socket openings shall be gauged prior to testing, and only the nut drivers which are in accordance with the gage shall be tested. The tests shall be conducted after preheating the entire tool to a uniform temperature of 51.70°C, and the load shall be applied within 1 min after removing the tool from the heating medium. The socket of the tool shall be inserted over

COPYRIGHT American Society of Mechanical Engineers
Licensed by Information Handling Services

STD.ASME B107.35M-ENGL 1997 ■ 0759670 0583063 772 ■

the mandrel to the depth prescribed in Table 5. The load shall be applied and sustained for a minimum of 10 sec. The handle may be gripped in an area beyond the insertion distance of the socket shank by means of a pair of pliers or the equivalent. It shall be permissible to support the handle in order to maintain the tool in a suitable position for testing, provided that the supporting means does not exert pressure endwise during testing. Any cracking, excessive brinelling, slippage of the handle with respect to the shank, failure of the socket opening to conform to the gauging requirement, or failure to sustain the test load for the prescribed time shall constitute failure.

5.3.2 Bending Moment Test Loads. Bending moment tests shall be conducted in a manner similar to that shown in Fig. 6. Test mandrels shall conform to the dimensions in Table 6 and shall be hardened to not less than 55 HRC. In this test, the force shall be applied at or near the middle of the natural grip of the handle for a minimum of 10 sec. The force is to act substantially at right angles to the axis of the tool. The load is transmitted to the tool through the test mandrel inserted into the socket opening. When tested in this manner, the tool shall not crack, or break, nor show any signs of visible permanent set or looseness in the handle. The test shall be conducted at room temperature.

5.4 Handle Tests

5.4.1 Solvent Tests. Nut driver handles shall be capable of meeting the following test. Handles are to be fully immersed in the test liquids specified (use new handle for each liquid) for 15 min at room temperature, remove and let stand for 24 hr: DOT 3 brake fluid, gasoline, ethylene glycol, ethyl alcohol, and toluol. There shall be no permanent swelling, surface attack (except brand or paint removal), or degradation of the applicable performance requirements. The handle hardness after testing shall not be greater than Shore A80 when tested in accordance with ASTM D 2240.

6 DESIGNATIONS

The nut drivers shall be designated by the following data in the sequence shown: ASME B107.35M, nut driver (spin type, screwdriver grip), type, class, style, socket opening size, options.

EXAMPLE: ASME B107.35M, Nut Driver (Spin, Type, Screwdriver Grip), Type I, Class 2, Style A, 10 mm opening

Purchasers should select the preferred options permitted herein and include in the designation following the socket opening size.

7 TYPE, CLASS, AND STYLE PROVISIONS

7.1 Type I, Class 1 — Conventional Length — Solid Shaft

The Type I, Class 1, nut drivers shall consist of a round steel shaft with a socket at one end and a handle at the other end. A bolt clearance hole shall be provided in the socket end. The nut driver shall be similar to Fig. 1 and conform to Table 1 respectively for the size specified (see Section 6).

7.1.1 Style A and B. Style A nut drivers shall be provided with a conventional color coded handle and/or shank. Style B nut drivers shall be provided with a cushion grip handle and need not be color coded.

7.2 Type I, Class 2 — Conventional Length — Hollow Shaft

The Type I, Class 2, nut drivers shall consist of a round steel hollow shaft with a socket at one end and a handle at the other end. The nut drives shall be similar to Fig. 2 and conform to Table 2 for the size specified (see Section 6).

7.2.1 Styles A and B. Style A nut drivers shall be provided with a conventional color coded handle and/or shank. Style B nut drivers shall be provided with a cushion grip handle and need not be color coded.

7.3 Type II — Stubby Length

The Type II nut drivers shall consist of a round steel shaft with a socket at one end and a handle at the other end. A bolt clearance hole shall be provided in the shaft of the socket end. The nut driver shall be similar to Fig. 3 and conform to Table 3 for the size specified (see Section 6).

7.3.1 Styles A and B. Style A nut drivers shall be provided with a conventional color coded handle and/or shank. Style B nut drivers shall be provided with a cushion grip handle and need not be color coded.

COPYRIGHT American Society of Mechanical Engineers
Licensed by Information Handling Services

STD.ASME B107.35M-ENGL 1997 ■ 0759670 0583064 609 ■

7.4 Type III — Miniature Handle

The Type III nut drivers shall consist of a round steel shaft with a socket at one end and a handle at the other end. A bolt clearance hole shall be provided in the shaft of the socket end. The nut driver shall be similar to Fig. 4 and conform to Table 4 for the size specified (see Section 6). Handles and/or shank need not be color coded.

COPYRIGHT American Society of Mechanical Engineers
Licensed by Information Handling Services

TABLE 1 TYPE I, CLASS 1, STYLES A AND B — CONVENTIONAL LENGTH NUT DRIVER WITH SOLID SHAFT

Nominal Socket Opening, *A*, mm	Socket Diameter Outside, *B*, Max., mm	Shaft Diameter, *C*, Max., mm	Handle Diameter Outside, *D*, Min., mm	Depth of Hex, *E*, Min., mm	Blade Length, *F*, Min., mm	Diameter of Hole, *G*, Min., mm	Depth of Hole, *H*, Min., mm	Length of Handle, *J*, Min., mm	Torsional Moment Test Load, Min., cm-kg	Bending Moment Test Load, Min., cm-kg
4	8.5	8.1	22.0	2.4	70	2.2	25	79	58	52
4.5	9.7	8.1	22.0	2.6	70	2.5	25	79	63	58
5	9.7	9.5	22.0	2.8	70	2.9	25	79	69	58
5.5	10.2	9.5	22.0	2.8	70	3.3	25	79	86	69
6	10.8	9.5	22.0	3.1	70	3.6	25	79	86	81
7	12.1	9.5	22.0	3.6	70	4.2	25	79	86	92
8	13.0	10.2	22.0	3.6	70	5.2	25	79	86	104
9	13.8	11.8	22.0	4.1	70	5.3	25	79	98	115
10	15.6	11.8	25.0	4.6	70	6.3	25	88	121	138
11	16.8	13.4	25.0	5.5	70	7.3	25	88	156	167
12	17.5	15.0	25.0	6.1	70	8.3	25	88	173	202
13	18.5	15.0	25.0	6.1	70	8.3	25	88	184	242
14	20.6	16.8	27.0	6.1	70	10.1	25	92	184	300
16	22.7	16.8	27.0	7.0	70	11.1	25	92	202	346
17	23.6	16.8	27.0	8.0	70	11.7	25	92	240	374
18	24.5	16.8	27.0	9.0	70	12.2	25	92	259	432

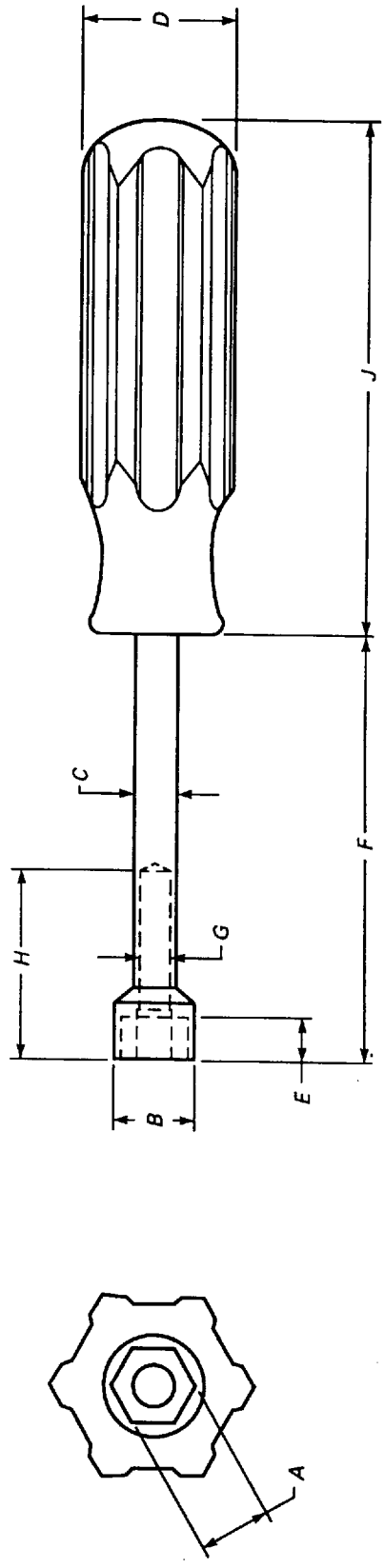

FIG. 1 TYPE I, CLASS 1, STYLES A AND B — CONVENTIONAL LENGTH NUT DRIVER WITH SOLID SHAFT

COPYRIGHT American Society of Mechanical Engineers
Licensed by Information Handling Services

TABLE 2 TYPE I, CLASS 2, STYLES A AND B — CONVENTIONAL LENGTH NUT DRIVER WITH HOLLOW SHAFT

Nominal Socket Opening, *A*, mm	Socket Diameter Outside, *B*, Max., mm	Shaft Diameter, *C*, Max., mm	Handle Diameter Outside, *D*, Min., mm	Depth of Hex, *E*, Min., mm	Blade Length, *F*, Min., mm	Diameter of Hole, *G*, Min., mm	Depth of Hole, *H*, Min., mm	Length of Handle, *J*, Min., mm	Torsional Moment Test Load, Min., cm-kg	Bending Moment Test Load, Min., cm-kg
4	8.5	8.1	22.0	2.4	70	2.2	70	79	58	52
4.5	9.7	8.1	22.0	2.6	70	2.5	70	79	63	58
5	9.7	9.5	22.0	2.8	70	2.9	70	79	69	58
5.5	10.2	9.5	22.0	2.8	70	3.3	70	79	86	69
6	10.8	9.5	22.0	3.1	70	3.6	70	79	86	81
7	12.1	9.5	22.0	3.6	70	4.2	70	79	86	92
8	13.0	10.2	22.0	3.6	70	5.2	70	79	86	104
9	13.8	11.8	22.0	4.1	70	5.3	70	79	98	115
10	15.6	11.8	25.0	4.6	70	6.3	70	88	121	138
11	16.8	13.4	25.0	5.5	70	7.3	70	88	156	167
12	17.5	15.0	25.0	6.1	70	8.3	70	88	173	202
13	18.5	15.0	25.0	6.1	70	8.3	70	88	184	242
14	20.6	16.8	27.0	6.1	70	10.1	70	92	184	300
16	22.7	16.8	27.0	7.0	70	11.1	70	92	202	346
17	23.6	16.8	27.0	8.0	70	11.7	70	92	240	374
18	24.5	16.8	27.0	9.0	70	12.2	70	92	259	432

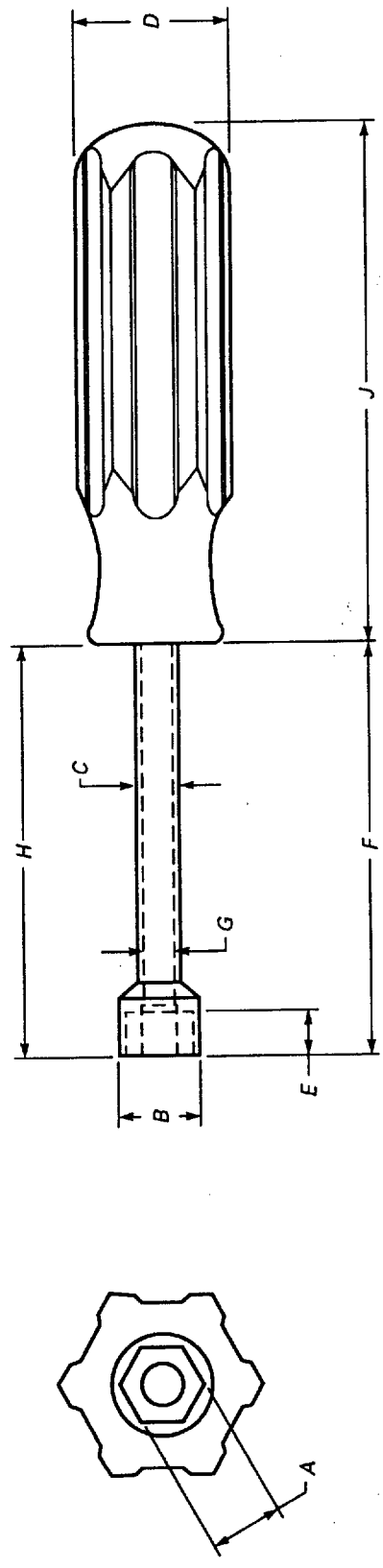

FIG. 2 TYPE I, CLASS 2, STYLES A AND B — CONVENTIONAL LENGTH NUT DRIVER WITH HOLLOW SHAFT

COPYRIGHT American Society of Mechanical Engineers
Licensed by Information Handling Services

TABLE 3 TYPE II, STYLES A AND B — STUBBY LENGTH NUT DRIVER

Nominal Socket Opening, *A*, mm	Socket Diameter Outside, *B*, Max., mm	Shaft Diameter, *C*, Max., mm	Handle Diameter Outside, *D*, Min., mm	Depth of Hex, *E*, Min., mm	Blade Length, *F*, Min., mm	Diameter of Hole, *G*, Min., mm	Depth of Hole, *H*, Min., mm	Length of Handle, *J*, Min., mm	Torsional Moment Test Load, Min., cm-kg	Bending Moment Test Load, Min., cm-kg
4	8.5	8.1	27.0	2.4	28	2.2	22	41	58	52
4.5	9.7	8.1	27.0	2.6	28	2.5	22	41	63	58
5	9.7	9.5	27.0	2.8	28	2.9	22	41	69	58
5.5	10.2	9.5	27.0	2.8	28	3.3	22	41	86	69
6	10.8	9.5	27.0	3.1	28	3.6	22	41	86	81
7	12.1	9.5	27.0	3.6	28	4.2	22	41	86	92
8	13.0	10.2	27.0	3.6	28	5.2	22	41	86	104
9	13.8	11.8	27.0	4.1	28	5.3	22	41	98	115
10	15.6	11.8	27.0	4.6	28	6.3	22	41	121	138

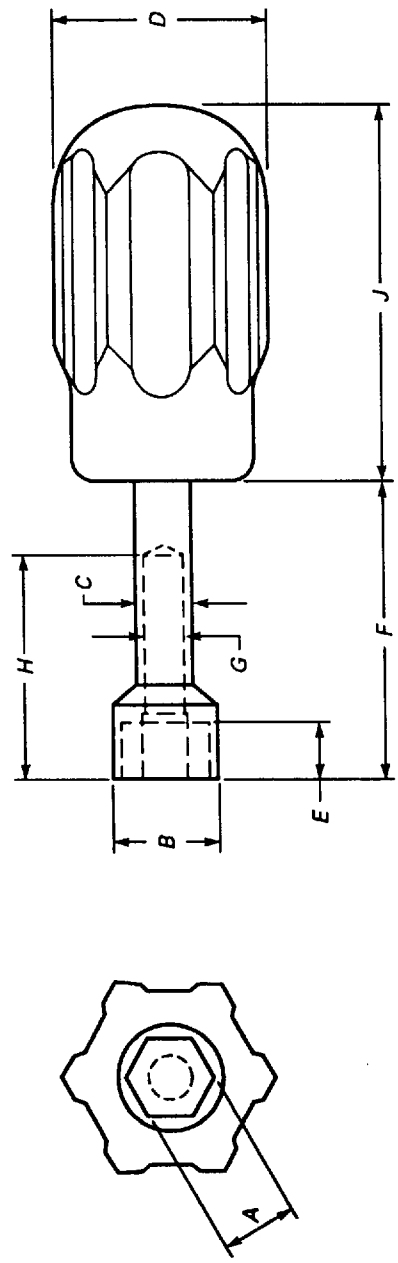

FIG. 3 TYPE II, STYLES A AND B — STUBBY LENGTH NUT DRIVER

COPYRIGHT American Society of Mechanical Engineers
Licensed by Information Handling Services

COPYRIGHT American Society of Mechanical Engineers
Licensed by Information Handling Services

TABLE 4 TYPE III — MINIATURE HANDLE NUT DRIVER

Nominal Socket Opening, *A*, mm	Socket Diameter Outside, *B*, Max., mm	Shaft Diameter, *C*, Max., mm	Handle Diameter Outside, *D*, Min., mm	Depth of Hex, *E*, Min., mm	Blade Length, *F*, Min., mm	Diameter of Hole, *G*, Min., mm	Depth of Hole, *H*, Min., mm	Length of Handle, *J*, Min., mm	Torsional Moment Test Load, Min., cm-kg
2	5.0	5.0	12.0	1.6	30	1.5	6	55	7
3	5.0	5.0	12.0	1.8	30	2.0	8	55	17
3.2	7.5	7.5	12.0	2.0	30	2.2	9	55	23
4	8.5	8.1	12.0	2.4	30	2.2	20	55	35
4.5	9.7	8.1	12.0	2.6	30	2.5	20	55	41
5	9.7	9.5	12.0	2.8	30	2.9	20	55	46
5.5	10.2	9.5	12.0	2.8	30	3.3	20	55	46
6	10.8	9.5	12.0	3.1	30	3.6	20	55	46
7	12.1	9.5	12.0	3.6	30	4.2	20	55	46
8	13.0	10.2	12.0	3.6	30	5.2	20	55	46
9	13.8	11.8	12.0	4.1	30	5.3	20	55	46
10	15.6	11.8	12.0	4.6	30	6.3	20	55	46

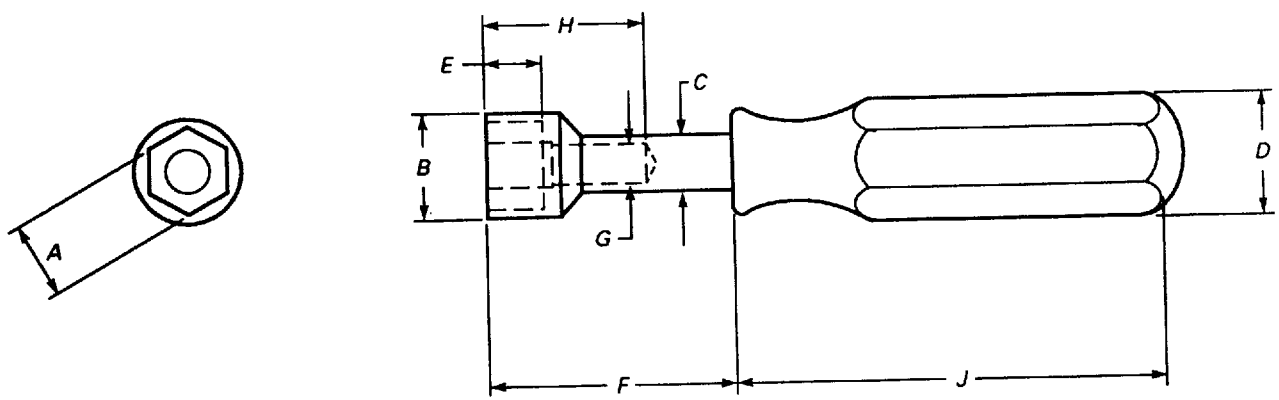

FIG. 4 TYPE III — MINIATURE HANDLE NUT DRIVER

TABLE 5 TORSIONAL MOMENT TEST — HEXAGONAL MANDREL DIMENSIONS AND MAXIMUM DEPTH OF MANDREL INSERTION

Nominal Size of Wrench Opening, mm	Hexagonal Mandrel Dimensions			Max. Depth of Mandrel Insertion, mm
	Across Flats Tolerance		Across Corners Min., mm	
	Plus (+)	Minus (−)		
2	0.025	0.050	2.220	2.4
3	0.025	0.050	3.340	2.4
3.2	0.025	0.050	3.900	2.4
4	0.025	0.050	4.470	2.4
4.5	0.025	0.050	5.050	2.4
5	0.025	0.050	5.630	2.6
5.5	0.025	0.050	6.190	2.8
6	0.025	0.050	6.760	3.0
7	0.025	0.050	7.890	3.6
8	0.025	0.050	9.030	3.8
9	0.025	0.050	10.180	4.0
10	0.025	0.050	11.340	5.0
11	0.025	0.050	12.460	5.7
12	0.025	0.050	13.590	6.4
13	0.025	0.076	14.730	7.1
14	0.025	0.076	15.880	9.5
16	0.025	0.076	18.160	9.6
17	0.025	0.076	19.300	9.6
18	0.025	0.076	20.440	10.5

$D \times W$ = cm-kg
D = centimeter
W = kilogram
C = a counterweight used to balance beam

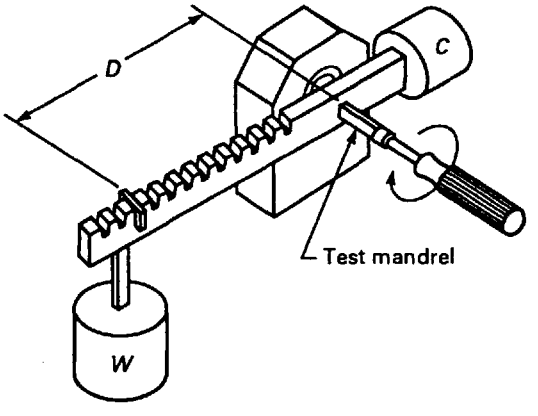

FIG. 5 TORSIONAL MOMENT TEST

COPYRIGHT American Society of Mechanical Engineers
Licensed by Information Handling Services

TABLE 6 BENDING MOMENT TEST — HEXAGONAL MANDREL DIMENSIONS AND MAXIMUM DEPTH OF MANDREL INSERTION

Nominal Size of Wrench Opening, mm	Hexagonal Mandrel Dimensions			Max. Depth of Mandrel Insertion, mm
	Across Flats Tolerance, mm		Across Corners, Min., mm	
	Plus (+)	Minus (−)		
2	0.025	0.050	2.220	3.0
3	0.025	0.050	3.340	3.0
3.2	0.025	0.050	3.900	4.3
4	0.025	0.050	4.470	5.0
4.5	0.025	0.050	5.050	5.0
5	0.025	0.050	5.630	5.0
5.5	0.025	0.050	6.190	5.0
6	0.025	0.050	6.760	5.0
7	0.025	0.050	7.890	5.0
8	0.025	0.050	9.030	5.7
9	0.025	0.050	10.180	6.5
10	0.025	0.050	11.340	6.8
11	0.025	0.050	12.460	7.3
12	0.025	0.050	13.590	7.5
13	0.025	0.076	14.730	8.3
14	0.025	0.076	15.880	11.3
16	0.025	0.076	18.160	11.3
17	0.025	0.076	19.300	11.3
18	0.025	0.076	20.440	11.3

D = centimeter
W = kilogram
D_1 = a stop point for the socket face equal to $^1/_2$ the mandrel insertion depth
$D \times W$ = cm–kg

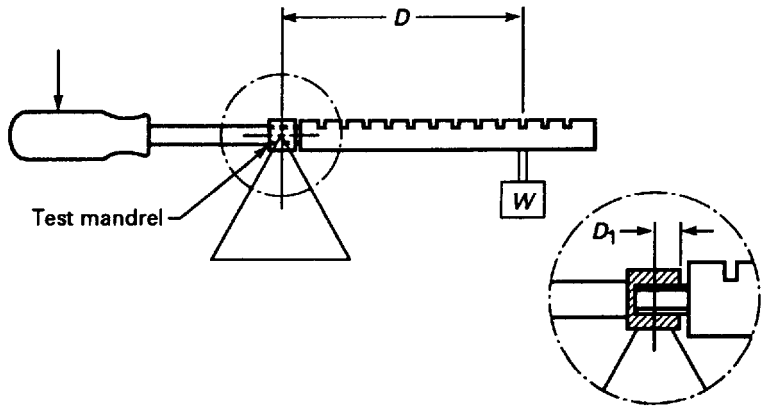

GENERAL NOTE: The above illustrated method is not intended to restrict the manner in which the required tests shall be taken.

FIG. 6 BENDING MOMENT TEST

COPYRIGHT American Society of Mechanical Engineers
Licensed by Information Handling Services