ASME B107.22M-1998
(Revision of ASME B107.22M-1991)

ELECTRONIC CUTTERS

AN AMERICAN NATIONAL STANDARD

REAFFIRMED 2004

FOR CURRENT COMMITTEE PERSONNEL
PLEASE E-MAIL CS@asme.org



The American Society of
Mechanical Engineers

Copyright ASME International
Provided by IHS under license with ASME
No reproduction or networking permitted without license from IHS

Not for Resale

The American Society of Mechanical Engineers

AN AMERICAN NATIONAL STANDARD

ELECTRONIC CUTTERS

ASME B107.22M-1998
(Revision of ASME B107.22M-1991)

Copyright ASME International
Provided by IHS under license with ASME
No reproduction or networking permitted without license from IHS
Not for Resale

Date of Issuance: October 30, 1998

This Standard will be revised when the Society approves the issuance of a new edition. There will be no addenda or written interpretations of the requirements of this Standard issued to this edition.

ASME is the registered trademark of The American Society of Mechanical Engineers.

This code or standard was developed under procedures accredited as meeting the criteria for American National Standards. The Standards Committee that approved the code or standard was balanced to assure that individuals from competent and concerned interests have had an opportunity to participate. The proposed code or standard was made available for public review and comment, which provides an opportunity for additional public input from industry, academia, regulatory agencies, and the public-at-large.

ASME does not "approve," "rate," or "endorse" any item, construction, proprietary device, or activity.

ASME does not take any position with respect to the validity of any patent rights asserted in connection with any items mentioned in this document, and does not undertake to insure anyone utilizing a standard against liability for infringement of any applicable Letters Patent, nor assumes any such liability. Users of a code or standard are expressly advised that determination of the validity of any such patent rights, and the risk of infringement of such rights, is entirely their own responsibility.

Participation by federal agency representative(s) or person(s) affiliated with industry is not to be interpreted as government or industry endorsement of this code or standard.

ASME accepts responsibility for only those interpretations issued in accordance with governing ASME procedures and policies which precludes the issuance of interpretations by individual volunteers.

No part of this document may be reproduced in any form,
in an electronic retrieval system or otherwise,
without the prior written permission of the publisher.

The American Society of Mechanical Engineers
Three Park Avenue, New York, NY 10016-5990

Copyright © 1998 by
THE AMERICAN SOCIETY OF MECHANICAL ENGINEERS
All Rights Reserved
Printed in U.S.A.

Copyright ASME International
Provided by IHS under license with ASME
No reproduction or networking permitted without license from IHS

Not for Resale

FOREWORD

(This Foreword is not part of ASME B107.22M-1998.)

The American National Standards Committee B107, Socket Wrenches and Drives, under sponsorship of the American Society of Mechanical Engineers, held its organizational meeting on June 28, 1967. Subsequently, the Committee was recognized as an ASME Standards Committee and was changed to Hand Tools and Accessories.

Members of the Hand Tools Institute Plier Standards Committee have been major contributors to the development of this Standard in their committee work, their knowledge of the product, and their active efforts in promoting the adoption of the standard.

This Standard on Electronic Cutters is the first standard covering the dimensional and functional characteristics of this type of pliers used in the electronic industry. Following the approval by the Standards Committee B107 and ASME, this Standard was approved by the American National Standards Institute on July 16, 1998.

Copyright ASME International
Provided by IHS under license with ASME
No reproduction or networking permitted without license from IHS
Not for Resale

ASME STANDARDS COMMITTEE B107
Hand Tools and Accessories

(The following is the roster of the Committee at the time of approval of this Standard.)

OFFICERS

R. R. McCullough, *Chair*
R. B. Wright, *Vice Chair*
J. R. Bird, *Secretary*

COMMITTEE PERSONNEL

R. M. Byrne, Trade Association Management, Inc.
A. A. Speranza, *Alternate,* Hand Tools Institute
J. R. Bird, The American Society of Mechanical Engineers
A. Herskovitz, U.S. Army
H. Kimball, Naval Air Warfare Center
C. M. Knapp, CASC/LGHB
R. R. McCullough, Cooper Industries
J. C. Marvil, General Services Administration
A. Carr, *Alternate,* Federal Supply Service
G. E. Olson, Gene Olson Engineering Consultants, Ltd.
W. T. Pagac, Snap-On Tools, Inc.
R. W. Reynolds, Stanley Mechanics Tools, Inc.
W. R. Wacker, BAC Associates, Inc.
R. B. Wright, Wright Tool Co.

--`,,,`,,`-`-`,,`,,`,`,,`---

Copyright ASME International
Provided by IHS under license with ASME
No reproduction or networking permitted without license from IHS
Not for Resale

CORRESPONDENCE WITH THE B107 COMMITTEE

General. ASME Standards are developed and maintained with the intent to represent the consensus of concerned interests. As such, users of this Standard may interact with the Committee by requesting interpretations, proposing revisions, and attending Committee meetings. Correspondence should be addressed to:

Secretary, B107 Standards Committee
The American Society of Mechanical Engineers
Three Park Avenue
New York, NY 10016-5990

Proposing Revisions. Revisions are made periodically to the Standard to incorporate changes that appear necessary or desirable, as demonstrated by the experience gained from the application of the Standard. Approved revisions will be published periodically.

The Committee welcomes proposals for revisions to this Standard. Such proposals should be as specific as possible, citing the paragraph number(s), the proposed wording, and a detailed description of the reasons for the proposal, including any pertinent documentation.

Interpretations. Upon request, the B107 Committee will render an interpretation of any requirement of the Standard. Interpretations can only be rendered in response to a written request sent to the Secretary of the B107 Standards Committee.

The request for interpretation should be clear and unambiguous. It is further recommended that the inquirer submit his/her request in the following format:

Subject: Cite the applicable paragraph number(s) and the topic of the inquiry.

Edition: Cite the applicable edition of the Standard for which the interpretation is being requested.

Question: Phrase the question as a request for an interpretation of a specific requirement suitable for general understanding and use, not as a request for an approval of a proprietary design or situation. The inquirer may also include any plans or drawings, which are necessary to explain the question; however, they should not contain proprietary names or information.

Requests that are not in this format may be rewritten in the appropriate format by the Committee prior to being answered, which may inadvertently change the intent of the original request.

ASME procedures provide for reconsideration of any interpretation when or if additional information that might affect an interpretation is available. Further, persons aggrieved by an interpretation may appeal to the cognizant ASME Committee or Subcommittee. ASME does not "approve," "certify," "rate," or "endorse" any item, construction, proprietary device, or activity.

Attending Committee Meetings. The B107 Standards Committee regularly holds meetings, which are open to the public. Persons wishing to attend any meeting should contact the Secretary of the B107 Standards Committee.

Copyright ASME International
Provided by IHS under license with ASME
No reproduction or networking permitted without license from IHS
Not for Resale

CONTENTS

Foreword iii
Standards Committee Roster v
Committee Correspondence vii

1 Scope 1

2 Classification 1

3 Normative References 1

4 Requirements 1
4.1 Illustrations 1
4.2 Materials 1
4.3 Design 1
4.4 Severed Wire Styles 1
4.5 Handles 1
4.6 Joint 2
4.7 Jaws 2
4.8 Finish 2
4.9 Marking 2
4.10 Workmanship 2

5 Testing Procedures 2
5.1 Safety 2
5.2 Handle Load Test 2
5.3 Cut Tests 3
5.4 Hardness Tests 3
5.5 Solvent Resistance Test 3

6 Type, Class, and Style Provisions 3
6.1 Type I, Class 1, Diagonal, Oval Head 3
6.2 Type I, Class 2, Diagonal, Relieved Oval Head 3
6.3 Type I, Class 3, Diagonal, Oval Head With Wire Holder 3
6.4 Type I, Class 4, Diagonal, Tapered Head 3
6.5 Type II, Class 1, Offset Nippers (Oblique) 3
6.6 Type III, Transverse Cutters (End) 3
6.7 Type IV, End Cutters (Angle) 3

7 Designations 4
7.1 Ordering Data 4

Copyright ASME International
Provided by IHS under license with ASME
No reproduction or networking permitted without license from IHS
Not for Resale

Figures

1 Severed Wire Styles With Cutting Edges Cross Section 5
2 Type I, Class 1, Diagonal, Oval Head 6
3 Type I, Class 2, Diagonal, Relieved Oval Head 7
4 Type I, Class 3, Diagonal, Oval Head With Wire Holder 8
5 Type I, Class 4, Diagonal, Tapered Head 9
6 Type II, Class 1, Offset Nippers (Oblique) 10
7 Type III, Transverse Cutters (End) 11
8 Type IV, End Cutters (Angle) 12

Tables

1 Wire Cut Test Specifications 5
2 Dimensions for Type I, Class 1, Diagonal, Oval Head 6
3 Dimensions for Type I, Class 2, Diagonal, Relieved Oval Head 7
4 Dimensions for Type I, Class 3, Diagonal, Oval Head With Wire Holder 8
5 Dimensions for Type I, Class 4, Diagonal, Tapered Head 9
6 Dimensions for Type II, Class 1, Offset Nippers (Oblique) 10
7 Dimensions for Type III, Transverse Cutters (End) 11
8 Dimensions for Type IV, End Cutters (Angle) 12

Copyright ASME International
Provided by IHS under license with ASME
No reproduction or networking permitted without license from IHS
Not for Resale

ELECTRONIC CUTTERS

1 SCOPE

This Standard covers the general dimensional and functional characteristics of electronic cutters having cutting edges diagonal to the cutters' longitudinal axis and cutters having cutting edges at right angles to the cutters' longitudinal axis.

Inclusion of dimensional and functional data in this Standard is not intended to imply that all the products described herein are stock production sizes. Consumers are requested to consult with manufacturers concerning a list of stock production sizes.

2 CLASSIFICATION

Type I Diagonal
- Class 1 Oval Head
- Class 2 Relieved Oval Head
- Class 3 Oval Head With Wire Holder
- Class 4 Tapered Head

Type II Offset Nippers (Oblique)
Type III Transverse Cutters (End)
Type IV End Cutters (Angle)

NOTE: The above types and classes shall be available with one of the following cutting styles: Style A – Standard Cutting Edges; Style B – Semi-Flush Cutting Edges; Style C – Flush Cutting Edges.

3 NORMATIVE REFERENCES

The following documents form a part of this Standard to the extent specified herein:

ASME B46.1-1995, Surface Texture (Surface Roughness, Waviness, and Lay)
ASME B107.25M-1996, Pliers — Performance Test Methods

Publisher: The American Society of Mechanical Engineers, Three Park Avenue, New York, NY 10016-5990

4 REQUIREMENTS

4.1 Illustrations

The illustrations herein are descriptive and not restrictive, and are not intended to preclude the manufacture of cutters which are otherwise in accordance with this Standard. All figures are shown without comfort grips or springs.

4.2 Materials

The materials used in the manufacture of electronic cutters shall be such as to produce cutters conforming to the requirements hereinafter specified.

4.3 Design

The cutters shall be similar to the figure to which reference is made and shall be properly proportioned in all parts so as to be strong, durable, and easy to operate.

4.4 Severed Wire Styles

All cutters shall be so designed as to produce one of the severed wire styles illustrated in Fig. 1.

4.4.1 Style A Standard. Cutting edges designed to cut wire specified in Table 1.

4.4.2 Style B Semi-Flush. Cutting edges designed for close flat cuts on wire specified in Table 1.

4.4.3 Style C Flush. Cutting edges designed for very close flat cuts on wire specified in Table 1.

4.5 Handles

4.5.1 Characteristics. Handles shall have a hardness of 30 HRC to 50 HRC. Handles of cutters shall be so shaped as to provide a comfortable grip and shall be free from rough edges and sharp corners.

4.5.2 Comfort Grips. Comfort grips shall be made of rubber, plastic, or other material capable of withstanding long, hard usage without deteriorating or rubbing off, and shall meet the solvent resistance test as specified

Copyright ASME International
Provided by IHS under license with ASME
No reproduction or networking permitted without license from IHS
Not for Resale

in para. 5.5. The comfort grips shall remain permanently attached under normal use of the tool. The ends of the handles shall not touch when the jaws are in the closed position.

WARNING: The comfort grips are not intended to give any degree of protection against electrical shock, and shall not be used on live electrical circuits.

4.6 Joint

4.6.1 Construction. There shall be no excessive sideways movement, play, or other indication of looseness of the two halves of the cutters when opened or closed that will affect the function of the cutters. The fastener shall have a hardness of 30 HRC to 50 HRC.

4.7 Jaws

4.7.1 Spring. All cutters shall have a spring. The spring shall be captive, durable, and capable of opening the jaws under normal use. The spring shall open the jaws to the minimum jaw opening distance, as indicated in the appropriate tables, for the normal life of the cutters.

4.7.2 Jaw Opening. Jaw opening distance shall be measured at the tips of the jaws. Beyond the minimum opening in the applicable tables, the jaws may open at increasing loads until the position stop is engaged.

4.7.3 Jaw Hardness. Cutting edges [within 0.06 in. (1.5 mm) of the cutting edge shoulder] shall have a hardness equivalent to 55 HRC to 65 HRC and meet the cut tests specified in para. 5.3. The balance of the jaw shall have a minimum hardness of 35 HRC.

4.8 Finish

4.8.1 Appearance. All cutters shall have finished heads. Finished surfaces shall have a maximum surface roughness of 63 μin. (1.6 μm) arithmetic average. Measurement of the finish shall be made with a measuring instrument using a 0.03 in. (0.8 mm) roughness width cutoff (see ASME B46.1). All other surfaces not finished shall be free of pits, burrs, cracks, and other defects which may adversely affect the performance or appearance of the cutters.

4.8.2 Coating. All surfaces must be coated or treated to inhibit rust.

4.9 Marking

4.9.1 Requirements. Cutters shall be marked in a plain and permanent manner with the manufacturer's name or trademark of such known character that the source of manufacture and country of origin may be readily determined. The markings shall be as permanent as the normal life expectancy of the cutters to which it is applied (providing the surface has not been subjected to a fretting or abrading action) and capable of withstanding cleaning normally experienced during its intended use.

4.10 Workmanship

4.10.1 Requirements. The requirements within this Standard are intended to describe the best commercial quality cutters available. Cutters shall conform to the requirements specified in this Standard.

5 TESTING PROCEDURES

5.1 Safety

Many tests required herein are inherently dangerous. Adequate safeguards for personnel and property shall be used when conducting such tests.

5.2 Handle Load Test

5.2.1 Procedure. Permanent set and deflection shall be tested in accordance with ASME B107.25M, para. 5.1. The load shall be applied at the point of maximum handle curvature. The cutters shall be tested with the comfort grips removed and a hardened jaw insert placed between the cutting edges.

5.2.1.1 Hardened Jaw Insert. Insert shall be approximately 0.06 in. (1.6 mm) thick and tapered if required so that the cutting edges are completely in contact with the insert when the handle load is applied. The insert shall be hardened to not less than 40 HRC.

5.2.2 Permanent Set and Deflection. Permanent set on all cutters shall not exceed 0.04 in. (1.0 mm) when subjected to a major load of 100 in.-lb (11 N·m). Deflection on all cutters less than 5 in. (127 mm) in nominal length shall not exceed 0.50 (12.7 mm). Deflection on all cutters 5 in. (127 mm) in nominal length or longer shall not exceed 0.75 in. (19.1 mm). If permanent set or deflection exceeds the maximum values

Copyright ASME International
Provided by IHS under license with ASME
No reproduction or networking permitted without license from IHS
Not for Resale

specified; if the handles or jaws break, crack, chip or spread under load; or if the fastener shows signs of weakness, the cutter shall be considered not acceptable.

5.3 Cut Tests

5.3.1 Wire Cut Test. The wire cut test shall be performed per ASME B107.25M, para. 5.2.1. Wire size shall be 0.032/0.036 in. (0.81/0.91 mm) in diameter and shall have the tensile strength specified in Table 1. Load shall be applied at a line of contact so that both handles directly oppose one another at the point of maximum handle curvature. Three cuts shall be made at the midpoint of the cutting edges. The load required to completely sever the wire shall not exceed the maximum handle loads specified in Table 1. There shall be no visible deformation or damage to the cutting edges as a result of this test.

5.3.2 Paper Cut Test. Following the wire cut test, the paper cut test shall be performed per ASME B107.25M, para. 5.2.2. Load shall be applied at a line of contact so that both handles directly oppose one another at the point of maximum handle curvature. The cutting edges shall completely and cleanly cut bond paper without exceeding the maximum load specified in ASME B107.25M, para. 5.2.2.3.

5.4 Hardness Tests

5.4.1 Procedure. The hardness ranges specified in paras. 4.5.1, 4.6.1, and 4.7.3 shall be tested in accordance with ASME B107.25M, para. 5.3. Hardness determination for handles shall be taken approximately midway between the joint fastener and the end of each handle.

5.5 Solvent Resistance Test

5.5.1 Procedure. Comfort grips shall be tested in accordance with ASME B107.25M, para. 5.5.1.

6 TYPE, CLASS, AND STYLE PROVISIONS

6.1 Type I, Class 1, Diagonal, Oval Head

Cutters shall be suitable for cutting wire close to a flat surface. Cutting edges shall have an angle of approximately 15 deg from the plane of the handles. One side of the jaw shall be recessed to provide a suitable cutting edge clearance. The cutters shall be similar to Fig. 2 and shall conform to dimensions in Table 2.

6.2 Type I, Class 2, Diagonal, Relieved Oval Head

Cutters shall be suitable for cutting wire close to a flat surface. Cutting edges shall have an angle of approximately 15 deg from the plane of the handles. One side of the jaw shall be relieved to permit cutting in limited access areas. The cutters shall be similar to Fig. 3 and shall conform to dimensions in Table 3.

6.3 Type I, Class 3, Diagonal, Oval Head With Wire Holder

Cutters have a special wire holding device or other means which prevents the cut off wire from falling. The cutters shall be similar to Fig. 4 and conform to dimensions in Table 4.

6.4 Type I, Class 4, Diagonal, Tapered Head

Cutters have a tapered head which allows maximum visibility for cutting in confined areas where accessibility is limited. The cutters shall be similar to Fig. 5 and conform to dimensions in Table 5.

6.5 Type II, Class 1, Offset Nippers (Oblique)

Cutters shall have an angled cutting edge which is used when space or angle of wire prohibits the use of other cutters. Used vertically and horizontally, they provide good visibility. Cutting is done mainly at the tip. The cutters shall be similar to Fig. 6 and conform to dimensions in Table 6.

6.6 Type III, Transverse Cutters (End)

Cutters are used for cutting in confined areas. Jaws shall taper uniformly from near the joint to the outermost end. The cutters shall be similar to Fig. 7 and conform to dimensions in Table 7.

6.7 Type IV, End Cutters (Angle)

Cutters have an angled cutting edge on the end of the nose. Jaws are relieved and tapered uniformly from near the joint to the outermost end. The cutters shall be similar to Fig. 8 and conform to dimensions in Table 8.

Copyright ASME International
Provided by IHS under license with ASME
No reproduction or networking permitted without license from IHS
Not for Resale

7 DESIGNATIONS

7.1 Ordering Data

Purchasers should select the preferred options permitted herein, and include the following information in procurement documents:

(a) Title, number, and date of this Standard.

(b) Type, class, and style of cutters required.

(c) Nominal size of cutters required.

Copyright ASME International
Provided by IHS under license with ASME
No reproduction or networking permitted without license from IHS
Not for Resale

TABLE 1 WIRE CUT TEST SPECIFICATIONS

Cutting Style	Wire Tensile Strength Tolerance ±10%	Maximum Handle Load
Style A – Standard	120,000 psi (828 MPa)	100 in.-lb (11 N·m)
Style B – Semi-Flush	90,000 psi (621 MPa)	50 in.-lb (5.5 N·m)
Style C – Flush	70,000 psi (483 MPa)	50 in.-lb (5.5 N·m)

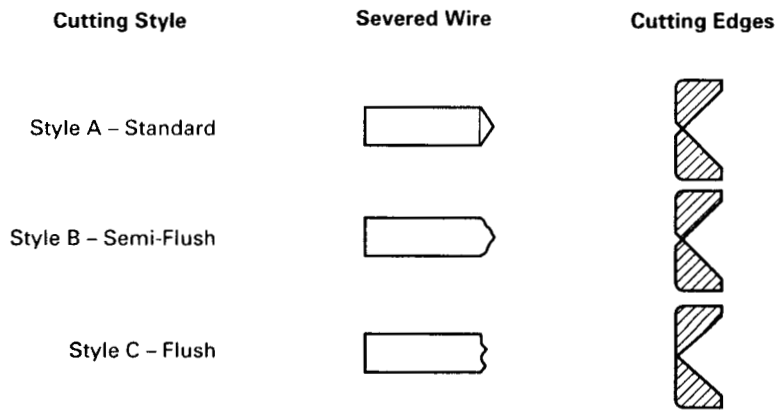

FIG. 1 SEVERED WIRE STYLES WITH CUTTING EDGES CROSS SECTION

Copyright ASME International
Provided by IHS under license with ASME
No reproduction or networking permitted without license from IHS
Not for Resale

TABLE 2 DIMENSIONS FOR TYPE I, CLASS 1, DIAGONAL, OVAL HEAD

Nominal Size in. (mm)	Overall Length, *A* [Note (1)] in. (mm) +0.187 (4.75) −0.250 (6.35)	Jaw Length, *B* in. (mm) ±0.094 (2.39)	Joint Thickness, *C* in. (mm) ±0.040 (1.02)	Jaw Width, *D* in. (mm) +0.032 (0.81) −0.046 (1.17)	Handle Span, *E* [Note (1)] in. (mm) +0.125 (3.18) −0.187 (4.75)	Minimum Jaw Opening in. (mm)
4 (102)	4.125 (104.77)	0.437 (11.09)	0.250 (6.35)	0.437 (11.09)	1.875 (47.63)	0.156 (3.96)
4½ (114)	4.625 (117.47)	0.500 (12.70)	0.281 (7.14)	0.468 (11.88)	1.875 (47.63)	0.156 (3.96)

NOTE:

(1) *A* and *E* dimensions in the Table are without comfort grips. Comfort grips shall not increase dimension *A* by more than 0.25 in. (6.4 mm) and dimension *E* by more than 0.50 in. (12.7 mm).

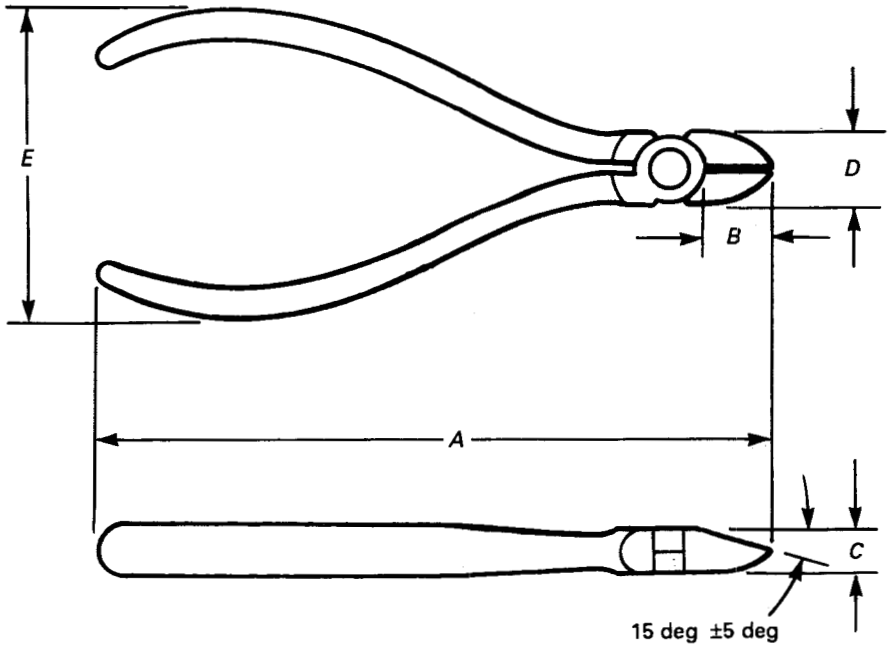

FIG. 2 TYPE I, CLASS 1, DIAGONAL, OVAL HEAD

Copyright ASME International
Provided by IHS under license with ASME
No reproduction or networking permitted without license from IHS
Not for Resale

TABLE 3 DIMENSIONS FOR TYPE I, CLASS 2, DIAGONAL, RELIEVED OVAL HEAD

Nominal Size in. (mm)	Overall Length, *A* [Note (1)] in. (mm) +0.187 (4.75) −0.250 (6.35)	Jaw Length, *B* in. (mm) ±0.094 (2.39)	Joint Thickness, *C* in. (mm) ±0.040 (1.02)	Jaw Width, *D* in. (mm) +0.032 (0.81) −0.046 (1.17)	Handle Span, *E* [Note (1)] in. (mm) +0.125 (3.18) −0.187 (4.75)	Tip Thickness, *F* in. (mm) ±0.015 (0.38)	Minimum Jaw Opening in. (mm)
4 (102)	4.125 (104.77)	0.437 (11.09)	0.250 (6.35)	0.437 (11.09)	1.875 (47.64)	0.032 (0.81)	0.156 (3.96)
4½ (114)	4.625 (117.47)	0.500 (12.70)	0.281 (7.14)	0.468 (11.88)	1.875 (47.63)	0.032 (0.81)	0.156 (3.96)

NOTE:

(1) *A* and *E* dimensions in the Table are without comfort grips. Comfort grips shall not increase dimension *A* by more than 0.25 in. (6.4 mm) and dimension *E* by more than 0.50 in. (12.7 mm).

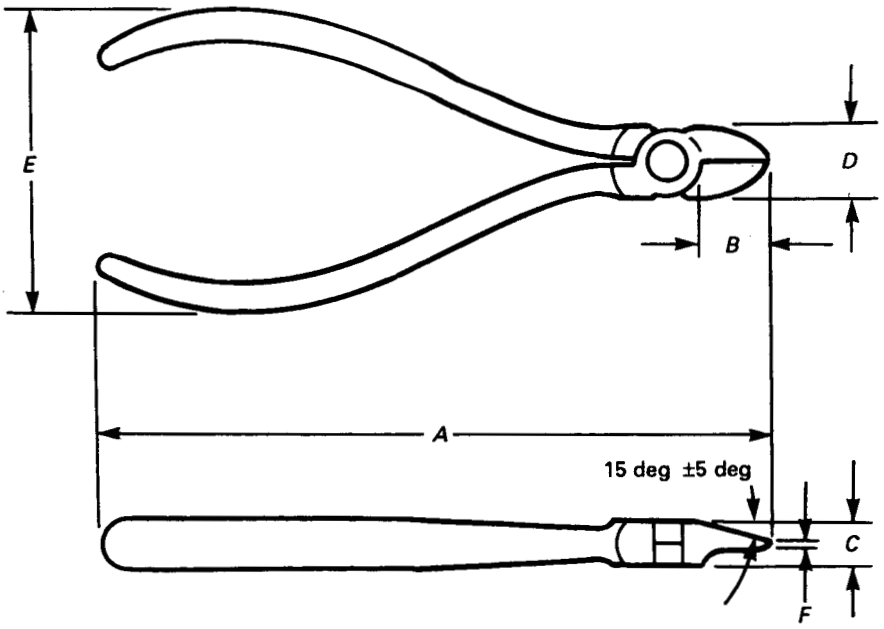

FIG. 3 TYPE I, CLASS 2, DIAGONAL, RELIEVED OVAL HEAD

Copyright ASME International
Provided by IHS under license with ASME
No reproduction or networking permitted without license from IHS
Not for Resale

TABLE 4 DIMENSIONS FOR TYPE I, CLASS 3, DIAGONAL, OVAL HEAD WITH WIRE HOLDER

Nominal Size in. (mm)	Overall Length, *A* [Note (1)] in. (mm) +0.187 (4.75) −0.250 (6.35)	Jaw Length, *B* in. (mm) ±0.094 (2.39)	Joint Thickness, *C* in. (mm) ±0.040 (1.02)	Jaw Width, *D* in. (mm) +0.032 (0.81) −0.046 (1.17)	Handle Span, *E* [Note (1)] in. (mm) +0.125 (3.18) −0.187 (4.75)	Minimum Jaw Opening in. (mm)
4 (102)	4.125 (104.77)	0.437 (11.09)	0.250 (6.35)	0.437 (11.09)	1.875 (47.63)	0.156 (3.96)
4½ (114)	4.625 (117.47)	0.500 (12.70)	0.281 (7.14)	0.468 (11.88)	1.875 (47.63)	0.156 (3.96)

NOTE:

(1) *A* and *E* dimensions in the Table are without comfort grips. Comfort grips shall not increase dimension *A* by more than 0.25 in. (6.4 mm) and dimension *E* by more than 0.50 in. (12.7 mm).

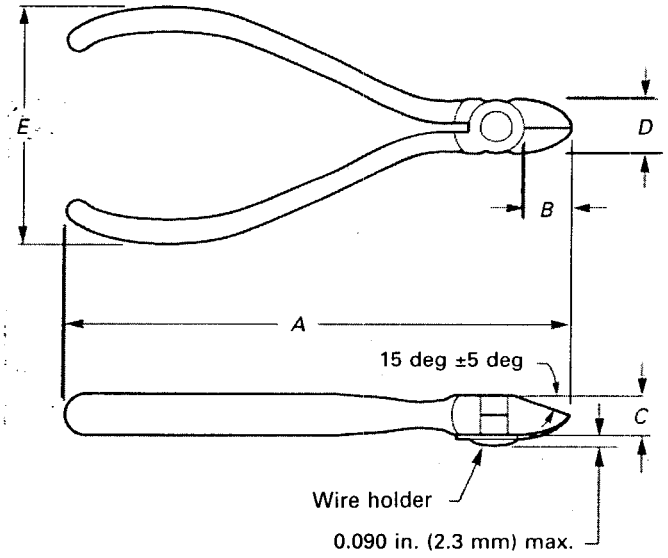

FIG. 4 TYPE I, CLASS 3, DIAGONAL, OVAL HEAD WITH WIRE HOLDER

Copyright ASME International
Provided by IHS under license with ASME
No reproduction or networking permitted without license from IHS
Not for Resale

TABLE 5 DIMENSIONS FOR TYPE I, CLASS 4, DIAGONAL, TAPERED HEAD

Nominal Size in. (mm)	Overall Length, *A* [Note (1)] in. (mm) +0.187 (4.75) −0.250 (6.35)	Jaw Length, *B* in. (mm) ±0.094 (2.39)	Joint Thickness, *C* in. (mm) ±0.040 (1.02)	Jaw Width, *D* in. (mm) +0.032 (0.81) −0.046 (1.17)	Handle Span, *E* [Note (1)] in. (mm) +0.125 (3.18) −0.187 (4.75)	Tip Thickness, *F* in. (mm) ±0.015 (0.38)	Tip Width, *G* in. (mm) ±0.062 (1.57)	Minimum Jaw Opening in. (mm)
4 (102)	4.125 (104.77)	0.437 (11.09)	0.250 (6.35)	0.437 (11.09)	1.875 (47.63)	0.032 (0.81)	0.062 (1.57)	0.156 (3.96)
4½ (114)	4.625 (117.47)	0.500 (12.70)	0.281 (7.14)	0.468 (11.88)	1.875 (47.63)	0.032 (0.81)	0.062 (1.57)	0.156 (3.96)

NOTE:

(1) *A* and *E* dimensions in the Table are without comfort grips. Comfort grips shall not increase dimension *A* by more than 0.25 in. (6.4 mm) and dimension *E* by more than 0.50 in. (12.7 mm).

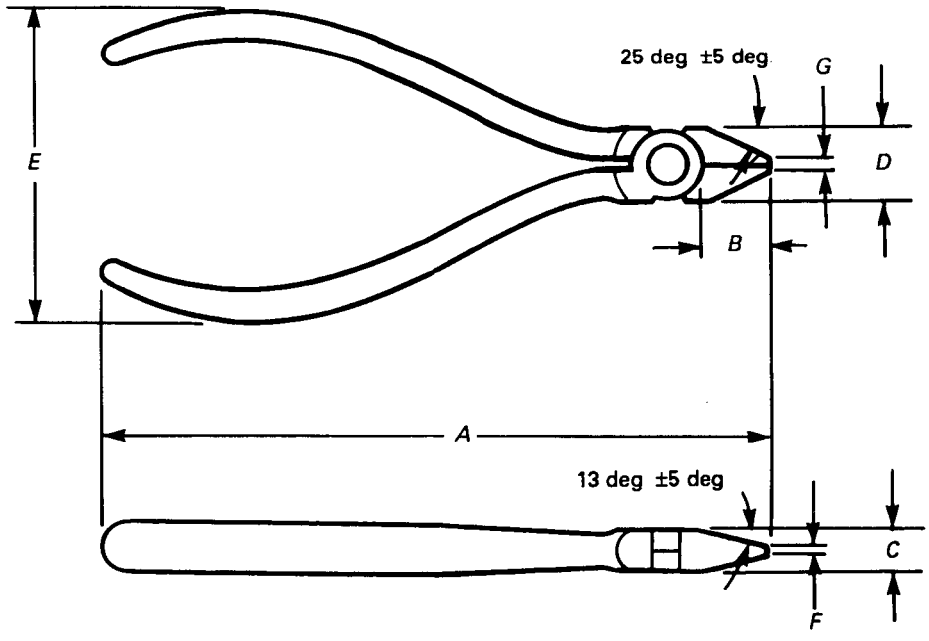

FIG. 5 TYPE I, CLASS 4, DIAGONAL, TAPERED HEAD

Copyright ASME International
Provided by IHS under license with ASME
No reproduction or networking permitted without license from IHS
Not for Resale

TABLE 6 DIMENSIONS FOR TYPE II, CLASS 1, OFFSET NIPPERS (OBLIQUE)

Nominal Size in. (mm)	Overall Length, *A* [Note (1)] in. (mm) +0.187 (4.75)	Jaw Length, *B* in. (mm) ±0.062 (1.58)	Joint Thickness, *C* in. (mm) ±0.032 (0.81)	Jaw Width, *D* in. (mm) +0.032 (0.81)	Handle Span, *E* [Note (1)] in. (mm) +0.125 (3.18)	Cutter Width, *F* in. (mm) ±0.015 (0.38)	Cutter Length, *G* in. (mm) ±0.094 (2.39)	Minimum Jaw Opening in. (mm)
4 (102)	4.125 (104.87)	0.437 (11.09)	0.250 (6.35)	0.437 (11.09)	1.875 (47.63)	0.032 (0.81)	0.437 (11.09)	0.156 (3.96)

NOTE:

(1) *A* and *E* dimensions in the Table are without comfort grips. Comfort grips shall not increase dimension *A* by more than 0.25 in. (6.4 mm) and dimension *E* by more than 0.50 in. (12.7 mm).

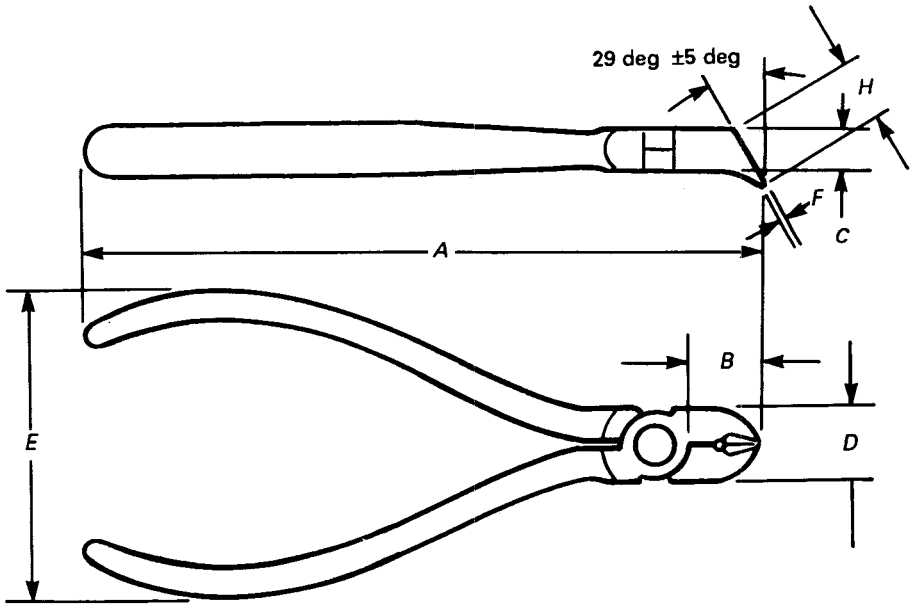

FIG. 6 TYPE II, CLASS 1, OFFSET NIPPERS (OBLIQUE)

Copyright ASME International
Provided by IHS under license with ASME
No reproduction or networking permitted without license from IHS
Not for Resale

TABLE 7 DIMENSIONS FOR TYPE III, TRANSVERSE CUTTERS (END)

Nominal Size in. (mm)	Overall Length, *A* [Note (1)] in. (mm) ±0.187 (4.75)	Jaw Length, *B* in. (mm) +0.125 (3.18) −0.250 (6.35)	Joint Thickness, *C* in. (mm) ±0.032 (0.81)	Jaw Width, *D* in. (mm) ±0.032 (0.81)	Handle Span, *E* [Note (1)] in. (mm) ±0.125 (3.18)	Tip Thickness, *F* in. (mm) ±0.032 (0.81)	Tip Width, *G* in. (mm) ±0.032 (0.81)	Minimum Jaw Opening in. (mm)
4½ (114)	4.687 (119.05)	1.000 (25.40)	0.250 (6.35)	0.437 (11.09)	1.875 (47.63)	0.125 (3.18)	0.187 (4.75)	0.375 (9.53)

NOTE:

(1) *A* and *E* dimensions in the Table are without comfort grips. Comfort grips shall not increase dimension *A* by more than 0.25 in. (6.4 mm) and dimension *E* by more than 0.50 in. (12.7 mm).

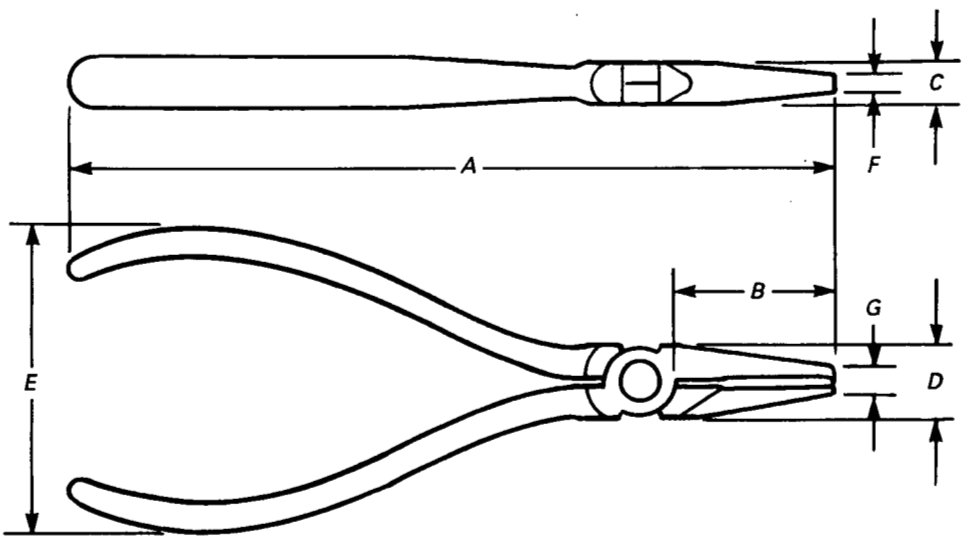

FIG. 7 TYPE III, TRANSVERSE CUTTERS (END)

Copyright ASME International
Provided by IHS under license with ASME
No reproduction or networking permitted without license from IHS
Not for Resale

TABLE 8 DIMENSIONS FOR TYPE IV, END CUTTERS (ANGLE)

Nominal Size in. (mm)	Overall Length, *A* [Note (1)] in. (mm) ±0.187 (4.75)	Jaw Length, *B* in. (mm) ±0.125 (3.18)	Joint Thickness, *C* in. (mm) ±0.032 (0.81)	Jaw Width, *D* in. (mm) ±0.032 (0.81)	Handle Span, *E* [Note (1)] in. (mm) ±0.125 (3.18)	Tip Width, *F* in. (mm) ±0.032 (0.81)	Cutter Length, G in. (mm) ±0.032 (0.81)	Minimum Jaw Opening in. (mm)
5 (127)	5.062 (128.57)	0.937 (23.80)	0.281 (7.14)	0.500 (12.70)	1.875 (47.63)	0.187 (4.75)	0.250 (6.35)	0.375 (9.53)

NOTES:

(1) *A* and *E* dimensions in the Table are without comfort grips. Comfort grips shall not increase dimension *A* by more than 0.25 in. (6.4 mm) and dimension *E* by more than 0.50 in. (12.7 mm).

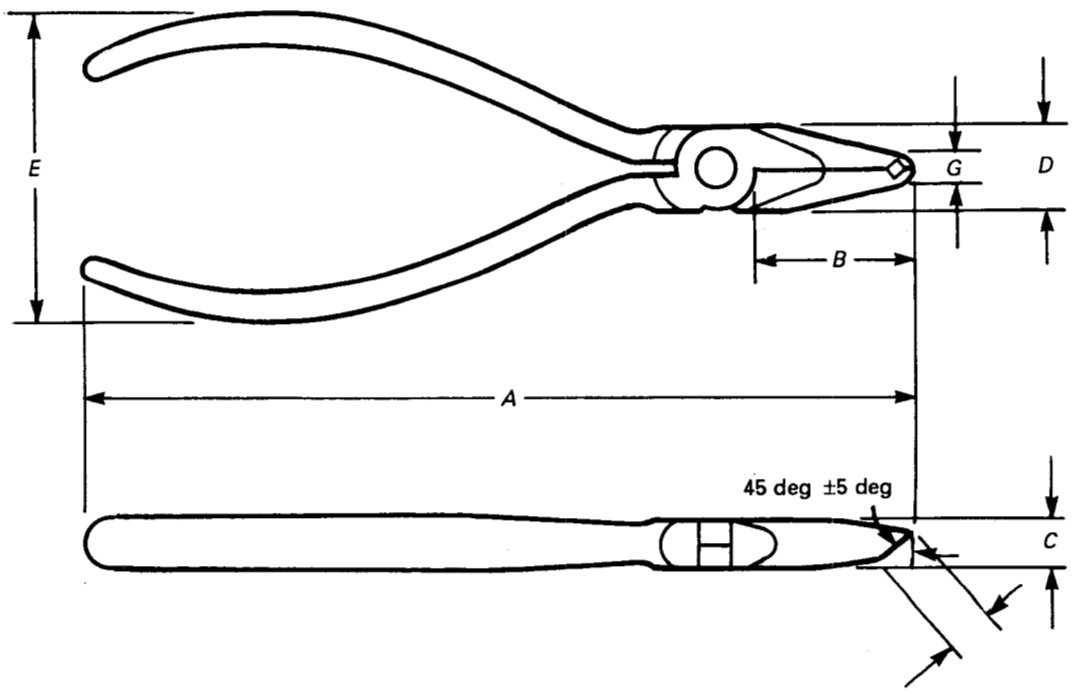

FIG. 8 TYPE IV, END CUTTERS (ANGLE)

Copyright ASME International
Provided by IHS under license with ASME
No reproduction or networking permitted without license from IHS
Not for Resale

ASME Services

ASME is committed to developing and delivering technical information. At ASME's Information Central, we make every effort to answer your questions and expedite your orders. Our representatives are ready to assist you in the following areas:

ASME Press
Codes & Standards
Credit Card Orders
IMechE Publications
Meetings & Conferences
Member Dues Status
Member Services & Benefits
Other ASME Programs
Payment Inquiries
Professional Development
Short Courses
Publications
Public Information
Self-Study Courses
Shipping Information
Subscriptions/Journals/Magazines
Symposia Volumes
Technical Papers

How can you reach us? It's easier than ever!

There are four options for making inquiries* or placing orders. Simply mail, phone, fax, or E-mail us and an Information Central representative will handle your request.

Mail	*Call Toll Free*	*Fax-24 hours*	*E-Mail-24 hours*
ASME	**US & Canada:** 800-THE-ASME	973-882-1717	Infocentral
22 Law Drive, Box 2900	(800-843-2763)	973-882-5155	@asme.org
Fairfield, New Jersey	**Mexico:** 95-800-THE-ASME		
07007-2900	(95-800-843-2763)		
	Universal: 973-882-1167		

* Information Central staff are not permitted to answer inquiries about the technical content of this code or standard. Information as to whether or not technical inquiries are issued to this code or standard is shown on the copyright page. All technical inquiries must be submitted in writing to the staff secretary. Additional procedures for inquiries may be listed within.

Copyright ASME International
Provided by IHS under license with ASME
No reproduction or networking permitted without license from IHS
Not for Resale

AMERICAN NATIONAL STANDARDS FOR HAND TOOLS

Socket Wrenches, Hand (Inch Series) B107.1-1993
Socket Wrenches, Extensions, Adaptors, and Universal Joints, Power Drive (Impact) (Inch Series) B107.2-1995
Socket Wrenches, Power Drive (Non-Impact) (Inch Series) ..... B107.3-1978(R1991)
Driving and Spindle Ends for Portable Hand, Impact, Air, and Electric Tools (Percussion Tools Excluded) B107.4M-1995
Socket Wrenches, Hand (Metric Series) B107.5M-1994
Wrenches, Box, Angled, Open End, Combination, Flare Nut, and Tappet (Inch Series) B107.6-1994
Adjustable Wrenches B107.8M-1996
Wrenches, Box, Angled, Open End, Combination, Flare Nut, and Tappet (Metric Series) B107.9M-1994
Handles and Attachments for Hand Socket Wrenches — Inch and Metric Series B107.10M-1996
Pliers, Diagonal Cutting, and Nippers, End Cutting B107.11M-1993
Nut Drivers (Spin Type, Screwdriver Grip) (Inch Series) B107.12-1997
Pliers — Long Nose, Long Reach B107.13M-1996
Hand Torque Tools B107.14M-1994
Flat Tip and Phillips Screwdrivers B107.15-1993
Shears (Metal Cutting, Hand) B107.16M-1998
Gages, Wrench Openings, Reference B107.17M-1997
Pliers (Wire Twister) B107.18M-1996
Pliers, Retaining Ring B107.19-1993
Pliers (Lineman's, Iron Worker's, Gas, Glass, and Fence) B107.20M-1992
Wrench, Crowfoot Attachments B107.21-1992
Electronic Cutters B107.22M-1998
Pliers, Multiple Position, Adjustable B107.23M-1997
Pliers — Performance Test Methods B107.25M-1996
Pliers, Multiple Position (Electrical Connector) B107.27-1996
Electronic Torque Instruments B107.28M-1997
Electronic Tester, Hand Torque Tools B107.29M-1997
Screwdrivers, Cross Tip Gaging B107.31M-1997
Socket Wrenches for Spark Plugs B107.34M-1997
Nut Drivers (Spin Type, Screwdriver Grip) (Metric Series) B107.35M-1997
Electronic Pliers B107.38M-1998
Nail Hammers — Safety Requirements B107.41M-1997
Hatchets: Safety Requirements B107.42M-1997
Wood-Splitting Wedges: Safety Requirements B107.43M-1997
Glaziers' Chisels and Wood Chisels: Safety Requirements B107.44M-1998
Ripping Chisels and Flooring/Electricians' Chisels: Safety Requirements B107.45M-1998
Stud, Screw, and Pipe Extractors: Safety Requirements B107.46M-1998
Metal Chisels: Safety Requirements B107.47M-1998
Metal Punches and Drift Pins: Safety Requirements B107.48M-1998
Nail Sets: Safety Requirements B107.49M-1998
Nail-Puller Bars: Safety Requirements B107.52M-1998
Ball Peen Hammers: Safety Requirements B107.53M-1998
Axes: Safety Requirements B107.55M-1998

The ASME Publications Catalog shows a complete list of all the Standards published by the Society. For a complimentary catalog, or the latest information about our publications, call 1-800-THE-ASME (1-800-843-2763).

Copyright ASME International
Provided by IHS under license with ASME
No reproduction or networking permitted without license from IHS
Not for Resale



ISBN 0-7918-2544-2

9 780791 825440

N12398

Copyright ASME International
Provided by IHS under license with ASME
No reproduction or networking permitted without license from IHS

Not for Resale