ASME B107.20-2004
(Revision of ASME B107.20M-1998)

Pliers: Lineman's, Iron Worker's, Gas, Glass, Fence, and Battery

AN AMERICAN NATIONAL STANDARD

The American Society of Mechanical Engineers

Copyright ASME International
Provided by IHS under license with ASME
No reproduction or networking permitted without license from IHS
Not for Resale

ASME B107.20-2004
(Revision of ASME B107.20M-1998)

Pliers: Lineman's, Iron Worker's, Gas, Glass, Fence, and Battery

AN AMERICAN NATIONAL STANDARD

The American Society of Mechanical Engineers
Three Park Avenue • New York, NY 10016

Copyright ASME International
Provided by IHS under license with ASME
No reproduction or networking permitted without license from IHS
Not for Resale

Date of Issuance: April 15, 2005

This Standard will be revised when the Society approves the issuance of a new edition. There will be no addenda issued to this edition.

ASME issues written replies to inquiries concerning interpretations of technical aspects of this Standard. Interpretations are published on the ASME Web site under the Committee Pages at http://www.asme.org/codes/ as they are issued.

ASME is the registered trademark of The American Society of Mechanical Engineers.

This code or standard was developed under procedures accredited as meeting the criteria for American National Standards. The Standards Committee that approved the code or standard was balanced to assure that individuals from competent and concerned interests have had an opportunity to participate. The proposed code or standard was made available for public review and comment that provides an opportunity for additional public input from industry, academia, regulatory agencies, and the public-at-large.

ASME does not "approve," "rate," or "endorse" any item, construction, proprietary device, or activity.

ASME does not take any position with respect to the validity of any patent rights asserted in connection with any items mentioned in this document, and does not undertake to insure anyone utilizing a standard against liability for infringement of any applicable letters patent, nor assume any such liability. Users of a code or standard are expressly advised that determination of the validity of any such patent rights, and the risk of infringement of such rights, is entirely their own responsibility.

Participation by federal agency representative(s) or person(s) affiliated with industry is not to be interpreted as government or industry endorsement of this code or standard.

ASME accepts responsibility for only those interpretations of this document issued in accordance with the established ASME procedures and policies, which precludes the issuance of interpretations by individuals.

No part of this document may be reproduced in any form,
in an electronic retrieval system or otherwise,
without the prior written permission of the publisher.

The American Society of Mechanical Engineers
Three Park Avenue, New York, NY 10016-5990

Copyright © 2005 by
THE AMERICAN SOCIETY OF MECHANICAL ENGINEERS
All rights reserved
Printed in U.S.A.

Copyright ASME International
Provided by IHS under license with ASME
No reproduction or networking permitted without license from IHS

Not for Resale

CONTENTS

Foreword iv
Committee Roster v
Correspondence With the B107 Committee vi

1 Scope 1

2 Classifications 1

3 References 1

4 Definitions 1

5 Requirements 1

6 Tests 10

7 Safety Requirements and Limitations of Use 11

8 Designations 11

Figures

1 Type I, Class 1, Lineman's, Square Head 2
2 Type I, Class 2, Lineman's, Round Head 2
3 Type I, Class 3, Lineman's, Square Head With Wire Stripper 3
4 Type III, Class 1, Iron Worker's, Square Head 4
5 Type III, Class 2, Iron Worker's, Round Head 4
6 Type IV, Combination Jaw 5
7 Type V, Gas 7
8 Type VI, Glass 8
9 Type VII, Fence 9
10 Type VIII, Battery 10

Tables

1 Types I and III, Lineman's and Iron Worker's 4
2 Type IV, Combination Jaw 5
3 Type V, Gas 7
4 Type VI, Glass 8
5 Type VII, Fence 9
6 Type VIII, Battery 10
7 Allowable Permanent Set for Pliers 11
8 Steel Wire Sizes and Test Loads for Wire Cut Test 11

Copyright ASME International
Provided by IHS under license with ASME
No reproduction or networking permitted without license from IHS
Not for Resale

FOREWORD

The American National Standards Committee B107, Socket Wrenches and Drives, under sponsorship of The American Society of Mechanical Engineers, was reorganized as an ASME Standards Committee and its title was changed to Hand Tools and Accessories. In 1996, its scope was expanded to address safety considerations.

The purposes of this Standard are to define performance and safety requirements specifically applicable to lineman's, iron worker's, gas, glass, fence, and battery pliers and to specify test methods to evaluate performance relating to the defined requirements.

Members of the Hand Tools Institute Pliers Standards Committee have been major contributors to the development of this Standard in their committee work, their knowledge of the products, and their active efforts in the promotion of the adoption of this Standard.

This Standard is a revision of ASME B107.20M-1998, Pliers (Lineman's, Iron Worker's, Gas, Glass, Fence, and Battery). Principal changes in this edition of the Standard are the inclusion of safety considerations and the relocation of Type, Class, and Style provisions to the design requirements section. Type II Hi-Leverage Pliers are not distinctly described, as the requirements for these pliers are the same as for Type I. Updated finish requirements and dimensional data are included.

The format of this Standard is in accordance with *The ASME Codes & Standards Writing Guide 2000*. Requests for interpretations of technical requirements, and suggestions for the improvement of this Standard, should be addressed to The American Society of Mechanical Engineers, Secretary, B107 Standards Committee, Three Park Avenue, New York, NY 10016-5990.

The requirements of this Standard become effective at the time of publication. ASME B107.20-2004 was approved as an American National Standard on October 5, 2004.

Copyright ASME International
Provided by IHS under license with ASME
No reproduction or networking permitted without license from IHS
Not for Resale

ASME B107 STANDARDS COMMITTEE
Hand Tools and Accessories

(The following is the roster of the Committee at the time of approval of this Standard.)

OFFICERS

G. E. Olson, *Chair*
W. T. Pagac, *Vice Chair*
J. H. Karian, *Secretary*

COMMITTEE PERSONNEL

J. D. Davidson, Sears Roebuck and Co.
P. A. Desmarais, Danaher Tool Group
J. S. Foote, Trade Association Management, Inc.
A. Garg, Stanley Works
R. A. Goldmann II, Klein Tools, Inc.
A. Herskovitz, Consultant
J. H. Karian, The American Society of Mechanical Engineers
D. S. McKittrick, Western Forge Corp.
G. E. Olson, Gene Olson Engineering Consultant, Ltd.
W. T. Pagac, Snap-on Tools
D. M. Eggert, *Alternate*, Snap-on Tools
J. M. Ster, General Services Administration
L. W. Fahlstrom, *Alternate*, General Services Administration
R. B. Wright, Wright Tool Co.
W. C. Snyder, *Alternate*, Wright Tool Co.

SUBCOMMITEE 5 — PLIERS

D. S. McKittrick, *Chair*, Western Forge Corp.
J. D. Davidson, Sears Roebuck and Co.
R. A. Goldmann II, Klein Tools, Inc.
J. M. Ster, General Services Administration

--`,,```,,,,````-`-`,,`,,`,`,,`---

Copyright ASME International
Provided by IHS under license with ASME
No reproduction or networking permitted without license from IHS

Not for Resale

CORRESPONDENCE WITH THE B107 COMMITTEE

General. ASME Standards are developed and maintained with the intent to represent the consensus of concerned interests. As such, users of this Standard may interact with the Committee by requesting interpretations, proposing revisions, and attending Committee meetings. Correspondence should be addressed to:

Secretary, B107 Standards Committee
The American Society of Mechanical Engineers
Three Park Avenue
New York, NY 10016-5990

Proposing Revisions. Revisions are made periodically to the Standard to incorporate changes that appear necessary or desirable, as demonstrated by the experience gained from the application of the Standard. Approved revisions will be published periodically.

The Committee welcomes proposals for revisions to this Standard. Such proposals should be as specific as possible, citing the paragraph number(s), the proposed wording, and a detailed description of the reasons for the proposal, including any pertinent documentation.

Interpretations. Upon request, the B107 Committee will render an interpretation of any requirement of the Standard. Interpretations can only be rendered in response to a written request sent to the Secretary of the B107 Standards Committee.

The request for interpretation should be clear and unambiguous. It is further recommended that the inquirer submit his/her request in the following format:

Subject:	Cite the applicable paragraph number(s) and the topic of the inquiry.
Edition:	Cite the applicable edition of the Standard for which the interpretation is being requested.
Question:	Phrase the question as a request for an interpretation of a specific requirement suitable for general understanding and use, not as a request for an approval of a proprietary design or situation. The inquirer may also include any plans or drawings, which are necessary to explain the question; however, they should not contain proprietary names or information.

Requests that are not in this format may be rewritten in the appropriate format by the Committee prior to being answered, which may inadvertently change the intent of the original request.

ASME procedures provide for reconsideration of any interpretation when or if additional information that might affect an interpretation is available. Further, persons aggrieved by an interpretation may appeal to the cognizant ASME Committee or Subcommittee. ASME does not "approve," "certify," "rate," or "endorse" any item, construction, proprietary device, or activity.

Attending Committee Meetings. The B107 Standards Committee regularly holds meetings, which are open to the public. Persons wishing to attend any meeting should contact the Secretary of the B107 Standards Committee.

Copyright ASME International
Provided by IHS under license with ASME
No reproduction or networking permitted without license from IHS
Not for Resale

PLIERS: LINEMAN'S, IRON WORKER'S, GAS, GLASS, FENCE, AND BATTERY

1 SCOPE

This Standard provides performance and safety requirements for pliers having gripping surfaces and/or cutting edges. Inclusion of dimensional data in this Standard does not mean that all products described herein are stock production sizes. Consumers should consult with manufacturers concerning a list of stock production sizes.

This Standard may be used as a guide by state authorities or other regulatory bodies in the formulation of laws or regulations. It is also intended for voluntary use by establishments that use or manufacture the covered tools.

2 CLASSIFICATIONS

Type I: Lineman's
Class 1: Square head
Class 2: Round head
Class 3: Square head with wire stripper
Type II: Discontinued (designation retained for continuity with B107.20M-1998)
Class 1: Square head
Class 2: Round head
Class 3: Square head with wire stripper
Type III: Iron worker's
Class 1: Square head
Class 2: Round head
Type IV: Combination jaw
Type V: Gas
Type VI: Glass
Type VII: Fence
Type VIII: Battery

3 REFERENCES

The following is a list of publications referenced in this Standard.

ASME B107.25-2002, Pliers: Performance Test Methods

Publisher: The American Society of Mechanical Engineers (ASME), Three Park Avenue, New York, NY 10016-5990; Order Department: 22 Law Drive, Box 2300, Fairfield, NJ 07007-2300

Guide to Hand Tools — Selection, Safety Tips, Proper Use and Care

Publisher: Hand Tools Institute (HTI), 25 North Broadway, Tarrytown, NY 10591

4 DEFINITIONS

button cutter: cutter located on the joint of Types IV and VII pliers for cutting wire.

crusher: parallel flat areas on the inside handle surfaces near the pivot, designed for crushing.

tape-pulling area: gap between handle and joint.

Definitions of other terms used within this Standard may be found in ASME B107.25.

5 REQUIREMENTS

The illustrations herein are descriptive and not restrictive, and are not intended to preclude the manufacture of pliers that are otherwise in accordance with this Standard. All figures are shown without comfort grips or springs.

5.1 Design

Pliers shall be similar to the figure to which reference is made and shall be proportioned in all parts so as to be strong, durable, and easy to operate. Pliers shall pass applicable tests without cracking or breaking.

5.1.1 Type I, Lineman's. Jaws shall have cutting edges on one side near the joint end. The cutting edges shall extend approximately one-half the length of the jaws. The remaining portions of the jaws shall have straight surfaces, scored with a straight or uniform diamond-shaped pattern. There shall be a recess in the jaws behind the side cutter to provide satisfactory cutting clearance. The crusher surfaces may be smooth or scored. With the pliers closed, the ends of the jaws shall not touch, but shall have a maximum gap of 0.025 in. on nominal size 6 in. and 7 in. pliers, and 0.040 in. on nominal size 8 in. and 9 in. pliers (refer to dimension *G* on Figs. 1, 2, 3, 4, and 5).

5.1.1.1 Type I, Class 1, Lineman's, Square Head. Pliers shall have square heads and shall be similar to Fig. 1. They shall conform to dimensions shown in Fig. 1 and in Table 1.

Copyright ASME International
Provided by IHS under license with ASME
No reproduction or networking permitted without license from IHS
Not for Resale

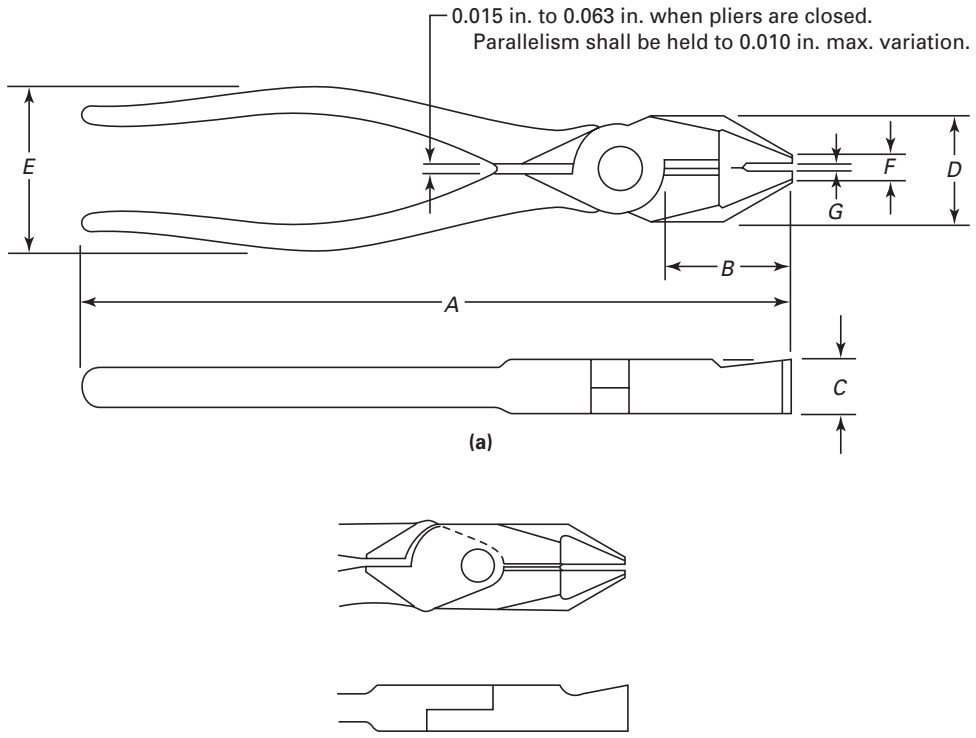

(a)

(b) Alternate Head Design

Fig. 1 Type I, Class 1, Lineman's, Square Head

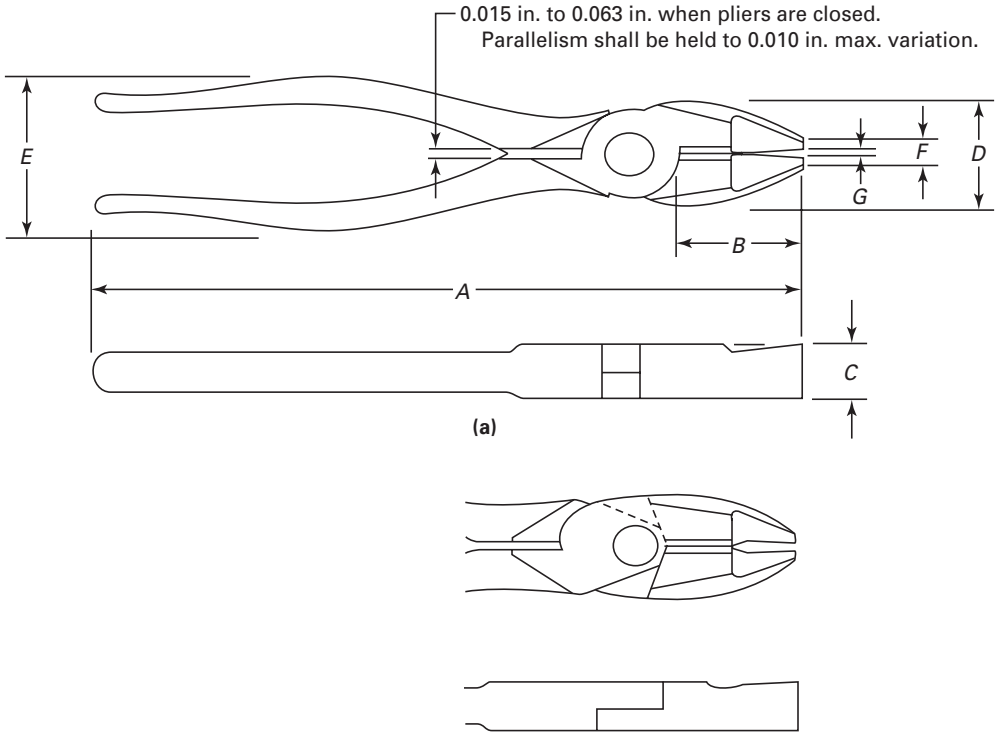

(a)

(b) Alternate Head Design

Fig. 2 Type I, Class 2, Lineman's, Round Head

Copyright ASME International
Provided by IHS under license with ASME
No reproduction or networking permitted without license from IHS
Not for Resale

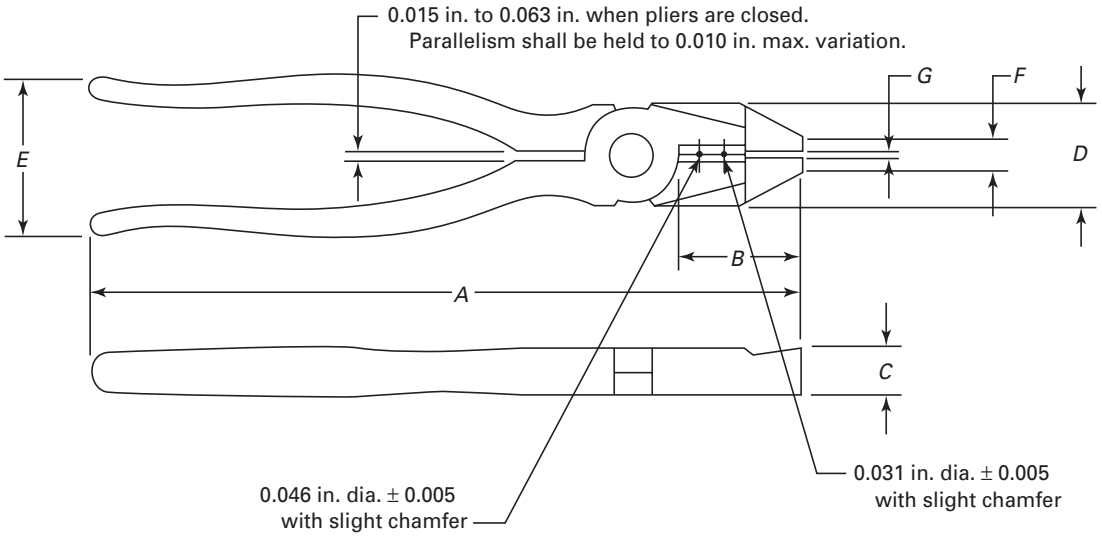

(a)

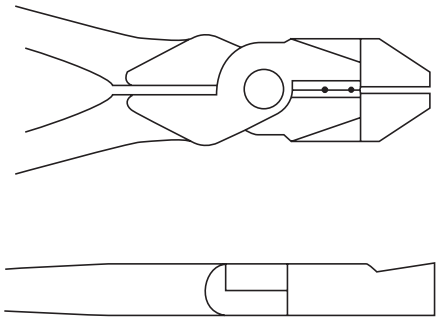

(b) Alternate Head Design

Fig. 3 Type I, Class 3, Lineman's, Square Head With Wire Stripper

Copyright ASME International
Provided by IHS under license with ASME
No reproduction or networking permitted without license from IHS
Not for Resale

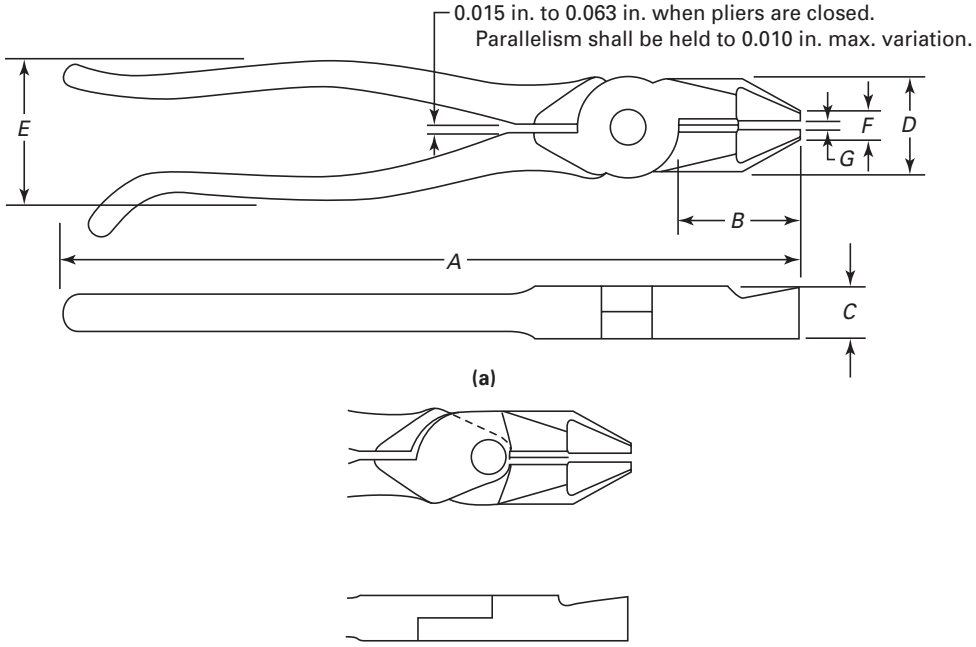

(a)

(b) Alternate Head Design

Fig. 4 Type III, Class 1, Iron Worker's, Square Head

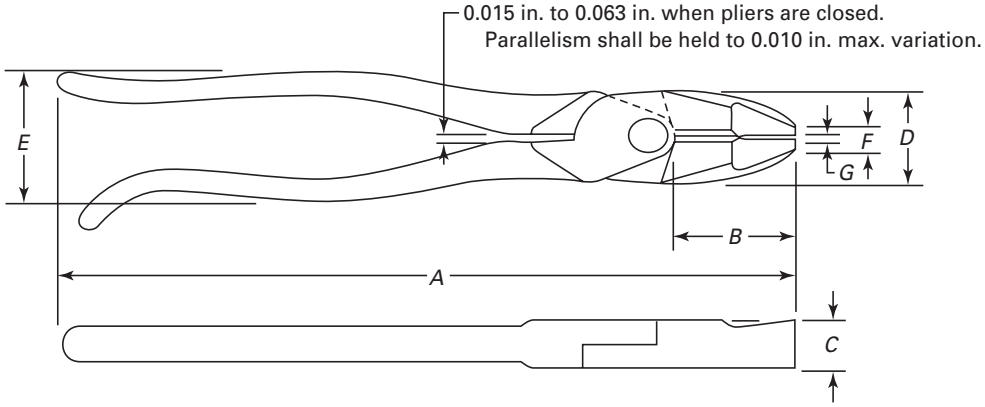

Fig. 5 Type III, Class 2, Iron Worker's, Round Head

Table 1 Types I and III, Lineman's and Iron Worker's

Nominal Size, in.	Overall Length, *A* ±0.50 in.	Jaw Length, *B* ±0.25 in.	Joint Thickness, *C* ±0.13 in.	Jaw Width, *D* +0.18 in., −0.12 in.	Handle Span, *E* ±0.25 in.	Nose Width, *F* ±0.062 in.	Min. Jaw Opening, in.
6	6.50	1.25	0.50	0.88	1.75	0.219	0.625
7	7.50	1.25	0.50	0.97	1.75	0.219	0.625
8	8.50	1.50	0.62	1.28	1.88	0.281	0.875
9	9.50	1.56	0.63	1.28	1.88	0.281	0.875

GENERAL NOTE: The *A* and *E* dimensions in the table are without comfort grips. Comfort grips shall not increase dimension *A* by more than 0.25 in. and dimension *E* by more than 0.50 in.

Copyright ASME International
Provided by IHS under license with ASME
No reproduction or networking permitted without license from IHS
Not for Resale

Table 2 Type IV, Combination Jaw

Nominal Size, in.	Overall Length, *A* ±0.50 in.	Jaw Length, *B* ±0.25 in.	Joint Thickness, *C* ±0.125 in.	Jaw Width, *D* ±0.19 in.	Handle Span, *E* ±0.25 in.	Nose Width, *F* +0.19 in., −0.07 in.	Min. Jaw Opening, in.
8	8.00	1.38	0.625	1.19	1.88	0.25	0.875
$10\frac{1}{2}$	10.50	1.50	0.625	1.38	1.94	0.31	0.875

GENERAL NOTE: The *A* and *E* dimensions in the table are without comfort grips. Comfort grips shall not increase dimension *A* by more than 0.25 in. and dimension *E* by more than 0.50 in.

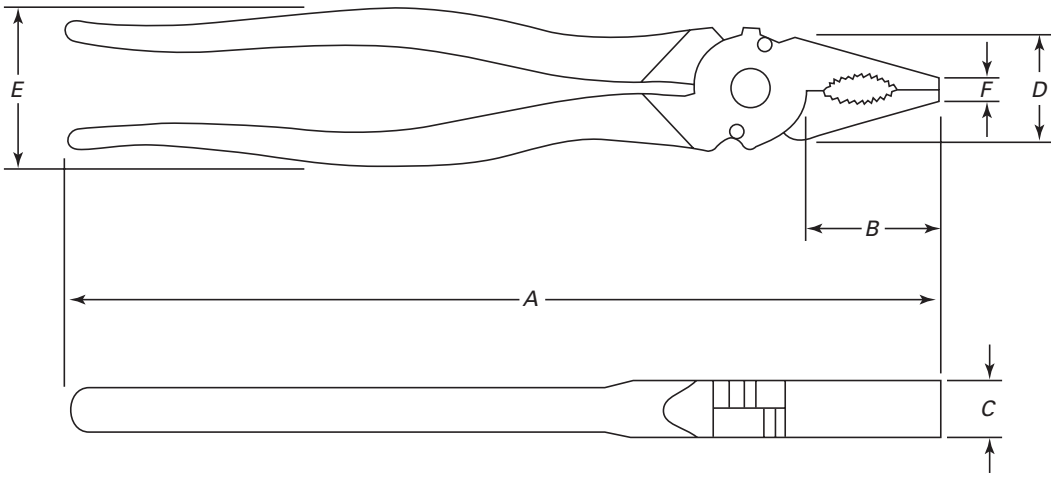

Fig. 6 Type IV, Combination Jaw

5.1.1.2 Type I, Class 2, Lineman's, Round Head. Pliers shall have round heads and shall be similar to Fig. 2. They shall conform to dimensions shown in Fig. 2 and in Table 1.

5.1.1.3 Type I, Class 3, Lineman's, Square Head With Wire Stripper. Pliers shall have square heads and two insulation stripping holes in the cutting edges; they shall be similar to Fig. 3. They shall conform to dimensions shown in Fig. 3 and in Table 1.

5.1.2 Type III, Iron Worker's. Pliers jaws shall have cutting edges on one side near the joint end. The cutting edges shall extend up to a recess in the jaws behind the side cutter to provide satisfactory cutting clearance. The remaining portion of the jaws shall have scored surfaces. The crusher surfaces may be smooth or scored. With the pliers closed, the ends of the jaws shall not touch, but shall leave a clearance that will permit gripping 0.025 in. wire firmly on nominal size 6 in. and 7 in. pliers, and 0.040 in. wire firmly on nominal size 8 in. and 9 in. pliers (refer to dimension *G* on appropriate figures). One handle end shall be bent to prevent the pliers from slipping through the hand during normal usage. Pliers may be supplied with a spring.

5.1.2.1 Type III, Class 1, Iron Worker's, Square Head. Pliers shall be similar to Fig. 4 and shall conform to dimensions shown in Fig. 4 and in Table 1.

5.1.2.2 Type III, Class 2, Iron Worker's, Round Head. Pliers shall be similar to Fig. 5 and shall conform to dimensions shown in Fig. 5 and in Table 1.

5.1.3 Type IV, Combination Jaw. Pliers shall conform to the requirements shown in Table 2, and shall be similar to Fig. 6. Pliers shall have combination jaws and at least two wire cutters. Pliers shall be of flat-nose construction. Combination jaws shall have straight scored gripping surfaces at the outer end, and curved scored gripping surfaces closer to the joint. Curved surfaces shall grip a 0.25 in. diameter rod on nominal size 8 in. pliers, and 0.31 in. diameter rod on nominal size $10\frac{1}{2}$ in. pliers,

Copyright ASME International
Provided by IHS under license with ASME
No reproduction or networking permitted without license from IHS
Not for Resale

when the outermost end of the jaws is opened not more than 0.10 in. The crusher surfaces may be smooth or scored.

5.1.4 Type V, Gas. Pliers shall conform to the requirements shown in Table 3 and shall be similar to Fig. 7. Jaws shall be of uniform width, and the outer end or nose shall be rounded. The pliers shall have a central longitudinal grip at the outer end of the jaw, and two elliptical transverse grips in the jaw body. The gripping surfaces shall have sharp pointed teeth. The longitudinal grip shall be suitable for gripping both flat and round objects. With the outermost ends of the jaws opened not more than 0.18 in., the smaller transverse grip shall securely hold a 0.34 in. diameter rod, and the larger transverse grip shall securely hold a 0.44 in. diameter rod, individually. The larger transverse grip shall have a capacity for holding a rod at least 1.50 in. diameter.

5.1.5 Type VI, Glass. Type VI pliers shall conform to the requirements shown in Table 4 and shall be similar to Fig. 8. Pliers shall be suitable for firmly grasping plate glass along the full width of the jaw. With the pliers in a closed position, the jaws shall contact each other only at their outermost end. With the jaws of the pliers opened so that the jaw surfaces are parallel, the jaw opening shall be not less than 0.44 in. and not more than 0.50 in. The gripping surfaces of the jaws shall be smooth and without scoring.

5.1.6 Type VII, Fence. Type VII pliers shall conform to the requirements shown in Table 5 and shall be similar to Fig. 9. Pliers shall be suitable for maintaining and installing wire fence on metal or wood posts. Pliers shall have a hammer head on one jaw and a starting-and-pulling point on the other. Pliers shall be provided with two side wire cutters, and two transverse holes in the jaws for twisting and splicing wire. The crusher shall be scored.

5.1.7 Type VIII, Battery. Pliers shall conform to the requirements shown in Table 6 and shall be similar to Fig. 10. Gripping surfaces shall be deeply scored the full length of the jaws. Jaws shall open and close in a uniform manner. Jaws shall be offset 15 deg to 40 deg as measured from the centerline of the jaws and the centerline of the handles. With the pliers gripping a 0.62 in. diameter rod, the maximum distance between the outsides of the handles at the gripping portion shall not exceed 4 in. (Pliers with a multiposition slip joint that otherwise meet the preceding requirements are a suitable alternative.)

5.2 Materials

The materials used in the manufacture of pliers shall be such as to produce pliers conforming to the requirements specified herein.

5.3 Finish

Surfaces shall have a rust-preventive treatment and be essentially free from pits, nodules, burrs, cracks, and other conditions that would adversely affect the performance or safe use of pliers.

5.4 Marking

Pliers shall be marked in a plain and permanent manner with the manufacturer's name or with a trademark of such known character that the source of manufacture may be readily determined. The marking shall be as permanent as the normal life expectancy of the pliers to which it is applied (provided the surface to which it was applied has not been subjected to a fretting or abrading action) and be capable of withstanding the cleaning procedures normally experienced during its intended use.

5.5 Cutting

Pliers with cutting edges shall cut wire per para. 6.1.1. Following the wire cut test, pliers, except Types IV and VII (which have no paper cut requirements), shall cut paper per para. 6.1.2.

5.6 Handles

5.6.1 Characteristics. Handles shall be shaped to afford a comfortable grip. Handle surfaces shall be free from rough edges and sharp corners. Handles shall not contact each other when jaws are in a closed position. Hand gripping surfaces shall be smooth, knurled, impressed, or furnished with comfort grips. Handles shall be hardened to 35 HRC to 50 HRC.

5.6.2 Set. Permanent set of the handles for all types shall not exceed the amount specified in Table 7 for the individual types and sizes of pliers when subjected to the handle load test specified in para. 6.3.

5.6.3 Comfort Grips. When comfort grips are furnished, they shall be made of a polymer of rubber, plastic, or other suitable material capable of withstanding long, hard usage without deteriorating or rubbing off, and shall pass the solvent resistance test specified in para. 6.4. Comfort grips shall remain permanently attached under normal use.

WARNING: Comfort grips are not intended to give any degree of protection against electrical shock, and shall not be used on live electrical circuits.

5.7 Joint

Pliers shall be joined in a permanent manner with a fastener. The joint shall assure uniform smooth movement with minimal looseness and sideplay when

Copyright ASME International
Provided by IHS under license with ASME
No reproduction or networking permitted without license from IHS
Not for Resale

Table 3 Type V, Gas

Nominal Size, in.	Overall Length, *A* ±0.50 in.	Jaw Length, *B* ±0.25 in.	Joint Thickness, *C* ±0.062 in.	Jaw Width, *D* ±0.125 in.	Handle Span, *E* ±0.375 in.	Min. Jaw Opening, in.
$6^1/_2$	6.50	1.06	0.312	0.812	1.875	0.875
$8^1/_2$	8.50	2.00	0.437	1.062	1.750	1.375
10	10.00	2.13	0.625	1.187	1.500	1.375

GENERAL NOTE: The *A* and *E* dimensions in the table are without comfort grips. Comfort grips shall not increase dimension *A* by more than 0.25 in. and dimension *E* by more than 0.50 in.

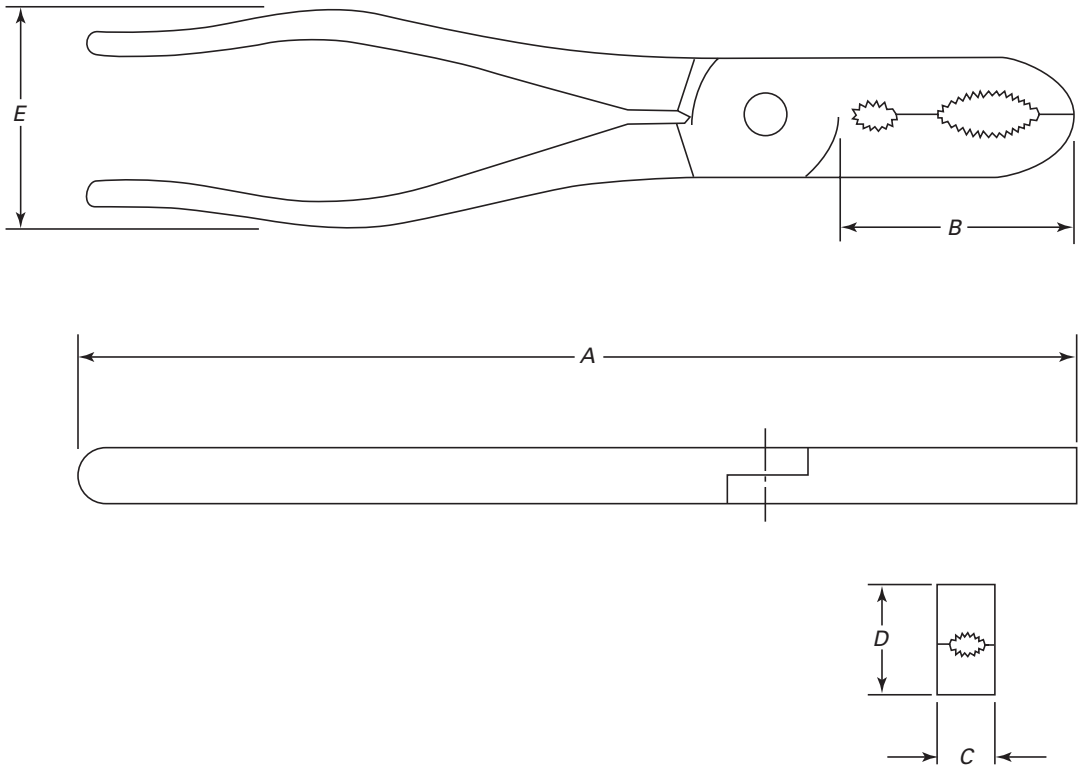

Fig. 7 Type V, Gas

Copyright ASME International
Provided by IHS under license with ASME
No reproduction or networking permitted without license from IHS
Not for Resale

Table 4 Type VI, Glass

Nominal Size, in.	Overall Length, *A* ±0.50 in.	Jaw Length, *B* ±0.25 in.	Joint Thickness, *C* ±0.13 in.	Jaw Width, *D* ±0.13 in.	Handle Span, *E* ±0.25 in.	Nose Thickness, *F* ±0.38 in.	Nose Width, *G* ±0.25 in.	Min. Jaw Opening, in.
7	7.00	1.13	0.50	1.13	1.88	0.25	0.88	1
8	8.00	1.38	0.50	1.25	1.88	0.31	0.88	1

GENERAL NOTE: The *A* and *E* dimensions in the table are without comfort grips. Comfort grips shall not increase dimension *A* by more than 0.25 in. and dimension *E* by more than 0.50 in.

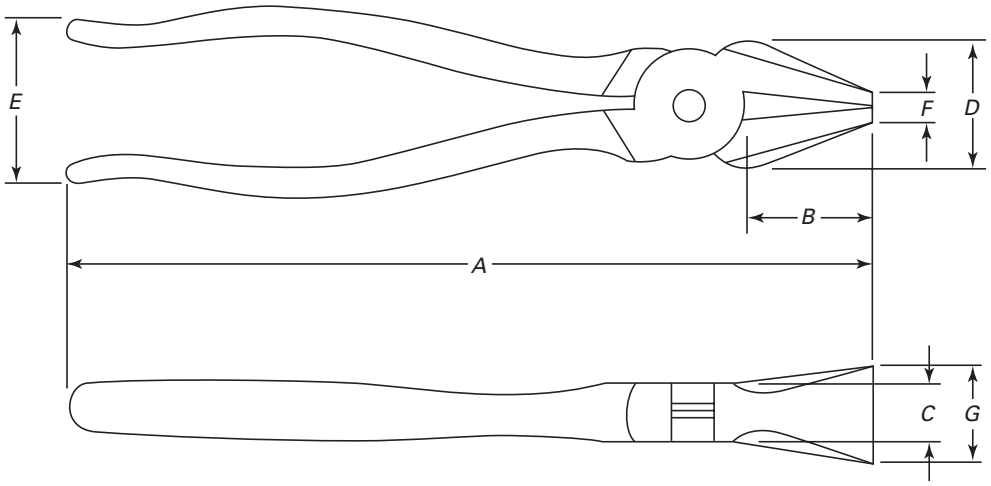

Fig. 8 Type VI, Glass

Copyright ASME International
Provided by IHS under license with ASME
No reproduction or networking permitted without license from IHS
Not for Resale

Table 5 Type VII, Fence

Nominal Size, in.	Overall Length, *A* ±0.50 in.	Jaw Length, *B* ±0.25 in.	Joint Thickness, *C* ±0.06 in.	Head Width, *D* ±0.50 in.	Handle Span, *E* ±0.25 in.
10	10.38	0.75	0.56	3.25	2.00

GENERAL NOTE: The *A* and *E* dimensions in the table are without comfort grips. Comfort grips shall not increase dimension *A* by more than 0.25 in. and dimension *E* by more than 0.50 in.

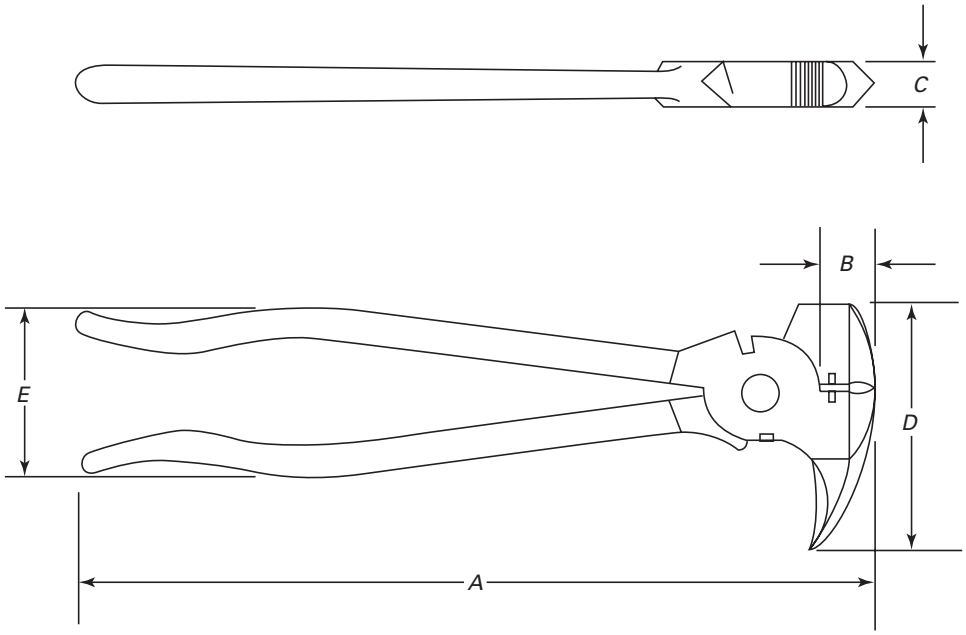

(a)

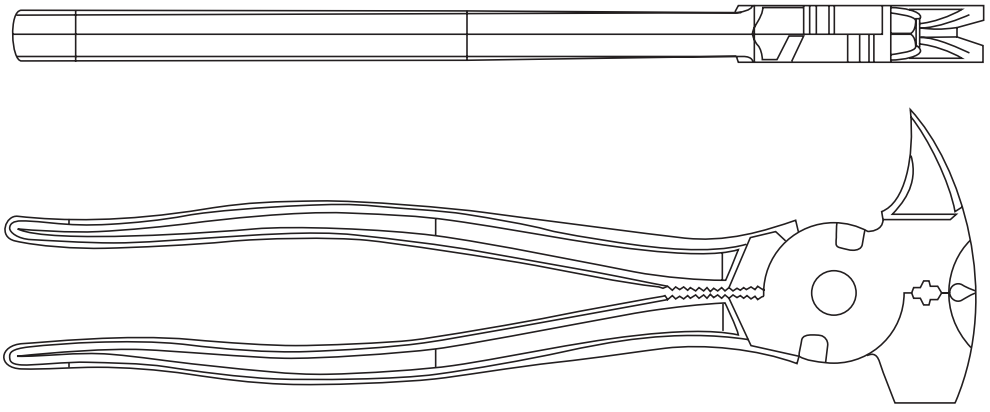

(b) Alternate Head Design

Fig. 9 Type VII, Fence

Copyright ASME International
Provided by IHS under license with ASME
No reproduction or networking permitted without license from IHS
Not for Resale

Table 6 Type VIII, Battery

Nominal Size, in.	Overall Length, *A* ±0.50 in.	Jaw Length, *B* ±0.25 in.	Jaw Tip Thickness, *C* ±0.06 in.	Joint Thickness, *D* ±0.13 in.	Min. Jaw Opening, in.
7	7.50	1.38	0.22	0.38	0.63

GENERAL NOTE: The *A* and *E* dimensions in the table are without comfort grips. Comfort grips shall not increase dimension *A* by more than 0.25 in.

opening the jaw as specified in para. 5.8.1 and shall not loosen or require adjustment. Fastener hardness shall be from 25 HRC to 50 HRC except when case-hardened, a maximum hardness equivalent to 60 HRC shall be permitted.

5.8 Jaws

5.8.1 Jaw Opening. The end of the jaws shall open to the respective minimum jaw opening specified in the applicable tables for the individual types and sizes of pliers. It shall be possible to open the jaws to the minimum jaw opening by the application of a force to the handles of the magnitude specified and in the manner specified in para. 6.5. Beyond the minimum jaw opening, the jaws may be opened at increased loads until the positive stop of the tool is engaged.

5.8.2 Jaw Hardness. The jaw area shall have a hardness of 35 HRC to 65 HRC. On pliers with cutting edges, the jaw hardness, within 0.062 in. of the cutting edge, shall have a hardness from 55 HRC to 65 HRC. On Types IV and VII pliers, the button cutters shall have a hardness from 45 HRC to 65 HRC.

5.9 Springs

When a spring (or springs) is furnished, it shall be capable of opening the pliers jaws to the minimum jaw opening as specified in the applicable tables for the individual types and sizes of pliers.

6 TESTS

SAFETY WARNING: Many tests required herein are inherently hazardous, and adequate safeguards for personnel and property shall be employed in conducting such tests.

6.1 Cut Test

6.1.1 Steel Wire Cut Test. Pliers shall cut steel wire specified in Table 8. Three cuts shall be made at the joint end of the cutting edges, and shall not exceed the applicable test loads in Table 8 for individual types and sizes of pliers. Wire cut test shall be conducted in accordance with ASME B107.25, para. 5.2.1.

6.1.2 Paper Cut Test. Paper cut test shall be conducted in accordance with ASME B107.25, para. 5.2.2.

6.2 Hardness Test

Hardness shall be tested in accordance with ASME B107.25, para. 5.3.

6.3 Handle Load Test

Handle load test shall be conducted in accordance with ASME B107.25, para. 5.1. Pliers shall be tested

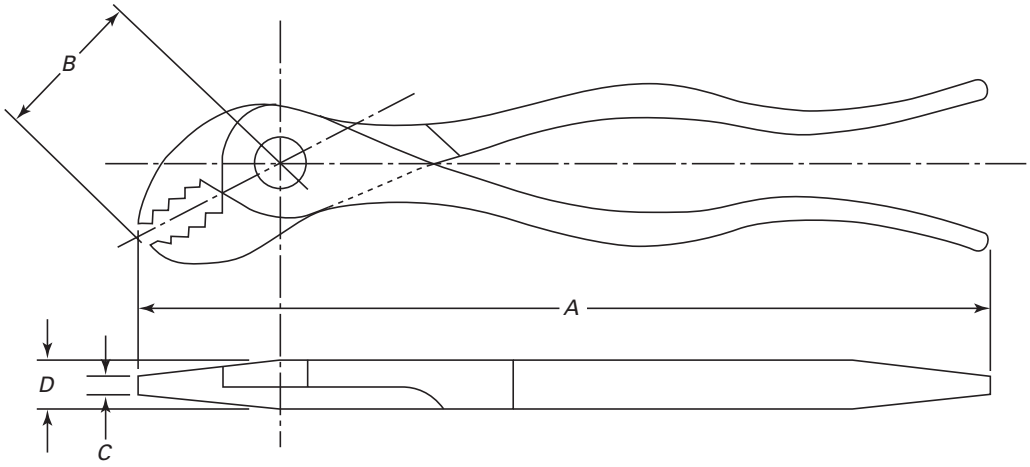

Fig. 10 Type VIII, Battery

Copyright ASME International
Provided by IHS under license with ASME
No reproduction or networking permitted without license from IHS
Not for Resale

Table 7 Allowable Permanent Set for Pliers

Nominal Size		Test Load, lbf-in.	Maximum Permanent Set, in.	Insert Thickness, ±0.010 in.
Type	in.			
I and III	6	600	0.03	0.125
	7	600	0.03	0.125
	8	1,020	0.06	0.125
	9	1,020	0.06	0.125
IV	8	1,275	0.06	0.125
	$10\frac{1}{2}$	1,825	0.06	0.125
				Dia., in.
V	6	800	0.06	0.500
	8	1,020	0.06	0.750
	10	1,400	0.06	1.000
VI	8	750	0.13	0.437
VII	10	1,275	0.06	0.125
VIII	7	200	0.13	0.500

without comfort grips. Load shall be applied at the point of maximum handle curvature (normal gripping position). Outermost end of the jaws shall grip approximately 0.13 in. of a steel insert of thickness specified in Table 7. Permanent set of the handles shall not exceed the applicable values in Table 7.

6.4 Solvent Resistance Test

Solvent resistance test shall be conducted in accordance with ASME B107.25, para. 5.5.

6.5 Jaw Opening Test

Jaw opening test shall be conducted in accordance with ASME B107.25, para. 5.4.2. The force required to open the jaws shall not be greater than 3 lbf for all pliers.

7 SAFETY REQUIREMENTS AND LIMITATIONS OF USE

Instructors and employers shall stress proper use and safety in the use of pliers, information about which can be found in the HTI publication, *Guide to Hand Tools — Selection Safety Tips, Proper Use and Care.*

8 DESIGNATIONS

Purchasers should select the options permitted herein, and include the following information in procurement documents:

(*a*) Type and Class of pliers required
(*b*) nominal size of pliers required
(*c*) when comfort grips are required
(*d*) when springs are required

EXAMPLE: Lineman's pliers, Type I, Class 3, 8 in., no comfort grips, no springs.

Table 8 Steel Wire Sizes and Test Loads for Wire Cut Test

Nominal Size			Wire Diameter, ±0.002 in.	Wire Tensile Strength Minimum, ksi	Maximum Test Loads, lbf-in.
Type	in.	Number of Cuts			
I and III	6	3	0.080	180	600
	7	3	0.080	180	875
	8	3	0.091	180	1,020
	9	3	0.091	180	1,020
IV	8	3	0.080	180	500
	$10\frac{1}{2}$	3	0.091	180	500
VII	10	3	0.091	120	1,275

Copyright ASME International
Provided by IHS under license with ASME
No reproduction or networking permitted without license from IHS
Not for Resale

Copyright ASME International
Provided by IHS under license with ASME
No reproduction or networking permitted without license from IHS
Not for Resale

AMERICAN NATIONAL STANDARDS FOR HAND TOOLS

Socket Wrenches, Hand (Inch Series) B107.1-2002
Socket Wrenches, Extensions, Adaptors, and Universal Joints, Power Drive (Impact) (Inch Series) B107.2-2002
Driving and Spindle Ends for Portable Hand, Impact, Air, and Electric Tools (Percussion Tools Excluded) B107.4M-1995
Socket Wrenches, Hand (Metric Series) B107.5M-2002
Adjustable Wrenches B107.8-2003
Handles and Attachments for Hand Socket Wrenches—Inch and Metric Series B107.10M-1996
Pliers: Diagonal Cutting and End Cutting B107.11-2002
Nutdrivers (Spin Type, Screwdriver Grip) (Inch Series) B107.12-2004
Pliers: Long Nose, Long Reach B107.13-2003
Hand Torque Tools B107.14M-1994
Flat Tip Screwdrivers B107.15-2002
Shears (Metal Cutting, Hand) B107.16M-1998 (R2004)
Gages, Wrench Openings, Reference B107.17M-1997
Pliers: Wire Twister B107.18-2003
Pliers: Retaining Ring B107.19-2004
Pliers: Lineman's, Iron Worker's, Gas, Glass, Fence, and Battery B107.20-2004
Wrench, Crowfoot Attachments B107.21-1998
Electronic Cutters B107.22M-1998
Pliers: Multiple Position, Adjustable B107.23-2004
Locking Pliers B107.24-2002
Pliers: Performance Test Methods B107.25-2002
Pliers: Multiple Position, Electrical Connector B107.27-2003
Electronic Torque Instruments B107.28M-1997
Electronic Tester, Hand Torque Tools B107.29M-1998
Cross Tip Screwdrivers B107.30-2002
Screwdrivers, Cross Tip Gaging B107.31M-1997
Socket Wrenches, Impact (Metric Series) B107.33M-2002
Socket Wrenches for Spark Plugs B107.34-2003
Nut Drivers (Spin Type, Screwdriver Grip) (Metric Series) B107.35M-1997
Pliers: Locking, Clamp, and Tubing Pinch-Off B107.36-2002
Pliers: Wire Cutters/Strippers B107.37-2003
Electronic Pliers B107.38M-1998
Nail Hammers: Safety Requirements B107.41-2004
Hatchets: Safety Requirements B107.42M-1997 (R2004)
Wood-Splitting Wedges B107.43-2002
Glaziers' Chisels and Wood Chisels B107.44-2002
Ripping Chisels and Flooring/Electricians' Chisels B107.45-2002
Stud, Screw, and Pipe Extractors: Safety Requirements B107.46-2004
Metal Chisels: Safety Requirements B107.47M-1998
Metal Punches and Drift Pins: Safety Requirements B107.48M-1998
Nail Sets: Safety Requirements B107.49M-1998
Brick Chisels and Brick Sets: Safety Requirements B107.50M-1998
Star Drills: Safety Requirements B107.51-2001
Nail-Puller Bars: Safety Requirements B107.52M-1998
Ball Peen Hammers: Safety Requirements B107.53-2004
Heavy Striking Tools: Safety Requirements B107.54-2001
Axes: Safety Requirements B107.55M-2002
Body Repair Hammers and Dolly Blocks:Safety Requirements B107.56-1999
Bricklayers' Hammers and Prospecting Picks: Safety Requirements B107.57-2001
Riveting, Scaling, and Tinner's Setting Hammers: Safety Requirements B107.58M-1998
Slugging and Striking Wrenches B107.59-2002
Pry Bars B107.60-2004
Wrenches B107.100-2002

The ASME Publications Catalog shows a complete list of all the Standards published by the Society. For a complimentary catalog, or the latest information about our publications, call 1-800-THE-ASME (1-800-843-2763).

Copyright ASME International
Provided by IHS under license with ASME
No reproduction or networking permitted without license from IHS

Not for Resale

ASME Services

ASME is committed to developing and delivering technical information. At ASME's Information Central, we make every effort to answer your questions and expedite your orders. Our representatives are ready to assist you in the following areas:

ASME Press
Codes & Standards
Credit Card Orders
IMechE Publications
Meetings & Conferences
Member Dues Status
Member Services & Benefits
Other ASME Programs
Payment Inquiries
Professional Development Short Courses
Publications
Public Information
Self-Study Courses
Shipping Information
Subscriptions/Journals/Magazines
Symposia Volumes
Technical Papers

How can you reach us? It's easier than ever!

There are four options for making inquiries* or placing orders. Simply mail, phone, fax, or E-mail us and an Information Central representative will handle your request.

Mail
ASME
22 Law Drive, Box 2900
Fairfield, New Jersey
07007-2900

Call Toll Free
US & Canada: 800-THE-ASME
(800-843-2763)
Mexico: 95-800-THE-ASME
(95-800-843-2763)
Universal: 973-882-1167

Fax – 24 hours
973-882-1717
973-882-5155

E-Mail – 24 hours
Infocentral@asme.org

* Information Central staff are not permitted to answer inquiries about the technical content of this code or standard. Information as to whether or not technical inquiries are issued to this code or standard is shown on the copyright page. All technical inquiries must be submitted in writing to the staff secretary. Additional procedures for inquiries may be listed within.

Copyright ASME International
Provided by IHS under license with ASME
No reproduction or networking permitted without license from IHS
Not for Resale

ASME B107.20-2004

ISBN 0-7918-2941-3





N11704

Copyright ASME International
Provided by IHS under license with ASME
No reproduction or networking permitted without license from IHS

Not for Resale