ASME B107.11-2002
(Revision of ASME B107.11M-1993)

PLIERS: DIAGONAL CUTTING AND END CUTTING

AN AMERICAN NATIONAL STANDARD

The American Society of Mechanical Engineers

Copyright ASME International
Provided by IHS under license with ASME
No reproduction or networking permitted without license from IHS

Not for Resale

The American Society of Mechanical Engineers

AN AMERICAN NATIONAL STANDARD

PLIERS: DIAGONAL CUTTING AND END CUTTING

ASME B107.11-2002
(Revision of ASME B107.11M-1993)

Copyright ASME International
Provided by IHS under license with ASME
No reproduction or networking permitted without license from IHS

Not for Resale

Date of Issuance: December 31, 2002

This Standard will be revised when the Society approves the issuance of a new edition. There will be no addenda issued to this edition.

ASME issues written replies to inquiries concerning interpretations of technical aspects of this Standard. Interpretations are published on the ASME Web site under the Committee Pages at http://www.asme.org/codes/ as they are issued.

ASME is the registered trademark of The American Society of Mechanical Engineers.

This code or standard was developed under procedures accredited as meeting the criteria for American National Standards. The Standards Committee that approved the code or standard was balanced to assure that individuals from competent and concerned interests have had an opportunity to participate. The proposed code or standard was made available for public review and comment that provides an opportunity for additional public input from industry, academia, regulatory agencies, and the public-at-large.

ASME does not "approve," "rate," or "endorse" any item, construction, proprietary device, or activity.

ASME does not take any position with respect to the validity of any patent rights asserted in connection with any items mentioned in this document, and does not undertake to insure anyone utilizing a standard against liability for infringement of any applicable letters patent, nor assume any such liability. Users of a code or standard are expressly advised that determination of the validity of any such patent rights, and the risk of infringement of such rights, is entirely their own responsibility.

Participation by federal agency representative(s) or person(s) affiliated with industry is not to be interpreted as government or industry endorsement of this code or standard.

ASME accepts responsibility for only those interpretations of this document issued in accordance with the established ASME procedures and policies, which precludes the issuance of interpretations by individuals.

No part of this document may be reproduced in any form,
in an electronic retrieval system or otherwise,
without the prior written permission of the publisher.

The American Society of Mechanical Engineers
Three Park Avenue, New York, NY 10016-5990

Copyright © 2002 by
THE AMERICAN SOCIETY OF MECHANICAL ENGINEERS
All rights reserved
Printed in U.S.A.

Copyright ASME International
Provided by IHS under license with ASME
No reproduction or networking permitted without license from IHS

Not for Resale

CONTENTS

Foreword iv
Committee Roster v
Correspondence With the B107 Committee vi

1 Scope 1

2 Classification 1

3 Normative References 1

4 Definitions 1

5 Requirements 1

6 Test Procedures 3

7 Type, Class, and Style Provisions 4

8 Designations 5

Figures

1 Finished Surfaces 3
2 Type I, Class 1 Diagonal Cutting, Regular Nose, Plain 5
3 Type I, Class 2 Diagonal Cutting, Regular Nose, With Stripping Notches and Skinning Hole 5
4 Type I, Class 3 Diagonal Cutting, Regular Nose, With Cushion Grip Throat 5

Tables

1 Severed Wire Profiles With Cutting Edge Cross Sections 2
2 Steel Wire Cut Test 4
3 Jaw Opening and Closing Test Load 4
4 Type I, Classes 1, 2, and 3 Diagonal Cutting, Regular Nose 6
5 Type II, Regular Nose, Compound Action 7
6 Type III, Diagonal Cutting, Heavy Duty, High Leverage 8
7 Type IV, End Cutting 9

Copyright ASME International
Provided by IHS under license with ASME
No reproduction or networking permitted without license from IHS
Not for Resale

FOREWORD

The American National Standards Committee B107, Socket Wrenches and Drives, under sponsorship of The American Society of Mechanical Engineers, was reorganized as an ASME Standards Committee and its title was changed to Hand Tools and Accessories. In 1996 its scope was expanded to address safety considerations.

The purposes of this Standard are to define general and dimensional data and safety considerations specifically applicable to cutting pliers and to specify test methods to evaluate performance relating to the defined requirements.

This Standard is a revision of ASME B107.11M-1993, Pliers, Diagonal Cutting, and Nippers, End Cutting. Principal changes in this edition of the Standard are the inclusion of safety considerations. Updated finishing requirements and dimensional data are included, as are updated references, particularly regarding information now contained in B107.25M.

The format of this Standard is in accordance with *The ASME Codes & Standards Writing Guide 2000.* Requests for interpretations of the technical requirements of this Standard should be expressed in writing to The American Society of Mechanical Engineers, Secretary, B107 Standards Committee, Three Park Avenue, New York, NY 10016-5990.

The requirements of this Standard become effective at the time of publication. This revision was approved as an American National Standard on May 13, 2002.

Copyright ASME International
Provided by IHS under license with ASME
No reproduction or networking permitted without license from IHS
Not for Resale

ASME STANDARDS COMMITTEE B107
Hand Tools and Accessories

(The following is the roster of the Committee at the time of approval of this Standard.)

OFFICERS

R. R. McCullough, *Chair*
G. E. Olson, *Vice Chair*
J. R. Bird, *Secretary*

COMMITTEE PERSONNEL

J. R. Bird, The American Society of Mechanical Engineers
J. Davidson, Sears Roebuck and Co.
J. S. Foote, Trade Association Management, Inc.
A. Herskovitz, Consultant
H. Kimball, Naval Air Warfare Center
R. R. McCullough, Consultant
D. S. McKittrick, Western Forge
G. E. Olson, Gene Olson Engineering Consultant, Ltd.
W. T. Pagac, Snap-on
D. M. Eggert, *Alternate,* Snap-on
J. M. Ster, General Services Administration
I. I. Harding, *Alternate,* General Services Administration
R. B. Wright, Wright Tool Co.
W. C. Snyder, *Alternate,* Wright Tool Co.

SUBCOMMITTEE 5 — PLIERS AND SNIPS

D. S. McKittrick, *Chair,* Western Forge
J. Davidson, Sears Roebuck and Co.
R. R. McCullough, Consultant
J. M. Ster, General Services Administration

Copyright ASME International
Provided by IHS under license with ASME
No reproduction or networking permitted without license from IHS
Not for Resale

CORRESPONDENCE WITH THE B107 COMMITTEE

General. ASME standards are developed and maintained with the intent to represent the consensus of concerned interests. As such, users of this Standard may interact with the Committee by requesting interpretations, proposing revisions, and attending Committee meetings. Correspondence should be addressed to:

Secretary, B107 Standards Committee
The American Society of Mechanical Engineers
Three Park Avenue
New York, NY 10016-5990

Proposing Revisions. Revisions are made periodically to the Standard to incorporate changes that appear necessary or desirable, as demonstrated by the experience gained from the application of the Standard. Approved revisions will be published periodically.

The Committee welcomes proposals for revisions to this Standard. Such proposals should be as specific as possible, citing the paragraph number(s), the proposed wording, and a detailed description of the reasons for the proposal, including any pertinent documentation.

Interpretations. Upon request, the B107 Committee will render an interpretation of any requirement of the Standard. Interpretations can only be rendered in response to a written request sent to the Secretary of the B107 Standards Committee.

The request for interpretation should be clear and unambiguous. It is further recommended that the inquirer submit his/her request in the following format:

Subject:	Cite the applicable paragraph number(s) and the topic of the inquiry.
Edition:	Cite the applicable edition of the Standard for which the interpretation is being requested.
Question:	Phrase the question as a request for an interpretation of a specific requirement suitable for general understanding and use, not as a request for an approval of a proprietary design or situation. The inquirer may also include any plans or drawings, which are necessary to explain the question; however, they should not contain proprietary names or information.

Requests that are not in this format will be rewritten in this format by the Committee prior to being answered, which may inadvertently change the intent of the original request.

ASME procedures provide for reconsideration of any interpretation when or if additional information that might affect an interpretation is available. Further, persons aggrieved by an interpretation may appeal to the cognizant ASME Committee or Subcommittee. ASME does not "approve," "certify," "rate," or "endorse" any item, construction, proprietary device, or activity.

Attending Committee Meetings. The B107 Standards Committee regularly holds meetings, which are open to the public. Persons wishing to attend any meeting should contact the Secretary of the B107 Standards Committee.

Copyright ASME International
Provided by IHS under license with ASME
No reproduction or networking permitted without license from IHS
Not for Resale

PLIERS: DIAGONAL CUTTING AND END CUTTING

1 SCOPE

This standard covers the dimensional and functional characteristics of pliers suitable for cutting wire. Pliers shall have cutting edges diagonal to or at right angles to their longitudinal axis.

Inclusion of dimensional data in this standard is not intended to imply that all of the pliers described herein are stock production sizes. Consumers should consult with manufacturers concerning lists of stock production sizes.

2 CLASSIFICATION

Type I: Diagonal cutting, regular nose
- *Class 1:* Plain
  - Style A: Standard cutting edges
  - Style B: Semi-flush cutting edges
  - Style C: Flush cutting edges
- *Class 2:* With stripping notches and skinning hole
  - Style A: Standard cutting edges
  - Style B: Semi-flush cutting edges
- *Class 3:* With cushion grip throat
  - Style A: Standard cutting edges
  - Style B: Semi-flush cutting edges

Type II: Regular nose, compound action
- Style A: Standard cutting edges
- Style B: Semi-flush cutting edges
- Style C: Flush cutting edges

Type III: Diagonal cutting, heavy duty, high leverage
- Style A: Standard cutting edges
- Style B: Semi-flush cutting edges
- Style C: Flush cutting edges

Type IV: End cutting
- Style A: Standard cutting edges
- Style B: Semi-flush cutting edges
- Style C: Flush cutting edges

3 NORMATIVE REFERENCES

The following standards form a part of this Standard to the extent specified herein. At the time of publication, the editions indicated were valid. All standards are subject to revision, and parties to agreements based on this Standard are encouraged to investigate the possibility of applying the most recent editions of the standards indicated below.

ASME B46.1-1995, Surface Texture (Surface Roughness, Waviness, and Lay)

ASME B107.25M-1996, Pliers — Performance Test Methods

Publisher: The American Society of Mechanical Engineers (ASME International), Three Park Avenue, New York, NY 10016-5990

4 DEFINITIONS

Definitions of terms used within this Standard may be found in ASME B107.25M.

5 REQUIREMENTS

5.1 Illustrations

The illustrations shown herein are descriptive and not restrictive, and are not intended to preclude the manufacture of pliers that are otherwise in accordance with this Standard. All figures are shown without comfort grips.

5.2 Materials

The materials used in the manufacture of pliers shall be such as to produce pliers conforming to the requirements specified herein.

5.3 Design

Pliers shall be similar to the figure to which reference is made; shall be proportioned in all parts so as to be strong, durable, and easy to operate; and shall conform to the requirements specified herein. Test specimens shall withstand applicable test procedures without cracking or breaking.

5.4 Severed Wire Profiles

Cutting edges shall be so designed as to produce one of the severed wire profiles illustrated in Table 1 using wire specified in para. 6.2.1.

5.5 Handles

5.5.1 Characteristics. Handles shall have a hardness from 35 HRC to 50 HRC or equivalent. Handles shall be so shaped as to provide a comfortable grip and shall be free from rough edges and sharp corners. Ends of handles shall not touch when the jaws are in a closed position. Outer hand gripping surfaces shall be smooth,

Copyright ASME International
Provided by IHS under license with ASME
No reproduction or networking permitted without license from IHS
Not for Resale

Table 1 Severed Wire Profiles With Cutting Edge Cross Sections

Pliers Style	Severed Wire Profile	Typical Cutting Edge Cross Section
Style A — Standard	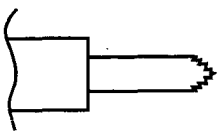	
Style B — Semi-flush	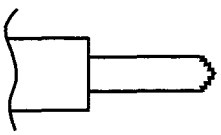	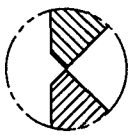
Style C — Flush	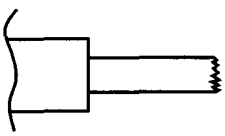	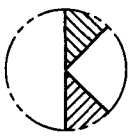

knurled, impressed, or furnished with comfort grips.

5.5.2 Permanent Set. Permanent set of the handles for all types, except Type II, shall not exceed 0.04 in. (1.0 mm) when subjected to the handle load test specified in para. 6.4. Handles contacting each other during load testing shall constitute failure.

5.5.3 Comfort Grips. When comfort grips are furnished on handles, they shall be made of rubber, plastic, or other suitable material capable of withstanding normal use without deteriorating or rubbing off and shall pass the solvent resistance test specified in para. 6.5. Comfort grips shall remain permanently attached under normal use.

WARNING: COMFORT GRIPS ON HANDLES ARE NOT INTENDED TO GIVE ANY DEGREE OF PROTECTION AGAINST ELECTRIC SHOCK AND SHALL NOT BE USED ON OR NEAR LIVE ELECTRIC CIRCUITS.

5.6 Joint

5.6.1 Construction. When pliers are opened or closed, there shall be no excessive sideways movement, play, or other indication of looseness that will affect their function.

5.6.2 Fastener Hardness. The fastener hardness shall be from 25 HRC to 50 HRC except when the fastener receives a case hardening treatment in addition to the through hardening, a maximum hardness equivalent to 60 HRC shall be permitted.

5.7 Jaws

5.7.1 Jaw Opening. Jaw opening shall be measured at tip of the jaws. Jaws shall open in a smooth and uniform manner to the respective minimum jaw opening as specified in applicable tables for individual type and class of pliers using the procedure specified in para. 6.6. Beyond minimum opening, jaws may open with increasing loads until the positive stop of the tool is engaged.

5.7.2 Cutting Edge Hardness. Cutting edges shall have a hardness from 55 HRC to 65 HRC or equivalent. The balance of the jaw area shall have a minimum hardness of 35 HRC.

5.7.3 Cushion Grip Throat. Type I Class 3 pliers shall grip and retain cut wire end. The cushion grip throat shall be made of rubber, plastic, or other suitable material capable of withstanding normal use without deteriorating or rubbing off and shall pass the solvent resistance test specified in para. 6.5. Cushion grip throat shall remain permanently attached under normal use.

5.8 Springs

When a spring (or springs) is furnished, it shall be captive, durable, and capable of opening the jaws under normal use. The spring shall open the jaws to minimum jaw opening as specified in the applicable tables.

5.9 Finish

5.9.1 Appearance. Pliers shall have finished surfaces as indicated in Fig. 1. These surfaces shall have a maximum surface roughness of 63 μin. (1.6 μm), arithmetic average. Measurement of the finish shall be made with an instrument using a cutoff length of 0.03 in. (0.8 mm) (refer to ASME B46.1). All other surfaces shall be free of pits, burrs, cracks, and other conditions that may

Copyright ASME International
Provided by IHS under license with ASME
No reproduction or networking permitted without license from IHS
Not for Resale

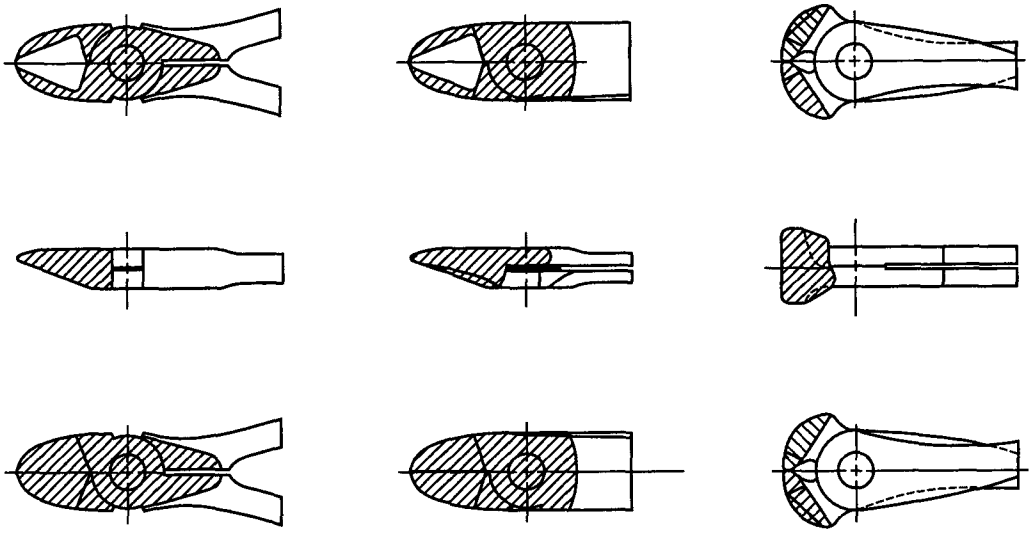

GENERAL NOTE: Cross-hatched areas are finished.

Fig. 1 Finished Surfaces

adversely affect the performance or appearance of the pliers.

5.9.2 Coating. All metal surfaces shall be coated to inhibit rust. Coatings shall be adherent, smooth, and continuous, and free from pits, blisters, nodules, and any other conditions that would interfere with their protective value and serviceability.

5.10 Marking

Pliers shall be marked in a plain and permanent manner with the manufacturer's name or with a trademark of such known character that the source of manufacture and country of origin shall be readily determined. Marking shall be as permanent as the normal life expectancy of the pliers to which it is applied (providing the marked surface has not then been subjected to a fretting or abrading action) and be capable of withstanding the cleaning normally experienced during its intended use.

6 TEST PROCEDURES

6.1 Safety

WARNING: MANY TESTS REQUIRED HEREIN ARE INHERENTLY HAZARDOUS AND ADEQUATE SAFEGUARDS FOR PERSONNEL AND PROPERTY SHALL BE EMPLOYED IN CONDUCTING SUCH TESTS.

6.2 Cut Tests

Cut tests shall be performed per para. 5.2 of ASME B107.25M. Wire diameter and handle load are shown in Table 2 herein.

6.2.1 Steel Wire. Steel wire for cut tests shall be uncoated single-stranded having minimum tensile strength of 180,000 psi (1 240 MPa) for Style A; 90,000 psi (620 MPa) for Style B; and 70,000 psi (400 MPa) for Style C. Wire being cut may be loosely supported at the jaws by the operator in the manner ordinarily employed.

6.2.2 Steel Wire Cut Test for Types I, II, and III. Three cuts shall be made at the joint end of the cutting edges, and the load required to completely sever the wire shall not exceed the maximum handle load. Load shall be applied at the point of maximum handle curvature (normal gripping position).

6.2.3 Steel Wire Cut Test for Type IV. A total of nine cuts shall be made. Three cuts shall made at the approximate midpoint of the cutting edges, and the test load required to completely sever the wire shall not exceed the maximum handle load. Three cuts shall be made at each end of the cutting edges with the wire located not more than 0.13 in. (3.3 mm) from the respective ends. Load shall be applied at the point of maximum handle curvature (normal gripping position). Load determinations shall not be required for cuts made at the ends of the cutting edges.

6.2.4 Paper Cut Test. Following wire cut test, the paper cut test shall be performed per ASME B107.25M, para. 5.2.2. The cutting edges shall completely and cleanly cut bond paper. Load shall be applied at the point of maximum handle curvature (normal gripping position).

6.3 Hardness Test

Hardnesses specified herein shall be tested in accordance with ASME B107.25M, para. 5.3. Handle hardness determination shall be taken approximately midway between the fastener and the end of each handle.

Copyright ASME International
Provided by IHS under license with ASME
No reproduction or networking permitted without license from IHS
Not for Resale

Table 2 Steel Wire Cut Test

Nominal Size		Wire Diameter Style A				Wire Diameter Styles B and C				Maximum Handle Load Style A		Maximum Handle Load Styles B and C	
		in.		mm		in.		mm					
in.	mm	Min.	Max.	Min.	Max.	Min.	Max.	Min.	Max.	in.-lb	N·m	in.-lb	N·m
4	100	0.032	0.036	0.81	0.91	0.032	0.036	0.81	0.91	100	11.3	50	5.6
4½	115	0.045	0.049	1.14	1.25	0.032	0.036	0.81	0.91	265	29.9	133	15.0
5	130	0.060	0.064	1.52	1.63	0.032	0.036	0.81	0.91	500	56.5	250	28.2
5½	140	0.060	0.064	1.52	1.63	0.032	0.036	0.81	0.91	600	67.8	300	33.9
6	150	0.078	0.082	1.98	2.08	0.032	0.036	0.81	0.91	700	79.1	350	39.5
7	180	0.078	0.082	1.98	2.08	0.032	0.036	0.81	0.91	750	84.7	375	42.3
7½	190	0.078	0.082	1.98	2.08	0.032	0.036	0.81	0.91	775	87.6	388	43.8
8	200	0.078	0.082	1.98	2.08	0.032	0.036	0.81	0.91	775	87.6	388	43.8

6.4 Handle Load Test

Permanent set shall be tested in accordance with para. 5.1 of ASME B107.25M. Loads are specified in Table 2 herein. Load shall be applied at the point of maximum handle curvature (normal gripping position). Grips, when provided, shall be removed prior to testing.

6.5 Solvent Resistance Test

Comfort grips and cushion grip throat shall be tested in accordance with para. 5.5.1 of ASME B107.25M.

6.6 Jaw Opening and Closing Test

Pliers shall be tested in accordance with para. 5.4.3 of ASME B107.25M. The load required to open jaws to, or close jaws from, the respective minimum jaw opening shall not be greater than that shown in Table 3. Jaw opening is specified in Tables 4, 5, 6, or 7.

7 TYPE, CLASS, AND STYLE PROVISIONS

7.1 Type I, Diagonal Cutting, Regular Nose

Pliers shall be suitable for cutting wire close to flat surfaces. One side of the jaws shall be recessed to provide a suitable cutting edge clearance.

7.1.1 Type I, Class 1, Plain, Styles A, B, and C. Pliers shall be similar to Fig. 2 and shall conform to dimensions shown in Table 4 for the size specified.

Table 3 Jaw Opening and Closing Test Load

Nominal Size		Maximum Handle Load	
in.	mm	lb	N
4 and 4½	100 and 115	0.75	3.3
5 and 5½	125 and 140	1.50	6.7
6 and over	150 and over	2.25	10.0

7.1.2 Type I, Class 2, With Stripping Notches and Skinning Hole, Styles A and B. Pliers shall have a W-shaped notch on the outside of each jaw and a 0.052 in. ±0.005 in. (1.32 mm ±0.13 mm) diameter hole in the cutting edges for stripping insulation from wire. Pliers shall be similar to Fig. 3 and shall conform to dimensions shown in Table 4 for the size specified.

7.1.3 Type I, Class 3, With Cushion Grip Throat, Styles A and B. Pliers shall be similar to Type I, Class 1, except the jaws shall have a cushion grip throat. Pliers shall be similar to Fig. 4, conform to dimensions shown in Table 4 for the size specified, and meet the requirements of para. 5.7.3.

7.2 Type II, Regular Nose, Compound Action

Pliers shall be of a compound leverage construction with spring-operated, self-opening handles and shall have a positive stop. Pliers shall be similar to the illustration in Table 5 and conform to the dimensions shown in Table 5 for the size specified.

7.3 Type III, Diagonal Cutting, Heavy Duty, High Leverage, Styles A, B, and C

Pliers shall be suitable for cutting wire close to flat surfaces. One side of the jaws shall be recessed to provide a suitable cutting edge clearance. Pliers shall be similar to the illustration in Table 6 and shall conform to dimensions shown in Table 6 for the size specified.

7.4 Type IV, End Cutting, Styles A, B, and C

Pliers shall be suitable for cutting wire close to flat or concave surfaces. The cutting edges shall be integral with the jaw and at right angles to the plane of the handles. Pliers shall be similar to the illustration in Table 7 and shall conform to dimensions shown in Table 7 for the size specified.

Copyright ASME International
Provided by IHS under license with ASME
No reproduction or networking permitted without license from IHS
Not for Resale

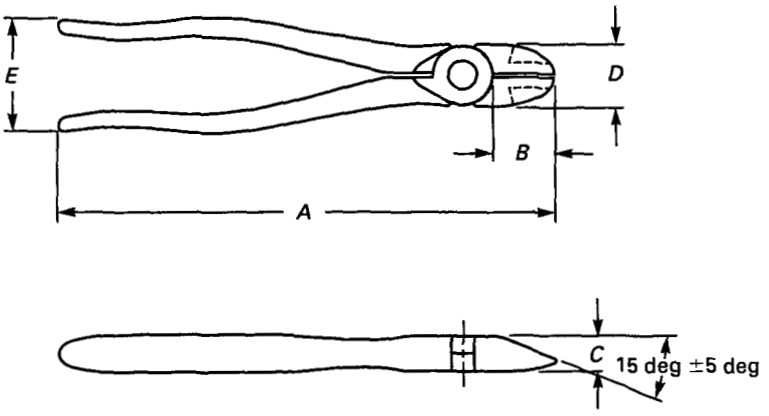

Fig. 2 Type I, Class 1 Diagonal Cutting, Regular Nose, Plain

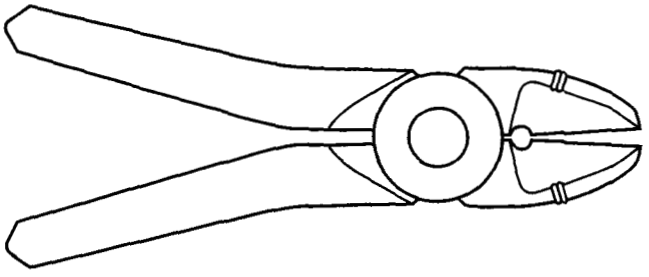

Fig. 3 Type I, Class 2 Diagonal Cutting, Regular Nose, With Stripping Notches and Skinning Hole

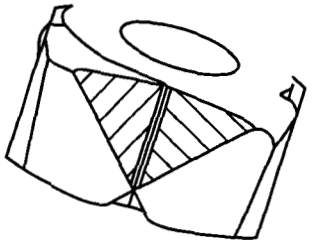

Fig. 4 Type I, Class 3 Diagonal Cutting, Regular Nose, With Cushion Grip Throat

8 DESIGNATIONS

Purchasers should select the preferred options permitted herein and include the following information in procurement documents.

(a) Title, number, and date of this standard.

(b) Type, class, and style of pliers required.

(c) Nominal size of pliers required.

(d) Other

(1) Coating: If a particular coating (e.g., oxide or phosphate) is required, it should be noted on the procurement document; otherwise manufacturer's standard coating will be furnished.

(2) Handles: If comfort grip handles are required, it should be noted on the procurement document.[1]

(3) Springs: If springs are required, it should be noted on the procurement document.[1]

[1] Some manufacturers may offer this item as a standard feature on certain types and styles of pliers.

Copyright ASME International
Provided by IHS under license with ASME
No reproduction or networking permitted without license from IHS
Not for Resale

Copyright ASME International
Provided by IHS under license with ASME
No reproduction or networking permitted without license from IHS

Table 4 Type I, Classes 1, 2, and 3 Diagonal Cutting, Regular Nose

Nominal Size		Overall Length, *A* [Note (1)]				Jaw Length, *B*				Joint Thickness, *C*				Joint Width, *D*				Handle Span, *E* [Note (1)]				Jaw Opening, Min.	
		in.		mm		in.		mm		in.		mm		in.		mm		in.		mm			
in.	mm	Min.	Max.	Min.	Max.	Min.	Max.	Min.	Max.	Min.	Max.	Min.	Max.	Min.	Max.	Min.	Max.	Min.	Max.	Min.	Max.	in.	mm
4	100	3.87	4.25	98.3	108.0	0.41	0.53	10.4	13.5	0.22	0.27	5.6	6.9	0.37	0.44	9.4	11.2	1.75	2.00	44.4	50.8	0.19	4.8
4½	115	4.25	4.69	108.0	119.1	0.50	0.75	12.7	19.1	0.25	0.38	6.3	9.7	0.37	0.63	9.4	16.0	1.87	2.13	47.5	54.1	0.25	6.4
5	125	4.87	5.25	123.7	133.4	0.69	0.94	17.5	23.9	0.31	0.44	7.9	11.2	0.50	0.75	12.7	19.1	1.87	2.13	47.5	54.1	0.31	7.9
6	150	5.75	6.31	146.1	160.3	0.69	0.94	17.5	23.9	0.37	0.50	9.4	12.7	0.56	0.81	14.2	20.6	1.87	2.13	47.5	54.1	0.44	11.2
7½	190	7.19	7.81	182.6	198.4	0.75	1.13	19.1	28.7	0.44	0.56	11.2	14.2	0.75	1.00	19.1	25.4	1.87	2.13	47.5	54.1	0.50	12.7

GENERAL NOTE: For reference, see Figs. 2, 3, and 4.

NOTE:

(1) For plain handles without comfort grips.

Not for Resale

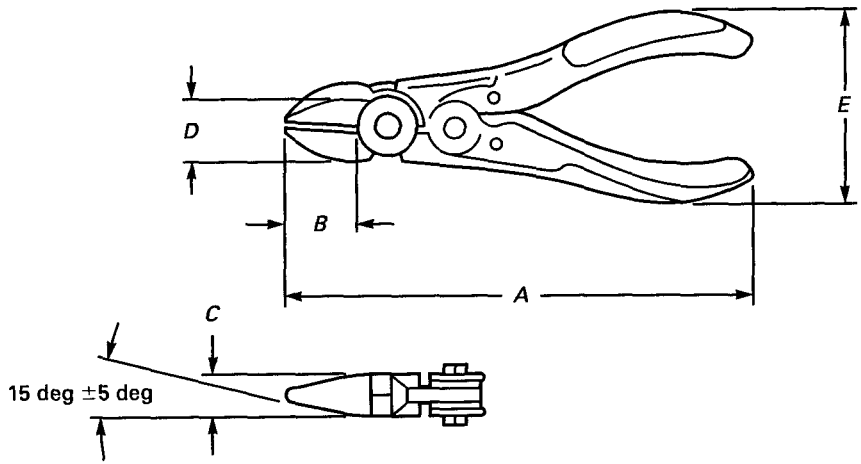

Table 5 Type II, Regular Nose, Compound Action

Nominal Size		Overall Length, *A* [Note (1)]				Jaw Length, *B*				Joint Thickness, *C*				Joint Width, *D*				Handle Span, *E* [Note (1)]				Jaw Opening, Min.	
		in.		mm		in.		mm		in.		mm		in.		mm		in.		mm			
in.	mm	Min.	Max.	Min.	Max.	Min.	Max.	Min.	Max.	Min.	Max.	Min.	Max.	Min.	Max.	Min.	Max.	Min.	Max.	Min.	Max.	in.	mm
$5\frac{1}{2}$	140	5.25	5.75	133.4	146.1	0.75	0.87	19.1	22.1	0.34	0.41	8.6	10.4	0.63	0.87	16.0	22.1	1.69	2.25	42.9	57.2	0.19	4.8

NOTE:
(1) For plain handles without comfort grips.

Copyright ASME International
Provided by IHS under license with ASME
No reproduction or networking permitted without license from IHS
Not for Resale

Copyright ASME International
Provided by IHS under license with ASME
No reproduction or networking permitted without license from IHS

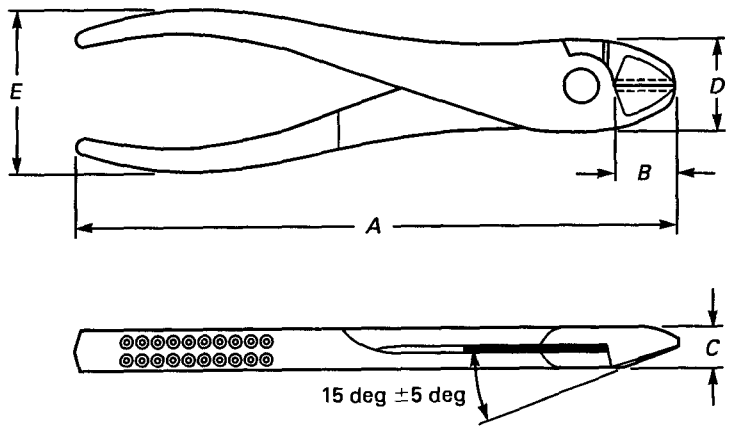

Table 6 Type III, Diagonal Cutting, Heavy Duty, High Leverage

Nominal Size		Overall Length, *A* [Note (1)]				Jaw Length, *B*				Joint Thickness, *C*				Joint Width, *D*				Handle Span, *E* [Note (1)]				Jaw Opening, Min.	
		in.		mm		in.		mm		in.		mm		in.		mm		in.		mm			
in.	mm	Min.	Max.	Min.	Max.	Min.	Max.	Min.	Max.	Min.	Max.	Min.	Max.	Min.	Max.	Min.	Max.	Min.	Max.	Min.	Max.	in.	mm
6	150	5.50	6.50	139.7	165.1	0.53	0.59	13.5	15.0	0.37	0.50	9.4	12.7	0.56	0.81	14.2	20.6	1.87	2.13	47.5	54.1	0.44	11.2
7	180	6.62	7.63	168.1	194.3	0.72	0.91	18.3	23.1	0.44	0.56	11.2	14.2	1.06	1.31	26.9	33.3	1.75	2.19	44.4	55.6	0.50	12.7
8	200	7.50	8.50	190.5	215.9	0.69	0.94	17.5	23.9	0.31	0.56	7.9	14.2	1.06	1.31	26.9	33.3	1.75	2.19	44.4	55.6	0.50	12.7

NOTE:
(1) For plain handles without comfort grips.

Not for Resale

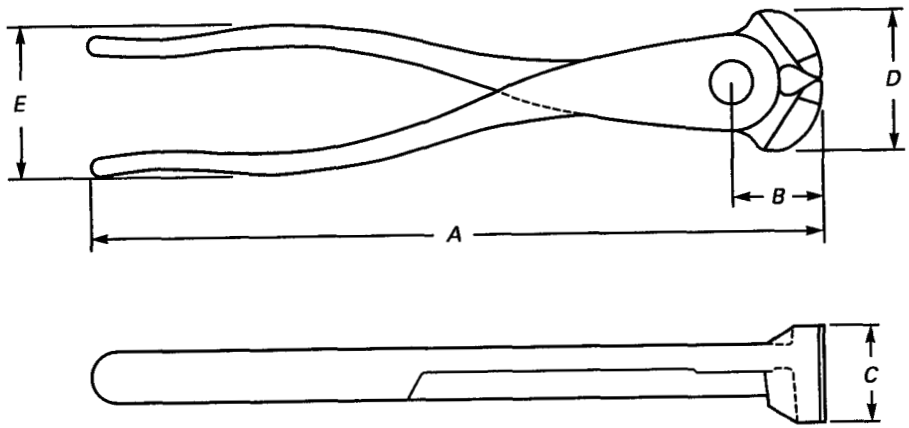

Table 7 Type IV, End Cutting

Nominal Size		Overall Length, *A* [Note (1)]				Jaw Length, *B*				Joint Thickness, *C*				Joint Width, *D*				Handle Span, *E* [Note (1)]				Jaw Opening, Min.	
		in.		mm		in.		mm		in.		mm		in.		mm		in.		mm			
in.	mm	Min.	Max.	Min.	Max.	Min.	Max.	Min.	Max.	Min.	Max.	Min.	Max.	Min.	Max.	Min.	Max.	Min.	Max.	Min.	Max.	in.	mm
$4\frac{1}{2}$	115	3.87	5.00	98.3	127.0	0.34	0.66	8.6	16.8	0.50	1.00	12.7	25.4	0.50	0.75	12.7	19.1	1.31	1.94	33.3	49.3	0.12	3.0
6	150	5.75	6.75	146.0	171.5	0.53	0.84	13.5	23.9	0.81	1.31	23.1	33.3	1.37	1.63	34.8	41.4	1.44	2.06	36.6	52.3	0.19	4.8
7	180	6.75	7.75	171.4	196.9	0.59	0.91	15.0	23.1	0.94	1.44	23.9	36.6	1.56	1.81	39.6	46.0	1.56	2.19	39.6	55.6	0.25	6.3
8	200	7.75	8.75	196.8	222.2	0.59	0.91	15.0	23.1	0.94	1.44	23.9	36.6	1.62	1.88	41.1	46.0	1.56	2.19	39.6	55.6	0.25	6.3

NOTE:
(1) For plain handles without comfort grips.

Copyright ASME International
Provided by IHS under license with ASME
No reproduction or networking permitted without license from IHS
Not for Resale

AMERICAN NATIONAL STANDARDS FOR HAND TOOLS

Socket Wrenches, Hand (Inch Series) B107.1-2002
Socket Wrenches, Extensions, Adaptors, and Universal Joints,
Power Drive (Impact) (Inch Series) B107.2-2002
Socket Wrenches, Power Drive (Non-Impact) (Inch Series) ..... B107.3-1978(R1991)
Driving and Spindle Ends for Portable Hand, Impact, Air, and
Electric Tools (Percussion Tools Excluded) B107.4M-1995
Socket Wrenches, Hand (Metric Series) B107.5M-2002
Adjustable Wrenches B107.8M-1996
Handles and Attachments for Hand Socket Wrenches — Inch and Metric Series B107.10M-1996
Pliers: Diagonal Cutting and End Cutting B107.11-2002
Nut Drivers (Spin Type, Screwdriver Grip) (Inch Series) B107.12-1997
Pliers — Long Nose, Long Reach B107.13M-1996
Hand Torque Tools B107.14M-1994
Flat Tip and Phillips Screwdrivers B107.15-1993
Shears (Metal Cutting, Hand) B107.16M-1998
Gages, Wrench Openings, Reference B107.17M-1997
Pliers (Wire Twister) B107.18M-1996
Pliers, Retaining Ring ..... B107.19-1993(R1998)
Pliers (Lineman's, Iron Worker's, Gas, Glass, Fence, and Battery) B107.20M-1998
Wrench, Crowfoot Attachments B107.21-1998
Electronic Cutters B107.22M-1998
Pliers, Multiple Position, Adjustable B107.23M-1997
Pliers — Performance Test Methods B107.25M-1996
Pliers, Multiple Position (Electrical Connector) B107.27-1996
Electronic Torque Instruments B107.28M-1997
Electronic Tester, Hand Torque Tools B107.29M-1998
Screwdrivers, Cross Tip Gaging B107.31M-1997
Socket Wrenches for Spark Plugs B107.34M-1997
Nut Drivers (Spin Type, Screwdriver Grip) (Metric Series) B107.35M-1997
Electronic Pliers B107.38M-1998
Nail Hammers — Safety Requirements B107.41M-1997
Hatchets: Safety Requirements B107.42M-1997
Wood-Splitting Wedges: Safety Requirements B107.43M-1997
Glaziers' Chisels and Wood Chisels B107.44-2002
Ripping Chisels and Flooring/Electricians' Chisels B107.45-2002
Stud, Screw, and Pipe Extractors: Safety Requirements B107.46M-1998
Metal Chisels: Safety Requirements B107.47M-1998
Metal Punches and Drift Pins: Safety Requirements B107.48M-1998
Nail Sets: Safety Requirements B107.49M-1998
Brick Chisels and Brick Sets: Safety Requirements B107.50M-1998
Star Drills: Safety Requirements B107.51-2001
Nail-Puller Bars: Safety Requirements B107.52M-1998
Ball Peen Hammers: Safety Requirements B107.53M-1998
Heavy Striking Tools: Safety Requirements B107.54-2001
Axes: Safety Requirements B107.55M-2002
Body Repair Hammers and Dolly Blocks:Safety Requirements B107.56-1999
Bricklayers' Hammers and Prospecting Picks: Safety Requirements B107.57-2001
Riveting, Scaling, and Tinner's Setting Hammers: Safety Requirements B107.58M-1998
Slugging and Striking Wrenches B107.59-2002
Wrenches B107.100-2002

The ASME Publications Catalog shows a complete list of all the Standards published by the Society. For a complimentary catalog, or the latest information about our publications, call 1-800-THE-ASME (1-800-843-2763).

Copyright ASME International
Provided by IHS under license with ASME
No reproduction or networking permitted without license from IHS
Not for Resale

ISBN 0-7918-2784-4

N10402

Copyright ASME International
Provided by IHS under license with ASME
No reproduction or networking permitted without license from IHS

Not for Resale