ASME B107.100-2002

# WRENCHES

## Incorporating ASME B107.6, ASME B107.9, ASME B107.39, and ASME B107.40

AN AMERICAN NATIONAL STANDARD

The American Society of Mechanical Engineers

Copyright ASME International
Provided by IHS under license with ASME
No reproduction or networking permitted without license from IHS

Not for Resale

The American Society of Mechanical Engineers

AN AMERICAN NATIONAL STANDARD

# WRENCHES

## INCORPORATING ASME B107.6, ASME B107.9, ASME B107.39, and ASME B107.40

## ASME B107.100-2002

Copyright ASME International
Provided by IHS under license with ASME
No reproduction or networking permitted without license from IHS
Not for Resale

Date of Issuance: November 22, 2002

The 2002 edition of this Standard is being issued with an automatic addenda subscription service. The use of addenda allows revisions made in response to public review comments or committee actions to be published as necessary. This Standard will be revised when the Society approves the issuance of a new edition.

ASME issues written replies to inquiries concerning interpretations of technical aspects of this Standard. Interpretations are published on the ASME Web site under the Committee Pages at http://www.asme.org/codes as they are issued.

ASME is the registered trademark of The American Society of Mechanical Engineers.

This code or standard was developed under procedures accredited as meeting the criteria for American National Standards. The Standards Committee that approved the code or standard was balanced to assure that individuals from competent and concerned interests have had an opportunity to participate. The proposed code or standard was made available for public review and comment that provides an opportunity for additional public input from industry, academia, regulatory agencies, and the public-at-large.

ASME does not "approve," "rate," or "endorse" any item, construction, proprietary device, or activity.

ASME does not take any position with respect to the validity of any patent rights asserted in connection with any items mentioned in this document, and does not undertake to insure anyone utilizing a standard against liability for infringement of any applicable letters patent, nor assumes any such liability. Users of a code or standard are expressly advised that determination of the validity of any such patent rights, and the risk of infringement of such rights, is entirely their own responsibility.

Participation by federal agency representative(s) or person(s) affiliated with industry is not to be interpreted as government or industry endorsement of this code or standard.

ASME accepts responsibility for only those interpretations of this document issued in accordance with the established ASME procedures and policies, which precludes the issuance of interpretations by individuals.

No part of this document may be reproduced in any form,
in an electronic retrieval system or otherwise,
without the prior written permission of the publisher.

The American Society of Mechanical Engineers
Three Park Avenue, New York, NY 10016-5990

Copyright © 2002 by
THE AMERICAN SOCIETY OF MECHANICAL ENGINEERS
All Rights Reserved
Printed in U.S.A.

Copyright ASME International
Provided by IHS under license with ASME
No reproduction or networking permitted without license from IHS

Not for Resale

# CONTENTS


Foreword ..... iv
Committee Roster ..... v
Correspondence with the B107 Committee ..... vi
Flat Wrench Designations ..... vii

**ASME B107.6 Combination Wrenches (Inch and Metric Series)** ..... 1

**ASME B107.9 Box Wrenches, Double Head (Inch and Metric Series)** ..... 9

**ASME B107.39 Open End Wrenches (Inch and Metric Series)** ..... 20

**ASME B107.40 Flare Nut Wrenches (Inch and Metric Series)** ..... 34




Copyright ASME International
Provided by IHS under license with ASME
No reproduction or networking permitted without license from IHS
Not for Resale

# FOREWORD

The American National Standards Committee B107, Socket Wrenches and Drives, under sponsorship of The American Society of Mechanical Engineers, was reorganized as an ASME Standards Committee and its title was changed to Hand Tools and Accessories.

The purpose of this Standard is to define general and dimensional data specifically applicable to combination, box, open end, and flare nut wrenches and to specify test methods to evaluate performance relating to the defined requirements.

This Standard includes revisions of B107.6-1994 Combination Wrenches (Inch Series) and B107.9M-1994 Combination Wrenches (Metric Series). Further, information from B107.6-1994 and B107.9M-1994 has been moved to new Standards B107.39 and B107.40, and some configurations discontinued (refer to the table on page vii). A principal change in this edition of the Standard is the use of Type designations in place of Class and Style designations, in accordance with other B107 Standards. Updated references, finish requirements, and dimensional data are included.

The format of this Standard is in accordance with *The ASME Codes & Standards Writing Guide 2000*. Requests for interpretations of the technical requirements of this Standard should be expressed in writing to the Secretary, B107 Committee, at the address below.

Suggestions for the improvement of this Standard are welcome. They should be addressed to the Secretary, ASME B107 Committee, Three Park Avenue, New York, NY 10016-5990.

The requirements of this Standard become effective at the time of publication.

This revision was approved as an American National Standard on May 13, 2002.



Copyright ASME International
Provided by IHS under license with ASME
No reproduction or networking permitted without license from IHS
Not for Resale

# ASME STANDARDS COMMITTEE B107
# Hand Tools and Accessories

(The following is the roster of the Committee at the time of approval of this Standard.)

## OFFICERS

**R. R. McCullough,** *Chair*
**G. E. Olson,** *Vice Chair*
**J. R. Bird,** *Secretary*

## COMMITTEE PERSONNEL

**J. R. Bird,** The American Society of Mechanical Engineers
**J. D. Davidson,** Sears Roebuck and Co.
**J. S. Foote,** Trade Association Management, Inc.
**A. Herskovitz,** Consultant
**H. Kimball,** Naval Air Warfare Center
**R. R. McCullough,** Consultant
**D. S. McKittrick,** Western Forge
**G. E. Olson,** Gene Olson, Engineering Consultant Ltd.
**W. T. Pagac,** Snap-on
**D. M. Eggert,** *Alternate,* Snap-on
**J. M. Ster,** General Services Administration
**I. L. Harding,** *Alternate,* General Services Administration
**R. B. Wright,** Wright Tool Co.
**W. C. Snyder,** *Alternate,* Wright Tool Co.

## SUBCOMMITTEE 2 — FLAT WRENCHES

**W. T Pagac,** *Chair,* Snap-on
**J. D. Davidson,** Sears Roebuck & Co.
**R. F. Paeth,** SK Handtools Corp.
**W. C. Snyder,** Wright Tool Co.



Copyright ASME International
Provided by IHS under license with ASME
No reproduction or networking permitted without license from IHS
Not for Resale

# CORRESPONDENCE WITH THE B107 COMMITTEE

*General.* ASME Standards are developed and maintained with the intent to represent the consensus of concerned interests. As such, users of this Standard may interact with the Committee by requesting interpretations, proposing revisions, and attending Committee meetings. Correspondence should be addressed to:

Secretary, B107 Standards Committee
The American Society of Mechanical Engineers
Three Park Avenue
New York, NY 10016-5990

*Proposing Revisions.* Revisions are made periodically to the Standard to incorporate changes that appear necessary or desirable, as demonstrated by the experience gained from the application of the Standard. Approved revisions will be published periodically.

The Committee welcomes proposals for revisions to this Standard. Such proposals should be as specific as possible, citing the paragraph number(s), the proposed wording, and a detailed description of the reasons for the proposal, including any pertinent documentation.

*Interpretations.* Upon request, the B107 Committee will render an interpretation of any requirement of the Standard. Interpretations can only be rendered in response to a written request sent to the Secretary of the B107 Standards Committee.

The request for interpretation should be clear and unambiguous. It is further recommended that the inquirer submit his/her request in the following format:

| | |
|---|---|
| Subject: | Cite the applicable paragraph number(s) and the topic of the inquiry. |
| Edition: | Cite the applicable edition of the Standard for which the interpretation is being requested. |
| Question: | Phrase the question as a request for an interpretation of a specific requirement suitable for general understanding and use, not as a request for an approval of a proprietary design or situation. The inquirer may also include any plans or drawings, which are necessary to explain the question; however, they should not contain proprietary names or information. |

Requests that are not in this format may be rewritten in the appropriate format by the Committee prior to being answered, which may inadvertently change the intent of the original request.

ASME procedures provide for reconsideration of any interpretation when or if additional information that might affect an interpretation is available. Further, persons aggrieved by an interpretation may appeal to the cognizant ASME Committee or Subcommittee. ASME does not "approve," "certify," "rate," or "endorse" any item, construction, proprietary device, or activity.

*Attending Committee Meetings.* The B107 Standards Committee regularly holds meetings, which are open to the public. Persons wishing to attend any meeting should contact the Secretary of the B107 Standards Committee.



Copyright ASME International
Provided by IHS under license with ASME
No reproduction or networking permitted without license from IHS
Not for Resale

## Flat Wrench Designations

| Description | Length | Series | Designation before 1997 Std | Type | Class | Style | Designation after 1997 Std | Type | Class |
|---|---|---|---|---|---|---|---|---|---|
| Box Wrench, Double Head, 15 deg offset each end | Reg | Inch | B107.6 | I | 1 | 1 | B107.9 | I | 1 |
| Box Wrench, Double Head, modified offset each end | Reg | Inch | B107.6 | I | 2 | 1 | B107.9 | II | 1 |
| Box Wrench, Double Head, Deep offset each end | Reg | Inch | B107.6 | I | 2 | 1 | B107.9 | III | 1 |
| Box Wrench, Double Head, 15 deg offset each end | Short | Inch | B107.6 | I | 1 | 2 | B107.9 | I | 2 |
| Box Wrench, Double Head, modified offset each end | Short | Inch | B107.6 | I | 2 | 2 | B107.9 | II | 2 |
| Box Wrench, Double Head. Deep offset each end | Short | Inch | B107.6 | I | 2 | 2 | B107.9 | III | 2 |
| Engineer's wrench, double head, open end, 15 deg | Reg | Inch | B107.6 | II | | | B107.39 | I | 1 |
| Engineer's wrench, double head, open end, 15 deg | Short | Inch | B107.6 | II | | | B107.39 | I | 2 |
| Combination Wrench, open end, 15 deg box opening | Reg | Inch | B107.6 | III | 1 | | B107.6 | I | |
| Combination Wrench, open end, 15 deg box opening | Short | Inch | B107.6 | III | 2 | | B107.6 | II | |
| Combination Wrench, open end, 15 deg box opening | Long | Inch | B107.6 | III | 3 | | B107.6 | III | |
| Flare Nut wrench, double head, open end | | Inch | B107.6 | IV | | | B107.40 | I | |
| Flare Nut Comb. wrench, open end and 15 deg Offset box opening | | Inch | B107.6 | V | | | B107.40 | II | |
| Wrench, double head, open end, 15 / 60 deg Open end | | Inch | B107.6 | VI | 1 | | B107.39 | II | 2 |
| Angle Wrench, double head, open end, 30 / 60 deg Open end | | Inch | B107.6 | VI | 2 | | B107.39 | II | 1 |
| Angle Wrench, double head, open end, 15 / 75 deg Open end | | Inch | B107.6 | VI | 3 | | Discontinued | | |
| Tappet Wrench, double head, open end | | Inch | B107.6 | VII | | | B107.39 | III | |
| Tappet Wrench, single head, open end | | Inch | B107.6 | VIII | | | Discontinued | | |
| Box Wrench, Double Head, 15 deg offset each end | Reg | Metric | B107.9M | I | 1 | 1 | B107.9 | I | |
| Box Wrench Double Head, modified offset each end | Reg | Metric | B107.9M | I | 2 | 1 | B107.9 | II | 1 |
| Box Wrench, Double Head, Deep offset each end | Reg | Metric | B107.9M | I | 2 | 1 | B107.9 | III | 1 |
| Box Wrench, Double Head, 15 deg offset each end | Short | Metric | | | | | B107.9 | I | 2 |
| Box Wrench ruble Head, modified offset each end | Short | Metric | B107.9M | I | 2 | 2 | B107.9 | II | 2 |
| Box Wrench, Double Head, Deep offset each end | Short | Metric | B107.9M | I | | | | | |
| Engineer's wrench, double head, open end, 15 deg | Reg | Metric | B107.9M | II | 1 | | | | |
| Engineer's wrench, double head, open end, 15 deg | Short | Metric | B107.9M | II | | | B107.39 | I | 2 |
| Combination Wrench, open end, 15 deg box opening | Reg | Metric | B107.9M | III | 1 | | B107.6 | I | |
| Combination Wrench, open end, 15 deg box opening | Short | Metric | B107.9M | III | | | | | |
| Combination Wrench, open end, 15 deg box opening | Long | Metric | B107.9M | III | 3 | | B107.6 | III | |
| Flare Nut wrench, double head, open end | | Metric | B107.9M | IV | | | B107.40 | I | |
| Flare Nut Comb. wrench, open end and 15 deg Offset box opening | | Metric | B107.9M | V | | | B107.40 | II | |
| Angle Wrench, double head, open end, 15 / 60 deg Open end | | Metric | B107.9M | VI | 1 | | B107.39 | II | 2 |
| Angle Wrench, double head, open end, 30 / 60 deg Open end | | Metric | B107.9M | VI | 2 | | B107.39 | II | I |
| Angle Wrench, double head, open end, 15 / 75 deg Open end | | Metric | B107.9M | VI | 3 | | Discontinued | | |
| Tappet Wrench, double head, open end | | Metric | B107.9M | VII | | | B107.39 | III | |
| Tappet Wrench, single head, open end | | Metric | B107.9M | VIII | | | Discontinued | | |



Copyright ASME International
Provided by IHS under license with ASME
No reproduction or networking permitted without license from IHS
Not for Resale

# ASME B107.6


**1 Scope** ..... 2

**2 Classification** ..... 2

**3 Normative References** ..... 2

**4 Requirements** ..... 2
4.1 Illustrations ..... 2
4.2 Materials ..... 2
4.3 Markings ..... 2
4.4 Hardness ..... 2
4.5 Proof Torque ..... 3
4.6 Wrench Openings ..... 3
4.7 Finish ..... 3
4.8 Design ..... 3

**5 Test Procedures** ..... 4
5.1 Hardness ..... 4
5.2 Proof Torque Test ..... 4
5.3 Coating Process Qualification Test ..... 4

**6 Designations** ..... 7

**7 Safety Requirements and Limitations of Use** ..... 7

**Figures**
1 Finish Requirements ..... 3
2 Type I, II, and III Combination Wrench ..... 7

**Tables**
1 Type I, II, and III Combination Wrench (Customary Units) ..... 5
2 Type I, II, and III Combination Wrench (SI Units) ..... 6
3 Hexagon Mandrel Dimensions (Customary Units) ..... 8
4 Hexagon Mandrel Dimensions (SI Units) ..... 8




Copyright ASME International
Provided by IHS under license with ASME
No reproduction or networking permitted without license from IHS
Not for Resale

# COMBINATION WRENCHES (INCH AND METRIC SERIES)

## 1 SCOPE

This Standard provides the general, dimensional, performance, and safety requirements for combination wrenches. Inclusion of dimensional data in this Standard is not intended to imply that all of the products described herein are stock production sizes. Consumers are requested to consult with manufacturers concerning lists of stock production sizes.

## 2 CLASSIFICATION

*Combination wrench, open end, and 15 deg offset box opening*

**Type I** Regular length
**Type II** Short length
**Type III** Long length

## 3 NORMATIVE REFERENCES

The following documents form a part of this Standard to the extent specified herein. At the time of publication, the editions indicated were valid. All standards are subject to revision, and parties to agreements based on this Standard are encouraged to investigate the possibility of applying the most recent editions of the documents indicated below.

ASME B107.17M-1997 (R2002) Gages, Wrench Openings, Reference

Publisher: The American Society of Mechanical Engineers (ASME International), Three Park Avenue, New York, NY 10016-5990; Order Department: 22 Law Drive, PO Box 2300, Fairfield, NJ 07007-2300

ASTM E 18-97 Standard Test Methods for Rockwell Hardness and Rockwell Superficial Hardness of Metallic Materials

ASTM B 117-97 Standard Practice for Operating Salt Spray (Fog) Apparatus

ASTM B 537-70 Standard Practice for Rating of Electroplated Panels Subjected to Atmospheric Exposure

ASTM B 571-97 Standard Test Methods for Adhesion of Metallic Materials

ASTM D 968-93 Standard Test Methods for Abrasion Resistance of Organic Coatings by Falling Abrasive

Publisher: The American Society for Testing and Materials (ASTM), 100 Barr Harbor Drive, West Conshohocken, PA 19428-2959

Guide to Hand Tools-Selection, Safety Tips, Proper Use and Care

Publisher: Hand Tools Institute (HTI), 25 North Broadway, Tarrytown, NY 10591

## 4 REQUIREMENTS

### 4.1 Illustrations

The illustrations shown herein are descriptive and not restrictive, and are not intended to preclude the manufacture of wrenches which are otherwise in accordance with this Standard.

### 4.2 Materials

The materials used in the manufacturing of the wrenches shall be such as to produce wrenches conforming to this Standard.

### 4.3 Markings

Each wrench shall be marked on one of the faces or on the handle, as close to each head as is practical, in a legible and permanent manner with the respective nominal wrench opening as shown in the first column of the applicable table. In addition to size markings, each wrench shall be marked in a legible and permanent manner with manufacturer's name or trademark of such known character that the source of manufacture and country of origin may be readily determined.

### 4.4 Hardness

Wrenches shall be heat treated to a hardness of 38 HRC to 55 HRC when tested as specified in para. 5.1.



Copyright ASME International
Provided by IHS under license with ASME
No reproduction or networking permitted without license from IHS
Not for Resale

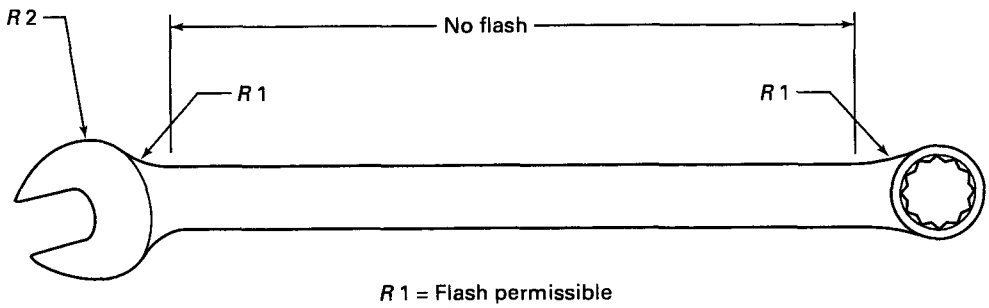


*R* 1 = Flash permissible
*R* 2 = No flash

**FIG. 1 FINISH REQUIREMENTS**

## 4.5 Proof Torque

When tested as specified, wrenches shall withstand the proof torque specified in the applicable tables without failure or permanent deformation (set), which might affect the durability or serviceability of the wrenches. Proof torque is a predetermined test torque to which a sample is subjected before acceptance.

## 4.6 Wrench Openings

Wrench openings shall be such as to ensure acceptance when gaged with gages conforming to ASME B107.17M.

## 4.7 Finish

**4.7.1 Surface Finish.** See Fig. 1. All surfaces shall be thoroughly cleaned, free from cracks, and essentially free from burrs, pits, nodules, and other detrimental conditions.

*(a) Minimum Area of Surface Finish.* A minimum of 180 deg of the outer periphery of the box ends (90 deg on each side of the longitudinal axis of the wrench) and both faces of the open end shall be bright and shall have a maximum roughness height value of 30 microinches (0.76 micrometers) (arithmetic average using a 0.03 in. cutoff on the surface measuring instrument). Wrenches with phosphate or oxide coatings are excluded from this requirement.

*(b) Flash.* Flash shall be completely removed from the periphery of the heads of all box ends, from the circumference of all open ends, and from that portion of the handle which shall be essentially straight and uniform in sectional dimensions, as shown in Fig 1. Any remaining flash on any surface shall blend smoothly with adjacent surfaces; external sharp edges shall be broken to 0.016 in. (0.38 mm) radius minimum, and shall not project more than 0.016 in. (0.38 mm) from adjacent surfaces.

**4.7.2 Coatings.** The coating shall be adherent, smooth, continuous, and free from uncoated areas, pits, blisters, nodules, and any other conditions, which would interfere with their protective value and serviceability. Plating contact marks should be kept to a minimum. The wrench shall be coated with one of the coatings in accordance with (a), (b), (c), or (d) below. The customer may specify the type of coating required.

*(a) Nickel-Chromium.* Wrenches shall have a protective-decorative nickel-chromium plating. The nickel thickness shall be a minimum of 0.000150 in. (0.0038 mm). The chromium thickness shall be a minimum of 0.000003 in. (0.000076 mm). A nickel-iron undercoating (16% iron max.) may be substituted for nickel.

*(b) Phosphate.* Wrenches shall have a chemically produced phosphate coating followed by a coating of rust preventative.

*(c) Oxide.* Oxide coated wrenches shall have a coating consisting of a chemically produced oxide followed by a coating of rust preventative.

*(d) Alternative Coatings.* Wrenches not falling within one of the coating types listed above shall be finished in accordance with predetermined requirements between manufacturer and customer. Alternative coatings may be used in lieu of Nickel-Chromium and shall be subjected to the Coating Process Qualification Test as specified in para. 5.3.

## 4.8 Design

The wrench shall have one open end and one box end of identical nominal size. The open end shall be suitable for use on hexagonal and square-headed bolts and nuts. The box opening shall have either a 6 or 12 point opening as specified. The wrench shall conform



Copyright ASME International
Provided by IHS under license with ASME
No reproduction or networking permitted without license from IHS
Not for Resale

to Tables 1 or 2 for the applicable style and shall be similar to Fig. 2.

Wrenches shall be so designed as to afford a well proportioned, comfortable handgrip, and be similar to the figure to which reference is made. The engaging surfaces of the wrench openings shall be finished in a smooth and well-defined manner. The corners and serrations in the box end openings shall be clearly defined (not smeared or torn). Wrenches that have a box end design shall be chamfered on both sides to provide a lead for the working surfaces. The tips (working ends) of all open ends shall also be chamfered or rounded to eliminate burrs (see Fig. 2).

## 5 TEST PROCEDURES

Many of the tests herein are inherently hazardous and adequate safeguards for personnel and property shall be employed in conducting these tests.

### 5.1 Hardness

Hardness shall be tested in accordance with ASTM E 18. When surface preparation is necessary, the amount of material removed shall not exceed 0.007 in. (0.18 mm) in the area contacted by the indenter.

### 5.2 Proof Torque Test

Proof Torque Test shall be conducted to determine conformance with the applicable proof torque requirement specified in para. 4.5.

**5.2.1 Wrench Preparation.** In order to prepare the wrench for test, suitable reference lines may be scribed on the head and handle. After application of proof torque, examination for permanent deformation shall be made.

**5.2.2 Mandrels for Wrench Openings.** Suitable mandrels shall be used to fit into the wrench opening and provide proper support and necessary strength for the proof torque applied. The wrenches shall be tested on hexagonal mandrels. Mandrels shall conform to the dimensions and tolerances of Tables 3 and 4. Mandrels shall be hardened to not less than 55 HRC and smoothly finished on the wrench engaging surfaces.

**5.2.3 Application of Proof Torque.** The proof torque specified in the applicable table is the torque applied to the test mandrel, which tends to rotate the mandrel about its longitudinal axis. Wrench openings shall be gaged prior to testing. The torque shall be applied to mandrels which are fully seated and extend through the wrenching surfaces. The force required to produce the torque shall be applied as far from the mandrel as practical.

*(a) Box Ends.* Box ends shall be torqued to the proof torque. Following the removal of the proof torque, they shall be regaged. Any box end which does not sustain the proof torque, cracks, fractures, slips on mandrel, or does not meet gage requirements after torquing has failed the test. Wrench failure has also occurred if there is visible permanent distortion in the handle and/or permanent deformation of the box end with respect to the handle in excess of 5 deg.

*(b) Open Ends.* Open ends shall be torqued to the proof torque. Following the removal of the proof torque, they shall be regaged. Open ends which do not sustain the proof torque, crack, fracture, slip on the mandrel or exhibit visible handle distortion have failed the test. Wrench failure has also occurred if the open end jaws spread in excess of the "NO GO" gage as specified by ASME B107.17M size by more than the following:

*(1)* 0.002 in. (0.05 mm) for wrench opening sizes $\frac{5}{32}$ in. (4 mm) through 1 in. (25 mm).

*(2)* 0.003 in. (0.08 mm) for wrench opening sizes $1\frac{1}{16}$ in. (26 mm) through $2\frac{1}{4}$ in. (50 mm).

### 5.3 Coating Process Qualification Test

Alternative coatings shall be subjected to testing in order to certify the manufacturer's production coating process. The Coating Process Test consists of an adhesion, abrasion, and corrosion test specified in paras. 5.3.2, 5.3.3, and 5.3.4. The Coating Process Qualification Test may also be performed to certify the manufacturer's Nickel-Chromium coating process. Passing the Coating Process Qualification tests, when agreed to by the customer, exempts the manufacturer from the Nickel-Chromium thickness requirement of para. 4.7.2(a). Retesting may be required when a significant change occurs in the process, when there is a change in the materials, or when contractually required by the customer.

**5.3.1 Test Preparation.** The quantity and condition of the sample wrenches used for the following testing shall be per the manufacturer's standard practice or as mutually agreed to by the manufacturer and the customer.

**5.3.2 Coating Process Adhesion Test.** Sample wrenches shall pass the file or grind-saw test of ASTM B 571.



Copyright ASME International
Provided by IHS under license with ASME
No reproduction or networking permitted without license from IHS
Not for Resale

## TABLE 1 TYPE I, II, AND III COMBINATION WRENCH (CUSTOMARY UNITS)

| Nominal Wrench Opening Across Flats, *A* or *B*, in. | Width of Open Head *W* Max., in. | Outside Diameter of Box Head, *OD* Max., in. | Permitted Eccentricity of Box Head Opening to Outside Diameter, Max., in. | Thickness of Heads, *T* | | Proof Torque | | Overall Length *L* | | | |
|---|---|---|---|---|---|---|---|---|---|---|---|
| | | | | | | | | Type I | | Type II | Type III |
| | | | | Open Head Max., in. | Box Head Max., in. | Open Head Min., lbf-in. | Box Head Min., lbf-in. | Min., in. | Max., in. | Max., in. | Min., in. |
| 1/8 | 0.359 | 0.297 | 0.015 | 0.141 | 0.172 | 20 | 60 | 2.500 | 4.625 | 3.125 | - |
| 5/32 | 0.438 | 0.313 | 0.015 | 0.141 | 0.172 | 35 | 90 | 2.750 | 4.750 | 3.250 | - |
| 3/16 | 0.500 | 0.375 | 0.015 | 0.172 | 0.203 | 45 | 150 | 2.875 | 4.875 | 3.375 | - |
| 7/32 | 0.563 | 0.406 | 0.015 | 0.172 | 0.234 | 50 | 165 | 3.000 | 5.000 | 3.500 | - |
| 1/4 | 0.654 | 0.478 | 0.015 | 0.205 | 0.295 | 67 | 220 | 3.000 | 5.125 | 3.625 | 4.250 |
| 9/32 | 0.688 | 0.500 | 0.015 | 0.215 | 0.280 | 78 | 248 | 3.250 | 5.500 | 3.750 | 4.500 |
| 5/16 | 0.811 | 0.572 | 0.015 | 0.223 | 0.330 | 138 | 275 | 3.250 | 5.875 | 4.250 | 5.000 |
| 11/32 | 0.813 | 0.612 | 0.015 | 0.237 | 0.335 | 193 | 275 | 3.250 | 6.250 | 4.500 | 5.500 |
| 3/8 | 0.906 | 0.663 | 0.015 | 0.250 | 0.344 | 275 | 605 | 3.500 | 6.625 | 4.750 | 5.938 |
| 7/16 | 0.996 | 0.730 | 0.015 | 0.281 | 0.391 | 413 | 715 | 4.500 | 7.312 | 5.750 | 6.375 |
| 1/2 | 1.192 | 0.824 | 0.015 | 0.344 | 0.394 | 550 | 1,020 | 5.250 | 8.062 | 6.000 | 6.938 |
| 9/16 | 1.272 | 0.924 | 0.018 | 0.375 | 0.425 | 770 | 1,500 | 5.750 | 9.000 | 6.375 | 7.500 |
| 5/8 | 1.402 | 1.000 | 0.018 | 0.380 | 0.500 | 1,100 | 2,200 | 6.000 | 10.000 | 6.625 | 8.125 |
| 11/16 | 1.536 | 1.094 | 0.020 | 0.400 | 0.535 | 1,375 | 2,640 | 6.500 | 11.000 | 7.126 | 8.938 |
| 3/4 | 1.672 | 1.175 | 0.020 | 0.406 | 0.594 | 1,650 | 2,860 | 6.750 | 12.000 | 7.250 | 9.750 |
| 13/16 | 1.828 | 1.344 | 0.020 | 0.516 | 0.609 | 2,200 | 3,300 | 7.125 | 13.000 | 7.500 | 10.250 |
| 7/8 | 1.938 | 1.375 | 0.023 | 0.516 | 0.688 | 2,475 | 3,630 | 9.625 | 14.000 | 7.750 | 11.500 |
| 15/16 | 2.078 | 1.469 | 0.023 | 0.594 | 0.701 | 3,025 | 4,510 | 10.500 | 15.000 | 8.125 | 12.500 |
| 1 | 2.250 | 1.531 | 0.020 | 0.625 | 0.719 | 3,575 | 5,390 | 11.375 | 15.500 | 8.500 | 13.500 |
| 1 1/16 | 2.344 | 1.688 | 0.023 | 0.625 | 0.790 | 3,850 | 5,940 | 13.000 | 16.250 | 8.750 | 14.500 |
| 1 1/8 | 2.500 | 1.724 | 0.023 | 0.656 | 0.860 | 4,400 | 6,430 | 14.000 | 17.750 | 9.125 | 15.500 |
| 1 3/16 | 2.630 | 1.813 | 0.023 | 0.688 | 0.890 | 5,200 | 7,200 | 15.000 | 18.250 | 9.400 | 16.310 |
| 1 1/4 | 2.766 | 1.906 | 0.023 | 0.719 | 0.940 | 5,775 | 7,920 | 15.750 | 19.500 | 9.750 | 16.750 |
| 1 5/16 | 2.938 | 2.063 | 0.027 | 0.719 | 0.940 | 6,600 | 8,400 | 16.500 | 21.000 | 10.125 | 18.500 |
| 1 3/8 | 3.063 | 2.113 | 0.027 | 0.750 | 0.940 | 7,425 | 8,970 | 17.250 | 21.500 | 10.500 | 19.375 |
| 1 7/16 | 3.188 | 2.227 | 0.027 | 0.813 | 0.953 | 8,250 | 9,240 | 18.000 | 22.250 | - | 20.375 |
| 1 1/2 | 3.375 | 2.395 | 0.027 | 0.813 | 1.008 | 8,500 | 10,365 | 18.750 | 23.000 | - | 21.375 |
| 1 9/16 | 3.563 | 2.438 | 0.027 | 0.813 | 1.031 | 8,750 | 11,495 | 19.500 | 23.500 | - | 22.250 |
| 1 5/8 | 3.625 | 2.641 | 0.031 | 0.813 | 1.063 | 9,000 | 12,800 | 20.250 | 24.500 | - | 22.375 |
| 1 11/16 | 3.750 | 2.790 | 0.031 | 0.813 | 1.063 | 10,500 | 13,570 | 20.750 | 25.000 | - | 23.375 |
| 1 3/4 | 4.000 | 2.938 | 0.031 | 0.875 | 1.125 | 11,100 | 14,300 | 21.750 | 26.500 | - | 24.250 |
| 1 13/16 | 4.188 | 2.938 | 0.037 | 0.875 | 1.125 | 11,750 | 15,100 | 22.500 | 27.500 | - | 25.250 |
| 1 7/8 | 4.344 | 3.125 | 0.037 | 0.938 | 1.125 | 12,400 | 15,900 | 23.250 | 29.000 | - | 26.250 |
| 2 | 4.469 | 3.125 | 0.037 | 0.938 | 1.125 | 13,650 | 17,400 | 23.875 | 29.000 | - | 27.250 |
| 2 1/16 | 4.594 | 3.313 | 0.037 | 0.938 | 1.234 | 14,300 | 18,200 | 23.938 | 30.250 | - | - |
| 2 1/8 | 5.000 | 3.313 | 0.046 | 0.938 | 1.234 | 14,900 | 19,000 | 24.875 | 30.750 | - | - |
| 2 3/16 | 5.000 | 3.313 | 0.046 | 0.938 | 1.234 | 15,500 | 19,700 | 24.875 | 31.250 | - | - |
| 2 1/4 | 5.000 | 3.313 | 0.050 | 0.938 | 1.234 | 16,200 | 20,500 | 24.875 | 31.750 | - | - |



Copyright ASME International
Provided by IHS under license with ASME
No reproduction or networking permitted without license from IHS

Not for Resale

## TABLE 2 TYPE I, II, AND III COMBINATION WRENCH (SI UNITS)

| Nominal Wrench Opening Across Flats, *A* or *B*, mm | Width of Open Head, *W* Max., mm | Outside Diameter of Box Head, *OD* Max., mm | Permitted Eccentricity of Box Head Opening to Outside Diameter Max., mm | Thickness of Heads, *T* | | Proof Torque | | Overall Length *L* | | | |
|---|---|---|---|---|---|---|---|---|---|---|---|
| | | | | | | | | Type I | | Type II | Type III |
| | | | | Open Head Max., mm | Box Head Max., mm | Open Head Min., N·m | Box Head Min., N·m | Min., mm | Max., mm | Max., mm | Min., mm |
| 4 | 10.8 | 7.6 | 0.38 | 3.7 | 4.0 | 4 | 12 | - | - | 75 | - |
| 5 | 12.5 | 9.0 | 0.38 | 3.9 | 4.6 | 5 | 17 | - | - | 79 | - |
| 5.5 | 15.5 | 11.8 | 0.38 | 5.3 | 6.0 | 5 | 18 | 70 | 130 | 82 | 120 |
| 6 | 17.3 | 12.7 | 0.38 | 5.8 | 7.4 | 7 | 20 | 76 | 135 | 85 | 125 |
| 7 | 18.3 | 14.3 | 0.38 | 6.3 | 7.7 | 8 | 27 | 84 | 145 | 88 | 129 |
| 8 | 21.4 | 15.0 | 0.38 | 6.3 | 8.2 | 15 | 30 | 92 | 155 | 92 | 137 |
| 9 | 21.8 | 17.4 | 0.38 | 6.6 | 9.0 | 21 | 40 | 100 | 170 | 100 | 143 |
| 10 | 26.0 | 18.8 | 0.38 | 6.9 | 9.0 | 31 | 71 | 115 | 185 | 115 | 163 |
| 11 | 26.0 | 19.9 | 0.38 | 7.0 | 10.0 | 46 | 80 | 125 | 195 | 125 | 177 |
| 12 | 27.7 | 21.4 | 0.46 | 8.0 | 10.0 | 49 | 91 | 135 | 205 | 135 | 190 |
| 13 | 30.2 | 23.1 | 0.46 | 8.9 | 10.5 | 62 | 115 | 140 | 215 | 140 | 200 |
| 14 | 32.8 | 24.4 | 0.46 | 8.9 | 11.5 | 86 | 158 | 148 | 229 | 150 | 214 |
| 15 | 34.8 | 26.0 | 0.46 | 8.9 | 11.5 | 104 | 200 | 153 | 245 | 155 | 226 |
| 16 | 36.4 | 27.0 | 0.46 | 9.4 | 12.1 | 124 | 248 | 157 | 260 | 160 | 231 |
| 17 | 39.7 | 29.3 | 0.46 | 9.8 | 12.7 | 139 | 267 | 163 | 275 | 165 | 241 |
| 18 | 41.3 | 29.3 | 0.46 | 10.0 | 12.7 | 155 | 304 | 170 | 290 | 170 | 250 |
| 19 | 42.7 | 31.2 | 0.46 | 10.1 | 14.8 | 186 | 323 | 182 | 305 | 185 | 265 |
| 20 | 46.4 | 32.9 | 0.51 | 11.4 | 14.8 | 217 | 347 | 190 | 335 | 190 | 275 |
| 21 | 47.6 | 33.8 | 0.51 | 11.7 | 16.3 | 248 | 372 | 195 | 350 | 195 | 290 |
| 22 | 48.3 | 35.6 | 0.51 | 12.0 | 16.3 | 279 | 408 | 200 | 365 | 200 | 305 |
| 23 | 52.4 | 37.3 | 0.51 | 12.4 | 16.5 | 310 | 455 | 205 | 384 | 205 | 315 |
| 24 | 53.5 | 38.1 | 0.51 | 12.5 | 17.8 | 341 | 509 | 210 | 396 | 210 | 330 |
| 25 | 55.7 | 40.2 | 0.51 | 12.7 | 17.9 | 372 | 559 | 259 | 409 | - | 345 |
| 26 | 57.2 | 42.2 | 0.58 | 14.0 | 18.0 | 403 | 608 | 280 | 415 | - | 367 |
| 27 | 60.2 | 44.2 | 0.58 | 14.7 | 19.8 | 432 | 671 | 300 | 430 | - | 374 |
| 28 | 62.3 | 45.3 | 0.58 | 14.9 | 19.8 | 497 | 710 | 320 | 445 | - | 387 |
| 29 | 65.5 | 45.3 | 0.58 | 14.9 | 19.8 | 514 | 750 | 340 | 460 | - | 390 |
| 30 | 67.0 | 47.5 | 0.58 | 15.2 | 20.0 | 570 | 795 | 365 | 475 | - | 395 |
| 31 | 68.6 | 48.6 | 0.58 | 15.2 | 20.5 | 610 | 850 | 395 | 490 | - | 420 |
| 32 | 71.0 | 49.8 | 0.58 | 15.7 | 22.0 | 650 | 905 | 405 | 505 | - | 425 |
| 33 | 73.0 | 50.3 | 0.58 | 15.7 | 22.3 | 700 | 950 | 425 | 535 | - | 454 |
| 34 | 75.0 | 52.0 | 0.58 | 16.0 | 23.2 | 745 | 994 | 445 | 565 | - | - |
| 36 | 76.8 | 56.1 | 0.58 | 19.0 | 25.1 | 894 | 1165 | 480 | 615 | - | - |
| 41 | 88.9 | 62.9 | 0.70 | 19.3 | 25.3 | 1154 | 1579 | 535 | 665 | - | - |
| 46 | 95.3 | 68.0 | 0.70 | 22.4 | 25.8 | 1453 | 2067 | 585 | 715 | - | - |
| 50 | 103.2 | 76.0 | 0.70 | 25.0 | 27.6 | 1716 | 2512 | 635 | 765 | - | - |



Copyright ASME International
Provided by IHS under license with ASME
No reproduction or networking permitted without license from IHS

Not for Resale

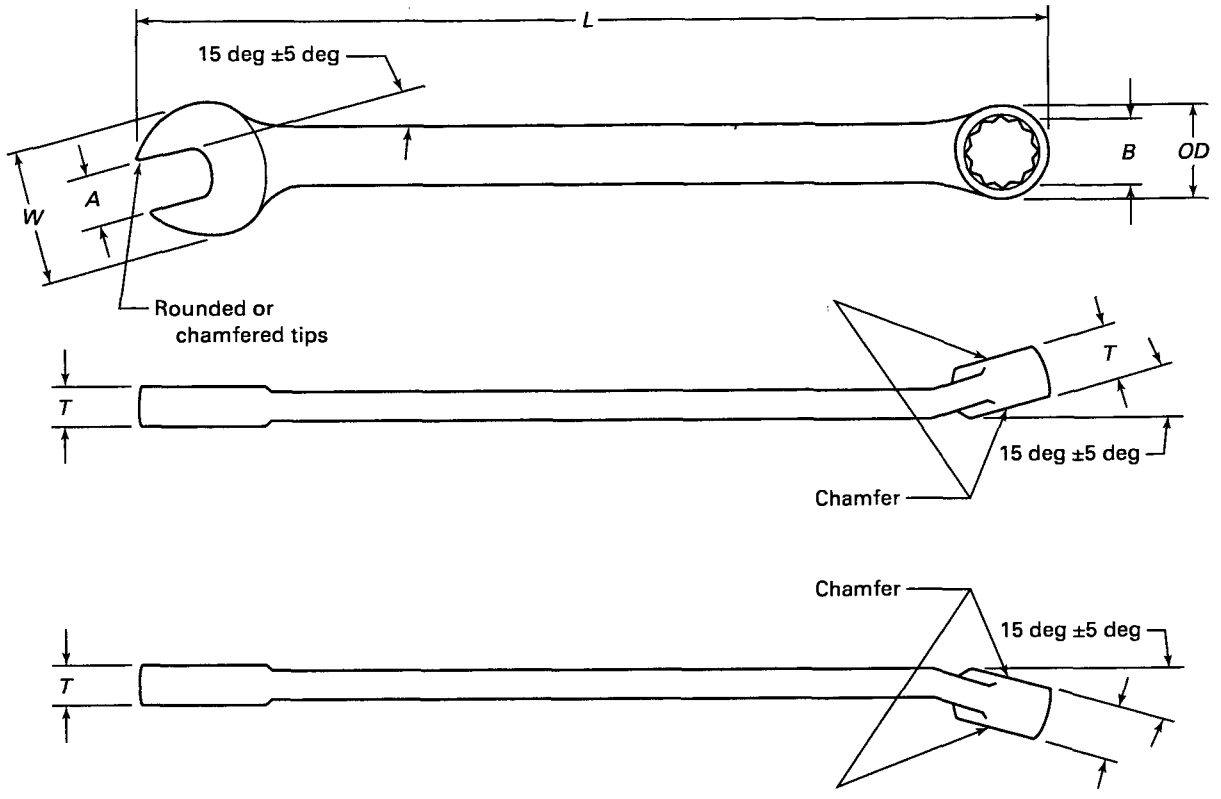


**FIG. 2 TYPE I, II, AND III COMBINATION WRENCH**

**5.3.3 Coating Process Abrasion Test.** Sample wrenches shall have no base material exposed when subjected to 100 L of falling sand test of ASTM D 968 Method A.

**5.3.4 Coating Process Corrosion Test.** Sample wrenches shall be tested for corrosion resistance by exposure to a 48 hr salt spray test, as specified in ASTM B 117, without falling below the ASTM B 537 rating of 6.

## 6 DESIGNATIONS

Wrenches shall be designated by the following data in the sequence shown:

*(a)* Type
*(b)* Size of openings
*(c)* Configuration of openings
*(d)* Coating

EXAMPLE: Combination Wrench Type I, Regular Length, ½ in. openings, 12 point openings, Nickel-chrome.

## 7 SAFETY REQUIREMENTS AND LIMITATIONS OF USE

Instructors and employers shall stress proper use and safety in the use of wrenches, information about which can be found in the HTI publication, Guide to Hand Tools-Selection, Safety Tips, Proper Use and Care.



Copyright ASME International
Provided by IHS under license with ASME
No reproduction or networking permitted without license from IHS
Not for Resale

## TABLE 3 HEXAGON MANDREL DIMENSIONS (CUSTOMARY UNITS)

| Nominal Size of Wrench Opening, in. | Hexagon Mandrel Dimensions, in. | | |
|---|---|---|---|
| | Across Flats Tolerance | | Across Corners, Min., in. [Note (1)] |
| | Plus | Minus | |
| 1/8 | 0.001 | 0.002 | 0.1403 |
| 5/32 | 0.001 | 0.002 | 0.1745 |
| 13/64 | 0.001 | 0.002 | 0.2095 |
| 3/16 | 0.001 | 0.002 | 0.2268 |
| 7/32 | 0.001 | 0.002 | 0.2440 |
| 15/64 | 0.001 | 0.002 | 0.2610 |
| 1/4 | 0.001 | 0.002 | 0.2780 |
| 9/32 | 0.001 | 0.002 | 0.3133 |
| 5/16 | 0.001 | 0.002 | 0.3495 |
| 11/32 | 0.001 | 0.002 | 0.3860 |
| 3/8 | 0.001 | 0.002 | 0.4225 |
| 7/16 | 0.001 | 0.002 | 0.4935 |
| 1/2 | 0.001 | 0.003 | 0.5635 |
| 9/16 | 0.001 | 0.003 | 0.6339 |
| 5/8 | 0.001 | 0.003 | 0.7055 |
| 11/16 | 0.001 | 0.003 | 0.7769 |
| 3/4 | 0.001 | 0.003 | 0.8485 |
| 13/16 | 0.001 | 0.003 | 0.9201 |
| 7/8 | 0.001 | 0.003 | 0.9917 |
| 15/16 | 0.001 | 0.003 | 1.0631 |
| 1 | 0.001 | 0.003 | 1.1297 |
| 1 1/16 | 0.001 | 0.003 | 1.2013 |
| 1 1/8 | 0.001 | 0.003 | 1.2728 |
| 1 3/16 | 0.001 | 0.003 | 1.343 |
| 1 1/4 | 0.001 | 0.003 | 1.416 |
| 1 5/16 | 0.001 | 0.003 | 1.487 |
| 1 3/8 | 0.001 | 0.003 | 1.559 |
| 1 7/16 | 0.001 | 0.003 | 1.631 |
| 1 1/2 | 0.001 | 0.003 | 1.702 |
| 1 9/16 | 0.001 | 0.007 | 1.770 |
| 1 5/8 | 0.001 | 0.007 | 1.841 |
| 1 11/16 | 0.001 | 0.007 | 1.912 |
| 1 3/4 | 0.001 | 0.007 | 1.983 |
| 1 13/16 | 0.001 | 0.007 | 2.054 |
| 1 7/8 | 0.001 | 0.007 | 2.124 |
| 1 15/16 | 0.001 | 0.007 | 2.195 |
| 2 | 0.001 | 0.007 | 2.266 |
| 2 1/16 | 0.001 | 0.007 | 2.337 |
| 2 1/8 | 0.001 | 0.007 | 2.408 |
| 2 3/16 | 0.001 | 0.007 | 2.479 |
| 2 1/4 | 0.001 | 0.007 | 2.549 |

NOTE:
(1) For sizes not listed, multiply nominal size by 1.133055 for mandrel dimension across corners. Applicable to mandrels over 1 1/2 in. nominal size.

## TABLE 4 HEXAGON MANDREL DIMENSIONS (SI UNITS)

| Nominal Size of Wrench Opening, mm | Hexagon Mandrel Dimensions, mm | | |
|---|---|---|---|
| | Across Flats Tolerance | | Across Corners, Min., mm [Note (1)] |
| | Plus | Minus | |
| 3.2 | 0.025 | 0.050 | 3.57 |
| 4 | 0.025 | 0.050 | 4.46 |
| 5 | 0.025 | 0.050 | 5.58 |
| 5.5 | 0.025 | 0.050 | 6.13 |
| 6 | 0.025 | 0.050 | 6.68 |
| 6.3 | 0.025 | 0.050 | 7.02 |
| 7 | 0.025 | 0.050 | 7.79 |
| 8 | 0.025 | 0.050 | 8.95 |
| 9 | 0.025 | 0.050 | 10.11 |
| 10 | 0.025 | 0.050 | 11.27 |
| 11 | 0.025 | 0.050 | 12.40 |
| 12 | 0.025 | 0.076 | 13.53 |
| 13 | 0.025 | 0.076 | 14.67 |
| 14 | 0.025 | 0.076 | 15.80 |
| 15 | 0.025 | 0.076 | 16.92 |
| 16 | 0.025 | 0.076 | 18.06 |
| 17 | 0.025 | 0.076 | 19.20 |
| 18 | 0.025 | 0.076 | 20.35 |
| 19 | 0.025 | 0.076 | 21.49 |
| 20 | 0.025 | 0.076 | 22.64 |
| 21 | 0.025 | 0.076 | 23.78 |
| 22 | 0.025 | 0.076 | 24.93 |
| 23 | 0.025 | 0.076 | 26.07 |
| 24 | 0.025 | 0.076 | 27.20 |
| 25 | 0.025 | 0.076 | 28.27 |
| 26 | 0.025 | 0.076 | 29.38 |
| 27 | 0.025 | 0.076 | 30.53 |
| 28 | 0.025 | 0.076 | 31.67 |
| 29 | 0.025 | 0.076 | 32.81 |
| 30 | 0.025 | 0.076 | 33.96 |
| 31 | 0.025 | 0.076 | 35.10 |
| 32 | 0.025 | 0.076 | 36.25 |
| 33 | 0.025 | 0.076 | 37.38 |
| 34 | 0.025 | 0.076 | 38.52 |
| 35 | 0.025 | 0.076 | 39.68 |
| 36 | 0.025 | 0.076 | 40.83 |
| 38 | 0.025 | 0.076 | 43.11 |
| 40 | 0.025 | 0.177 | 45.32 |
| 41 | 0.025 | 0.177 | 46.45 |
| 42 | 0.025 | 0.177 | 47.59 |
| 46 | 0.025 | 0.177 | 52.12 |
| 50 | 0.025 | 0.177 | 56.65 |

NOTE:
(1) For sizes not listed, multiply nominal size by 1.133055 for mandrel dimension across corners. Applicable to mandrels over 38 mm nominal size.



Copyright ASME International
Provided by IHS under license with ASME
No reproduction or networking permitted without license from IHS
Not for Resale

# ASME B107.9

**1 Scope** ..... 10

**2 Classification** ..... 10

**3 Normative References** ..... 10

**4 Requirements** ..... 10
4.1 Illustrations ..... 10
4.2 Materials ..... 10
4.3 Markings ..... 10
4.4 Hardness ..... 11
4.5 Proof Torque ..... 11
4.6 Wrench Opening ..... 11
4.7 Finish ..... 11
4.8 Design ..... 11

**5 Test Procedures** ..... 12
5.1 Hardness ..... 12
5.2 Proof Torque Test ..... 12
5.3 Coating Process Qualification Test ..... 18

**6 Designations** ..... 18

**7 Safety Requirements and Limitations of Use** ..... 18

***Figures***
1 Finish Requirements ..... 11
2A Type I Box Wrench ..... 12
2B Type I Box Wrench (Alternate Construction) ..... 12
3 Type II Box Wrench ..... 13
4 Type III Box Wrench ..... 13

**Tables**
1 Type I, II, and III Box Wrench (Customary Units) ..... 14
2 Type I, II, and III Box Wrench (SI Units) ..... 16
3 Hexagon Mandrel Dimensions (Customary Units) ..... 19
4 Hexagon Mandrel Dimensions (SI Units) ..... 19



Copyright ASME International
Provided by IHS under license with ASME
No reproduction or networking permitted without license from IHS Not for Resale

# BOX WRENCHES
# DOUBLE HEAD (INCH AND METRIC SERIES)

## 1 SCOPE

This Standard provides the general, dimensional, performance, and safety requirements for box wrenches. Inclusion of dimensional data in this Standard is not intended to imply that all of the products described herein are stock production sizes. Consumers are requested to consult with manufacturers concerning lists of stock production sizes.

## 2 CLASSIFICATION

*Box wrench, double head*

| | |
|---|---|
| **Type I** | 15 deg offset each end |
| *Class 1* | Regular length |
| *Class 2* | Short length |
| **Type II** | modified offset each end |
| *Class 1* | Regular length |
| *Class 2* | Short length |
| **Type III** | deep offset each end |
| *Class 1* | Regular length |
| *Class 2* | Short length |

## 3 NORMATIVE REFERENCES

The following documents form a part of this Standard to the extent specified herein. At the time of publication, the editions indicated were valid. All standards are subject to revision, and parties to agreements based on this Standard are encouraged to investigate the possibility of applying the most recent editions of the documents indicated below.

ASME B107.17M-1997 Gages, Wrench Openings, Reference

Publisher: The American Society of Mechanical Engineers (ASME International), Three Park Avenue, New York, NY 10016-5990; Order Department: 22 Law Drive, PO Box 2300, Fairfield, NJ 07007-2300

ASTM E 18-97 Standard Test Methods for Rockwell Hardness and Rockwell Superficial Hardness of Metallic Materials

ASTM B 117-97 Standard Practice for Operating Salt Spray (Fog) Apparatus

ASTM B 537-70 Standard Practice for Rating of Electroplated Panels Subjected to Atmospheric Exposure

ASTM B 571-97 Standard Test Methods for Adhesion of Metallic Materials

ASTM D 968-93 Standard Test Methods for Abrasion Resistance of Organic Coatings by Falling Abrasive

Publisher: The American Society for Testing and Materials (ASTM), 100 Barr Harbor Drive, West Conshohocken, PA 19428-2959

Guide to Hand Tools-Selection, Safety Tips, Proper Use and Care

Publisher: Hand Tools Institute (HTI), 25 North Broadway, Tarrytown, NY 10591

## 4 REQUIREMENTS

### 4.1 Illustrations

The illustrations shown herein are descriptive and not restrictive, and are not intended to preclude the manufacture of wrenches, which are otherwise in accordance with this Standard.

### 4.2 Materials

The materials used in the manufacturing of the wrenches shall be such as to produce wrenches conforming to the physical requirements hereinafter described.

### 4.3 Markings

Each wrench shall be marked on the handle as close to each head as is practical, in a legible and permanent manner with the respective nominal wrench opening as shown in the first column of the applicable table. In addition to size markings, each wrench shall be marked in a legible and permanent manner with manufacturer's name or trademark of such known character that the source of manufacture and country of origin may be readily determined.



Copyright ASME International
Provided by IHS under license with ASME
No reproduction or networking permitted without license from IHS

Not for Resale

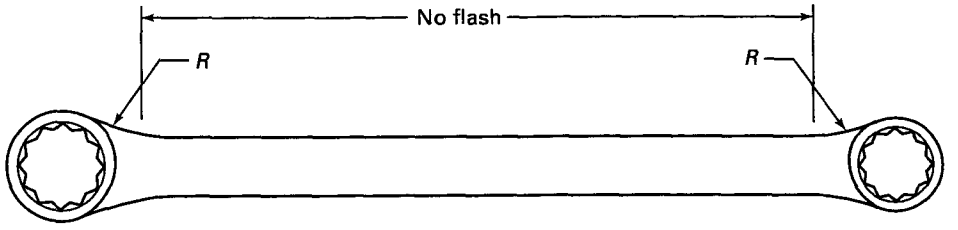


*R* = Flash permissible for Type I, II, and III wrenches

**FIG. 1 FINISH REQUIREMENTS**

### 4.4 Hardness

Wrenches shall be heat treated to a hardness of 38 HRC to 55 HRC when tested as specified in para. 5.1.

### 4.5 Proof Torque

When tested as specified, wrenches shall withstand the proof torque specified in the applicable tables without failure or permanent deformation (set), which might affect the durability or serviceability of the wrenches. Proof torque is a predetermined test torque to which a sample is subjected before acceptance.

### 4.6 Wrench Opening

Wrench openings shall be such as to ensure acceptance when gaged with gages conforming to ASME B107.17M.

### 4.7 Finish

**4.7.1 Surface Finish.** See Fig. 1. All surfaces shall be thoroughly cleaned, free from cracks, and essentially free from burrs, pits, nodules, and other detrimental conditions.

*(a) Minimum Area of Surface Finish.* A minimum of 180 deg of the outer periphery of the box ends (90 deg on each side of the longitudinal axis of the wrench) and shall have a maximum roughness height value of 30 μin. (0.76 μm) (arithmetic average using a 0.03 in. cutoff on the surface measuring instrument). Wrenches with phosphate or oxide coatings are excluded from this requirement.

*(b) Flash.* Flash shall be completely removed from the periphery of the heads of all box wrenches, from the circumference of all open end wrenches, and from that portion of the handle which shall be essentially straight and uniform in sectional dimensions, as shown in Fig. 1. Any remaining flash on any surface shall blend smoothly with adjacent surfaces; external sharp edges shall be broken to 0.016 in. (0.38 mm) radius minimum, and shall not project more than 0.016 in. (0.38 mm) from adjacent surfaces.

**4.7.2 Coatings.** The coating shall be adherent, smooth, continuous, and free from uncoated areas, pits, blisters, nodules, and any other conditions, which would interfere with their protective value and serviceability. Plating contact marks should be kept to a minimum. The wrench shall be coated with one of the coatings in accordance with (a), (b), (c), or (d) below. The customer may specify the type of coating required.

*(a) Nickel-Chromium.* Wrenches shall have a protective-decorative nickel-chromium plating. The nickel thickness shall be a minimum of 0.000150 in. (0.0038 mm). The chromium thickness shall be a minimum of 0.000003 in. (0.000076 mm). A nickel-iron undercoating (16% iron max.) may be substituted for nickel.

*(b) Phosphate.* Wrenches shall have a chemically produced phosphate coating followed by a coating of rust preventative.

*(c) Oxide.* Oxide coated wrenches shall have a coating consisting of a chemically produced oxide followed by a coating of rust preventative.

*(d) Alternative Coatings.* Wrenches not falling within one of the coating types listed above shall be finished in accordance with predetermined requirements between manufacturer and customer. Alternative coatings may be used in lieu of Nickel-Chromium and shall be subjected to the Coating Process Qualification Test as specified in para. 5.3.

### 4.8 Design

The wrench shall have two box openings of differing sizes and shall have either a 6 or 12 point opening on both ends as specified. The wrenches shall conform to Tables 1 or 2 as applicable. Wrenches shall be so designed as to afford a well proportioned, comfortable handgrip, and be similar to the figure to which reference is made. The engaging surfaces of the wrench openings shall be finished in a smooth and well-defined manner.



Copyright ASME International
Provided by IHS under license with ASME
No reproduction or networking permitted without license from IHS
Not for Resale

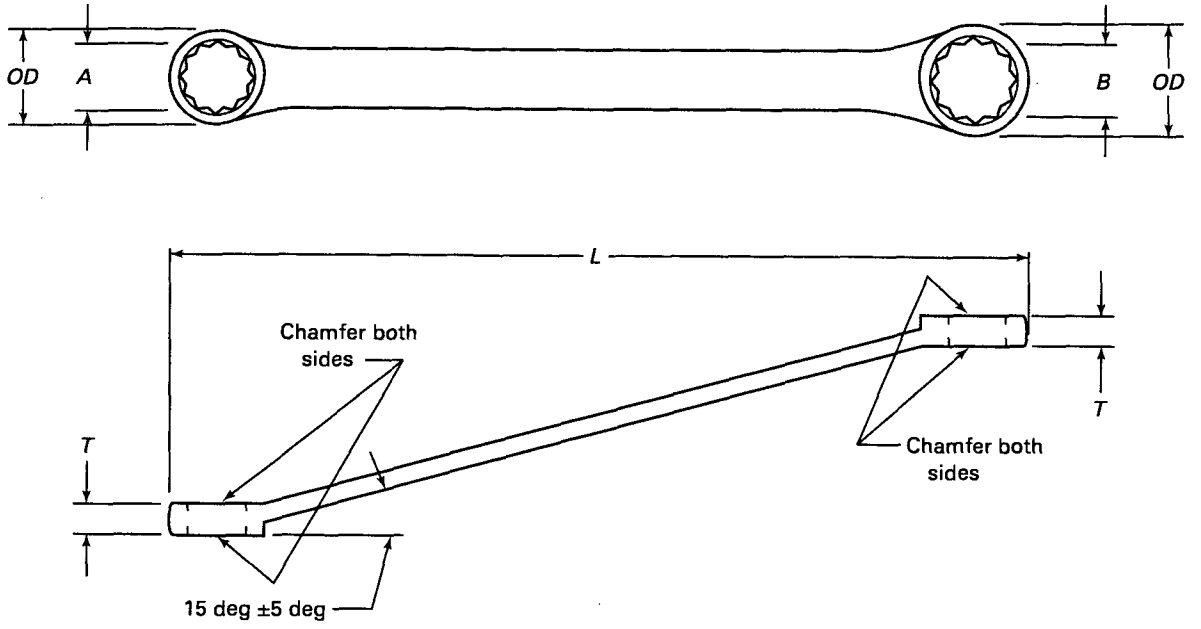


**FIG. 2A TYPE I BOX WRENCH**

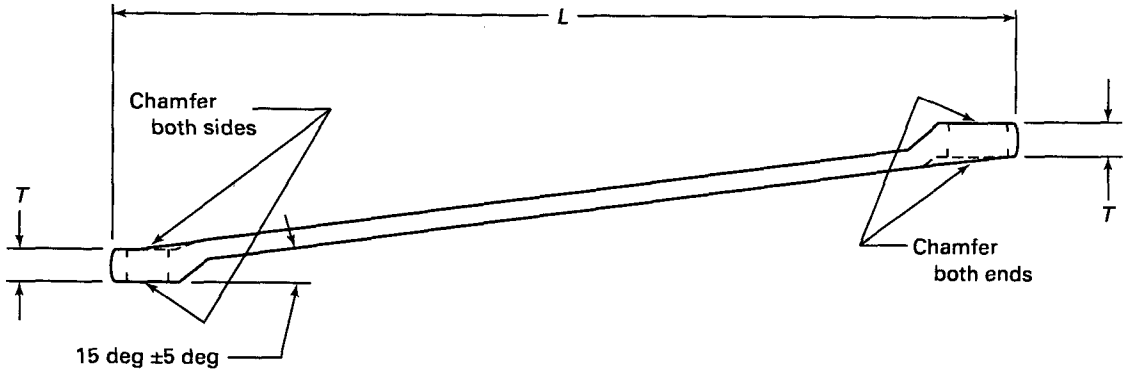


**FIG. 2B TYPE I BOX WRENCH (ALTERNATE CONSTRUCTION)**

The corners and serrations in the box wrench openings shall be clearly defined (not smeared or torn). The box ends of Type I shall be chamfered on both sides to provide a lead for the working surfaces and shall be similar to Figs. 2A and 2B. The box ends of Type II shall be chamfered on at least one side and shall be similar to Fig. 3. The box ends of Type III shall be chamfered on at least one side and shall be similar to Fig. 4.

## 5 TEST PROCEDURES

Many of the tests herein are inherently hazardous and adequate safeguards for personnel and property shall be employed in conducting these tests.

### 5.1 Hardness

Hardness shall be tested in accordance with ASTM E 18. When surface preparation is necessary, the amount of material removed shall not exceed 0.007 in. (0.18 mm) in the area contacted by the indenter.

### 5.2 Proof Torque Test

Proof Torque Test shall be conducted to determine conformance with the applicable proof torque requirements specified in para. 4.5.

**5.2.1 Wrench Preparation.** In order to prepare the wrench for test, suitable reference lines may be scribed on the heads and handle. After application of



Copyright ASME International
Provided by IHS under license with ASME
No reproduction or networking permitted without license from IHS
Not for Resale

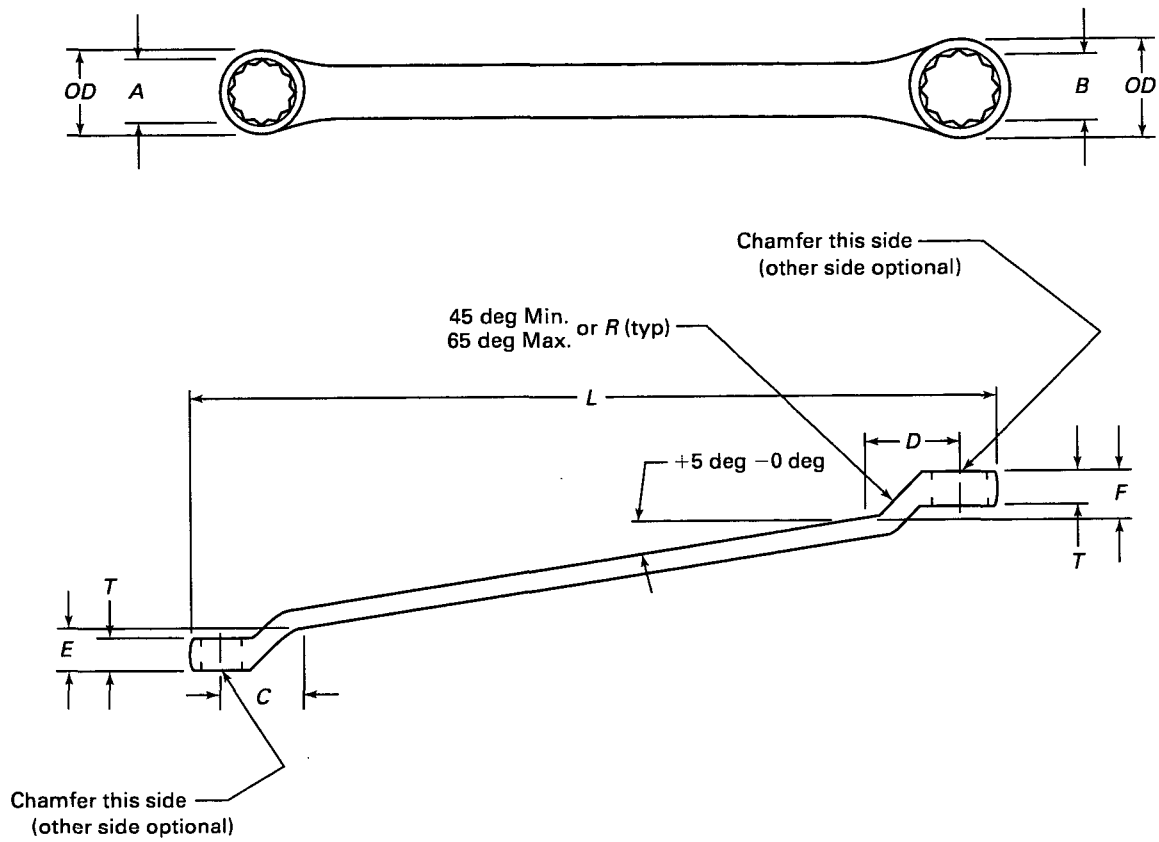


**FIG. 3 TYPE II BOX WRENCH**

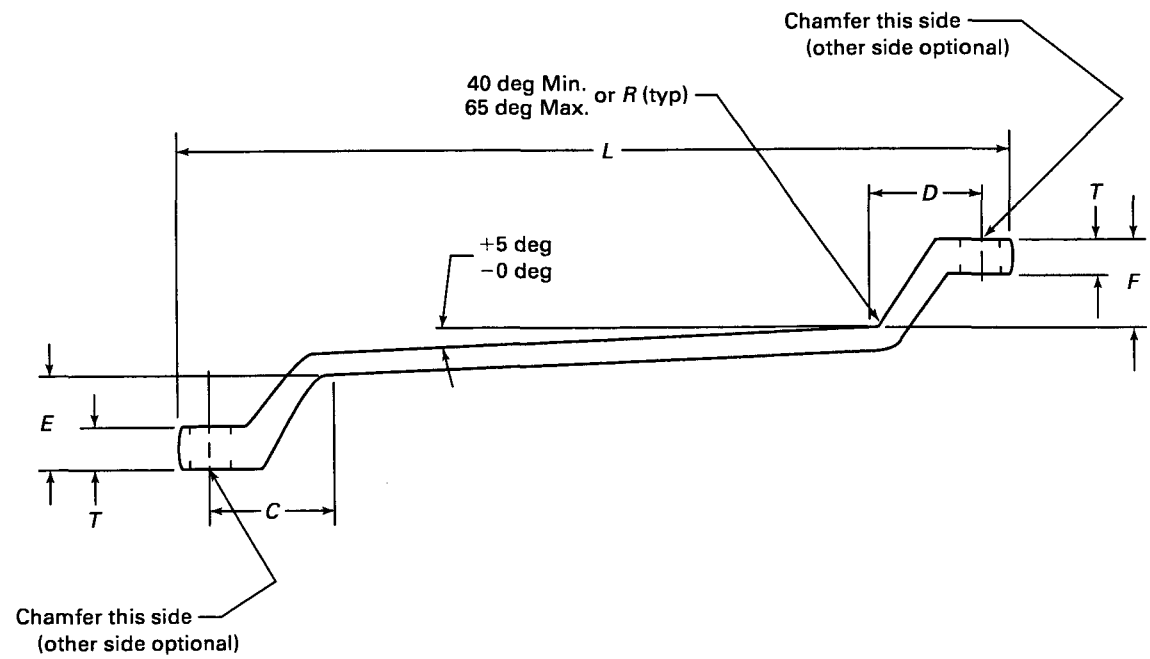


**FIG. 4 TYPE III BOX WRENCH**



Copyright ASME International
Provided by IHS under license with ASME
No reproduction or networking permitted without license from IHS
Not for Resale

## TABLE 1 TYPE I, II, AND III BOX WRENCH (CUSTOMARY UNITS)

| Nominal Wrench Opening Across Flats | | Outside Diameter of Box Head *OD* | | Permitted Eccentricity of Box Head Opening to Outside Diameter | | Thickness of Box Head, *T* | | Center Line of Opening to Point Where Offset Blends With Handle C and D | | | |
|---|---|---|---|---|---|---|---|---|---|---|---|
| | | | | | | | | Type II | | Type III | |
| Small Head, *A* in. | Large Head, *B* in. | Small Head, *A* Max., in. | Large Head, *B* Max., in. | Small Head, *A* Max., in. | Large Head, *B* Max., in. | Small Head, *A* Max., in. | Large Head, *B* Max., in. | Small Head, *A* Max., in. | Large Head, *B* Max., in. | Small Head, *A* Max., in. | Large Head, *B* Max., in. |
| 3/16 | 13/64 | 0.375 | 0.391 | 0.015 | 0.015 | 0.203 | 0.203 | 0.906 | 0.906 | 0.906 | 0.906 |
| 3/16 | 7/32 | 0.375 | 0.406 | 0.015 | 0.015 | 0.203 | 0.234 | - | - | 0.906 | 0.969 |
| 7/32 | 15/64 | 0.406 | 0.406 | 0.015 | 0.015 | 0.234 | 0.234 | 0.969 | 1.125 | 0.969 | 1.031 |
| 7/32 | 1/4 | 0.406 | 0.478 | 0.015 | 0.015 | 0.234 | 0.295 | 0.969 | 1.125 | 0.969 | 1.250 |
| 1/4 | 9/32 | 0.478 | 0.500 | 0.015 | 0.015 | 0.295 | 0.300 | 1.125 | 1.125 | 1.250 | 1.250 |
| 1/4 | 5/16 | 0.478 | 0.572 | 0.015 | 0.015 | 0.295 | 0.330 | 1.125 | 1.125 | 1.250 | 1.375 |
| 5/16 | 11/32 | 0.572 | 0.612 | 0.015 | 0.015 | 0.330 | 0.335 | 1.125 | 1.188 | 1.375 | 1.375 |
| 5/16 | 3/8 | 0.572 | 0.663 | 0.015 | 0.015 | 0.330 | 0.344 | 1.125 | 1.188 | 1.375 | 1.375 |
| 3/8 | 7/16 | 0.663 | 0.730 | 0.015 | 0.015 | 0.344 | 0.391 | 1.188 | 1.375 | 1.375 | 1.375 |
| 7/16 | 1/2 | 0.730 | 0.824 | 0.015 | 0.015 | 0.391 | 0.394 | 1.375 | 1.603 | 1.375 | 1.438 |
| 7/16 | 9/16 | 0.730 | 0.924 | 0.015 | 0.018 | 0.391 | 0.425 | - | - | 1.375 | 1.438 |
| 1/2 | 9/16 | 0.824 | 0.924 | 0.015 | 0.018 | 0.394 | 0.425 | 1.603 | 1.792 | 1.438 | 1.438 |
| 9/16 | 5/8 | 0.924 | 1.000 | 0.018 | 0.018 | 0.425 | 0.531 | 1.792 | 2.051 | 1.438 | 1.563 |
| 19/32 | 25/32 | 0.969 | 1.250 | 0.018 | 0.020 | 0.438 | 0.602 | - | - | - | - |
| 5/8 | 11/16 | 1.000 | 1.109 | 0.018 | 0.020 | 0.531 | 0.535 | 2.051 | 2.217 | 1.563 | 1.563 |
| 5/8 | 3/4 | 1.000 | 1.175 | 0.018 | 0.020 | 0.531 | 0.594 | 2.051 | 2.276 | 1.563 | 1.688 |
| 11/16 | 3/4 | 1.109 | 1.175 | 0.020 | 0.020 | 0.535 | 0.594 | 2.217 | 2.276 | 1.563 | 1.688 |
| 11/16 | 13/16 | 1.109 | 1.344 | 0.020 | 0.020 | 0.535 | 0.609 | - | - | 1.563 | 1.688 |
| 3/4 | 13/16 | 1.175 | 1.344 | 0.020 | 0.020 | 0.594 | 0.609 | 2.276 | 2.477 | - | - |
| 3/4 | 7/8 | 1.175 | 1.375 | 0.020 | 0.020 | 0.594 | 0.688 | 2.276 | 2.518 | 1.688 | 1.750 |
| 13/16 | 7/8 | 1.344 | 1.375 | 0.020 | 0.020 | 0.609 | 0.688 | 2.477 | 2.518 | 1.688 | 1.750 |
| 13/16 | 15/16 | 1.344 | 1.469 | 0.020 | 0.023 | 0.609 | 0.701 | - | - | 1.688 | 2.063 |
| 7/8 | 15/16 | 1.375 | 1.469 | 0.020 | 0.023 | 0.688 | 0.701 | 2.518 | 2.790 | 1.750 | 2.063 |
| 15/16 | 1 | 1.469 | 1.531 | 0.023 | 0.023 | 0.701 | 0.719 | 2.790 | 2.826 | 2.063 | 2.063 |
| 15/16 | 1 1/16 | 1.469 | 1.688 | 0.023 | 0.023 | 0.701 | 0.790 | - | - | - | - |
| 1 | 1 1/16 | 1.531 | 1.688 | 0.023 | 0.023 | 0.719 | 0.790 | 2.826 | 3.500 | - | - |
| 1 1/16 | 1 1/8 | 1.688 | 1.724 | 0.023 | 0.023 | 0.790 | 0.860 | 3.500 | 3.875 | 2.188 | 2.438 |
| 1 1/16 | 1 1/4 | 1.688 | 1.906 | 0.023 | 0.023 | 0.790 | 0.940 | 3.500 | 4.125 | - | - |
| 1 1/8 | 1 3/16 | 1.724 | 1.813 | 0.023 | 0.023 | 0.860 | 0.890 | 3.875 | 3.875 | - | - |
| 1 1/8 | 1 5/16 | 1.724 | 2.063 | 0.023 | 0.027 | 0.860 | 0.940 | 3.875 | 4.250 | - | - |
| 1 1/8 | 1 3/8 | 1.724 | 2.113 | 0.023 | 0.027 | 0.860 | 0.940 | - | - | 2.438 | 2.536 |
| 1 3/16 | 1 5/16 | 1.813 | 2.063 | 0.023 | 0.027 | 0.890 | 0.940 | 3.875 | 4.250 | - | - |
| 1 1/4 | 1 5/16 | 1.906 | 2.063 | 0.023 | 0.027 | 0.940 | 0.940 | 4.125 | 4.250 | - | - |
| 1 1/4 | 1 3/8 | 1.906 | 2.113 | 0.023 | 0.027 | 0.940 | 0.940 | - | - | - | - |
| 1 1/4 | 1 7/16 | 1.906 | 2.227 | 0.027 | 0.027 | 0.940 | 0.953 | - | - | 2.563 | 2.813 |
| 1 5/16 | 1 1/2 | 2.063 | 2.395 | 0.027 | 0.027 | 0.940 | 1.008 | - | - | 2.563 | 2.813 |
| 1 3/8 | 1 7/16 | 2.113 | 2.227 | 0.027 | 0.027 | 0.940 | 0.953 | 4.250 | 4.375 | - | - |
| 1 3/8 | 1 1/2 | 2.113 | 2.395 | 0.027 | 0.027 | 0.940 | 1.008 | - | - | 2.563 | 2.813 |
| 1 7/16 | 1 1/2 | 2.227 | 2.395 | 0.027 | 0.027 | 0.953 | 1.008 | - | - | 2.813 | 2.813 |
| 1 7/16 | 1 5/8 | 2.227 | 2.641 | 0.027 | 0.031 | 0.953 | 1.063 | - | - | 2.813 | 2.813 |
| 1 1/2 | 1 5/8 | 2.395 | 2.641 | 0.027 | 0.031 | 1.008 | 1.063 | 4.375 | 4.500 | - | - |
| 1 1/2 | 1 11/16 | 2.395 | 2.790 | 0.027 | 0.031 | 1.008 | 1.063 | - | - | 2.813 | 2.813 |



Copyright ASME International
Provided by IHS under license with ASME
No reproduction or networking permitted without license from IHS

Not for Resale

## TABLE 1 TYPE I, II AND III BOX WRENCH (CUSTOMARY UNITS) (CONT'D)

| Height From Opening to Point Where Offset Blends With Handle E and F | | | | Overall Length | | | | | | Proof Torque Box Head | |
|---|---|---|---|---|---|---|---|---|---|---|---|
| Type II | | Type III | | Type I | | Type II | | Type III | | | |
| Small Head, *A* Min., in. | Large Head, *B* Min., in. | Small Head, *A* Min., in. | Large Head, *B* Min., in. | Class 1 *L*, Min., in. | Class 2 *L*, Max., in. | Class 1 *L*, Min., in. | Class 2 *L*, Max., in. | Class 1 *L*, Min., in. | Class 2 *L*, Max., in. | Small Head *A*, Min., lbf-in. | Large Head *B*, Min., lbf-in. |
| 0.156 | 0.188 | 0.188 | 0.250 | - | - | - | 3.000 | - | 3.000 | 150 | 165 |
| - | - | 0.188 | 0.281 | - | - | - | - | - | 4.000 | 150 | 165 |
| 0.188 | 0.219 | 0.281 | 0.281 | - | - | - | 3.250 | - | 3.250 | 165 | 184 |
| 0.188 | 0.219 | 0.281 | 0.219 | 4.500 | - | - | - | - | - | 165 | 220 |
| 0.219 | 0.219 | 0.219 | 0.281 | - | - | - | 3.475 | - | 4.375 | 220 | 248 |
| 0.219 | 0.275 | 0.219 | 0.297 | 5.000 | 5.000 | - | 4.750 | 6.375 | 5.000 | 220 | 275 |
| 0.275 | 0.281 | 0.297 | 0.344 | - | - | - | 4.750 | - | 5.000 | 275 | 275 |
| 0.275 | 0.287 | 0.297 | 0.500 | 6.000 | 5.000 | - | 5.000 | - | 5.000 | 275 | 605 |
| 0.287 | 0.295 | 0.500 | 0.500 | 6.500 | 5.125 | 7.375 | 5.250 | 6.813 | 5.500 | 605 | 715 |
| 0.295 | 0.297 | 0.500 | 0.500 | 7.500 | 5.500 | 7.750 | 5.750 | 7.750 | 5.750 | 715 | 1020 |
| - | - | 0.500 | 0.500 | - | - | - | - | 7.750 | - | 715 | 1500 |
| 0.297 | 0.375 | 0.500 | 0.500 | 7.500 | 5.625 | 8.500 | 6.000 | 7.969 | 6.250 | 1020 | 1500 |
| 0.375 | 0.452 | 0.500 | 0.625 | 8.250 | 6.000 | 8.750 | 6.250 | 8.500 | 6.375 | 1500 | 2200 |
| - | - | - | - | 9.375 | - | - | - | - | - | 1850 | 3080 |
| 0.452 | 0.461 | 0.625 | 0.719 | 9.375 | 6.250 | 9.625 | 6.500 | 9.250 | 6.781 | 2200 | 2640 |
| 0.452 | 0.500 | 0.625 | 0.750 | 9.375 | 6.750 | 9.750 | 6.750 | 9.750 | 6.800 | 2200 | 2860 |
| 0.461 | 0.500 | 0.719 | 0.750 | 9.438 | - | 10.000 | - | 9.750 | - | 2640 | 2860 |
| - | - | 0.719 | 0.750 | 9.438 | - | - | - | 10.000 | 7.250 | 2640 | 3300 |
| 0.500 | 0.625 | - | - | - | - | 11.000 | - | - | - | 2860 | 3300 |
| 0.500 | 0.625 | 0.750 | 0.750 | 10.875 | - | 11.250 | - | 11.250 | - | 2860 | 3630 |
| 0.625 | 0.625 | 0.750 | 0.750 | 11.750 | - | 11.500 | - | 11.375 | - | 3300 | 3630 |
| - | - | 0.750 | 0.750 | - | - | - | - | 11.375 | - | 3300 | 4510 |
| 0.625 | 0.688 | 0.750 | 0.750 | - | - | 12.000 | - | 12.000 | - | 3630 | 4510 |
| 0.688 | 0.750 | 0.750 | 1.000 | 13.188 | - | 13.000 | - | 13.500 | - | 4510 | 5390 |
| - | - | - | - | 13.750 | - | - | - | - | - | 4510 | 5940 |
| 0.750 | 0.766 | - | - | - | - | 13.875 | - | - | - | 5390 | 5940 |
| 0.766 | 0.797 | 1.000 | 1.000 | 15.063 | - | 14.500 | - | 15.813 | - | 5940 | 6430 |
| 0.766 | 0.875 | - | - | 15.875 | - | 14.625 | - | - | - | 5940 | 7920 |
| 0.797 | 0.797 | - | - | - | - | 14.750 | - | - | - | 6430 | 7200 |
| 0.797 | 0.875 | - | - | 17.000 | - | 15.500 | - | - | - | 6430 | 8400 |
| - | - | 1.000 | 1.000 | - | - | - | - | 16.000 | - | 6430 | 8970 |
| 0.797 | 0.875 | - | - | - | - | 16.000 | - | - | - | 7200 | 8400 |
| 0.875 | 0.875 | - | - | 17.375 | - | 16.000 | - | - | - | 7920 | 8400 |
| - | - | - | - | 18.250 | - | - | - | - | - | 7920 | 8970 |
| - | - | 1.000 | 1.000 | 19.000 | - | - | - | 18.000 | - | 7920 | 9240 |
| - | - | 1.000 | 1.188 | - | - | - | - | 19.500 | - | 8400 | 10365 |
| 1.125 | 1.175 | - | - | - | - | 17.500 | - | - | - | 8970 | 9240 |
| - | - | 1.000 | 1.188 | - | - | - | - | 19.500 | - | 8970 | 10365 |
| - | - | 1.000 | 1.188 | 21.000 | - | - | - | 20.000 | - | 9240 | 10365 |
| - | - | 1.000 | 1.313 | 22.000 | - | - | - | 21.500 | - | 9240 | 12800 |
| 1.225 | 1.325 | - | - | - | - | 18.500 | - | - | - | 10365 | 12800 |
| - | - | 1.188 | 1.313 | - | - | - | - | 21.000 | - | 10365 | 13570 |



Copyright ASME International
Provided by IHS under license with ASME
No reproduction or networking permitted without license from IHS

Not for Resale

## TABLE 2 TYPE I, II, AND III BOX WRENCH (SI UNITS)

| Nominal Wrench Opening Across Flats | | Outside Diameter of Box Head *OD* | | Permitted Eccentricity of Box Head Opening to Outside Diameter | | Thickness of Box Head, *T* | | Center Line of Opening to Point Where Offset Blends With Handle C and D | | | |
|---|---|---|---|---|---|---|---|---|---|---|---|
| | | | | | | | | Type II | | Type III | |
| Small Head, *A*, mm | Large Head, *B*, mm | Small Head, *A* Max., mm | Large Head, *B* Max., mm | Small Head, *A* Max., mm | Large Head, *B* Max., mm | Small Head, *A* Max., mm | Large Head, *B* Max., mm | Small Head, *A* Max., mm | Large Head, *B* Max., mm | Small Head, *A* Max., mm | Large Head, *B* Max., mm |
| 6 | 7 | 12.7 | 14.3 | 0.38 | 0.38 | 7.4 | 7.7 | 16.3 | 20.0 | 20.3 | 21.6 |
| 6 | 8 | 12.7 | 15.0 | 0.38 | 0.38 | 7.4 | 8.2 | - | - | - | - |
| 7 | 8 | 14.3 | 15.0 | 0.38 | 0.38 | 7.7 | 8.2 | 20.0 | 25.0 | - | - |
| 7 | 9 | 14.3 | 17.4 | 0.38 | 0.38 | 7.7 | 9.0 | 20.0 | 30.0 | - | - |
| 8 | 9 | 15.0 | 17.4 | 0.38 | 0.38 | 8.2 | 9.0 | 25.0 | 30.0 | 21.6 | 22.9 |
| 8 | 10 | 15.0 | 18.8 | 0.38 | 0.38 | 8.2 | 9.0 | 25.0 | 31.8 | - | - |
| 9 | 10 | 17.4 | 18.8 | 0.38 | 0.38 | 9.0 | 9.0 | 30.0 | 31.8 | 22.9 | 24.1 |
| 9 | 11 | 17.4 | 19.9 | 0.38 | 0.38 | 9.0 | 10.0 | 30.0 | 35.3 | 22.9 | 29.6 |
| 10 | 11 | 18.8 | 19.9 | 0.38 | 0.38 | 9.0 | 10.0 | 31.8 | 35.3 | 24.1 | 29.6 |
| 10 | 12 | 18.8 | 21.4 | 0.38 | 0.46 | 9.0 | 10.0 | 31.8 | 35.6 | - | - |
| 10 | 13 | 18.8 | 23.1 | 0.38 | 0.46 | 9.0 | 10.5 | 31.8 | 41.3 | - | - |
| 11 | 12 | 19.9 | 21.4 | 0.38 | 0.46 | 10.0 | 10.0 | 35.3 | 35.6 | 29.6 | 30.0 |
| 11 | 13 | 19.9 | 23.1 | 0.38 | 0.46 | 10.0 | 10.5 | 35.3 | 41.3 | - | - |
| 12 | 13 | 21.4 | 23.1 | 0.46 | 0.46 | 10.0 | 10.5 | 35.6 | 41.3 | 30.0 | 30.6 |
| 12 | 14 | 21.4 | 24.4 | 0.46 | 0.46 | 10.0 | 11.5 | 35.6 | 41.6 | 30.0 | 30.6 |
| 13 | 14 | 23.1 | 24.4 | 0.46 | 0.46 | 10.5 | 11.5 | 41.3 | 41.6 | 30.6 | 30.6 |
| 13 | 15 | 23.1 | 26.0 | 0.46 | 0.46 | 10.5 | 11.5 | 41.3 | 42.2 | 30.6 | 33.5 |
| 14 | 15 | 24.4 | 26.0 | 0.46 | 0.46 | 11.5 | 11.5 | 41.6 | 42.2 | 30.6 | 33.5 |
| 15 | 16 | 26.0 | 27.0 | 0.46 | 0.46 | 11.5 | 12.1 | - | - | 33.5 | 34.0 |
| 15 | 17 | 26.0 | 29.3 | 0.46 | 0.46 | 11.5 | 12.7 | 42.2 | 54.0 | 33.5 | 35.8 |
| 15 | 18 | 26.0 | 29.3 | 0.46 | 0.46 | 11.5 | 12.7 | 42.2 | 56.9 | - | - |
| 16 | 17 | 27.0 | 29.3 | 0.46 | 0.46 | 12.1 | 12.7 | 52.1 | 54.0 | 34.0 | 35.8 |
| 16 | 18 | 27.0 | 29.3 | 0.46 | 0.46 | 12.1 | 12.7 | 52.1 | 56.9 | 34.0 | 37.0 |
| 16 | 19 | 27.0 | 31.2 | 0.46 | 0.46 | 12.1 | 14.8 | - | - | - | - |
| 17 | 19 | 29.3 | 31.2 | 0.46 | 0.46 | 12.7 | 14.8 | 54.0 | 57.8 | 35.8 | 41.7 |
| 18 | 19 | 29.3 | 31.2 | 0.46 | 0.46 | 12.7 | 14.8 | 56.9 | 57.8 | 37.0 | 41.7 |
| 18 | 20 | 29.3 | 32.9 | 0.46 | 0.51 | 12.7 | 14.8 | - | - | 37.0 | 42.5 |
| 18 | 21 | 29.3 | 33.8 | 0.46 | 0.51 | 12.7 | 16.3 | 56.9 | 63.5 | - | - |
| 19 | 20 | 31.2 | 32.9 | 0.46 | 0.51 | 14.8 | 14.8 | 57.8 | 63.2 | 41.7 | 42.5 |
| 19 | 21 | 31.2 | 33.8 | 0.46 | 0.51 | 14.8 | 16.3 | - | - | 41.7 | 44.2 |
| 19 | 22 | 31.2 | 35.6 | 0.46 | 0.51 | 14.8 | 16.3 | 57.8 | 66.0 | - | - |
| 20 | 22 | 32.9 | 35.6 | 0.51 | 0.51 | 14.8 | 16.3 | 63.2 | 66.0 | 42.5 | 45.7 |
| 21 | 22 | 33.8 | 35.6 | 0.51 | 0.51 | 16.3 | 16.3 | 63.5 | 66.0 | - | - |
| 21 | 23 | 33.8 | 37.3 | 0.51 | 0.51 | 16.3 | 16.5 | 63.5 | 68.6 | 44.2 | 45.7 |
| 21 | 24 | 33.8 | 38.1 | 0.51 | 0.51 | 16.3 | 17.8 | 63.5 | 71.6 | - | - |
| 22 | 23 | 35.6 | 37.3 | 0.51 | 0.51 | 16.3 | 16.5 | - | - | 45.7 | 45.7 |
| 22 | 24 | 35.6 | 38.1 | 0.51 | 0.51 | 16.3 | 17.8 | 66.0 | 71.6 | 45.7 | 50.0 |
| 23 | 24 | 37.3 | 38.1 | 0.51 | 0.51 | 16.5 | 17.8 | 68.6 | 71.6 | - | - |
| 24 | 26 | 38.1 | 42.2 | 0.51 | 0.58 | 17.8 | 18.0 | 71.6 | 75.7 | 50.0 | 56.0 |
| 24 | 27 | 38.1 | 44.2 | 0.51 | 0.58 | 17.8 | 19.8 | 71.6 | 88.9 | - | - |
| 25 | 28 | 40.2 | 45.3 | 0.51 | 0.58 | 17.9 | 19.8 | 71.8 | 89.8 | 52.8 | 61.9 |
| 26 | 29 | 42.2 | 45.3 | 0.58 | 0.58 | 18.0 | 19.8 | 75.7 | 93.7 | 56.0 | 61.9 |
| 27 | 30 | 44.2 | 47.5 | 0.58 | 0.58 | 19.8 | 20.0 | 88.9 | 94.5 | - | - |
| 27 | 32 | 44.2 | 49.8 | 0.58 | 0.58 | 19.8 | 22.0 | 88.9 | 96.8 | 61.9 | 63.9 |
| 28 | 32 | 45.3 | 49.8 | 0.58 | 0.58 | 19.8 | 22.0 | - | - | - | - |
| 30 | 32 | 47.5 | 49.8 | 0.58 | 0.58 | 20.0 | 22.0 | 94.5 | 96.8 | - | - |



Copyright ASME International
Provided by IHS under license with ASME
No reproduction or networking permitted without license from IHS

Not for Resale

## TABLE 2 TYPE I, II AND III BOX WRENCH (SI UNITS) (CONT'D)

| Height From Opening to Point Where Offset Blends With Handle E and F | | | | Overall Length | | | | | Proof Torque Box Head | |
|---|---|---|---|---|---|---|---|---|---|---|
| Type II | | Type III | | Type I | Type II | | Type III | | | |
| Small Head, *A* Min., mm | Large Head, *B* Min., mm | Small Head, *A* Min., mm | Large Head, *B* Min., mm | Class 1 *L* Min., mm | Class 1 *L* Min., mm | Class 2 *L* Max., mm | Class 1 *L* Min., mm | Class 2 *L* Max., mm | Small Head *A* Min., *N-m* | Small Head *B* Min., *N-m* |
| 4.5 | 5.0 | 5.0 | 5.1 | - | 85 | 100 | 144 | 114 | 20 | 27 |
| - | - | - | - | 173 | - | - | - | - | 20 | 30 |
| 5.0 | 6.0 | - | - | - | 150 | - | - | - | 27 | 30 |
| 5.0 | 7.1 | - | - | 175 | - | - | - | - | 27 | 40 |
| 6.0 | 7.1 | 5.1 | 7.0 | 176 | 155 | 110 | 158 | 121 | 30 | 40 |
| 6.0 | 7.3 | - | - | 180 | 182 | - | - | - | 30 | 71 |
| 7.1 | 7.3 | 7.0 | 7.6 | - | - | 120 | - | 127 | 40 | 71 |
| 7.1 | 7.3 | 7.0 | 8.5 | - | 182 | - | 170 | - | 40 | 80 |
| 7.3 | 7.3 | 7.6 | 8.5 | 191 | 182 | 125 | 177 | 133 | 71 | 80 |
| 7.3 | 7.5 | - | - | - | 188 | - | - | - | 71 | 91 |
| 7.3 | 7.5 | - | - | - | 188 | - | - | - | 71 | 115 |
| 7.3 | 7.5 | 8.5 | 9.5 | - | - | 130 | - | 133 | 80 | 91 |
| 7.3 | 7.5 | - | - | - | 197 | - | - | - | 80 | 115 |
| 7.5 | 7.5 | 9.5 | 10.0 | 210 | 207 | 145 | 203 | 145 | 91 | 115 |
| 7.5 | 9.5 | 9.5 | 10.2 | 217 | 213 | - | 208 | - | 91 | 158 |
| 7.5 | 9.5 | 10.0 | 10.2 | - | 216 | - | 219 | 150 | 115 | 158 |
| 7.5 | 11.0 | 10.0 | 10.8 | 220 | 220 | - | 225 | - | 115 | 200 |
| 9.5 | 11.0 | 10.2 | 10.8 | 223 | 225 | 160 | 230 | 160 | 158 | 200 |
| - | - | 10.8 | 11.4 | - | - | - | - | 167 | 200 | 248 |
| 11.0 | 12.7 | 10.8 | 11.4 | - | 231 | - | 233 | 173 | 200 | 267 |
| 11.0 | 12.7 | - | - | - | 236 | - | - | - | 200 | 304 |
| 12.7 | 12.7 | 11.4 | 11.4 | 241 | 241 | - | 240 | 174 | 248 | 267 |
| 12.7 | 12.7 | 11.4 | 12.7 | 255 | 244 | - | 245 | - | 248 | 304 |
| - | - | - | - | 259 | - | - | - | - | 248 | 323 |
| 12.7 | 12.7 | 11.4 | 13.3 | 259 | 249 | - | 265 | 180 | 267 | 323 |
| 12.7 | 12.7 | 12.7 | 13.3 | - | 254 | - | 280 | 184 | 304 | 323 |
| - | - | 12.7 | 14.0 | - | - | - | - | 188 | 304 | 347 |
| 12.7 | 16.2 | - | - | - | 266 | - | - | - | 304 | 372 |
| 12.7 | 16.2 | 13.3 | 14.0 | - | 279 | - | 280 | - | 323 | 347 |
| - | - | 13.3 | 20.3 | - | - | - | 285 | - | 323 | 372 |
| 12.7 | 16.6 | - | - | 275 | 285 | - | - | - | 323 | 408 |
| 16.2 | 16.6 | 14.0 | 20.3 | 296 | 288 | - | 292 | - | 347 | 408 |
| 16.2 | 16.6 | - | - | - | 292 | - | - | - | 372 | 408 |
| 16.2 | 16.6 | 20.3 | 20.3 | 307 | 300 | - | 307 | - | 372 | 455 |
| 16.2 | 17.1 | - | - | - | 307 | - | - | - | 372 | 509 |
| - | - | 20.3 | 20.3 | - | - | - | 333 | - | 408 | 455 |
| 16.6 | 17.1 | 20.3 | 20.6 | 317 | 314 | - | 340 | - | 408 | 509 |
| 16.6 | 17.1 | - | - | - | 322 | - | - | - | 455 | 509 |
| 17.1 | 18.1 | 20.6 | 26.8 | 337 | 330 | - | 349 | - | 509 | 608 |
| 17.1 | 19.4 | - | - | - | 339 | - | - | - | 509 | 671 |
| 18.1 | 19.4 | 25.0 | 29.7 | 370 | 350 | - | 379 | - | 559 | 710 |
| 18.1 | 20.2 | 26.8 | 32.1 | - | 360 | - | 404 | - | 608 | 750 |
| 19.4 | 21.8 | - | - | 380 | 369 | - | - | - | 671 | 795 |
| 19.4 | 21.8 | 29.7 | 37.5 | - | 381 | - | 430 | - | 671 | 905 |
| - | - | - | - | 396 | - | - | - | - | 710 | 905 |
| 21.8 | 21.8 | - | - | 396 | 393 | - | - | - | 795 | 905 |



Copyright ASME International
Provided by IHS under license with ASME
No reproduction or networking permitted without license from IHS

Not for Resale

proof torque, examination for permanent deformation shall be made.

**5.2.2 Mandrels for Wrench Openings.** Suitable mandrels shall be used to fit into the wrench opening and to provide the proper support and necessary strength for the proof torque applied. The wrenches shall be tested on hexagonal mandrels. Mandrels shall conform to the dimensions and tolerances of Tables 3 and 4. Mandrels shall be hardened to show a hardness of not less than 55 HRC and smoothly finished on the wrench engaging surfaces.

**5.2.3 Application of Proof Torque.** The proof torque specified in the applicable table is the torque applied to the test mandrel which tends to rotate the mandrel about its longitudinal axis. Wrench openings shall be gaged prior to testing. The torque shall be applied to mandrels which are fully seated and extend through the wrenching surfaces. The force required to produce the torque shall be applied as far from the mandrel as practical. Box ends shall be torqued to the proof torque. Following the removal of the proof torque, they shall be regaged. Any box end which does not sustain the proof torque, cracks, fractures, slips on mandrel, or does not gage after torquing has failed the test. Wrench failure has also occurred if there is visible permanent distortion in the handle and/or permanent deformation of the box head with respect to the handle in excess of 5 deg.

### 5.3 Coating Process Qualification Test

Alternative coatings shall be subjected to testing in order to certify the manufacturer's production coating process. The Coating Process Test consists of an adhesion, abrasion and corrosion test specified in paras. 5.3.2, 5.3.3, and 5.3.4. The Coating Process Qualification Test may also be performed to certify the manufacturer's Nickel-Chromium coating process. Passing the Coating Process Qualification tests, when agreed to by the customer, exempts the manufacturer from the Nickel-Chromium thickness requirement of para. 4.7.2(a). Retesting may be required when a significant change occurs in the process, when there is a change in the materials, or when contractually required by the customer.

**5.3.1 Test Preparation.** The quantity and condition of the sample wrenches used for the following testing shall be per the manufacturer's standard practice or as mutually agreed to by the manufacturer and the customer.

**5.3.2 Coating Process Adhesion Test.** Sample wrenches shall pass the file or grind-saw test of ASTM B 571.

**5.3.3 Coating Process Abrasion Test.** Sample wrenches shall have no base material exposed when subjected to 100 L of falling sand test of ASTM D 968 Method A.

**5.3.4 Coating Process Corrosion Test.** Sample wrenches shall be tested for corrosion resistance by exposure to a 48 hr salt spray test, as specified in ASTM B 117, without falling below the ASTM B 537 rating of 6.

## 6 DESIGNATIONS

Wrenches shall be designated by the following data in the sequence shown:

*(a)* Type
*(b)* Class
*(c)* Size of openings
*(d)* Configuration of openings
*(e)* Coating

EXAMPLE: Box Wrench Type III, Class 1, $\frac{1}{2} \times \frac{9}{16}$, 12 point openings, Nickel-chrome.

## 7 SAFETY REQUIREMENTS AND LIMITATIONS OF USE

Instructors and employers shall stress proper use and safety in the use of wrenches, information about which can be found in the HTI publication, Guide to Hand Tools-Selection, Safety Tips, Proper Use and Care.



Copyright ASME International
Provided by IHS under license with ASME
No reproduction or networking permitted without license from IHS
Not for Resale

## TABLE 3 HEXAGON MANDREL DIMENSIONS (CUSTOMARY UNITS)

| Nominal Size of Wrench Opening, in. | Hexagon Mandrel Dimensions, in. | | |
|---|---|---|---|
| | Across Flats Tolerance | | Across Corners, Min., in. [Note (1)] |
| | Plus | Minus | |
| 1/8 | 0.001 | 0.002 | 0.1403 |
| 5/32 | 0.001 | 0.002 | 0.1745 |
| 13/64 | 0.001 | 0.002 | 0.2095 |
| 3/16 | 0.001 | 0.002 | 0.2268 |
| 7/32 | 0.001 | 0.002 | 0.2440 |
| 15/64 | 0.001 | 0.002 | 0.2610 |
| 1/4 | 0.001 | 0.002 | 0.2780 |
| 9/32 | 0.001 | 0.002 | 0.3133 |
| 5/16 | 0.001 | 0.002 | 0.3495 |
| 11/32 | 0.001 | 0.002 | 0.3860 |
| 3/8 | 0.001 | 0.002 | 0.4225 |
| 7/16 | 0.001 | 0.002 | 0.4935 |
| 1/2 | 0.001 | 0.003 | 0.5635 |
| 9/16 | 0.001 | 0.003 | 0.6339 |
| 5/8 | 0.001 | 0.003 | 0.7055 |
| 11/16 | 0.001 | 0.003 | 0.7769 |
| 3/4 | 0.001 | 0.003 | 0.8485 |
| 13/16 | 0.001 | 0.003 | 0.9201 |
| 7/8 | 0.001 | 0.003 | 0.9917 |
| 15/16 | 0.001 | 0.003 | 1.0631 |
| 1 | 0.001 | 0.003 | 1.1297 |
| 1 1/16 | 0.001 | 0.003 | 1.2013 |
| 1 1/8 | 0.001 | 0.003 | 1.2728 |
| 1 3/16 | 0.001 | 0.003 | 1.343 |
| 1 1/4 | 0.001 | 0.003 | 1.416 |
| 1 5/16 | 0.001 | 0.003 | 1.487 |
| 1 3/8 | 0.001 | 0.003 | 1.559 |
| 1 7/16 | 0.001 | 0.003 | 1.631 |
| 1 1/2 | 0.001 | 0.003 | 1.702 |
| 1 9/16 | 0.001 | 0.007 | 1.770 |
| 1 5/8 | 0.001 | 0.007 | 1.841 |
| 1 11/16 | 0.001 | 0.007 | 1.912 |
| 1 3/4 | 0.001 | 0.007 | 1.983 |
| 1 13/16 | 0.001 | 0.007 | 2.054 |
| 1 7/8 | 0.001 | 0.007 | 2.124 |
| 1 15/16 | 0.001 | 0.007 | 2.195 |
| 2 | 0.001 | 0.007 | 2.266 |
| 2 1/16 | 0.001 | 0.007 | 2.337 |
| 2 1/8 | 0.001 | 0.007 | 2.408 |
| 2 3/16 | 0.001 | 0.007 | 2.479 |
| 2 1/4 | 0.001 | 0.007 | 2.549 |

NOTE:
(1) For sizes not listed, multiply nominal size by 1.133055 for mandrel dimension across corners. Applicable to mandrels over 1 1/2 in. nominal size.

## TABLE 4 HEXAGON MANDREL DIMENSIONS (SI UNITS)

| Nominal Size of Wrench Opening, mm | Hexagon Mandrel Dimensions, mm | | |
|---|---|---|---|
| | Across Flats Tolerance | | Across Corners, Min., mm [Note (1)] |
| | Plus | Minus | |
| 3.2 | 0.025 | 0.050 | 3.57 |
| 4 | 0.025 | 0.050 | 4.46 |
| 5 | 0.025 | 0.050 | 5.58 |
| 5.5 | 0.025 | 0.050 | 6.13 |
| 6 | 0.025 | 0.050 | 6.68 |
| 6.3 | 0.025 | 0.050 | 7.02 |
| 7 | 0.025 | 0.050 | 7.79 |
| 8 | 0.025 | 0.050 | 8.95 |
| 9 | 0.025 | 0.050 | 10.11 |
| 10 | 0.025 | 0.050 | 11.27 |
| 11 | 0.025 | 0.050 | 12.40 |
| 12 | 0.025 | 0.076 | 13.53 |
| 13 | 0.025 | 0.076 | 14.67 |
| 14 | 0.025 | 0.076 | 15.80 |
| 15 | 0.025 | 0.076 | 16.92 |
| 16 | 0.025 | 0.076 | 18.06 |
| 17 | 0.025 | 0.076 | 19.20 |
| 18 | 0.025 | 0.076 | 20.35 |
| 19 | 0.025 | 0.076 | 21.49 |
| 20 | 0.025 | 0.076 | 22.64 |
| 21 | 0.025 | 0.076 | 23.78 |
| 22 | 0.025 | 0.076 | 24.93 |
| 23 | 0.025 | 0.076 | 26.07 |
| 24 | 0.025 | 0.076 | 27.20 |
| 25 | 0.025 | 0.076 | 28.27 |
| 26 | 0.025 | 0.076 | 29.38 |
| 27 | 0.025 | 0.076 | 30.53 |
| 28 | 0.025 | 0.076 | 31.67 |
| 29 | 0.025 | 0.076 | 32.81 |
| 30 | 0.025 | 0.076 | 33.96 |
| 31 | 0.025 | 0.076 | 35.10 |
| 32 | 0.025 | 0.076 | 36.25 |
| 33 | 0.025 | 0.076 | 37.38 |
| 34 | 0.025 | 0.076 | 38.52 |
| 35 | 0.025 | 0.076 | 39.68 |
| 36 | 0.025 | 0.076 | 40.83 |
| 38 | 0.025 | 0.076 | 43.11 |
| 40 | 0.025 | 0.177 | 45.32 |
| 41 | 0.025 | 0.177 | 46.45 |
| 42 | 0.025 | 0.177 | 47.59 |
| 46 | 0.025 | 0.177 | 52.12 |
| 50 | 0.025 | 0.177 | 56.65 |

NOTE:
(1) For sizes not listed, multiply nominal size by 1.133055 for mandrel dimension across corners. Applicable to mandrels over 38 mm nominal size.



Copyright ASME International
Provided by IHS under license with ASME
No reproduction or networking permitted without license from IHS
Not for Resale

# ASME B107.39

**1 Scope** ..... 21

**2 Classification** ..... 21

**3 Normative References** ..... 21

**4 Requirements** ..... 21
4.1 Illustrations ..... 21
4.2 Materials ..... 21
4.3 Markings ..... 21
4.4 Hardness ..... 22
4.5 Proof Torque ..... 22
4.6 Wrench Opening ..... 22
4.7 Finish ..... 22
4.8 Design ..... 22

**5 Test Procedures** ..... 23
5.1 Hardness ..... 23
5.2 Proof Torque Test ..... 23
5.3 Coating Process Qualification Test ..... 26

**6 Designations** ..... 28

**7 Safety Requirements and Limitations of Use** ..... 28

**Figures**
1 Finish Requirements ..... 22
2 Type I Engineer's Wrench ..... 23
3 Type II Class 1, Angle Wrench ..... 29
4 Type II Class 2, Angle Wrench ..... 30
5 Type III Tappet Wrench ..... 31

**Tables**
1 Type I Engineer's Wrench (Customary Units) ..... 24
2 Type I Engineer's Wrench (SI Units) ..... 25
3 Type II, Class 1 Angle Wrench, 30 deg/60 deg Head Offsets (Customary Units) ..... 26
4 Type II, Class 1 Angle Wrench, 30 deg/60 deg Head Offsets (SI Units) ..... 27
5 Type II, Class 2 Angle Wrench, 15 deg/60 deg Head Offsets (Customary Units) ..... 27
6 Type II, Class 2 Angle Wrench, 15 deg and 60 deg Head Offsets (SI Units) ..... 28
7 Type III, Class 1 Tappet Wrench, 15 deg Angle (Customary Units) ..... 31
8 Type III, Class 1 Tappet Wrench, 15 deg Angle (SI Units) ..... 32
9 Hexagon Mandrel Dimensions (Customary Units) ..... 33
10 Hexagon Mandrel Dimensions (SI Units) ..... 33



Copyright ASME International
Provided by IHS under license with ASME
No reproduction or networking permitted without license from IHS

Not for Resale

# OPEN END WRENCHES (INCH AND METRIC SERIES)

## 1 SCOPE

This Standard provides the general, dimensional, performance, and safety requirements for open end wrenches, including but not restricted to Engineer's, angled, and tappet. Inclusion of dimensional data in this Standard is not intended to imply that all of the products described herein are stock production sizes. Consumers are requested to consult with manufacturers concerning lists of stock production sizes.

## 2 CLASSIFICATION

*Open end wrench, double head*

**Type I** Engineer's wrench, 15 deg angle
*Class 1* Regular length
*Class 2* Short length
**Type II** Angle wrench
*Class 1* 30 deg and 60 deg
*Class 2* 15 deg and 60 deg
**Type III** Tappet wrench, 15 deg angle

## 3 NORMATIVE REFERENCES

The following documents form a part of this Standard to the extent specified herein. At the time of publication, the editions indicated were valid. All standards are subject to revision, and parties to agreements based on this Standard are encouraged to investigate the possibility of applying the most recent editions of the documents indicated below.

ASME B107.17M-1997 Gages, Wrench Openings, Reference

Publisher: The American Society of Mechanical Engineers (ASME International), Three Park Avenue, New York, NY 10016-5990; Order Department: 22 Law Drive, PO Box 2300, Fairfield, NJ 07007-2300

ASTM E 18-97 Standard Test Methods for Rockwell Hardness and Rockwell Superficial Hardness of Metallic Materials

ASTM B 117-97 Standard Practice for Operating Salt Spray (Fog) Apparatus

ASTM B 537-70 Standard Practice for Rating of Electroplated Panels Subjected to Atmospheric Exposure

ASTM B 571-97 Standard Test Methods for Adhesion of Metallic Materials

ASTM D 968-93 Standard Test Methods for Abrasion Resistance of Organic Coatings by Falling Abrasive

Publisher: The American Society for Testing and Materials (ASTM), 100 Barr Harbor Drive, West Conshohocken, PA 19428-2959

Guide to Hand Tools-Selection, Safety Tips, Proper Use and Care

Publisher: Hand Tools Institute (HTI), 25 North Broadway, Tarrytown, NY 10591

## 4 REQUIREMENTS

### 4.1 Illustrations

The illustrations shown herein are descriptive and not restrictive, and are not intended to preclude the manufacture of wrenches that are otherwise in accordance with this Standard.

### 4.2 Materials

The materials used in the manufacturing of the wrenches shall be such as to produce wrenches conforming to this Standard.

### 4.3 Markings

Each wrench shall be marked on one of the faces or on the handle as close to each head as is practical in a plain and permanent manner with the respective nominal wrench opening as shown in the first column of the applicable table. In addition to size markings, each wrench shall be marked in a plain and permanent manner with manufacturer's name or trademark of such known character that the source of manufacture and country of origin may be readily determined.



Copyright ASME International
Provided by IHS under license with ASME
No reproduction or networking permitted without license from IHS
Not for Resale

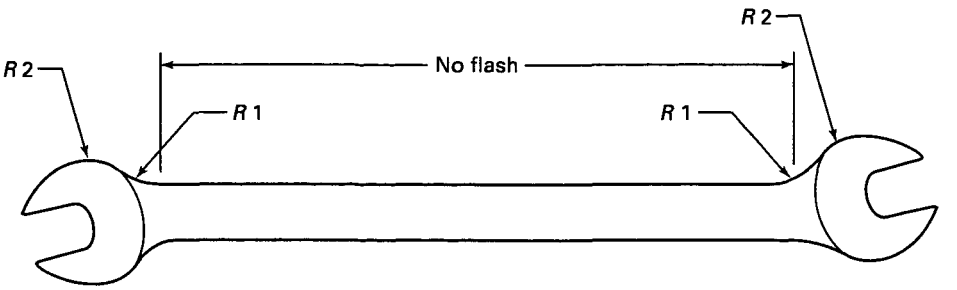


*R* 1 = Flash permissible
*R* 2 = No flash

**FIG. 1 FINISH REQUIREMENTS**

### 4.4 Hardness

Wrenches shall be heat treated to a hardness of 38 HRC to 55 HRC when tested as specified in para. 5.1.

### 4.5 Proof Torque

When tested as specified, wrenches shall withstand the proof torque specified in the applicable tables without failure or permanent deformation (set), which might affect the durability or serviceability of the wrenches. Proof torque is a predetermined test torque to which a sample is subjected before acceptance.

### 4.6 Wrench Opening

Wrench openings shall be such as to insure acceptance when gaged with gages conforming to ASME B107.17M.

### 4.7 Finish

**4.7.1 Surface Finish.** See Fig. 1. All surfaces shall be thoroughly cleaned, free from cracks, and essentially free from burrs, pits, nodules, and other detrimental conditions.

*(a) Minimum Area of Surface Finish.* Both faces of the open end shall be bright and shall have a maximum roughness height value of 30 μin. (0.76 μm) (arithmetical average using a 0.03 in. cutoff on the surface measuring instrument). Wrenches with phosphate or oxide coatings are excluded from this requirement.

*(b) Flash.* Flash shall be completely removed from the circumference of all open end wrenches, and from that portion of the handle which shall be essentially straight and uniform in sectional dimensions. Any remaining flash on any surface shall blend smoothly with adjacent surfaces; external sharp edges shall be broken to 0.016 in. (0.38 mm) radius minimum, and shall not project more than 0.016 in. (0.38 mm) from adjacent surfaces.

**4.7.2 Coatings.** The coating shall be adherent, smooth, continuous, and free from uncoated areas, pits, blisters, nodules, and any other defects, which would interfere with their protective value and serviceability. Plating contact marks should be kept to a minimum. The wrench shall be coated with one of the coatings in accordance with (a), (b), (c), or (d) below. The customer may specify the type of coating required.

*(a) Nickel-Chromium.* Wrenches shall have a protective-decorative nickel-chromium plating. The nickel thickness shall be a minimum of 0.000150 in. (0.0038 mm). The chromium thickness shall be a minimum of 0.000003 in. (0.000076 mm). A nickel-iron undercoating (16% iron max.) may be substituted for nickel.

*(b) Phosphate.* Wrenches shall have a chemically produced phosphate coating followed by a coating of rust preventative.

*(c) Oxide.* Oxide coated wrenches shall have a coating consisting of a chemically produced oxide followed by a coating of rust preventative.

*(d) Alternative Coatings.* Wrenches not falling within one of the coating types listed above shall be finished in accordance with predetermined requirements between manufacturer and customer. Alternative coatings may be used in lieu of Nickel-Chromium and shall be subjected to the Coating Process Qualification Test as specified in para. 5.3.

### 4.8 Design

Wrenches shall be suitable for use on hexagonal and square-headed bolts and nuts.

*Type 1* wrenches shall have two open ends angled from the wrench handle, shall be similar to Fig. 2, and shall conform to Tables 1 and 2 as applicable.



Copyright ASME International
Provided by IHS under license with ASME
No reproduction or networking permitted without license from IHS
Not for Resale

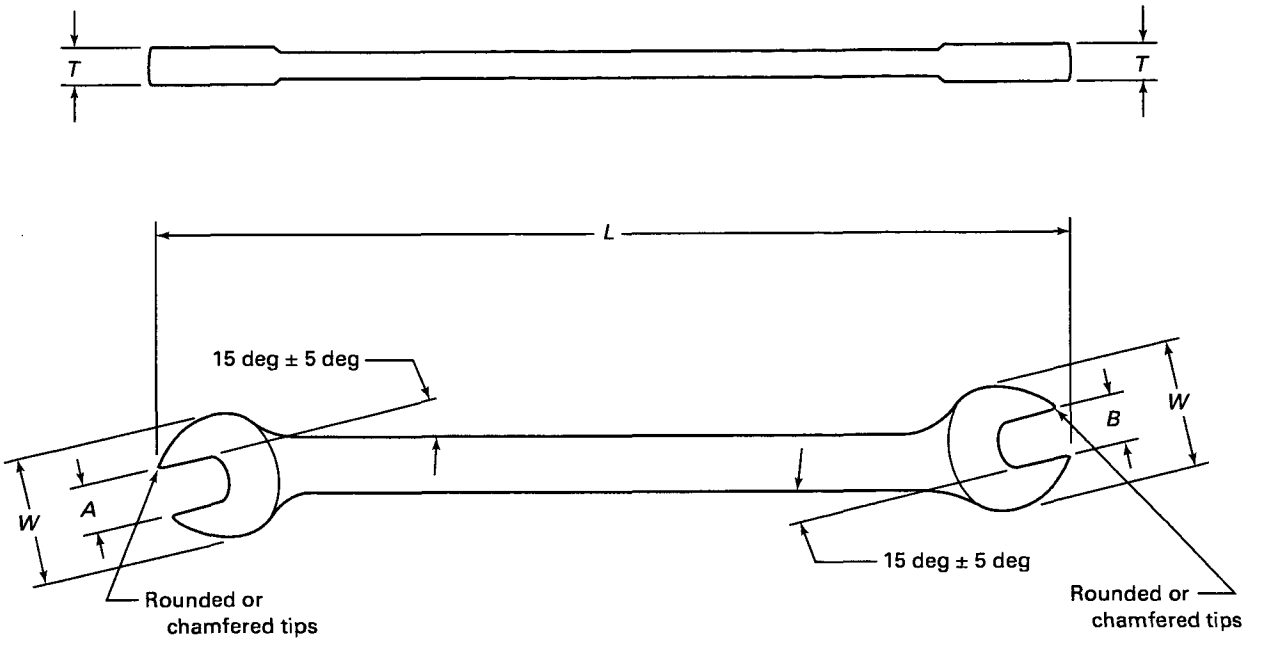


**FIG. 2 TYPE I ENGINEER'S WRENCH**

*Type II* wrenches shall have two open ends angled from the wrench handle and shall conform to Tables 3, 4, 5, and 6 as applicable. Classes 1 and 2 shall be similar to Figs. 3 and 4.

*Type III* wrenches shall have two open ends angled from the wrench handle. Wrenches shall be similar to Fig. 5 and conform to Tables 7 and 8 as applicable.

Wrenches shall be so designed as to afford a well proportioned, comfortable handgrip, and be similar to the figure to which reference is made. The engaging surfaces of the wrench openings shall be finished in a smooth and well-defined manner. The tips (working ends) of all open end wrenches shall also be chamfered or rounded to eliminate burrs (see Figs. 2 through 5).

## 5 TEST PROCEDURES

Many of the tests herein are inherently hazardous and adequate safeguards for personnel and property shall be employed in conducting these tests.

### 5.1 Hardness

Hardness shall be tested in accordance with ASTM E 18. When surface preparation is necessary, the amount of material removed shall not exceed 0.007 in. (0.18 mm) in the area contacted by the indenter.

### 5.2 Proof Torque Test

Proof Torque Test shall be conducted to determine conformance with the applicable proof torque requirements specified in para. 4.5.

**5.2.1 Wrench Preparation.** In order to prepare the wrench for test, suitable reference lines may be scribed on the heads and handle. After application of proof torque, examination for permanent deformation shall be made.

**5.2.2 Mandrels for Wrench Openings.** Suitable mandrels shall be used to fit into the wrench opening and to provide the proper support and necessary strength for the proof torque applied. The wrenches shall be tested on hexagonal mandrels. Mandrels shall conform to the dimensions and tolerances of Tables 9 and 10. Mandrels shall be hardened to show a hardness of not less than 55 HRC and smoothly finished on the wrench engaging surfaces.

**5.2.3 Application of Proof Torque.** The proof torque specified in the applicable table is the torque applied to the test mandrel which tends to rotate the mandrel about its longitudinal axis. Wrench openings shall be gaged prior to testing. The torque shall be applied to mandrels which are fully seated and extend through the wrenching surfaces. The force required to



Copyright ASME International
Provided by IHS under license with ASME
No reproduction or networking permitted without license from IHS
Not for Resale

## TABLE 1 TYPE I ENGINEER'S WRENCH (CUSTOMARY UNITS)

| Nominal Wrench Opening Across Flats | | Width of Open Head | | Thickness of Open Head | | Overall Length *L* | | Proof Torque Open Head | |
|---|---|---|---|---|---|---|---|---|---|
| Small Head, *A*, in. | Large Head, *B*, in. | Small Head, *W* Max., in. | Large Head, *W* Max., in. | Small Head, *T* Max., in. | Large Head, *T* Max., in. | Class 1 Min., in. | Class 2 Max., in. | Small Head Min., lbf-in. | Large Head Min., lbf-in. |
| 3/16 | 7/32 | 0.500 | 0.563 | 0.172 | 0.172 | 2.625 | 2.875 | 45 | 50 |
| 3/16 | 1/4 | 0.500 | 0.654 | 0.172 | 0.205 | 3.000 | 3.000 | 45 | 67 |
| 1/4 | 9/32 | 0.654 | 0.688 | 0.205 | 0.215 | - | 3.375 | 67 | 78 |
| 1/4 | 5/16 | 0.654 | 0.811 | 0.205 | 0.223 | 3.000 | 3.250 | 67 | 138 |
| 5/16 | 11/32 | 0.811 | 0.813 | 0.223 | 0.237 | 3.625 | 3.625 | 138 | 193 |
| 5/16 | 3/8 | 0.811 | 0.906 | 0.223 | 0.250 | 3.625 | 3.625 | 138 | 275 |
| 5/16 | 7/16 | 0.811 | 0.996 | 0.223 | 0.281 | 3.625 | - | 138 | 413 |
| 3/8 | 7/16 | 0.906 | 0.996 | 0.250 | 0.281 | 4.375 | 4.375 | 275 | 413 |
| 3/8 | 1/2 | 0.906 | 1.142 | 0.250 | 0.344 | 4.250 | 4.250 | 275 | 550 |
| 13/32 | 1/2 | 0.949 | 1.142 | 0.266 | 0.344 | 4.250 | 4.625 | 344 | 550 |
| 7/16 | 1/2 | 0.996 | 1.142 | 0.281 | 0.344 | 5.000 | 5.000 | 413 | 550 |
| 1/2 | 9/16 | 1.142 | 1.272 | 0.344 | 0.375 | 5.500 | 5.750 | 550 | 770 |
| 9/16 | 5/8 | 1.272 | 1.402 | 0.375 | 0.380 | 6.000 | 6.000 | 770 | 1100 |
| 5/8 | 11/16 | 1.402 | 1.536 | 0.380 | 0.400 | 7.000 | 7.250 | 1100 | 1375 |
| 5/8 | 3/4 | 1.402 | 1.672 | 0.380 | 0.406 | 7.000 | 7.250 | 1100 | 1650 |
| 11/16 | 3/4 | 1.536 | 1.672 | 0.400 | 0.406 | 7.000 | - | 1375 | 1650 |
| 11/16 | 13/16 | 1.536 | 1.828 | 0.400 | 0.516 | 7.500 | - | 1375 | 2200 |
| 3/4 | 13/16 | 1.672 | 1.828 | 0.406 | 0.516 | 8.000 | 8.000 | 1650 | 2200 |
| 3/4 | 7/8 | 1.672 | 1.959 | 0.406 | 0.516 | 8.000 | 8.250 | 1650 | 2475 |
| 13/16 | 7/8 | 1.828 | 1.959 | 0.516 | 0.516 | 8.250 | 8.500 | 2200 | 2475 |
| 13/16 | 15/16 | 1.828 | 2.078 | 0.516 | 0.594 | 9.000 | 9.000 | 2200 | 3025 |
| 7/8 | 15/16 | 1.959 | 2.078 | 0.516 | 0.594 | 9.000 | 9.125 | 2475 | 3025 |
| 7/8 | 1 | 1.959 | 2.250 | 0.516 | 0.625 | 9.000 | 10.000 | 2475 | 3575 |
| 7/8 | 1 1/16 | 1.959 | 2.344 | 0.516 | 0.625 | 9.750 | 10.000 | 2475 | 3850 |
| 15/16 | 1 | 2.078 | 2.250 | 0.594 | 0.625 | 9.875 | 10.000 | 3025 | 3575 |
| 15/16 | 1 1/16 | 2.078 | 2.344 | 0.594 | 0.625 | 10.000 | 10.000 | 3025 | 3850 |
| 1 | 1 1/16 | 2.250 | 2.344 | 0.625 | 0.625 | 10.250 | 10.500 | 3575 | 3850 |
| 1 | 1 1/8 | 2.250 | 2.500 | 0.625 | 0.656 | 10.250 | 10.750 | 3575 | 4400 |
| 1 | 1 1/2 | 2.250 | 3.375 | 0.625 | 0.813 | 11.000 | 11.000 | 3575 | 8500 |
| 1 1/16 | 1 1/8 | 2.344 | 2.500 | 0.625 | 0.656 | 11.750 | 11.750 | 3850 | 4400 |
| 1 1/16 | 1 1/4 | 2.344 | 2.766 | 0.625 | 0.719 | 11.750 | 11.750 | 3850 | 5775 |
| 1 1/8 | 1 1/4 | 2.500 | 2.766 | 0.656 | 0.719 | 11.750 | 12.000 | 4400 | 5775 |
| 1 1/8 | 1 5/16 | 2.500 | 2.938 | 0.656 | 0.719 | 12.000 | 12.500 | 4400 | 6600 |
| 1 1/8 | 1 3/8 | 2.500 | 3.063 | 0.656 | 0.750 | 13.000 | - | 4400 | 7425 |
| 1 3/16 | 1 5/16 | 2.630 | 2.938 | 0.688 | 0.719 | 13.000 | 13.000 | 5200 | 6600 |
| 1 1/4 | 1 5/16 | 2.766 | 2.938 | 0.719 | 0.719 | 13.500 | 13.500 | 5775 | 6600 |
| 1 1/4 | 1 3/8 | 2.766 | 3.063 | 0.719 | 0.750 | 13.500 | 13.500 | 5775 | 7425 |
| 1 1/4 | 1 7/16 | 2.766 | 3.188 | 0.719 | 0.813 | 13.500 | 13.500 | 5775 | 8250 |
| 1 3/8 | 1 7/16 | 3.063 | 3.188 | 0.750 | 0.813 | 14.000 | 14.000 | 7425 | 8250 |
| 1 3/8 | 1 1/2 | 3.063 | 3.375 | 0.750 | 0.813 | 14.500 | 15.500 | 7425 | 8500 |
| 1 7/16 | 1 5/8 | 3.188 | 3.625 | 0.813 | 0.813 | 14.750 | 15.500 | 8250 | 9000 |
| 1 7/16 | 1 13/16 | 3.188 | 4.188 | 0.813 | 0.875 | 15.250 | - | 8250 | 11750 |
| 1 1/2 | 1 5/8 | 3.375 | 3.625 | 0.813 | 0.813 | 15.250 | 15.500 | 8500 | 9000 |



Copyright ASME International
Provided by IHS under license with ASME
No reproduction or networking permitted without license from IHS

Not for Resale

## TABLE 2 TYPE I ENGINEER'S WRENCH (SI UNITS)

| Nominal Wrench Opening Across Flats | | Width of Open Head | | Thickness of Open Head | | Overall Length | Proof Torque Open Head | |
|---|---|---|---|---|---|---|---|---|
| Small Head, *A*, mm | Large Head, *B*, mm | Small Head, *W* Max., mm | Large Head, *W* Max., mm | Small Head, *T* Max., mm | Large Head, *T* Max., mm | *L* Class 1 Min., mm | Small Head Min., N·m | Large Head Min., N·m |
| 6 | 7 | 17.3 | 18.3 | 5.8 | 6.3 | 90 | 7 | 8 |
| 6 | 8 | 17.3 | 21.4 | 5.8 | 6.3 | 95 | 7 | 15 |
| 7 | 8 | 18.3 | 21.4 | 6.3 | 6.3 | 95 | 8 | 15 |
| 7 | 9 | 18.3 | 21.8 | 6.3 | 6.6 | 95 | 8 | 21 |
| 8 | 9 | 21.4 | 21.8 | 6.3 | 6.6 | 100 | 15 | 21 |
| 8 | 10 | 21.4 | 26.0 | 6.3 | 6.9 | 100 | 15 | 31 |
| 9 | 10 | 21.8 | 26.0 | 6.6 | 6.9 | 105 | 21 | 31 |
| 9 | 11 | 21.8 | 26.0 | 6.6 | 7.0 | 110 | 21 | 46 |
| 10 | 11 | 26.0 | 26.0 | 6.9 | 7.0 | 110 | 31 | 46 |
| 11 | 13 | 26.0 | 30.2 | 7.0 | 8.9 | 130 | 46 | 62 |
| 12 | 13 | 27.7 | 30.2 | 8.0 | 8.9 | 140 | 49 | 62 |
| 12 | 14 | 27.7 | 32.8 | 8.0 | 8.9 | 145 | 49 | 86 |
| 13 | 15 | 30.2 | 34.8 | 8.9 | 8.9 | 150 | 62 | 104 |
| 14 | 15 | 32.8 | 34.8 | 8.9 | 8.9 | 155 | 86 | 104 |
| 14 | 16 | 32.8 | 36.4 | 8.9 | 9.4 | 155 | 86 | 124 |
| 15 | 17 | 34.8 | 39.7 | 8.9 | 9.8 | 160 | 104 | 139 |
| 15 | 18 | 34.8 | 41.3 | 8.9 | 10.0 | 160 | 104 | 155 |
| 16 | 17 | 36.4 | 39.7 | 9.4 | 9.8 | 165 | 124 | 139 |
| 16 | 18 | 36.4 | 41.3 | 9.4 | 10.0 | 165 | 124 | 155 |
| 17 | 19 | 39.7 | 42.7 | 9.8 | 10.1 | 180 | 139 | 186 |
| 18 | 19 | 41.3 | 42.7 | 10.0 | 10.1 | 185 | 155 | 186 |
| 18 | 21 | 41.3 | 47.6 | 10.0 | 11.7 | 190 | 155 | 248 |
| 19 | 22 | 42.7 | 48.3 | 10.1 | 12.0 | 195 | 186 | 279 |
| 20 | 21 | 46.4 | 47.6 | 11.4 | 11.7 | 200 | 217 | 248 |
| 20 | 22 | 46.4 | 48.3 | 11.4 | 12.0 | 200 | 217 | 279 |
| 21 | 22 | 47.6 | 48.3 | 11.7 | 12.0 | 215 | 248 | 279 |
| 21 | 23 | 47.6 | 52.4 | 11.7 | 12.4 | 220 | 248 | 310 |
| 21 | 24 | 47.6 | 53.5 | 11.7 | 12.5 | 230 | 248 | 341 |
| 22 | 24 | 48.3 | 53.5 | 12.0 | 12.5 | 240 | 279 | 341 |
| 24 | 26 | 53.5 | 57.2 | 12.5 | 12.8 | 245 | 341 | 403 |
| 24 | 27 | 53.5 | 60.2 | 12.5 | 14.7 | 250 | 341 | 432 |
| 25 | 27 | 55.7 | 60.2 | 12.7 | 14.7 | 270 | 372 | 432 |
| 25 | 28 | 55.7 | 62.3 | 12.7 | 14.9 | 280 | 372 | 497 |
| 27 | 29 | 60.2 | 65.5 | 14.7 | 14.9 | 305 | 432 | 514 |
| 27 | 30 | 60.2 | 67.0 | 14.7 | 14.9 | 305 | 432 | 570 |
| 27 | 32 | 60.2 | 71.0 | 14.7 | 15.7 | 310 | 432 | 650 |
| 28 | 30 | 62.3 | 67.0 | 14.9 | 14.9 | 315 | 497 | 570 |
| 30 | 32 | 67.0 | 71.0 | 14.9 | 15.7 | 330 | 570 | 650 |
| 32 | 36 | 71.0 | 76.8 | 15.7 | 19.0 | 395 | 650 | 894 |
| 36 | 41 | 76.8 | 88.9 | 19.0 | 19.3 | 425 | 894 | 1154 |



Copyright ASME International
Provided by IHS under license with ASME
No reproduction or networking permitted without license from IHS
Not for Resale

**TABLE 3 TYPE II, CLASS 1 ANGLE WRENCH, 30 deg / 60 deg HEAD OFFSETS (CUSTOMARY UNITS)**

| Nominal Wrench Opening Across Flats, *A* or *B*, in. | Width of Open Head *W* Max., in. | Thickness of Open Head, *T* Max., in | Overall Length, *L* Class 1 Max., in. | Proof Torque Open Head Min., lbf-in. |
|---|---|---|---|---|
| 1/4 | 0.654 | 0.205 | 4.000 | 67 |
| 5/16 | 0.811 | 0.223 | 4.500 | 138 |
| 11/32 | 0.813 | 0.237 | 4.750 | 193 |
| 3/8 | 0.906 | 0.250 | 6.050 | 275 |
| 7/16 | 0.996 | 0.281 | 6.330 | 413 |
| 1/2 | 1.142 | 0.344 | 6.700 | 550 |
| 9/16 | 1.272 | 0.375 | 7.060 | 770 |
| 5/8 | 1.402 | 0.380 | 7.500 | 1100 |
| 11/16 | 1.536 | 0.400 | 8.000 | 1375 |
| 3/4 | 1.672 | 0.406 | 8.510 | 1650 |
| 13/16 | 1.828 | 0.516 | 9.080 | 2200 |
| 7/8 | 1.959 | 0.516 | 9.700 | 2475 |
| 15/16 | 2.078 | 0.594 | 10.400 | 3025 |
| 1 | 2.250 | 0.625 | 11.050 | 3575 |
| 1 1/16 | 2.344 | 0.625 | 11.219 | 3850 |
| 1 1/8 | 2.500 | 0.656 | 11.813 | 4400 |
| 1 3/16 | 2.630 | 0.688 | 12.375 | 5200 |
| 1 1/4 | 2.766 | 0.719 | 12.938 | 5775 |
| 1 5/16 | 2.938 | 0.719 | 13.500 | 6600 |
| 1 3/8 | 3.063 | 0.750 | 14.125 | 7425 |
| 1 7/16 | 3.188 | 0.813 | 14.750 | 8250 |
| 1 1/2 | 3.375 | 0.813 | 15.250 | 8500 |
| 1 5/8 | 3.625 | 0.813 | 16.438 | 9000 |
| 1 11/16 | 3.750 | 0.813 | 17.000 | 10500 |
| 1 3/4 | 4.000 | 0.875 | 17.625 | 11100 |
| 1 13/16 | 4.188 | 0.875 | 19.000 | 11750 |
| 1 7/8 | 4.344 | 0.938 | 20.500 | 12400 |
| 2 | 4.469 | 0.938 | 22.000 | 13650 |

produce the torque shall be applied as far from the mandrel as practical. Open ends shall be torqued to the proof torque. Following the removal of the proof test torque they shall be regaged. Open ends which do not sustain the test torque, crack, fracture, slip on the mandrel or exhibit visible handle distortion have failed the test. Wrench failure has also occurred if the open end jaws spread in excess of the "NO GO" gage as specified by ASME B107.17M size by more than the following:

*(a)* 0.002 (0.05 mm) for wrench opening sizes 5/32 in. (4 mm) through 1 in. (25 mm)

*(b)* 0.003 (0.08 mm) for wrench opening sizes 1 1/16 in. (26 mm) through 2 1/4 in. (50 mm)

## 5.3 Coating Process Qualification Test

Alternative coatings shall be subjected to testing in order to certify the manufacturer's production coating process. The Coating Process Test consists of an adhesion, abrasion and corrosion test specified in paras. 5.3.2, 5.3.3, and 5.3.4. The Coating Process Qualification Test may also be performed to certify the manufacturer's Nickel-Chromium coating process. Passing the Coating



Copyright ASME International
Provided by IHS under license with ASME
No reproduction or networking permitted without license from IHS
Not for Resale

## TABLE 4 TYPE II, CLASS 1 ANGLE WRENCH, 30 deg / 60 deg HEAD OFFSETS (SI UNITS)

| Nominal Wrench Opening Across Flats, *A* or *B*, mm | Width of Open Head, *W* Max., mm | Thickness of Open Head, *T* Max., mm | Overall Length, *L* Class 1 Max., mm | Proof Torque Open Head Min., N·m |
|---|---|---|---|---|
| 9 | 21.8 | 6.6 | 130 | 21 |
| 10 | 26.0 | 6.9 | 135 | 31 |
| 11 | 26.0 | 7.0 | 142 | 46 |
| 12 | 27.7 | 8.0 | 150 | 49 |
| 13 | 30.2 | 8.9 | 160 | 62 |
| 14 | 32.8 | 8.9 | 170 | 86 |
| 15 | 34.8 | 8.9 | 180 | 104 |
| 16 | 36.4 | 9.4 | 190 | 124 |
| 17 | 39.7 | 9.8 | 200 | 139 |
| 18 | 41.3 | 10.0 | 210 | 155 |
| 19 | 42.7 | 10.1 | 220 | 186 |
| 21 | 47.6 | 11.7 | 236 | 248 |
| 22 | 48.3 | 12.0 | 247 | 279 |
| 24 | 53.5 | 12.5 | 262 | 341 |
| 27 | 60.2 | 14.7 | 291 | 432 |

## TABLE 5 TYPE II, CLASS 2 ANGLE WRENCH, 15 deg / 60 deg HEAD OFFSETS (CUSTOMARY UNITS)

| Nominal Wrench Opening Across Flats A or B | | Width of Open Head | | Thickness of Open Head | | Overall Length, *L* Class 1 Max., in. | Proof Torque Open Head | |
|---|---|---|---|---|---|---|---|---|
| 15 deg Head, in. | 60 deg Head, in. | 15 deg Head, *W* Max., in. | 60 deg Head, *W* Max., in. | 15 deg Head, *T* Max., in. | 60 deg Head, *T* Max., in. | | 15 deg Head Min., lbf-in. | 60 deg Head Min., lbf-in. |
| 1/8 | 1/8 | 0.359 | 0.359 | 0.141 | 0.141 | 3.130 | 15 | 15 |
| 5/32 | 5/32 | 0.438 | 0.438 | 0.141 | 0.141 | 3.190 | 20 | 20 |
| 3/16 | 3/16 | 0.500 | 0.500 | 0.156 | 0.156 | 3.280 | 24 | 24 |
| 7/32 | 7/32 | 0.563 | 0.563 | 0.172 | 0.172 | 3.380 | 28 | 28 |
| 15/64 | 1/4 | 0.600 | 0.654 | 0.188 | 0.205 | 3.400 | 38 | 38 |
| 1/4 | 15/64 | 0.654 | 0.600 | 0.205 | 0.188 | 3.440 | 38 | 38 |
| 1/4 | 1/4 | 0.654 | 0.654 | 0.205 | 0.205 | 3.500 | 38 | 38 |
| 9/32 | 9/32 | 0.688 | 0.688 | 0.215 | 0.215 | 3.590 | 43 | 43 |
| 9/32 | 5/16 | 0.688 | 0.811 | 0.215 | 0.223 | 3.600 | 43 | 62 |
| 5/16 | 9/32 | 0.811 | 0.688 | 0.223 | 0.215 | 3.690 | 62 | 43 |
| 5/16 | 5/16 | 0.811 | 0.811 | 0.223 | 0.223 | 3.720 | 62 | 62 |
| 11/32 | 11/32 | 0.813 | 0.813 | 0.237 | 0.237 | 3.840 | 105 | 105 |
| 11/32 | 3/8 | 0.813 | 0.906 | 0.237 | 0.250 | 3.890 | 105 | 105 |
| 3/8 | 11/32 | 0.906 | 0.813 | 0.250 | 0.237 | 3.940 | 105 | 105 |
| 3/8 | 3/8 | 0.906 | 0.906 | 0.250 | 0.250 | 3.970 | 105 | 105 |



Copyright ASME International
Provided by IHS under license with ASME
No reproduction or networking permitted without license from IHS
Not for Resale

**TABLE 6 TYPE II, CLASS 2 ANGLE WRENCH, 15 deg AND 60 deg HEAD OFFSETS (SI UNITS)**

| Nominal Wrench Opening Across Flats A or B | | Width of Open Head | | Thickness of Open Head | | | Proof Torque Open Head | |
|---|---|---|---|---|---|---|---|---|
| 15 deg Head, mm | 60 deg Head, mm | 15 deg Head, *W* Max., mm | 60 deg Head, *W* Max., mm | 15 deg Head, *T* Max., mm | 60 deg Head, *T* Max., mm | Overall Length, *L* Class 1 Max., mm | 15 deg Head Min., N·m | 60 deg Head Min., N·m |
| 3.2 | 5.5 | 8.9 | 15.5 | 3.4 | 5.3 | 75 | 1 | 4 |
| 4 | 5 | 10.8 | 12.5 | 3.7 | 3.9 | 78 | 2 | 3 |
| 5 | 4 | 12.5 | 10.8 | 3.9 | 3.7 | 82 | 3 | 2 |
| 5.5 | 3.2 | 15.5 | 8.9 | 5.3 | 3.4 | 84 | 4 | 1 |
| 6 | 7 | 17.3 | 18.3 | 5.8 | 6.3 | 86 | 6 | 7 |
| 7 | 6 | 18.3 | 17.3 | 6.3 | 5.8 | 90 | 7 | 6 |
| 8 | 9 | 21.4 | 21.8 | 6.3 | 6.6 | 94 | 13 | 19 |
| 9 | 8 | 21.8 | 21.4 | 6.6 | 6.3 | 98 | 19 | 13 |
| 10 | 11 | 26.0 | 26.0 | 6.9 | 7.0 | 102 | 28 | 41 |
| 11 | 10 | 26.0 | 26.0 | 7.0 | 6.9 | 106 | 41 | 28 |

Process Qualification tests, when agreed to by the customer, exempts the manufacturer from the Nickel-Chromium thickness requirement of para. 4.7.2(a). Retesting may be required when a significant change occurs in the process, when there is a change in the materials, or when contractually required by the customer.

**5.3.1 Test Preparation.** The quantity and condition of the sample wrenches used for the following testing shall be per the manufacturer's standard practice or as mutually agreed to by the manufacturer and the customer.

**5.3.2 Coating Process Adhesion Test.** Sample wrenches shall pass the file or grind-saw test of ASTM B 571.

**5.3.3 Coating Process Abrasion Test.** Sample wrenches shall have no base material exposed when subjected to 100 L of falling sand test of ASTM D 968 Method A.

**5.3.4 Coating Process Corrosion Test.** Sample wrenches shall be tested for corrosion resistance by exposure to a 48 hr salt spray test, as specified in ASTM B 117, without falling below the ASTM B 537 rating of 6.

## 6 DESIGNATIONS

Wrenches shall be designated by the following data in the sequence shown:

*(a)* Type
*(b)* Class
*(c)* Size of openings
*(d)* Coating

EXAMPLE: Engineer's Wrench, Type I, Class 1, $\frac{1}{2} \times \frac{9}{16}$ openings, Nickel-chrome.

## 7 SAFETY REQUIREMENTS AND LIMITATIONS OF USE

Instructors and employers shall stress proper use and safety in the use of wrenches, information about which can be found in the HTI publication, Guide to Hand Tools-Selection, Safety Tips, Proper Use and Care.



Copyright ASME International
Provided by IHS under license with ASME
No reproduction or networking permitted without license from IHS
Not for Resale

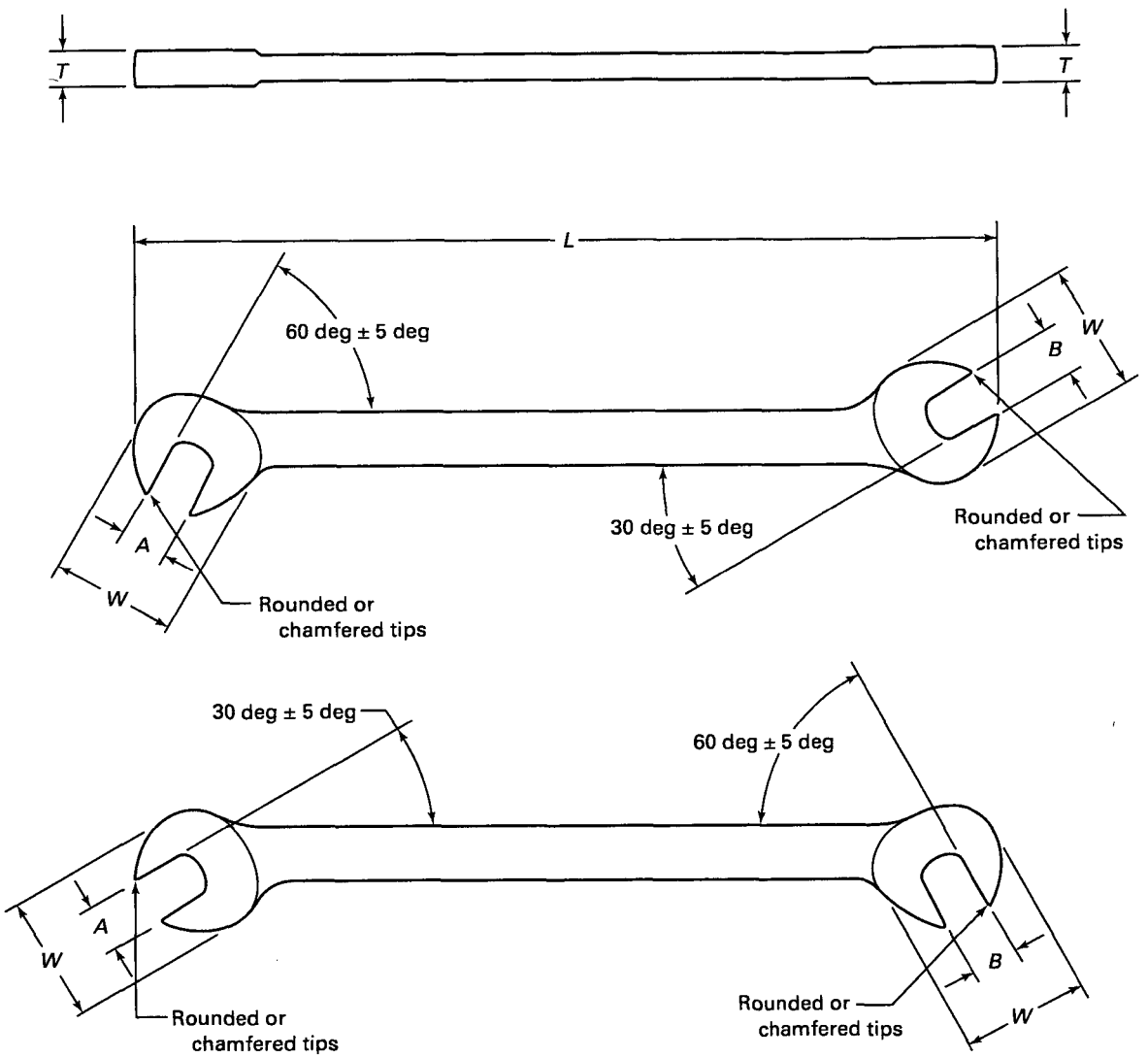


**FIG. 3 TYPE II, CLASS 1, ANGLE WRENCH**



Copyright ASME International
Provided by IHS under license with ASME
No reproduction or networking permitted without license from IHS
Not for Resale

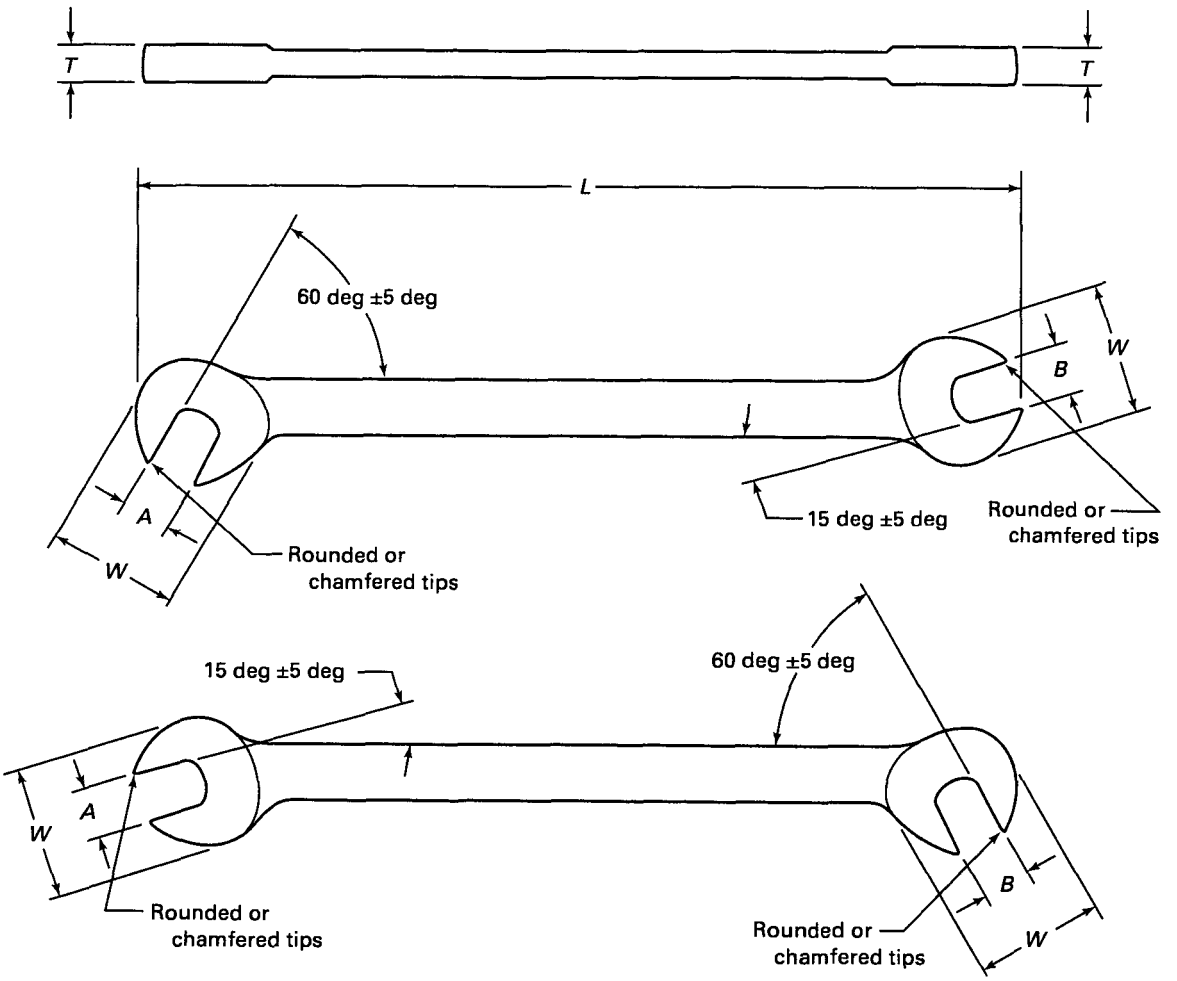


**FIG. 4 TYPE II, CLASS 2, ANGLE WRENCH**



Copyright ASME International
Provided by IHS under license with ASME
No reproduction or networking permitted without license from IHS

Not for Resale

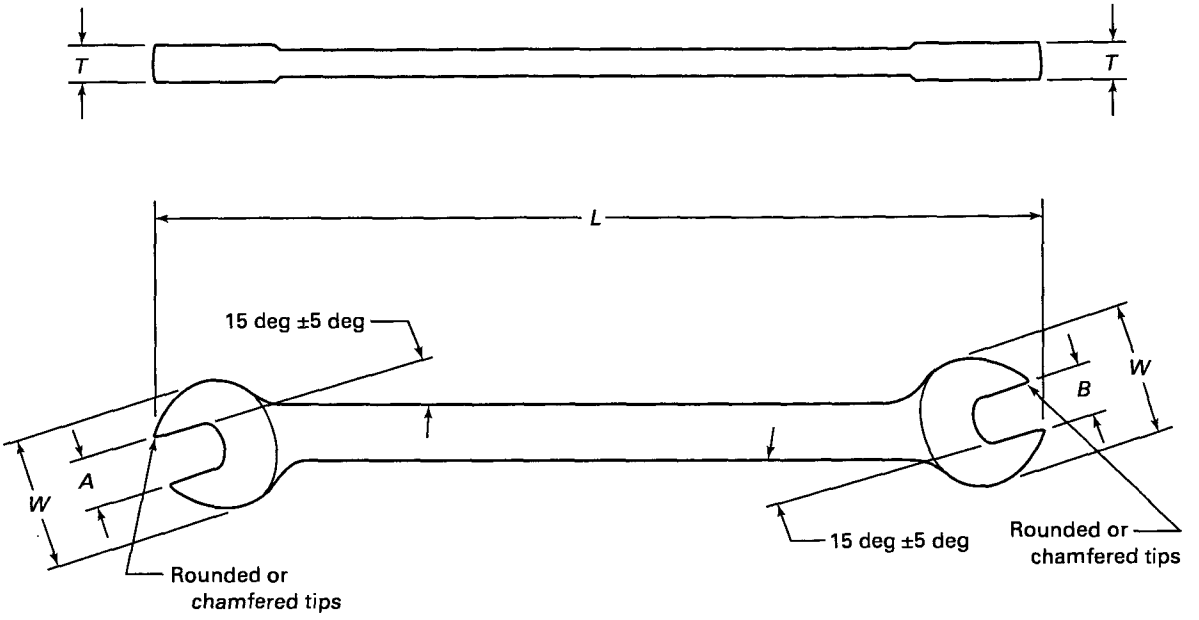


**FIG. 5 TYPE III TAPPET WRENCH**

**TABLE 7 TYPE III, CLASS 1 TAPPET WRENCH, 15 deg ANGLE (CUSTOMARY UNITS)**

| Nominal Wrench Opening Across Flats A or B | | Width of Open Head | | Thickness of Open Head | | Overall Length, | Proof Torque Open Head | |
|---|---|---|---|---|---|---|---|---|
| Small Head, in. | Large Head, in. | Small Head, W Max., in. | Large Head, W Max., in. | Small Head, T Max., in. | Large Head, T Max., in. | L Class 1 Max., in. | Small Head Min., lbf-in. | Large Head Min., lbf-in. |
| 5/16 | 3/8 | 0.750 | 0.938 | 0.218 | 0.218 | -5.700 | 75 | -120 |
| 3/8 | 7/16 | 0.938 | 1.187 | 0.218 | 0.218 | -5.700 | -120 | -165 |
| 7/16 | 1/2 | 1.187 | 1.290 | 0.218 | 0.218 | -6.000 | -165 | -286 |
| 7/16 | 17/32 | 1.187 | 1.290 | 0.218 | 0.218 | -6.000 | -165 | -300 |
| 1/2 | 9/16 | 1.290 | 1.437 | 0.218 | 0.218 | -6.300 | -286 | -355 |
| 9/16 | 5/8 | 1.437 | 1.500 | 0.218 | 0.234 | -6.500 | -355 | -432 |
| 5/8 | 11/16 | 1.500 | 1.598 | 0.234 | 0.234 | -7.000 | -432 | -516 |
| 11/16 | 3/4 | 1.598 | 1.705 | 0.234 | 0.234 | -7.500 | -516 | -607 |
| 3/4 | 7/8 | 1.705 | 1.990 | 0.234 | 0.234 | -8.000 | -607 | -812 |
| 13/16 | 7/8 | 1.840 | 1.990 | 0.234 | 0.234 | -8.500 | -710 | -812 |
| 15/16 | 1 | 2.115 | 2.250 | 0.250 | 0.250 | -8.700 | -941 | 1053 |
| 1 1/16 | 1 1/8 | 2.357 | 2.494 | 0.250 | 0.250 | 10.000 | 1318 | 1494 |
| 1 1/4 | 1 5/16 | 2.768 | 2.905 | 0.260 | 0.260 | 11.000 | 1886 | 2100 |
| 1 3/8 | 1 7/16 | 3.042 | 3.179 | 0.277 | 0.277 | 12.000 | 2326 | 2564 |
| 1 1/2 | 1 5/8 | 3.315 | 3.589 | 0.291 | 0.291 | 13.000 | 2815 | 3353 |
| 1 11/16 | 1 7/8 | 3.725 | 4.136 | 0.315 | 0.315 | 14.000 | 3641 | 4550 |



Copyright ASME International
Provided by IHS under license with ASME
No reproduction or networking permitted without license from IHS
Not for Resale

## TABLE 8 TYPE III, CLASS 1 TAPPET WRENCH, 15 deg ANGLE (SI UNITS)

| Nominal Wrench Opening Across Flats | | Width of Open Head | | Thickness of Open Head | | | Proof Torque Open Head | |
|---|---|---|---|---|---|---|---|---|
| Small Head, *A* mm | Large Head, *B*, mm | Small Head, *W* Max., mm | Large Head, *W* Max., mm | Small Head, *T* Max., mm | Large Head, *T* Max., mm | Overall Length, *L* Class 1 Min., mm | Small Head Min., N·m | Large Head Min., N·m |
| 6 | 7 | 16.4 | 18.4 | 4.0 | 4.0 | 114 | 4 | 6 |
| 8 | 9 | 20.4 | 21.9 | 4.2 | 4.2 | 120 | 9 | 13 |
| 8 | 10 | 20.4 | 24.4 | 4.2 | 4.5 | 125 | 9 | 17 |
| 10 | 11 | 24.4 | 26.4 | 4.5 | 4.5 | 136 | 17 | 21 |
| 12 | 13 | 28.4 | 30.4 | 4.7 | 4.8 | 142 | 26 | 32 |
| 12 | 14 | 28.4 | 32.4 | 4.7 | 4.8 | 147 | 26 | 38 |
| 13 | 15 | 30.4 | 34.4 | 4.8 | 4.8 | 152 | 32 | 46 |
| 14 | 15 | 32.4 | 34.4 | 4.8 | 4.8 | 150 | 38 | 46 |
| 16 | 18 | 36.6 | 41.0 | 5.0 | 5.1 | 169 | 53 | 71 |
| 17 | 19 | 38.8 | 43.2 | 5.1 | 5.6 | 174 | 62 | 81 |
| 19 | 22 | 43.2 | 48.3 | 5.6 | 6.0 | 185 | 81 | 116 |
| 21 | 24 | 46.3 | 52.3 | 6.0 | 6.0 | 196 | 103 | 143 |
| 27 | 30 | 56.0 | 62.0 | 7.1 | 7.1 | 300 | 187 | 238 |



Copyright ASME International
Provided by IHS under license with ASME
No reproduction or networking permitted without license from IHS
Not for Resale

## TABLE 9 HEXAGON MANDREL DIMENSIONS (CUSTOMARY UNITS)

| Nominal Size of Wrench Opening, in. | Hexagon Mandrel Dimensions, in. | | |
|---|---|---|---|
| | Across Flats Tolerance | | Across Corners, Min., in. [Note (1)] |
| | Plus | Minus | |
| 1/8 | 0.001 | 0.002 | 0.1403 |
| 5/32 | 0.001 | 0.002 | 0.1745 |
| 13/64 | 0.001 | 0.002 | 0.2095 |
| 3/16 | 0.001 | 0.002 | 0.2268 |
| 7/32 | 0.001 | 0.002 | 0.2440 |
| 15/64 | 0.001 | 0.002 | 0.2610 |
| 1/4 | 0.001 | 0.002 | 0.2780 |
| 9/32 | 0.001 | 0.002 | 0.3133 |
| 5/16 | 0.001 | 0.002 | 0.3495 |
| 11/32 | 0.001 | 0.002 | 0.3860 |
| 3/8 | 0.001 | 0.002 | 0.4225 |
| 7/16 | 0.001 | 0.002 | 0.4935 |
| 1/2 | 0.001 | 0.003 | 0.5635 |
| 9/16 | 0.001 | 0.003 | 0.6339 |
| 5/8 | 0.001 | 0.003 | 0.7055 |
| 11/16 | 0.001 | 0.003 | 0.7769 |
| 3/4 | 0.001 | 0.003 | 0.8485 |
| 13/16 | 0.001 | 0.003 | 0.9201 |
| 7/8 | 0.001 | 0.003 | 0.9917 |
| 15/16 | 0.001 | 0.003 | 1.0631 |
| 1 | 0.001 | 0.003 | 1.1297 |
| 1 1/16 | 0.001 | 0.003 | 1.2013 |
| 1 1/8 | 0.001 | 0.003 | 1.2728 |
| 1 3/16 | 0.001 | 0.003 | 1.343 |
| 1 1/4 | 0.001 | 0.003 | 1.416 |
| 1 5/16 | 0.001 | 0.003 | 1.487 |
| 1 3/8 | 0.001 | 0.003 | 1.559 |
| 1 7/16 | 0.001 | 0.003 | 1.631 |
| 1 1/2 | 0.001 | 0.003 | 1.702 |
| 1 9/16 | 0.001 | 0.007 | 1.770 |
| 1 5/8 | 0.001 | 0.007 | 1.841 |
| 1 11/16 | 0.001 | 0.007 | 1.912 |
| 1 3/4 | 0.001 | 0.007 | 1.983 |
| 1 13/16 | 0.001 | 0.007 | 2.054 |
| 1 7/8 | 0.001 | 0.007 | 2.124 |
| 1 15/16 | 0.001 | 0.007 | 2.195 |
| 2 | 0.001 | 0.007 | 2.266 |
| 2 1/16 | 0.001 | 0.007 | 2.337 |
| 2 1/8 | 0.001 | 0.007 | 2.408 |
| 2 3/16 | 0.001 | 0.007 | 2.479 |
| 2 1/4 | 0.001 | 0.007 | 2.549 |

NOTE:
(1) For sizes not listed, multiply nominal size by 1.133055 for mandrel dimension across corners. Applicable to mandrels over 1 1/2 in. nominal size.

## TABLE 10 HEXAGON MANDREL DIMENSIONS (SI UNITS)

| Nominal Size of Wrench Opening, mm | Hexagon Mandrel Dimensions, mm | | |
|---|---|---|---|
| | Across Flats Tolerance | | Across Corners, Min., mm [Note (1)] |
| | Plus | Minus | |
| 3.2 | 0.025 | 0.050 | 3.57 |
| 4 | 0.025 | 0.050 | 4.46 |
| 5 | 0.025 | 0.050 | 5.58 |
| 5.5 | 0.025 | 0.050 | 6.13 |
| 6 | 0.025 | 0.050 | 6.68 |
| 6.3 | 0.025 | 0.050 | 7.02 |
| 7 | 0.025 | 0.050 | 7.79 |
| 8 | 0.025 | 0.050 | 8.95 |
| 9 | 0.025 | 0.050 | 10.11 |
| 10 | 0.025 | 0.050 | 11.27 |
| 11 | 0.025 | 0.050 | 12.40 |
| 12 | 0.025 | 0.076 | 13.53 |
| 13 | 0.025 | 0.076 | 14.67 |
| 14 | 0.025 | 0.076 | 15.80 |
| 15 | 0.025 | 0.076 | 16.92 |
| 16 | 0.025 | 0.076 | 18.06 |
| 17 | 0.025 | 0.076 | 19.20 |
| 18 | 0.025 | 0.076 | 20.35 |
| 19 | 0.025 | 0.076 | 21.49 |
| 20 | 0.025 | 0.076 | 22.64 |
| 21 | 0.025 | 0.076 | 23.78 |
| 22 | 0.025 | 0.076 | 24.93 |
| 23 | 0.025 | 0.076 | 26.07 |
| 24 | 0.025 | 0.076 | 27.20 |
| 25 | 0.025 | 0.076 | 28.27 |
| 26 | 0.025 | 0.076 | 29.38 |
| 27 | 0.025 | 0.076 | 30.53 |
| 28 | 0.025 | 0.076 | 31.67 |
| 29 | 0.025 | 0.076 | 32.81 |
| 30 | 0.025 | 0.076 | 33.96 |
| 31 | 0.025 | 0.076 | 35.10 |
| 32 | 0.025 | 0.076 | 36.25 |
| 33 | 0.025 | 0.076 | 37.38 |
| 34 | 0.025 | 0.076 | 38.52 |
| 35 | 0.025 | 0.076 | 39.68 |
| 36 | 0.025 | 0.076 | 40.83 |
| 38 | 0.025 | 0.076 | 43.11 |
| 40 | 0.025 | 0.177 | 45.32 |
| 41 | 0.025 | 0.177 | 46.45 |
| 42 | 0.025 | 0.177 | 47.59 |
| 46 | 0.025 | 0.177 | 52.12 |
| 50 | 0.025 | 0.177 | 56.65 |

NOTE:
(1) For sizes not listed, multiply nominal size by 1.133055 for mandrel dimension across corners. Applicable to mandrels over 38 mm nominal size.



Copyright ASME International
Provided by IHS under license with ASME
No reproduction or networking permitted without license from IHS
Not for Resale

# ASME B107.40

**1 Scope** ..... 35

**2 Classification** ..... 35

**3 Normative References** ..... 35

**4 Requirements** ..... 35
4.1 Illustrations ..... 35
4.2 Materials ..... 35
4.3 Markings ..... 35
4.4 Hardness ..... 35
4.5 Proof Torque ..... 36
4.6 Wrench Opening ..... 36
4.7 Finish ..... 36
4.8 Design ..... 37

**5 Test Procedures** ..... 37
5.1 Hardness ..... 37
5.2 Proof Torque Test ..... 37
5.3 Coating Process Qualification Test ..... 40

**6 Designations** ..... 42

**7 Safety Requirements and Limitations of Use** ..... 42

**Figures**
1 Finish Requirements ..... 36
2 Type I, Flare Nut Wrench ..... 38
3 Type II Flare-Nut Combintation Wrench ..... 39

**Tables**
1 Type I Flare Nut Wrench (Customary Units) ..... 38
2 Type I Flare Nut Wrench (SI Units) ..... 39
3 Type II Flare Nut Combination Wrench (Customary Units) ..... 40
4 Type II Flare Nut Combination Wrench (SI Units) ..... 40
5 Hexagon Mandrel Dimensions (Customary Units) ..... 41
6 Hexagon Mandrel Dimensions (SI Units) ..... 41



Copyright ASME International
Provided by IHS under license with ASME
No reproduction or networking permitted without license from IHS

Not for Resale

# FLARE NUT WRENCHES (INCH AND METRIC SERIES)

## 1 SCOPE

This Standard provides the general, dimensional, performance, and safety requirements for flare nut wrenches, including combination, offset slotted box and open end. Inclusion of dimensional data in this Standard is not intended to imply that all of the products described herein are stock production sizes. Customers are requested to consult with manufacturers concerning lists of stock production sizes.

## 2 CLASSIFICATION

*Flare nut wrench*

**Type I** double head, slotted box end
**Type II** combination, open end and 15 deg offset slotted box end

## 3 NORMATIVE REFERENCES

The following documents form a part of this Standard to the extent specified herein. At the time of publication, the editions indicated were valid. All standards are subject to revision, and parties to agreements based on this Standard are encouraged to investigate the possibility of applying the most recent editions of the documents indicated below.

ASME B107.17M-1997 Gages, Wrench Openings, Reference

Publisher: The American Society of Mechanical Engineers (ASME International), Three Park Avenue, New York, NY 10016-5990; Order Department: 22 Law Drive, PO Box 2300, Fairfield, NJ 07007-2300

ASTM E 18-97 Standard Test Methods for Rockwell Hardness and Rockwell Superficial Hardness of Metallic Materials

ASTM B 117-97 Standard Practice for Operating Salt Spray (Fog) Apparatus

ASTM B 537-70 Standard Practice for Rating of Electroplated Panels Subjected to Atmospheric Exposure

ASTM B 571-97 Standard Test Methods for Adhesion of Metallic Materials.

ASTM D 968-93 Standard Test Methods for Abrasion Resistance of Organic Coatings by Falling Abrasive

Publisher: The American Society for Testing and Materials (ASTM), 100 Barr Harbor Drive, West Conshohocken, PA 19428-2959

Guide to Hand Tools-Selection, Safety Tips, Proper Use and Care

Publisher: Hand Tools Institute (HTI), 25 North Broadway, Tarrytown, NY 10591

## 4 REQUIREMENTS

### 4.1 Illustrations

The illustrations shown herein are descriptive and not restrictive, and are not intended to preclude the manufacture of wrenches which are otherwise in accordance with this Standard.

### 4.2 Materials

The materials used in the manufacturing of the wrenches shall be such as to produce wrenches conforming to this Standard.

### 4.3 Markings

Each flare nut wrench shall be marked on one of the faces or on the handle as close to each head as is practical in a plain and permanent manner with the respective nominal wrench opening as shown in the first column of the applicable table. In addition to size markings, each wrench shall be marked in a plain and permanent manner with manufacturer's name or trademark of such known character that the source of manufacture and country of origin may be readily determined.

### 4.4 Hardness

Wrenches shall be heat treated to a hardness of 38 HRC to 55 HRC when tested as specified in para. 5.1.



Copyright ASME International
Provided by IHS under license with ASME
No reproduction or networking permitted without license from IHS
Not for Resale

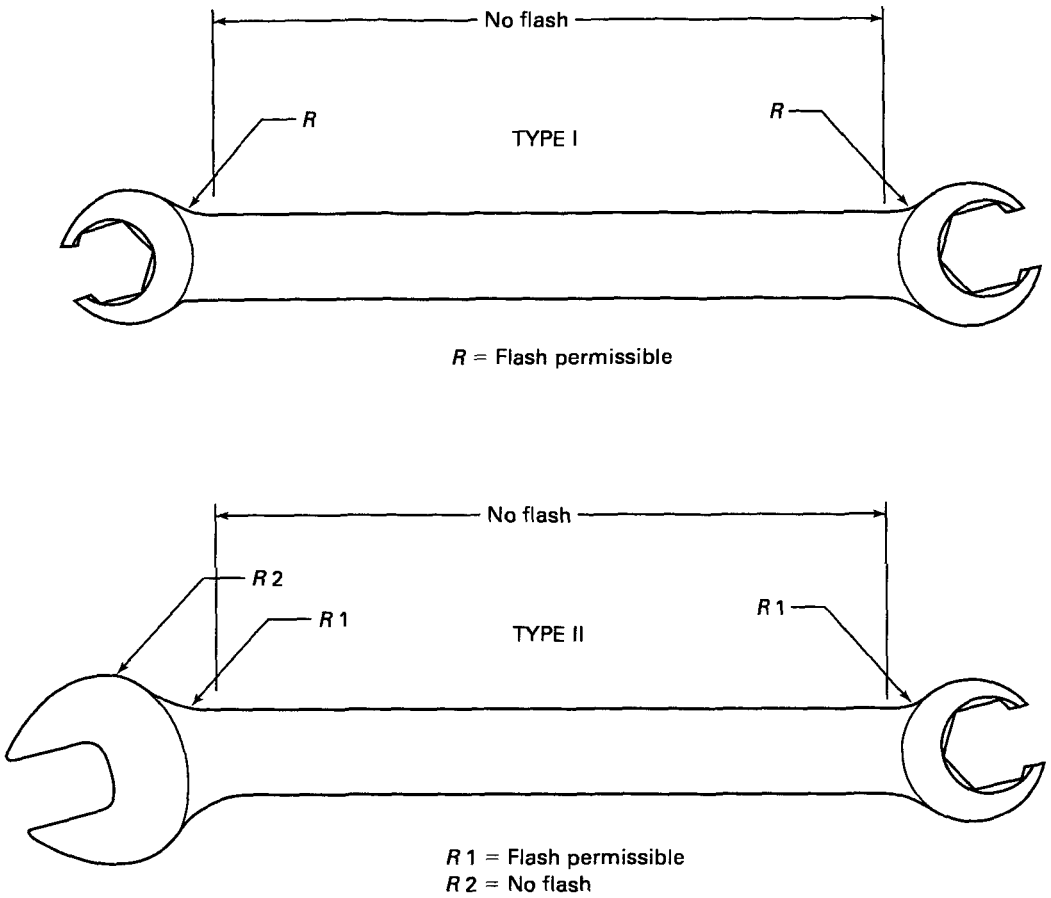


**FIG. 1 FINISH REQUIREMENTS**

### 4.5 Proof Torque

When tested as specified, wrenches shall withstand the proof torque specified in the applicable tables without failure or permanent deformation (set), which might affect the durability or serviceability of the wrenches. Proof torque is a predetermined test torque to which a sample is subjected before acceptance.

### 4.6 Wrench Opening

Wrench openings shall be such as to insure acceptance when gaged with gages conforming to ASME B107.17M.

### 4.7 Finish

**4.7.1 Surface Finish.** See Fig. 1. All surfaces shall be thoroughly cleaned, free from cracks, and essentially free from burrs, pits, nodules, and other detrimental conditions.

*(a) Minimum Area of Surface Finish.* A minimum of 180 deg of the outer periphery (90 deg on each side of the longitudinal axis of the wrench opening), or the faces of the slotted box ends, and both faces of the open end, shall be bright and shall have a maximum roughness height value of 30 μin. (0.76 μm) (arithmetic average using a 0.03 in. cutoff on the surface measurement instrument). Wrenches with phosphate or oxide coatings are excluded from this requirement.

*(b) Flash.* Flash shall be completely removed from the periphery of the heads of all slotted box ends, from the circumference of all open ends, and from that portion of the handle which shall be essentially straight and uniform in sectional dimensions. Any remaining flash on any surface shall blend smoothly with adjacent surfaces; external sharp edges shall be broken to 0.016 in. (0.38 mm) radius minimum, and shall not project more than 0.016 in. (0.38 mm) from adjacent surfaces.



Copyright ASME International
Provided by IHS under license with ASME
No reproduction or networking permitted without license from IHS
Not for Resale

**4.7.2 Coatings.** The coating shall be adherent, smooth, continuous, and free from uncoated areas, pits, blisters, nodules, and any other conditions which would interfere with their protective value and serviceability. The wrench shall be coated with one (or a combination) of the coatings in accordance with (a), (b), (c), or (d) below. The customer may specify the type of coating required.

*(a) Nickel-Chromium.* Wrenches shall have a protective-decorative nickel-chromium plating. The nickel thickness shall be a minimum of 0.000150 in. (0.0038 mm). The chromium thickness shall be a minimum of 0.000003 in. (0.000076 mm). A nickel-iron undercoating (16% iron max.) may be substituted for nickel.

*(b) Phosphate.* Wrenches shall have a chemically produced phosphate coating followed by a coating of rust preventative.

*(c) Oxide.* Oxide coated wrenches shall have a coating consisting of a chemically produced oxide followed by a coating of rust preventative.

*(d) Alternative Coatings.* Wrenches not falling within one of the coating types listed above shall be finished in accordance with predetermined requirements between manufacturer and consumer. Alternative coatings may be used in lieu of Nickel-Chromium and shall be subjected to the Coating Process Qualification Test as specified in para. 5.3.

### 4.8 Design

*Type I* wrenches shall be suitable for use with hexagonal flare nuts. Each opening shall have either 6 or 12 point slotted box opening as specified. Wrenches shall be similar to Fig. 2 and conform to Tables 1 and 2 as applicable.

*Type II* wrenches shall have one open end and one with a 6 or 12 point slotted box opening of identical nominal size. The wrench shall be suitable for use on hexagonal flare nuts. Wrenches shall be similar to Fig. 3 and conform to Tables 3 and 4 as applicable. Wrenches shall be so designed as to afford a well proportioned, comfortable handgrip, and be similar to the figure to which reference is made. The engaging surfaces of the wrench openings shall be finished in a smooth and well-defined manner. The corners and serrations in the slotted box wrench openings shall be clearly defined (not smeared or torn). Wrenches that have a slotted box end design, shall be chamfered on both sides to provide a lead for the working surfaces as illustrated in Figs. 2 and 3. Wrenches that have an open end design shall have the tips (working ends) chamfered or rounded to eliminate burrs as illustrated in Fig. 3.

## 5 TEST PROCEDURES

Many of the tests herein are inherently hazardous and adequate safeguards for personnel and property shall be employed in conducting these tests.

### 5.1 Hardness

Hardness shall be tested in accordance with ASTM E 18. When surface preparation is necessary, the amount of material removed shall not exceed 0.007 in. (0.18 mm) in the area contacted by the indenter.

### 5.2 Proof Torque Test

Proof Torque Test shall be conducted to determine conformance with the applicable proof torque requirements specified in para. 4.5.

**5.2.1 Wrench Preparation.** In order to prepare the wrench for test, suitable reference lines may be scribed on the heads and handle. After application of proof torque, examination for permanent deformation shall be made.

**5.2.2 Mandrels for Wrench Openings.** Suitable mandrels shall be used to fit into the wrench opening and to provide the proper support and necessary strength for the proof torque applied. The wrenches shall be tested on hexagonal mandrels. Mandrels shall conform to the dimensions and tolerances of Tables 5 and 6. Mandrels shall be hardened to show a hardness of not less than 55 HRC and smoothly finished on the wrench engaging surfaces.

**5.2.3 Application of Proof Torque.** The proof torque specified in the applicable table is the torque applied to the test mandrel which tends to rotate the mandrel about its longitudinal axis. Wrench openings shall be gaged prior to testing. The torque shall be applied to mandrels, which are fully seated and extend through the wrenching surfaces. The force required to produce the torque shall be applied as far from the mandrel as practical.

*(a) Slotted Box Ends.* Slotted box ends shall be torqued to the proof torque. Following the removal of the proof torque, they shall be regaged. Any slotted box end which does not sustain the test torque, cracks, fractures, slips on mandrel, or does not gage after torquing has failed the test. Wrench failure has also occurred if there is visible permanent distortion in the handle and/or permanent deformation of the slotted box head with respect to the handle in excess of 5 deg.

*(b) Open Ends.* Open ends shall be torqued to the



Copyright ASME International
Provided by IHS under license with ASME
No reproduction or networking permitted without license from IHS
Not for Resale

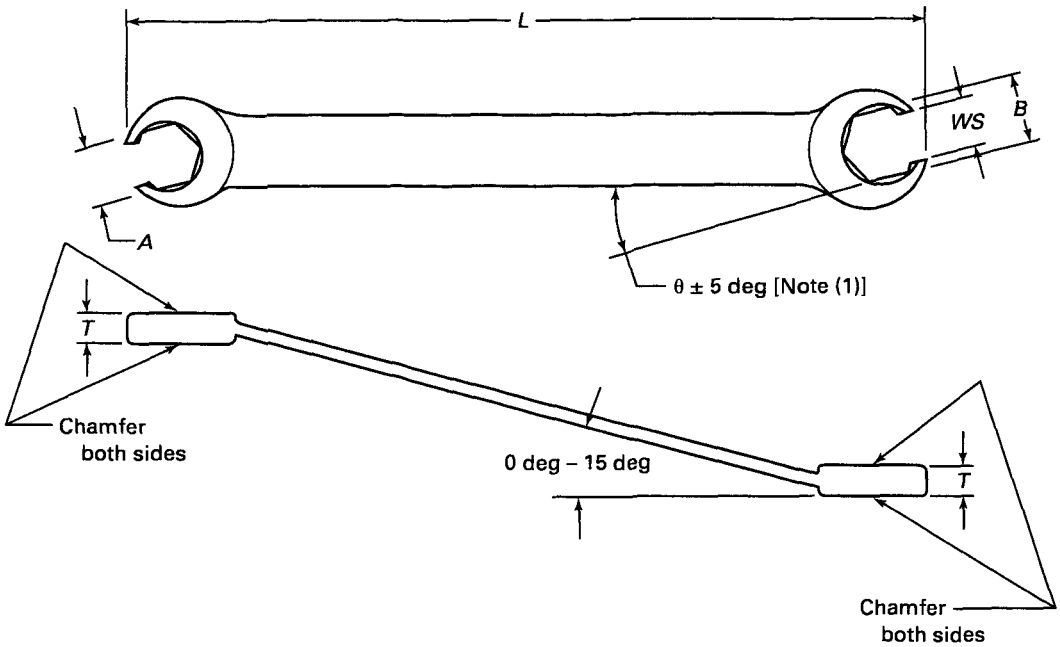


NOTE:
(1) Theta (θ) to be 0 deg or an increment of 7½ deg

**FIG. 2 TYPE I, FLARE-NUT WRENCH**

**TABLE 1 TYPE I FLARE NUT WRENCH (CUSTOMARY UNITS)**

| Nominal Wrench Opening Across Flats | | Outside Diameter of Head, *OD* | | Width of Slot in Head, *WS* | | Thickness of Head, *T* | | Overall Length, *L* | Proof Torque | |
|---|---|---|---|---|---|---|---|---|---|---|
| Small Head, *A* | Large Head, *B* | Small Head, *A* Max., in. | Large Head, *B* Max., in. | Small Head, *A* Min., in. | Large Head, *B* Min., in. | Small Head, *A* Max., in. | Large Head, *B* Max., in. | Type I Min., in. | Small Head, *A* Min., lbf-in. | Large Head, *B* Min., lbf-in. |
| 1/4 | 5/16 | 0.656 | 0.750 | 0.109 | 0.141 | 0.291 | 0.344 | 3.750 | 110 | 170 |
| 5/16 | 3/8 | 0.750 | 0.875 | 0.141 | 0.188 | 0.344 | 0.406 | 4.500 | 170 | 240 |
| 3/8 | 7/16 | 0.875 | 0.938 | 0.188 | 0.250 | 0.406 | 0.453 | 4.875 | 240 | 320 |
| 7/16 | 1/2 | 0.938 | 1.156 | 0.250 | 0.313 | 0.453 | 0.484 | 5.500 | 320 | 400 |
| 1/2 | 9/16 | 1.156 | 1.188 | 0.313 | 0.344 | 0.484 | 0.484 | 5.625 | 400 | 510 |
| 5/8 | 11/16 | 1.281 | 1.438 | 0.406 | 0.438 | 0.625 | 0.625 | 6.250 | 625 | 750 |
| 5/8 | 3/4 | 1.281 | 1.438 | 0.406 | 0.438 | 0.625 | 0.625 | 6.750 | 625 | 880 |
| 5/8 | 13/16 | 1.281 | 1.500 | 0.406 | 0.531 | 0.625 | 0.625 | 7.000 | 625 | 1025 |
| 3/4 | 13/16 | 1.438 | 1.500 | 0.438 | 0.531 | 0.625 | 0.625 | 7.000 | 880 | 1025 |
| 3/4 | 7/8 | 1.438 | 1.641 | 0.438 | 0.531 | 0.625 | 0.625 | 7.000 | 880 | 1180 |
| 3/4 | 1 | 1.438 | 1.750 | 0.438 | 0.656 | 0.625 | 0.813 | 8.000 | 880 | 1510 |
| 7/8 | 15/16 | 1.641 | 1.750 | 0.531 | 0.578 | 0.625 | 0.813 | 8.000 | 1180 | 1340 |
| 7/8 | 1 | 1.641 | 1.750 | 0.531 | 0.656 | 0.625 | 0.813 | 8.000 | 1180 | 1510 |
| 7/8 | 1 1/8 | 1.641 | 1.938 | 0.531 | 0.750 | 0.625 | 0.875 | 8.000 | 1180 | 1880 |
| 15/16 | 1 1/16 | 1.750 | 1.813 | 0.578 | 0.656 | 0.813 | 0.813 | 8.000 | 1340 | 1700 |
| 1 | 1 1/16 | 1.750 | 1.813 | 0.656 | 0.656 | 0.813 | 0.813 | 9.000 | 1510 | 1700 |



Copyright ASME International
Provided by IHS under license with ASME
No reproduction or networking permitted without license from IHS
Not for Resale

## TABLE 2 TYPE I FLARE NUT WRENCH (SI UNITS)

| Nominal Wrench Opening Across Flats | | Outside Diameter of Head, *OD* | | Width of Slot in Head, *WS* | | Thickness of Head, *T* | | Overall Length, *L* | Proof Torque | |
|---|---|---|---|---|---|---|---|---|---|---|
| Small Head, *A* mm | Large Head, *B* mm | Small Head, *A* Max., mm | Large Head, *B* Max., mm | Small Head, *A* Min., mm | Large Head, *B* Min., mm | Small Head, *A* Max., in. | Large Head, *B* Max., mm | Type I Min., mm | Small Head, *A* Min., N·m | Large Head, *B* Min., N·m |
| 7 | 8 | 17.3 | 19.0 | 4.5 | 4.5 | 7.6 | 8.5 | 101 | 15 | 20 |
| 7 | 9 | 17.3 | 22.0 | 4.5 | 4.7 | 7.6 | 10.0 | 109 | 15 | 25 |
| 8 | 10 | 19.0 | 23.5 | 4.5 | 5.5 | 8.5 | 10.5 | 116 | 20 | 30 |
| 9 | 11 | 22.0 | 24.0 | 4.7 | 6.4 | 10.0 | 10.5 | 123 | 25 | 35 |
| 10 | 12 | 23.5 | 25.5 | 5.5 | 7.0 | 10.5 | 11.1 | 135 | 30 | 40 |
| 11 | 13 | 24.0 | 27.0 | 6.4 | 8.5 | 10.5 | 11.1 | 140 | 35 | 45 |
| 12 | 14 | 25.5 | 28.0 | 7.0 | 9.5 | 11.1 | 12.0 | 140 | 40 | 55 |
| 13 | 14 | 27.0 | 28.0 | 8.5 | 9.5 | 11.1 | 12.0 | 150 | 45 | 55 |
| 15 | 17 | 30.2 | 32.2 | 10.3 | 12.0 | 12.0 | 13.5 | 170 | 65 | 85 |
| 16 | 17 | 31.2 | 32.2 | 10.3 | 12.0 | 12.0 | 13.5 | 170 | 75 | 85 |
| 16 | 18 | 31.2 | 33.6 | 10.3 | 12.5 | 12.0 | 14.7 | 177 | 75 | 95 |
| 18 | 20 | 33.6 | 37.5 | 12.5 | 14.0 | 14.0 | 14.7 | 180 | 95 | 120 |
| 19 | 21 | 35.9 | 41.3 | 13.0 | 15.1 | 14.7 | 15.2 | 184 | 105 | 130 |
| 19 | 22 | 35.9 | 41.3 | 13.0 | 15.9 | 14.7 | 15.2 | 190 | 105 | 145 |

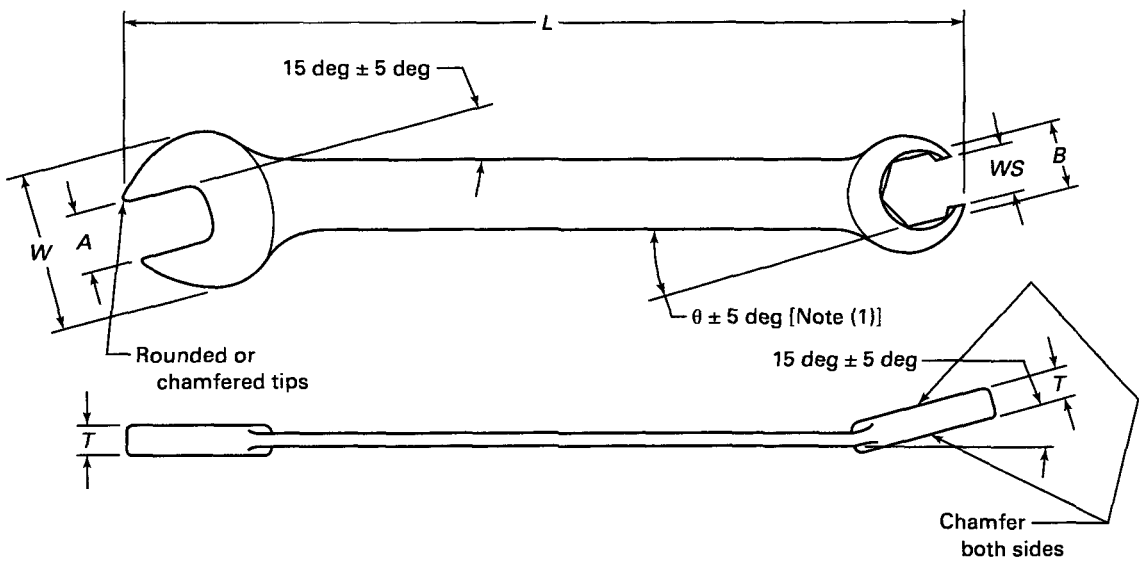


NOTE:
(1) Theta (θ) to be 0 deg or an increment of 7½ deg

## FIG. 3 TYPE II FLARE-NUT COMBINATION WRENCH



Copyright ASME International
Provided by IHS under license with ASME
No reproduction or networking permitted without license from IHS
Not for Resale

**TABLE 3 TYPE II FLARE NUT COMBINATION WRENCH (CUSTOMARY UNITS)**

| Nominal Opening Across Flats, *A* or *B*, in. | Width of Open Head, *W* Max., in. | Outside Diameter of Flare Head, *OD* Max., in. | Width of Slot in Flare Head, *WS* Min., in. | Thickness of Open Head, *T* Max., in. | Thickness of Flare Head, *T* Max., in. | Overall Length, *L* Type II Min., in. | Proof Torque | |
|---|---|---|---|---|---|---|---|---|
| | | | | | | | Open Head Min., lbf-in. | Flare Head Min., lbf-in. |
| 5/16 | 0.811 | 0.750 | 0.141 | 0.344 | 0.344 | 4.500 | 138 | 170 |
| 3/8 | 0.906 | 0.875 | 0.188 | 0.406 | 0.406 | 4.875 | 275 | 240 |
| 7/16 | 1.031 | 0.938 | 0.250 | 0.453 | 0.453 | 5.375 | 413 | 320 |
| 1/2 | 1.219 | 1.156 | 0.313 | 0.484 | 0.484 | 5.625 | 550 | 400 |
| 9/16 | 1.281 | 1.188 | 0.344 | 0.484 | 0.484 | 5.750 | 770 | 510 |
| 5/8 | 1.406 | 1.281 | 0.406 | 0.484 | 0.625 | 6.250 | 1,100 | 625 |
| 11/16 | 1.563 | 1.438 | 0.438 | 0.563 | 0.625 | 7.000 | 1,375 | 750 |
| 3/4 | 1.672 | 1.438 | 0.438 | 0.563 | 0.625 | 7.500 | 1,650 | 880 |
| 13/16 | 1.828 | 1.500 | 0.531 | 0.594 | 0.625 | 8.000 | 2,200 | 1,025 |
| 7/8 | 1.938 | 1.641 | 0.531 | 0.625 | 0.625 | 8.300 | 2,475 | 1,180 |
| 15/16 | 2.094 | 1.750 | 0.578 | 0.656 | 0.813 | 9.000 | 3,025 | 1,340 |
| 1 | 2.250 | 1.750 | 0.656 | 0.750 | 0.813 | 10.000 | 3,575 | 1,510 |

**TABLE 4 TYPE II FLARE NUT COMBINATION WRENCH (SI UNITS)**

| Nominal Opening Across Flats, *A* or *B*, mm | Width of Open Head, *W* Max., mm | Outside Diameter of Flare Head, *OD* Max., mm | Width of Slot in Flare Head, *WS* Min., mm | Thickness of Open Head, *T* Max., mm | Thickness of Flare Head, *T* Max., mm | Overall Length, *L* Type II Min., mm | Proof Torque | |
|---|---|---|---|---|---|---|---|---|
| | | | | | | | Open Head Min., N·m | Flare Head Min., N·m |
| 8 | 21.4 | 19.0 | 4.5 | 8.5 | 8.5 | 100 | 15 | 20 |
| 9 | 21.8 | 22.0 | 4.7 | 10.0 | 10.0 | 103 | 21 | 25 |
| 10 | 26.0 | 23.5 | 5.5 | 10.5 | 10.5 | 119 | 31 | 30 |
| 11 | 26.0 | 24.0 | 6.4 | 10.5 | 10.5 | 124 | 46 | 35 |
| 12 | 27.7 | 25.5 | 7.0 | 10.5 | 11.1 | 140 | 49 | 40 |
| 13 | 30.2 | 27.0 | 8.5 | 11.0 | 11.1 | 143 | 62 | 45 |
| 14 | 32.8 | 28.0 | 9.5 | 12.0 | 12.0 | 150 | 86 | 55 |
| 15 | 34.8 | 30.2 | 10.3 | 12.0 | 12.0 | 153 | 104 | 65 |
| 16 | 36.4 | 31.2 | 10.3 | 12.0 | 12.0 | 156 | 124 | 75 |
| 17 | 39.7 | 32.2 | 12.0 | 13.5 | 13.5 | 162 | 139 | 85 |
| 18 | 41.0 | 33.6 | 12.5 | 13.5 | 14.0 | 170 | 155 | 95 |
| 19 | 42.7 | 35.9 | 13.0 | 14.0 | 14.7 | 180 | 186 | 105 |

proof torque. Following the removal of the proof test torque, they shall be regaged. Open ends, which do not sustain the test torque, crack, fracture, slip on the mandrel or exhibit visible handle distortion have failed the test. Wrench failure has also occurred if the open end jaws spread in excess of the "NO GO" gage as specified by ASME B107.17M size by more than the following:

*(1)* 0.002 (0.05 mm) for wrench opening sizes 5/32 in. (4 mm) through 1 in. (25 mm)

*(2)* 0.003 (0.08 mm) for wrench opening sizes 1 1/16 in. (26 mm) through 2 1/4 in. (50 mm)

### 5.3 Coating Process Qualification Test

Alternative coatings shall be subjected to testing in order to certify the manufacturer's production coating process. The Coating Process Test consists of an adhesion, abrasion and corrosion test specified in paras. 5.3.2, 5.3.3, and 5.3.4. The Coating Process Qualification



Copyright ASME International
Provided by IHS under license with ASME
No reproduction or networking permitted without license from IHS
Not for Resale

## TABLE 5 HEXAGON MANDREL DIMENSIONS (CUSTOMARY UNITS)

| Nominal Size of Wrench Opening, in. | Hexagon Mandrel Dimensions, In. | | |
|---|---|---|---|
| | Across Flats Tolerance | | Across Corners, Min., in. [Note 1] |
| | Plus | Minus | |
| 1/8 | 0.001 | 0.002 | 0.1403 |
| 5/32 | 0.001 | 0.002 | 0.1745 |
| 13/64 | 0.001 | 0.002 | 0.2095 |
| 3/16 | 0.001 | 0.002 | 0.2268 |
| 7/32 | 0.001 | 0.002 | 0.2440 |
| 15/64 | 0.001 | 0.002 | 0.2610 |
| 1/4 | 0.001 | 0.002 | 0.2780 |
| 9/32 | 0.001 | 0.002 | 0.3133 |
| 5/16 | 0.001 | 0.002 | 0.3495 |
| 11/32 | 0.001 | 0.002 | 0.3860 |
| 3/8 | 0.001 | 0.002 | 0.4225 |
| 7/16 | 0.001 | 0.002 | 0.4935 |
| 1/2 | 0.001 | 0.003 | 0.5635 |
| 9/16 | 0.001 | 0.003 | 0.6339 |
| 5/8 | 0.001 | 0.003 | 0.7055 |
| 11/16 | 0.001 | 0.003 | 0.7769 |
| 3/4 | 0.001 | 0.003 | 0.8485 |
| 13/16 | 0.001 | 0.003 | 0.9201 |
| 7/8 | 0.001 | 0.003 | 0.9917 |
| 15/16 | 0.001 | 0.003 | 1.0631 |
| 1 | 0.001 | 0.003 | 1.1297 |
| 1 1/16 | 0.001 | 0.003 | 1.2013 |
| 1 1/8 | 0.001 | 0.003 | 1.2728 |
| 1 3/16 | 0.001 | 0.003 | 1.343 |
| 1 1/4 | 0.001 | 0.003 | 1.416 |
| 1 5/16 | 0.001 | 0.003 | 1.487 |
| 1 3/8 | 0.001 | 0.003 | 1.559 |
| 1 7/16 | 0.001 | 0.003 | 1.631 |
| 1 1/2 | 0.001 | 0.003 | 1.702 |
| 1 9/16 | 0.001 | 0.007 | 1.770 |
| 1 5/8 | 0.001 | 0.007 | 1.841 |
| 1 11/16 | 0.001 | 0.007 | 1.912 |
| 1 3/4 | 0.001 | 0.007 | 1.983 |
| 1 13/16 | 0.001 | 0.007 | 2.054 |
| 1 7/8 | 0.001 | 0.007 | 2.124 |
| 1 15/16 | 0.001 | 0.007 | 2.195 |
| 2 | 0.001 | 0.007 | 2.266 |
| 2 1/16 | 0.001 | 0.007 | 2.337 |
| 2 1/8 | 0.001 | 0.007 | 2.408 |
| 2 3/16 | 0.001 | 0.007 | 2.479 |
| 2 1/4 | 0.001 | 0.007 | 2.549 |

NOTE:
(1) For sizes not listed, multiply nominal size by 1.133055 for mandrel dimension across corners. Applicable to mandrels over 1 1/2 in. nominal size.

## TABLE 6 HEXAGON MANDREL DIMENSIONS (SI UNITS)

| Nominal Size of Wrench Opening, mm | Hexagon Mandrel Dimensions, mm | | |
|---|---|---|---|
| | Across Flats Tolerance | | Across Corners, Min., mm [Note 1] |
| | Plus | Minus | |
| 3.2 | 0.025 | 0.050 | 3.57 |
| 4 | 0.025 | 0.050 | 4.46 |
| 5 | 0.025 | 0.050 | 5.58 |
| 5.5 | 0.025 | 0.050 | 6.13 |
| 6 | 0.025 | 0.050 | 6.68 |
| 6.3 | 0.025 | 0.050 | 7.02 |
| 7 | 0.025 | 0.050 | 7.79 |
| 8 | 0.025 | 0.050 | 8.95 |
| 9 | 0.025 | 0.050 | 10.11 |
| 10 | 0.025 | 0.050 | 11.27 |
| 11 | 0.025 | 0.050 | 12.40 |
| 12 | 0.025 | 0.076 | 13.53 |
| 13 | 0.025 | 0.076 | 14.67 |
| 14 | 0.025 | 0.076 | 15.80 |
| 15 | 0.025 | 0.076 | 16.92 |
| 16 | 0.025 | 0.076 | 18.06 |
| 17 | 0.025 | 0.076 | 19.20 |
| 18 | 0.025 | 0.076 | 20.35 |
| 19 | 0.025 | 0.076 | 21.49 |
| 20 | 0.025 | 0.076 | 22.64 |
| 21 | 0.025 | 0.076 | 23.78 |
| 22 | 0.025 | 0.076 | 24.93 |
| 23 | 0.025 | 0.076 | 26.07 |
| 24 | 0.025 | 0.076 | 27.20 |
| 25 | 0.025 | 0.076 | 28.27 |
| 26 | 0.025 | 0.076 | 29.38 |
| 27 | 0.025 | 0.076 | 30.53 |
| 28 | 0.025 | 0.076 | 31.67 |
| 29 | 0.025 | 0.076 | 32.81 |
| 30 | 0.025 | 0.076 | 33.96 |
| 31 | 0.025 | 0.076 | 35.10 |
| 32 | 0.025 | 0.076 | 36.25 |
| 33 | 0.025 | 0.076 | 37.38 |
| 34 | 0.025 | 0.076 | 38.52 |
| 35 | 0.025 | 0.076 | 39.68 |
| 36 | 0.025 | 0.076 | 40.83 |
| 38 | 0.025 | 0.076 | 43.11 |
| 40 | 0.025 | 0.177 | 45.32 |
| 41 | 0.025 | 0.177 | 46.45 |
| 42 | 0.025 | 0.177 | 47.59 |
| 46 | 0.025 | 0.177 | 52.12 |
| 50 | 0.025 | 0.177 | 56.65 |

NOTE:
(1) For sizes not listed, multiply nominal size by 1.133055 for mandrel dimension across corners. Applicable to mandrels over 38 mm nominal size.



Copyright ASME International
Provided by IHS under license with ASME
No reproduction or networking permitted without license from IHS
Not for Resale

Test may also be performed to certify the manufacturer's Nickel-Chromium coating process. Passing the Coating Process Qualification tests, when agreed to by the customer, exempts the manufacturer from the Nickel-Chromium thickness requirement of para. 4.7.2(a). Re-testing may be required when a significant change occurs in the process, when there is a change in the materials, or when contractually required by the customer.

**5.3.1 Test Preparation.** The quantity and condition of the sample wrenches used for the following testing shall be per the manufacturer's standard practice or as mutually agreed to by the manufacturer and the customer.

**5.3.2 Coating Process Adhesion Test.** Sample wrenches shall pass the file or grind-saw test of ASTM B 571.

**5.3.3 Coating Process Abrasion Test.** Sample wrenches shall have no base material exposed when subjected to 100 L of falling sand test of ASTM D 968 Method A.

**5.3.4 Coating Process Corrosion Test.** Sample wrenches shall be tested for corrosion resistance by exposure to a 48 hr salt spray test, as specified in ASTM B 117, without falling below the ASTM B 537 rating of 6.

## 6 DESIGNATIONS

Wrenches shall be designated by the following data in the sequence shown:

*(a)* Type
*(b)* Size of openings
*(c)* Configuration of openings
*(d)* Coating

EXAMPLE: Flare Nut Wrench Type I, $\frac{1}{2} \times \frac{9}{16}$ openings, 6-point (single hexagon), Nickel-chrome.

## 7 SAFETY REQUIREMENTS AND LIMITATIONS OF USE

Instructors and employers shall stress proper use and safety in the use of wrenches, information about which can be found in the HTI publication, Guide to Hand Tools-Selection, Safety Tips, Proper Use and Care.



Copyright ASME International
Provided by IHS under license with ASME
No reproduction or networking permitted without license from IHS
Not for Resale

## AMERICAN NATIONAL STANDARDS FOR HAND TOOLS

Socket Wrenches, Hand (Inch Series) ..... B107.1-2002
Socket Wrenches, Extensions, Adaptors, and Universal Joints, Power Drive (Impact) (Inch Series) ..... B107.2-2002
Socket Wrenches, Power Drive (Non-Impact) (Inch Series) ..... B107.3-1978(R1991)
Driving and Spindle Ends for Portable Hand, Impact, Air, and Electric Tools (Percussion Tools Excluded) ..... B107.4M-1995
Socket Wrenches, Hand (Metric Series) ..... B107.5M-1994
Adjustable Wrenches ..... B107.8M-1996
Handles and Attachments for Hand Socket Wrenches — Inch and Metric Series ..... B107.10M-1996
Pliers, Diagonal Cutting, and Nippers, End Cutting ..... B107.11M-1993
Nut Drivers (Spin Type, Screwdriver Grip) (Inch Series) ..... B107.12-1997
Pliers — Long Nose, Long Reach ..... B107.13M-1996
Hand Torque Tools ..... B107.14M-1994
Flat Tip and Phillips Screwdrivers ..... B107.15-1993
Shears (Metal Cutting, Hand) ..... B107.16M-1998
Gages, Wrench Openings, Reference ..... B107.17M-1997
Pliers (Wire Twister) ..... B107.18M-1996
Pliers, Retaining Ring ..... B107.19-1993(R1998)
Pliers (Lineman's, Iron Worker's, Gas, Glass, Fence, and Battery) ..... B107.20M-1998
Wrench, Crowfoot Attachments ..... B107.21-1998
Electronic Cutters ..... B107.22M-1998
Pliers, Multiple Position, Adjustable ..... B107.23M-1997
Pliers — Performance Test Methods ..... B107.25M-1996
Pliers, Multiple Position (Electrical Connector) ..... B107.27-1996
Electronic Torque Instruments ..... B107.28M-1997
Electronic Tester, Hand Torque Tools ..... B107.29M-1998
Screwdrivers, Cross Tip Gaging ..... B107.31M-1997
Socket Wrenches for Spark Plugs ..... B107.34M-1997
Nut Drivers (Spin Type, Screwdriver Grip) (Metric Series) ..... B107.35M-1997
Electronic Pliers ..... B107.38M-1998
Nail Hammers — Safety Requirements ..... B107.41M-1997
Hatchets: Safety Requirements ..... B107.42M-1997
Wood-Splitting Wedges: Safety Requirements ..... B107.43M-1997
Glaziers' Chisels and Wood Chisels: Safety Requirements ..... B107.44-2002
Ripping Chisels and Flooring/Electricians' Chisels: Safety Requirements ..... B107.45-2002
Stud, Screw, and Pipe Extractors: Safety Requirements ..... B107.46M-1998
Metal Chisels: Safety Requirements ..... B107.47M-1998
Metal Punches and Drift Pins: Safety Requirements ..... B107.48M-1998
Nail Sets: Safety Requirements ..... B107.49M-1998
Brick Chisels and Brick Sets: Safety Requirements ..... B107.50M-1998
Star Drills: Safety Requirements ..... B107.51-2001
Nail-Puller Bars: Safety Requirements ..... B107.52M-1998
Ball Peen Hammers: Safety Requirements ..... B107.53M-1998
Heavy Striking Tools: Safety Requirements ..... B107.54-2001
Axes: Safety Requirements ..... B107.55M-2002
Body Repair Hammers and Dolly Blocks:Safety Requirements ..... B107.56-1999
Bricklayers' Hammers and Prospecting Picks: Safety Requirements ..... B107.57-2001
Riveting, Scaling, and Tinner's Setting Hammers: Safety Requirements ..... B107.58M-1998
Slugging and Striking Wrenches ..... B107.59-2002
Wrenches ..... B107.100-2002

*The ASME Publications Catalog shows a complete list of all the Standards published by the Society. For a complimentary catalog, or the latest information about our publications, call 1-800-THE-ASME (1-800-843-2763).*

Copyright ASME International
Provided by IHS under license with ASME
No reproduction or networking permitted without license from IHS
Not for Resale

# ASME Services

ASME is committed to developing and delivering technical information. At ASME's Information Central, we make every effort to answer your questions and expedite your orders. Our representatives are ready to assist you in the following areas:

ASME Press
*Codes & Standards*
Credit Card Orders
IMechE Publications
Meetings & Conferences
Member Dues Status
Member Services & Benefits
Other ASME Programs
Payment Inquiries
Professional Development
Short Courses
Publications
Public Information
Self-Study Courses
Shipping Information
Subscriptions/Journals/Magazines
Symposia Volumes
Technical Papers

**How can you reach us? It's easier than ever!**

There are four options for making inquiries* or placing orders. Simply mail, phone, fax, or E-mail us and an Information Central representative will handle your request.

*Mail*
**ASME**
22 Law Drive, Box 2900
Fairfield, New Jersey
07007-2900

*Call Toll Free*
**US & Canada:** 800-THE-ASME
(800-843-2763)
**Mexico:** 95-800-THE-ASME
(95-800-843-2763)
**Universal:** 973-882-1167

*Fax—24 hours*
973-882-1717
973-882-5155

*E-Mail—24 hours*
Infocentral@asme.org

* Information Central staff are not permitted to answer inquiries about the technical content of this code or standard. Information as to whether or not technical inquiries are issued to this code or standard is shown on the copyright page. All technical inquiries must be submitted in writing to the staff secretary. Additional procedures for inquiries may be listed within.

Copyright ASME International
Provided by IHS under license with ASME
No reproduction or networking permitted without license from IHS
Not for Resale

ISBN 0-7918-2777-1



N16202

Copyright ASME International
Provided by IHS under license with ASME
No reproduction or networking permitted without license from IHS

Not for Resale