9999998 0016786 9T9

NOTICE OF VALIDATION

VALIDATION NOTICE 1
10 August 1993 for
ANSI/ASME B1.22M-1985(R1992)
26 September 1985

ANSI/ASME B1.22M-1985, adopted on 3 November 1987, has been reviewed and determined to be current.

Custodians:
Army - AR
Navy - AS
Air Force - 99

Review Activities:
Army - AT, AV, ME
Navy - OS
Air Force - 11

User Activities:
Army - CR, ER
Navy - SH

Military Coordinating Activity:
DLA - IS

AREA THDS

DISTRIBUTION STATEMENT A. Approved for public release; distribution is unlimited.

Copyright ASME International
Provided by IHS under license with ASME
No reproduction or networking permitted without license from IHS
Not for Resale

D-90-20
F-43-05

AN AMERICAN NATIONAL STANDARD

Gages and Gaging for MJ Series Metric Screw Threads

ANSI/ASME B1.22M - 1985

(REVISION OF ANSI B1.22-1978)

SPONSORED AND PUBLISHED BY
THE AMERICAN SOCIETY OF MECHANICAL ENGINEERS
United Engineering Center 345 East 47th Street New York, N.Y. 10017

Copyright ASME International
Provided by IHS under license with ASME
No reproduction or networking permitted without license from IHS

Not for Resale

AN AMERICAN NATIONAL STANDARD

Gages and Gaging for MJ Series Metric Screw Threads

ANSI/ASME B1.22M - 1985

(REVISION OF ANSI B1.22-1978)

SPONSORED AND PUBLISHED BY

THE AMERICAN SOCIETY OF MECHANICAL ENGINEERS

United Engineering Center 345 East 47th Street New York, N. Y. 10017

Copyright ASME International
Provided by IHS under license with ASME
No reproduction or networking permitted without license from IHS

Not for Resale

Date of Issuance: December 31, 1986

This Standard will be revised when the Society approves the issuance of a new edition. There will be no addenda or written interpretations of the requirements of this Standard issued to this Edition.

This code or standard was developed under procedures accredited as meeting the criteria for American National Standards. The Consensus Committee that approved the code or standard was balanced to assure that individuals from competent and concerned interests have had an opportunity to participate. The proposed code or standard was made available for public review and comment which provides an opportunity for additional public input from industry, academia, regulatory agencies, and the public-at-large.

ASME does not "approve," "rate," or "endorse" any item, construction, proprietary device, or activity.

ASME does not take any position with respect to the validity of any patent rights asserted in connection with any items mentioned in this document, and does not undertake to insure anyone utilizing a standard against liability for infringement of any applicable Letters Patent, nor assume any such liability. Users of a code or standard are expressly advised that determination of the validity of any such patent rights, and the risk of infringement of such rights, is entirely their own responsibility.

Participation by federal agency representative(s) or person(s) affiliated with industry is not to be interpreted as government or industry endorsement of this code or standard.

ASME accepts responsibility for only those interpretations issued in accordance with governing ASME procedures and policies which preclude the issuance of interpretations by individual volunteers.

No part of this document may be reproduced in any form,
in an electronic retrieval system or otherwise,
without the prior written permission of the publisher.

Copyright © 1986 by
THE AMERICAN SOCIETY OF MECHANICAL ENGINEERS
All Rights Reserved
Printed in U.S.A.

Copyright ASME International
Provided by IHS under license with ASME
No reproduction or networking permitted without license from IHS

Not for Resale

FOREWORD

(This Foreword is not part of ANSI/ASME B1.22M-1985.)

American National Standards Committee B1 for the standardization of screw threads was organized in 1920 as Sectional Committee B1 under the aegis of the American Engineering Standards Committee [later the American Standards Association, then the United States of America Standards Institute, and as of October 6, 1969, the American National Standards Institute, Inc. (ANSI)], with the Society of Automotive Engineers and the American Society of Mechanical Engineers as joint sponsors. As a result, a great deal of effort was expended through the years toward development of several inch screw thread standards, including the current inch gaging standard, ANSI/ASME B1.2-1983, Gages and Gaging for Unified Inch Screw Threads.

Recognizing the increasing need of industries in the United States for documentation of American gaging practice for metric screw threads, American National Standards Committee B1 charged its thread gaging Subcommittee 2 with the responsibility for producing such a standard. ANSI B1.16-1972 was developed as a standard for American gaging practice for metric screw threads; ANSI/ASME B1.16M-1984 is a revision of that standard.

With the development of the MJ series of metric screw threads, documented in ANSI B1.21, it became necessary to document the required thread gages that were not covered in the ANSI B1.16 standard. Committee B1 asked Subcommittee 2 to develop such a standard.

ANSI B1.22-1978 was developed by Subcommittee 2 to provide the essential specifications for gages and gaging practice necessary to fulfill the provisions of the product thread document ANSI B1.21, Metric Screw Threads — MJ Profile.

In 1982, Committee B1 was reorganized as the ASME Standards Committee B1, and it has operated under American Society of Mechanical Engineers procedures to produce and update standards which become ANSI Standards after final approval by the American National Standards Institute.

This publication, designated ANSI/ASME B1.22M-1985, does not have any references to conformance criteria, as Committee B1 has established B1.3M for all levels of acceptability for screw threads. A considerable amount of new material is added to cover the many options of gages and measuring equipment shown in B1.3M. Mn/Mt gages have been identified as NOT GO gages.

The proposed Standard was submitted by the ASME Board of Standardization to the American National Standards Institute. It was approved and formally designated as an American National Standard on September 26, 1985.

Copyright ASME International
Provided by IHS under license with ASME
No reproduction or networking permitted without license from IHS
Not for Resale

ASME STANDARDS COMMITTEE B1
Standardization and Unification of Screw Threads

(The following is the roster of the Committee at the time of approval of this Standard.)

OFFICERS

D. J. Emanuelli, *Chairman*
H. W. Ellison, *Vice Chairman*
C. E. Lynch, *Secretary*

COMMITTEE PERSONNEL

AEROSPACE INDUSTRIES ASSOCIATION OF AMERICA, INC.
G. G. Gerber, McDonnell Douglas, St. Louis, Missouri
H. Borrman, *Alternate*, Sperry Gyroscope Division, Great Neck, New York

AMERICAN IRON AND STEEL INSTITUTE
F. Dallas, Jr., Cyclops Corp., Sharon, Pennsylvania

AMERICAN MEASURING TOOL MANUFACTURERS ASSOCIATION
D. Dodge, Pennoyer-Dodge Co., Glendale, California
C. W. Jatho, *Alternate*, American Measuring Tool Manufacturers Association, Birmingham, Michigan

AMERICAN PIPE FITTINGS ASSOCIATION
W. C. Farrell, Jr., Stockham Valves and Fittings, Inc., Birmingham, Alabama

DEFENSE INDUSTRIAL SUPPLY CENTER
E. Schwartz, Defense Industrial Supply Center, Philadelphia, Pennsylvania
F. S. Ciccarone, *Alternate*, Defense Industrial Supply Center, Philadelphia, Pennsylvania

ENGINE MANUFACTURERS ASSOCIATION
G. A. Russ, Cummins Engine Co., Columbus, Indiana

FARM AND INDUSTRIAL EQUIPMENT INSTITUTE
J. F. Nagy, Ford Motor Co., Dearborn, Michigan

INDUSTRIAL FASTENERS INSTITUTE
R. B. Belford, Industrial Fasteners Institute, Cleveland, Ohio
R. M. Harris, Bethlehem Steel Co., Lebanon, Pennsylvania
K. E. McCullough, SPS Technologies, Inc., Jenkintown, Pennsylvania
J. C. McMurray, Russell, Burdsall and Ward, Inc., Mentor, Ohio

MANUFACTURERS STANDARDIZATION SOCIETY OF THE VALVE AND FITTINGS INDUSTRY
W. C. Farrell, Jr., Stockham Valves and Fittings, Inc., Birmingham, Alabama

METAL CUTTING TOOL INSTITUTE (TAP & DIE DIVISION)
N. F. Nau, Union/Butterfield Division, Litton Industries, Athol, Massachusetts
A. D. Shepherd, Jr., *Alternate*, Union/Butterfield Division, Litton Industries, Derby Line, Vermont

Copyright ASME International
Provided by IHS under license with ASME
No reproduction or networking permitted without license from IHS
Not for Resale

NATIONAL ELECTRICAL MANUFACTURERS ASSOCIATION
J. L. Griffin, Wheatland Tube Co., Wheatland, Pennsylvania
J. B. Levy, General Electric Co., Schenectady, New York
F. F. Weingruber, Westinghouse Electric Corp., Pittsburgh, Pennsylvania
W. Montavon, *Alternate*, National Electrical Manufacturers Association, Washington, D.C.

NATIONAL FASTENER DISTRIBUTORS ASSOCIATION
J. Sullivan, Accurate Fasteners, Inc., Boston, Massachusetts

NATIONAL MACHINE TOOL BUILDERS ASSOCIATION
R. J. Sabatos, Cleveland Twist Drill Co., Cleveland, Ohio
D. R. Stoner, Jr., Teledyne Landis Machine Co., Waynesboro, Pennsylvania

NATIONAL SCREW MACHINE PRODUCTS ASSOCIATION
T. S. Meyer, Fischer Special Manufacturing Co., Cold Spring, Kentucky
R. Zahnizer, *Alternate*, National Screw Machine Products Association, Brecksville, Ohio

SOCIETY OF AUTOMOTIVE ENGINEERS
H. W. Ellison, General Motors Corp., Warren, Michigan

SOCIETY OF MANUFACTURING ENGINEERS
D. Davidson, Morse/Hemco Corp., Holland, Michigan
L. Gibson, *Alternate*, Morse/Hemco Corp., Holland, Michigan

TUBULAR RIVET AND MACHINE INSTITUTE
R. M. Byrne, Industry Service Bureaus, Inc., White Plains, New York

U.S. DEPARTMENT OF THE ARMY
F. J. Clas, U.S. Army, Watervliet Arsenal, Watervliet, New York
J. Crowley, U.S. Army Material Development and Readiness Command, Alexandria, Virginia
F. L. Jones, *Alternate*, U.S. Army Missile Command, Redstone Arsenal, Alabama

U.S. DEPARTMENT OF DEFENSE
E. Schwartz, Defense Industrial Supply Center, Philadelphia, Pennsylvania

U.S. DEPARTMENT OF THE NAVY
C. T. Gustafson, Metrology Laboratory, Portsmouth Naval Ship Yard, Portsmouth, New Hampshire

INDIVIDUAL MEMBERS
C. T. Appleton, Jefferson, Massachusetts
J. Boehnlein, PMC Industries, Wickliffe, Ohio
A. R. Breed, Lakewood, Ohio
R. Browning, Southern Gage Co., Erin, Tennessee
A. Butovich, Air Industries Corp., Garden Grove, California
R. S. Chamerda, The Johnson Gage Co., Bloomfield, Connecticut
J. F. Cramer, Des Moines, Washington
P. Drake, Hudson, Massachusetts
E. W. Drescher, Lancaster, Pennsylvania
D. J. Emanuelli, Greenfield Tap and Die, Greenfield, Massachusetts
C. G. Erickson, Sterling Die, West Hartford, Connecticut
S. P. Johnson, The Johnson Gage Co., Bloomfield, Connecticut
S. I. Kanter, The Hanson-Whitney Co., Hartford, Connecticut
R. W. Lamport, The Van Keuren Co., Watertown, Massachusetts
A. R. Machell, Jr., Webster, New York
A. E. Masterson, Watervliet, New York
R. E. Mazzara, Geometric Tool, New Haven, Connecticut
P. V. Pastore, Regal Beloit Corp., South Beloit, Illinois
M. M. Schuster, Hi-Shear Corp., Torrance, California
A. G. Strang, Boyds, Maryland
R. Tennis, Caterpillar Tractor Co., Peoria, Illinois
A. F. Thibodeau, Swanson Tool Manufacturing, Inc., West Hartford, Connecticut
J. W. Turton, The Bendix Corp., Greenfield, Massachusetts

Copyright ASME International
Provided by IHS under license with ASME
No reproduction or networking permitted without license from IHS
Not for Resale

SUBCOMMITTEE B1.2 — SCREW THREAD GAGES AND GAGING

R. Browning, *Chairman*, Southern Gage Co., Erin, Tennessee
A. F. Thibodeau, *Secretary*, Swanson Tool Manufacturing, Inc., West Hartford, Connecticut
J.. Boehnlein, PMC Industries, Wickliffe, Ohio
D. Cadieux, Greenfield Tap and Die, Greenfield, Massachusetts
R. S. Chamerda, The Johnson Gage Co., Bloomfield, Connecticut
M. Davidson, Morse/Hemco Corp., Holland, Michigan
D. Dodge, Pennoyer-Dodge Co., Glendale, California
H. W. Ellison, General Motors Technical Center, Warren, Michigan
C. G. Erickson, Sterling Die, West Hartford, Connecticut
C. T. Gustafson, Metrology Laboratories Division, Portsmouth, New Hampshire
S. I. Kanter, The Hanson-Whitney Co., Hartford, Connecticut
R. W. Lamport, The Van Keuren Co., Watertown, Massachusetts
A. E. Masterson, Watervliet, New York
K. E. McCullough, SPS Technologies, Inc., Jenkintown, Pennsylvania
J. C. McMurray, Russell, Burdsall and Ward, Inc., Mentor, Ohio
M. M. Schuster, Hi-Shear Corp., Torrance, California
E. Schwartz, Defense Industrial Supply Center, Philadelphia, Pennsylvania
R. Seppey, Bendix Corp., South Bend, Indiana
A. G. Strang, Boyds, Maryland
J. W. Turton, The Bendix Corp., Greenfield, Massachusetts
A. Zaveruha, McMellon Brothers, Stratford, Connecticut

Copyright ASME International
Provided by IHS under license with ASME
No reproduction or networking permitted without license from IHS
Not for Resale

CONTENTS

Foreword iii
Standards Committee Roster v

1 Introduction 1
1.1 General 1
1.2 References 1
1.3 Units of Measure 1
1.4 Classification 1
1.5 Federal Government Use 1

2 Basic Principles 1
2.1 Accuracy in Gaging 1
2.2 Limitations of Gaging 1
2.3 Determining Size of Gages 10
2.4 Standard Temperature 10
2.5 Rounding Procedures 10
2.6 Identification 10

3 General Practice 10
3.1 General Design 10
3.2 Types of Gages 11
3.3 Interpretation of Tolerances 11
3.4 Direction of Tolerances on Gages 11
3.5 Standard Thread Gage Tolerances 11
3.6 Tolerance on Lead 11
3.7 Tolerances on Half-Angle 11
3.8 Check of Effect of Lead and Flank Angle Variations on Product Thread 11
3.9 Calibration Requirements and Standards 12
3.10 Surveillance 12

4 Types of Gages for Product Internal Thread 12
4.1 GO Working Thread Plug Gages 12
4.2 NOT GO Thread Plug Gages 13
4.3 Full-Form GO Thread Plug Gage 16
4.4 Thread Snap Gages — GO Segments or Rolls 18
4.5 Thread Snap Gages — NOT GO Segments or Rolls 26
4.6 Thread Snap Gages — Minimum Material: Pitch Diameter Cone and Vee 26
4.7 Thread Snap Gages — Minimum Material: Thread-Groove Diameter Type 39
4.8 Thread-Setting Solid Ring Gages 39
4.9 Plain Plug, Snap, and Indicating Gages to Check Minor Diameter of Internal Thread 40
4.10 Snap and Indicating Gages to Check Major Diameter of Internal Thread 44
4.11 Functional Indicating Thread Gages for Internal Thread 44
4.12 Minimum-Material Indicating Thread Gages for Internal Thread 47

Copyright ASME International
Provided by IHS under license with ASME
No reproduction or networking permitted without license from IHS
Not for Resale

4.13 Indicating Runout Thread Gage for Internal Thread 47
4.14 Differential Gaging 51
4.15 Cumulative Form Gaging 53
4.16 Pitch Micrometers 53
4.17 Thread-Measuring Balls 53
4.18 Optical Comparator and Toolmaker's Microscope 53
4.19 Profile Tracing Instrument 56
4.20 Surface Roughness Equipment 56
4.21 Roundness Equipment 56
4.22 Miscellaneous Gages and Gaging Equipment 56

5 Types of Gages for Product External Thread 57
5.1 GO Working Thread Ring Gages 57
5.2 Adjustable NOT GO Thread Ring Gages 58
5.3 Thread Snap Gages — GO Segments or Rolls 59
5.4 Thread Snap Gages — NOT GO Segments or Rolls 60
5.5 Thread Snap Gages — Cone and Vee 63
5.6 Thread Snap Gages — Minimum Material: Thread-Groove Diameter Type 63
5.7 Plain Ring and Snap Gages to Check Major Diameter of Product External Threads 65
5.8 Snap Gages for Minor Diameter of Product External Threads 66
5.9 Functional Indicating Thread Gages for External Thread 66
5.10 Minimum-Material Indicating Thread Gages for External Thread 68
5.11 Indicating Runout Gage for External Thread 72
5.12 Differential Gaging 72
5.13 Cumulative Form Gaging 76
5.14 W Tolerance Thread-Setting Plug Gages 76
5.15 Plain Check Plug Gages for Thread Ring Gages 79
5.16 Indicating Plain Diameter Gages — Major Diameter of Product External Threads 80
5.17 Indicating Gages to Check Minor Diameter of External Thread 80
5.18 Thread Micrometers 80
5.19 Thread-Measuring Wires 80
5.20 Optical Comparator and Toolmaker's Microscope 83
5.21 Profile Tracing Instrument 83
5.22 Electromechanical Lead Tester 83
5.23 Helical Path Attachment Used With GO Type Thread Indicating Gage 94
5.24 Helical Path Analyzer 94
5.25 Surface Roughness Equipment 94
5.26 Roundness Equipment 94
5.27 Miscellaneous Gages and Gaging Equipment 95

Figures

1 Maximum-Material GO Functional Limit 13
2 Partial End Threads and Chip Grooves 14
3 NOT GO Functional Diameter Limit 15
4 MJ Full-Form Thread Plug Gage 16
5 Thread Snap Gages — Maximum-Material GO Functional Limit 19
6 Thread Snap Gages — NOT GO Functional Diameter Limit 27
7 Thread Snap Gages — Minimum-Material Pitch Diameter Limit — Cone and Vee 28
8 Thread Snap Gages — Minimum-Material Thread-Groove Diameter Limit 40
9 Thread Form of Solid Thread-Setting Ring Gages 41

Copyright ASME International
Provided by IHS under license with ASME
No reproduction or networking permitted without license from IHS
Not for Resale

10 Minor Diameter Limit 43
11 Indicating Plain Diameter Gages — Max.-Min. Minor Diameter Limit and Size 45
12 Snap and Indicating Diameter Gages — Max.-Min. Major Diameter Limit and Size 46
13 Indicating Thread Gages — Maximum-Material GO Functional Limit and Size 48
14 Indicating Thread Gages — Minimum-Material Pitch Diameter Limit and Size — Cone and Vee 49
15 Indicating Thread Gages — Minimum-Material Pitch Diameter Limit and Size — Ball and Radius 50
16 Indicating Thread Gages — Diameter Runout — Minor to Pitch Diameter 52
17A Internal Imperfect Screw Thread 54
17B Internal Perfect Screw Thread 55
18 Inside Micrometer, Caliper Type 56
19 Maximum-Material GO Functional Limit 57
20 NOT GO Functional Diameter Limit 59
21 Thread Snap Gages — Maximum-Material GO Functional Limit 61
22 Thread Snap Gages — NOT GO Functional Diameter Limit 62
23 Thread Snap Gages — Minimum-Material Pitch Diameter Limit — Cone and Vee 64
24 Thread Snap Gages — Minimum-Material Thread-Groove Diameter Limit 65
25 Major Diameter Limit 66
26 Minor Diameter Limit, Snap Type 67
27 Indicating Thread Gages — Maximum-Material GO Functional Diameter Limit and Size 69
28 Indicating Thread Gages — Minimum-Material Pitch Diameter Limit and Size — Cone and Vee 70
29 Indicating Thread Gages — Minimum-Material Thread-Groove Diameter Limit and Size 71
30 Indicating Thread Gages — Diameter Runout — Major to Pitch Diameter 73
31A External Imperfect Screw Thread 74
31B External Perfect Screw Thread 75
32 Thread Form of Truncated Thread-Setting Plug Gages 77
33 Thread Form of Full-Form Thread-Setting Plug Gages 78
34 Indicating Plain Diameter Gages — Max.-Min. Major Diameter Limit and Size 81
35 Indicating Diameter Gages — Max.-Min. Minor Diameter Limit and Size 82
36 Indicating Gages — Helical Path Attachment Used With GO Type Indicating Gage 94

Tables

1 Screw Thread Gages and Measuring Equipment for External Product Thread Characteristics 2
2 Screw Thread Gages and Measuring Equipment for Internal Product Thread Characteristics 6
3 Recommended Widths for Chip Grooves 14
4 Thread Data, MJ Full-Form Thread Gages 17
5 Gages for Standard Thread Series Metric MJ Screw Threads — Limits of Size 20
6 Setting Gages for Standard Series Metric MJ Screw Threads — Limits of Size 29

Copyright ASME International
Provided by IHS under license with ASME
No reproduction or networking permitted without license from IHS
Not for Resale

7 Specifications and Format for Table 5 — Limits of Size of Threaded and Plain Gages for Metric MJ External and Internal Threads 36
8 Specifications and Format for Table 6 — Limits of Size of Thread-Setting Gages for Metric MJ Thread-Working Gages 37
9 X Gage Tolerances for Thread Gages 38
10 W Gage Tolerances for Thread Gages 42
11 Gage Tolerances for Plain Cylindrical Gages 44
12 Constants for Computing Thread Gage Dimensions 84
13 Calibration Requirements and Standards for X Tolerance Thread Gages, Indicating Gages, Plain Gages, and Measuring Equipment for External Product Threads 85
14 Calibration Requirements and Standards for X Tolerance Thread Gages, Indicating Gages, Plain Gages, and Measuring Equipment for Internal Product Threads 90
15 Calibration Requirements for Thread- and Plain-Setting Gages 93

Appendices

A Calibration and Inspection of Limit Gages, Snap Gages, Indicating Gages, and Measuring Instruments 97
A1 General 97
A2 Thread Plug Gage Calibration 97
A3 Thread Ring Gage Inspection 98
A4 Plain Plug Gage Calibration 100
A5 Plain Ring Gage Calibration 101
A6 Plain Snap Gages 101
A7 Rolls With Zero Lead Thread Form Used on Snap and Indicating Gages 101
A8 Inspecting Peripheral Contacting Segments on Indicating Gages 101
A9 Check for Magnification Discrepancies Due to Indicating System Linkage 103
A10 Calibration of Dial and Electronic Indicators 103
A11 Assessment of Surface Quality 103

B Metrology of 60 deg. Screw Threads 105
B1 Wire Method of Measurement of Pitch Diameter (Thread-Groove Diameter) 105
B2 Size of Wires 105
B3 Methods of Measuring Wires Considering the Effect of Deformation 105
B4 Methods of Measurement Using Wires 108
B5 Standard Specification for Wires and Standard Practice in Measurement of Wires of 60 deg. Threads 108
B6 General Formula for Measurement of Pitch Diameter 109
B7 Simplified Formula for Pitch Diameter 109
B8 Setting Measuring Instruments With Variable Measuring Force 110
B9 Thread Balls 110
B10 Internal Pitch Diameter Measurement 110

C Metric Tables for Gage Lengths 111

D Customary Equivalents 113

E Thread Diameter Adjustment Due to Temperature Variation 135
E1 Scope 135
E2 Thread Diameter Adjustment for Temperatures Above and Below Standard 135

Copyright ASME International
Provided by IHS under license with ASME
No reproduction or networking permitted without license from IHS
Not for Resale

Figure

B1 A Three-Wire Method of Measuring Pitch (Thread-Groove) Diameter of Thread Plug Gages 106

Tables

A1 Minimum Magnification 98
A2 60 deg. Included Thread Angle 99
B1 Metric Thread-Measuring Wires for 60 deg. Screw Threads 107
B2 Measuring Force for Over-Wire Measurements of External Pitch Diameter and Wire Calibration, and Cylindrical Diameter for Wire Calibration 107
B3 Measuring Force Over Balls for Internal Pitch Diameter Measurement and Ball Calibration 110
C1 Metric Lengths of AGD Thread Ring Gage Blanks and Total Thread Lengths of Standard Truncated Setting Plug Gage Blanks (SI) Selected From ANSI/ASME B47.1aM 111
C2 Metric Lengths of Taperlock and Trilock Thread Plug Gage Blanks (SI) Selected From ANSI/ASME B47.1aM 112
D1 Thread Data, MJ Thread Gages (Customary) 114
D2 X Gage Tolerances for Thread Gages (Customary) 115
D3 W Gage Tolerances for Thread Gages (Customary) 116
D4 Gage Tolerances for Plain Cylindrical Gages (Customary) 117
D5 Lengths of Taperlock and Trilock Thread Plug Gage Blanks Selected From ANSI/ASME B47.1aM (Customary) 118
D6 Lengths of Thread Ring Gage Blanks and Total Thread Lengths of Standard Truncated Setting Plug Gage Blanks Selected From ANSI/ASME B47.1aM (Customary) 119
D7 Setting Gages for Standard Series Metric MJ Screw Threads — Limits of Size (Customary) 120
D8 Gages for Standard Thread Series Metric MJ Screw Threads — Limits of Size (Customary) 127
D9 Metric Thread-Measuring Wires for 60 deg. Screw Threads (Customary) 133

Copyright ASME International
Provided by IHS under license with ASME
No reproduction or networking permitted without license from IHS
Not for Resale

ANSI/ASME B1.22M-1985
AN AMERICAN NATIONAL STANDARD

AN AMERICAN NATIONAL STANDARD

GAGES AND GAGING FOR MJ SERIES METRIC SCREW THREADS

1 INTRODUCTION

1.1 General

This Standard provides essential specifications and dimensions for the gages used on MJ series metric screw threads, and covers the specifications and dimensions for the thread gages and measuring equipment listed in Tables 1 and 2. The basic purpose and use of each gage are also described.

For easy reference, customary conversion of metric tables has been incorporated in Appendix D. The Appendices contain useful information that is supplementary to the sections of this Standard.

1.2 References

The latest editions of the following documents form a part of this Standard to the extent specified herein.

American National Standards

ANSI/ASME B1.2
Gages and Gaging for Unified Inch Screw Threads

ANSI/ASME B1.3M
Screw Thread Gaging Systems for Dimensional Acceptability — Inch and Metric Screw Threads (UN, UNR, UNJ, M, and MJ)

ANSI/ASME B1.7M
Nomenclature, Definitions, and Letter Symbols for Screw Threads

ANSI/ASME B1.16M
Gages and Gaging for Metric M Screw Threads

ANSI/ASME B1.21M
Metric Screw Threads — MJ Profile

ANSI/ASME B46.1
Surface Texture (Surface Roughness, Waviness, and Lay)

ANSI/ASME B47.1aM
Gage Blanks (Metric Translation of ANSI B47.1)

ANSI/ASME B89.1.6M
Measurement of Qualified Plain Internal Diameters for Use as Master Rings and Ring Gages

ANSI/ASME B89.1.9M
Precision Inch Gage Blocks for Length Measurement (Through 20 Inches and 500 mm)

ANSI/ASME B89.3.1
Measurement of Out-of-Roundness

International Standard

ISO 1502
General Purpose Metric Screw Threads — Gaging

1.3 Units of Measure

All dimensions in this Standard, including tables, are expressed in millimeters (mm) unless otherwise specified.

1.4 Classification

In this Standard the term NOT GO, previously known as Mn/Mt (for Maximum Material), is used to identify functional diameter thread gages.

1.5 Federal Government Use

When this Standard is approved by the Department of Defense and federal agencies and is incorporated into FED-STD-H28/22, Screw Thread Standard for Federal Services, Section 22, the use of this Standard by the federal government will be subject to all requirements and limitations of FED-STD-H28/22.

2 BASIC PRINCIPLES

2.1 Accuracy in Gaging

Thread plug gages are controlled by direct measuring methods. Thread ring gages, thread snap limit gages, and indicating thread gages are controlled by reference to the appropriate setting gages and/or direct measuring methods.

2.2 Limitations of Gaging

2.2.1 Product threads accepted by a gage of one type may be verified by other types. It is possible, however, that parts which are near a limit may be accepted by one type and rejected by another. Also, it is possible for two individual limit gages of the same type to be at

Copyright ASME International
Provided by IHS under license with ASME
No reproduction or networking permitted without license from IHS
Not for Resale

TABLE 1 SCREW THREAD GAGES AND MEASURING EQUIPMENT FOR EXTERNAL PRODUCT THREAD CHARACTERISTICS

Thread Gages and Measuring Equipment	Metric MJ							
	Maximum Material GO		NOT GO Functional Diameter		Minimum Material Pitch Diameter		Minimum Material Thread-Groove Diameter	
	Func. Limit	Func. Size	Func. Limit	Func. Size	Limit	Size	Limit	Size
	A_1	A_2	B_1	B_2	C_1	C_2	D_1	D_2
1 Split or Solid Threaded Rings (ANSI/ASME B47.1aM) 1.1 GO	•							
1.2 NOT GO			•					
2 Thread Snap Gages 2.1 GO segments	•							
2.2 NOT GO segments			•					
2.3 GO rolls	•							
2.4 NOT GO rolls			•					
2.5 Minimum-material — pitch diameter type — cone and vee					•			
2.6 Minimum-material — thread-groove diameter type — cone only							•	
3 Plain Diameter Gages 3.1 (a) Maximum GO plain cylindrical rings for major diameter (b) Minimum NOT GO plain cylindrical rings for major diameter								
3.2 Major diameter snap type								
3.3 Minor diameter snap type								
3.4 Maximum and minimum major diameter snap type								
3.5 Maximum and minimum minor diameter snap type								
4 Indicating Thread Gages Having either two contacts at 180 deg. or three contacts at 120 deg. 4.1 GO segments	•	•	•	•				
4.3 GO rolls	•	•	•	•				
4.5 Minimum-material — pitch diameter type — cone and vee					•	•		
4.6 Minimum-material — thread-groove diameter type — cone only							•	•

Copyright ASME International
Provided by IHS under license with ASME
No reproduction or networking permitted without license from IHS

Not for Resale

TABLE 1 SCREW THREAD GAGES AND MEASURING EQUIPMENT FOR EXTERNAL PRODUCT THREAD CHARACTERISTICS

Metric MJ

Roundness of Pitch Cylinder				Taper of Pitch Cylinder		Lead Incl. Helix Variation	Flank Angle Variation	Major Diameter		Minor Diameter		Root Rad.	Diam. Runout Major to Pitch	Surface Texture
Oval 180 deg.		Multilobe 120 deg.												
Limit	Size	Limit	Size	Limit	Size			Limit	Size	Limit	Size			
E_1	E_2	F_1	F_2	G_1	G_2	H	I	J_1	J_2	K_1	K_2	L	M	N
										[Note (1)]				
•										[Note (1)]				
•				•										
•										[Note (1)]				
•				•										
•				•										
								•						
								•						
										•				
								•						
										•				
•	•	•	•							[Note (1)]				
•	•	•	•							[Note (1)]				
•	•	•	•	•	•									
•	•	•	•	•	•									

Copyright ASME International
Provided by IHS under license with ASME
No reproduction or networking permitted without license from IHS

Not for Resale

TABLE 1 SCREW THREAD GAGES AND MEASURING EQUIPMENT FOR EXTERNAL PRODUCT THREAD CHARACTERISTICS (CONT'D)

Thread Gages and Measuring Equipment	Metric MJ							
	Maximum Material		NOT GO Functional Diameter		Minimum Material			
	GO				Pitch Diameter		Thread-Groove Diameter	
	Func. Limit	Func. Size	Func. Limit	Func. Size	Limit	Size	Limit	Size
	A_1	A_2	B_1	B_2	C_1	C_2	D_1	D_2
4.7 Major diameter and pitch diameter runout gage								
4.8 Differential segment or roll (GO profile for one pitch in length) Used in combination with a GO indicating gage to yield a diameter equivalent for variation in lead (including uniformity of helix) and flank angle								
4.10 Cumulative form gaging Maximum-material and minimum-material dimensions collectively establish cumulative form within limits defined in Tables 5 and 6								
5 Indicating Plain Diameter Gages 5.1 Major diameter type								
5.2 Minor diameter type								
6 Pitch Micrometer With Standard Contacts (Approximately NOT GO Profile) Cone and Vee			•	•				
7 Pitch Micrometer With Modified Contacts (Approximately Pitch Diameter Contact) Cone and Vee					•	•		
8 Thread-Measuring Wires With Suitable Measuring Means							•	•
9 Optical Comparator and Toolmaker's Microscope With Suitable Fixturing					•	•		
10 Profile Tracing Equipment With Suitable Fixturing								
11 Lead Measuring Machine With Suitable Fixturing								
12 Helical Path Attachment Used With GO Type Indicating Gage								
13 Helical Path Analyzer								
14 Plain Micrometer and Calipers — Modified As Required								
15 Surface Measuring Equipment								
16 Roundness Equipment								

Copyright ASME International
Provided by IHS under license with ASME
No reproduction or networking permitted without license from IHS

Not for Resale

TABLE 1 SCREW THREAD GAGES AND MEASURING EQUIPMENT FOR EXTERNAL PRODUCT THREAD CHARACTERISTICS (CONT'D)

Metric MJ

Roundness of Pitch Cylinder				Taper of Pitch Cylinder		Lead Incl. Helix Variation	Flank Angle Variation	Major Diameter		Minor Diameter		Root Rad.	Diam. Runout Major to Pitch	Surface Texture
Oval 180 deg.		Multilobe 120 deg.												
Limit	Size	Limit	Size	Limit	Size			Limit	Size	Limit	Size			
E_1	E_2	F_1	F_2	G_1	G_2	H	I	J_1	J_2	K_1	K_2	L	M	N
													•	
•	•	•	•	•	•	•	•							
← Cumulative form →														
								•	•					
										•	•			
•	•			•	•									
•	•			•	•									
•	•			•	•									
•	•	•	•			•	•	•	•	•	•	•	•	
							•					•		•
						•								
						•								
						•								
								•	•					
														•
•	•	•	•											

NOTE:
(1) Maximum minor diameter limit is acceptable when product passes GO gage on MJ thread if root contour requirements are satisfied.

Copyright ASME International
Provided by IHS under license with ASME
No reproduction or networking permitted without license from IHS
Not for Resale

TABLE 2 SCREW THREAD GAGES AND MEASURING EQUIPMENT FOR INTERNAL PRODUCT THREAD CHARACTERISTICS

Thread Gages and Measuring Equipment	Metric MJ							
	Maximum Material GO		NOT GO Functional Diameter		Minimum Material			
					Pitch Diameter		Thread-Groove Diameter	
	Func. Limit	Func. Size	Func. Limit	Func. Size	Limit	Size	Limit	Size
	A_1	A_2	B_1	B_2	C_1	C_2	D_1	D_2
1 Thread Plugs (ANSI/ASME B47.1aM) 1.1 GO	•							
1.2 NOT GO			•					
1.3 Full form	•							
2 Thread Snap Gages 2.1 GO segments	•							
2.2 NOT GO segments			•					
2.3 GO rolls	•							
2.4 NOT GO rolls			•					
2.5 Minimum-material — pitch diameter type — cone and vee					•			
2.6 Minimum-material — thread-groove diameter type — cone only							•	
3 Plain Diameter Gages 3.1 (a) Minimum GO plain cylindrical plugs for minor diameter (b) Maximum NOT GO plain cylindrical plugs for minor diameter								
3.2 Major diameter snap type								
3.3 Minor diameter snap type								
3.4 Maximum and minimum major diameter snap type								
3.5 Maximum and minimum minor diameter snap type								
4 Indicating Thread Gages Having either two contacts at 180 deg. or three contacts at 120 deg. 4.1 GO segments	•	•	•	•				
4.3 GO rolls	•	•	•	•				

Copyright ASME International
Provided by IHS under license with ASME
No reproduction or networking permitted without license from IHS
Not for Resale

TABLE 2 SCREW THREAD GAGES AND MEASURING EQUIPMENT FOR INTERNAL PRODUCT THREAD CHARACTERISTICS

Metric MJ

Roundness of Pitch Cylinder				Taper of Pitch Cylinder		Lead Incl. Helix Variation	Flank Angle Variation	Major Diameter		Minor Diameter		Root Rad.	Diam. Runout Minor to Pitch	Surface Texture
Oval 180 deg.		Multilobe 120 deg.												
Limit	Size	Limit	Size	Limit	Size			Limit	Size	Limit	Size			
E_1	E_2	F_1	F_2	G_1	G_2	H	I	J_1	J_2	K_1	K_2	L	M	N
								[Note (1)]						
								[Note (1)]		•				
•								[Note (1)]						
•				•										
•								[Note (1)]						
•				•										
•				•										
•				•										
										•				
										•				
								•						
										•				
										•				
•	•	•	•					[Note (1)]						
•	•	•	•					[Note (1)]						

Copyright ASME International
Provided by IHS under license with ASME
No reproduction or networking permitted without license from IHS

Not for Resale

TABLE 2 SCREW THREAD GAGES AND MEASURING EQUIPMENT FOR INTERNAL PRODUCT THREAD CHARACTERISTICS (CONT'D)

Thread Gages and Measuring Equipment	Metric MJ							
	Maximum Material		NOT GO Functional Diameter		Minimum Material			
	GO				Pitch Diameter		Thread-Groove Diameter	
	Func. Limit	Func. Size	Func. Limit	Func. Size	Limit	Size	Limit	Size
	A_1	A_2	B_1	B_2	C_1	C_2	D_1	D_2
4.5 Minimum-material — pitch diameter type — cone and vee					•	•		
4.6 Minimum-material — thread-groove diameter type — cone only							•	•
4.7 Minor diameter and pitch diameter runout gage								
4.8 Differential segment or roll (GO profile for one pitch in length) Used in combination with a GO indicating gage to yield a diameter equivalent for variation in lead (including uniformity of helix) and flank angle								
4.10 Cumulative form gaging Maximum-material and minimum-material dimensions collectively establish cumulative form within limits defined in Tables 5 and 6								
5 Indicating Plain Diameter Gages 5.1 Major diameter type								
5.2 Minor diameter type								
6 Pitch Micrometer With Standard Contacts (Approximately NOT GO Profile) Cone and Vee			•	•				
7 Pitch Micrometer With Modified Contacts (Approximately Pitch Diameter Contact) Cone and Vee					•	•		
8 Thread-Measuring Balls With Suitable Measuring Means							•	•
9 Optical Comparator and Toolmaker's Microscope With Suitable Fixturing and Cast Replica					•	•		
10 Profile Tracing Equipment With Suitable Fixturing								
13 Plain Micrometer and Calipers — Modified as Required								
14 Surface Measuring Equipment								
15 Roundness Equipment								

Copyright ASME International
Provided by IHS under license with ASME
No reproduction or networking permitted without license from IHS
Not for Resale

TABLE 2 SCREW THREAD GAGES AND MEASURING EQUIPMENT FOR INTERNAL PRODUCT THREAD CHARACTERISTICS (CONT'D)

Metric MJ

Roundness of Pitch Cylinder				Taper of Pitch Cylinder		Lead Incl. Helix Variation	Flank Angle Variation	Major Diameter		Minor Diameter		Root Rad.	Diam. Runout Minor to Pitch	Surface Texture
Oval 180 deg.		Multilobe 120 deg.												
Limit	Size	Limit	Size	Limit	Size			Limit	Size	Limit	Size			
E_1	E_2	F_1	F_2	G_1	G_2	H	I	J_1	J_2	K_1	K_2	L	M	N
•	•	•	•	•	•									
•	•	•	•	•	•									
													•	
•	•	•	•	•	•	•	•							
← Cumulative form →														
								•	•					
										•	•			
•	•			•	•									
•	•			•	•									
•	•			•	•									
						•	•	•	•		•	•		
							•					•		•
								•	•	•	•			
														•
•	•	•	•											

NOTE:
(1) Minimum major diameter limit is acceptable when product passes GO or full-form gage.

Copyright ASME International
Provided by IHS under license with ASME
No reproduction or networking permitted without license from IHS
Not for Resale

the opposite extremes of the gage tolerances permitted, and borderline product threads accepted by one gage could be rejected by another. For these reasons, a product screw thread is considered acceptable when it passes a test by any of the permissible gages in ANSI/ASME B1.3M for the gaging system specified, provided the gage being used is within the tolerances specified in this Standard.

2.2.2 When economics and technical problems are encountered in gaging relatively large-diameter product threads, the producer and user should agree on the method and equipment used.

2.2.3 Indicating gages for internal threads smaller than 3 mm are not available.

2.3 Determining Size of Gages

2.3.1 Measuring Pitch Diameter. The three-wire method of determining pitch diameter size of thread plug gages is standard for gages in this Standard. Refer to Appendix B.

2.3.2 Size limit adjustments of thread ring and external thread snap gages are determined by their fit on their respective calibrated setting plugs. Indicating gages and thread gages for product external threads are controlled by reference to appropriate calibrated setting plugs.

2.3.3 Size limit adjustments of internal thread snap gages are determined by their fit on their respective calibrated setting rings. Indicating gages and other adjustable thread gages for product internal threads are controlled by reference to appropriate calibrated setting rings or by direct measurement.

2.4 Standard Temperature

2.4.1 The standard temperature used internationally for linear measurements is 20°C (68°F). Nominal dimensions of gages and product as specified and actual dimensions as measured shall be within specified limits at this temperature. For screw-thread gaging, the acceptable tolerance on the standard temperature is ±1°C (±2°F).

2.4.2 Since product threads are frequently checked at temperatures which are not controlled, it is desirable that the coefficient of the thermal expansion of gages be the same as that of the product on which they are used. Inasmuch as the majority of threaded product consists of iron or steel and screw-thread gages are ordinarily made of hardened steel, this condition is usually fulfilled without special attention, provided thread gages and product have stabilized to the same temperature. When the materials of the product thread and the gage are dissimilar, the differing thermal coefficients can cause serious complications and must be taken into account unless both product and gage are at temperature:

(*a*) 20°C ±2°C (68°F ±4°F) for 25 mm size and smaller;

(*b*) 20°C ±1°C (68°F ±2°F) for sizes above 25 mm to 75 mm;

(*c*) 20°C ±0.5°C (68°F ±1°F) for sizes above 75 mm to 150 mm at the time of gaging.

See Appendix E covering temperature corrections for various materials.

2.5 Rounding Procedures

2.5.1 Rounding Procedure for Converting Metric Gage Values to Inch Gage Values. Determine metric gage dimensions from gage specifications. Calculate the inch gage size by dividing the metric gage size (given to three decimal places) by 25.4. Round to five decimal places by the following method. When the first digit discarded is less than 5, the last digit retained should not be changed. If the first discarded digit is greater than 5, or if it is a 5 followed by at least one digit other than 0, the last figure retained should be increased by one unit. If the first discarded digit is a 5 followed by only zeros, the last digit retained should be rounded upward if it is an odd number, but not changed if it is an even number. Metric dimensions are official values, and all inch tables shown in Appendix D are for reference only.

EXAMPLES OF ROUNDING:

6.437243782 is rounded to 6.43724
6.437246643 is rounded to 6.43725
6.437245001 is rounded to 6.43725
6.437255000 is rounded to 6.43726
6.437245000 is rounded to 6.43724

2.6 Identification

Thread gages which are used interchangeably for regular metric M as well as MJ series metric screw threads and which are made to ANSI/ASME B1.16M may be marked to specifications in that standard.

3 GENERAL PRACTICE

3.1 General Design

The design of gages is specified only to the extent that it affects the results obtained in the gaging of product threads. Moreover, to serve their intended purposes satisfactorily, thread gages should be produced by the latest and best manufacturing techniques. The type of steel or

Copyright ASME International
Provided by IHS under license with ASME
No reproduction or networking permitted without license from IHS

Not for Resale

wear-resistant material selected, together with the heat-treating and stabilization processes, should provide wear life and dimensional stability. Thread gaging elements should be precisely manufactured to assure adequate refinement of surface texture, prevention or elimination of amorphous or smear metal, and uniformity of thread form over the entire length of the gaging member.

3.2 Types of Gages

GO thread gages check either the maximum-material limit or size to assure interchangeable assembly. NOT GO thread gages inspect the NOT GO functional diameter limit.

GO and NOT GO plain cylindrical plug or ring gages and snap or indicating gages check the limit or size of the minor diameter of product internal threads and the major diameter of product external threads, respectively.

3.3 Interpretation of Tolerances

Tolerances on lead, half-angle, and pitch diameter are variations which may be taken independently for each of these elements and may be taken to the extent allowed by respective tabulated dimensional limits. The tabulated tolerance on any one element must not be exceeded even though variations in the other two elements are smaller than the respective tabulated tolerances.

3.4 Direction of Tolerances on Gages

At the maximum-material limit (GO), the dimensions of all gages used for final conformance gaging are within the limits of size of the product thread. At the functional diameter limit, using NOT GO gages, the standard practice is to have the gage tolerance within the limits of size of the product thread. Specifications for gage limits are listed in Tables 7 and 8.

3.5 Standard Thread Gage Tolerances

Standard tolerances for thread-working gages, thread-setting plugs, and setting rings are as follows:

(*a*) W tolerances, shown in Table 10, represent the highest commercial grade of accuracy and workmanship and are specified for thread-setting gages;

(*b*) X tolerances, shown in Table 9, are larger than W tolerances and are used for product inspection gages.

Unless otherwise specified, all thread gages and gaging contacts which directly check the product thread shall be X tolerance.

3.6 Tolerance on Lead

The cumulative effect of progressive or erratic helix variation and thick or thin end thread variation is specified as an allowable variation between any two threads not farther apart than the length of the standard taperlock or trilock gage shown in ANSI/ASME B47.1aM. In the case of setting plugs, the specified tolerance shall be applicable to the thread length in the mating ring gage or nine pitches, whichever is smaller. For setting rings, the tolerance applies to a thread length of three pitches. The tolerance on lead establishes the width of a zone, measured parallel to the axis of the thread, within which the actual helical path must lie for the specified length of the thread. Measurements will be taken from a fixed reference point located at the start of the first full thread to a sufficient number of positions along the entire helix to detect all types of lead variations. The amounts that these positions vary from their basic (theoretical) positions will be recorded with due respect to sign. The greatest variation in each direction, plus or minus (±), will be selected and the sum of their values, *disregarding sign*, shall not exceed the specified tolerance. If the variations are all in one direction, the maximum value governs conformance. In the case of truncated setting plugs, the lead variations present on the full-form portion and the truncated portion of an individual gage shall not differ from each other by more than 0.003 mm over any portion equivalent to the length of the thread ring gage, or nine pitches, whichever is less. (When linear lead and drunkenness are measured as individual elements and the sum of these does not exceed the tolerance specified, the gage is well within tolerance.)

3.7 Tolerances on Half-Angle

Tolerances are specified for the half-angle rather than the included angle to assure that the bisector of the included angle will be perpendicular to the axis of the thread within proper limits. The equivalent of the variation from the true thread form caused by such irregularities as convex, concave, or wavy flanks, rounded crests, or slight projections on the thread form shall not exceed the tolerance permitted on half-angle.

3.8 Check of Effect of Lead and Flank Angle Variations on Product Thread

When this check is specified, there are two general methods available for the inspection procedures involved.

(*a*) *Direct Measurement of Lead and Half-Angle of Flanks.* The lead and flank angles of the product thread may be measured by means of available measuring

Copyright ASME International
Provided by IHS under license with ASME
No reproduction or networking permitted without license from IHS
Not for Resale

equipment such as projection comparators, measuring microscopes, graduated cone points, lead measuring machines, helix variation measuring machines, thread flank charting equipment, etc. Diameter equivalents of such variations from nominal may be calculated. Each 0.0025 mm variation in lead amounts to a 0.0043 mm (1.732 × 0.0025) increase in functional pitch diameter on external threads or a decrease in functional pitch diameter on internal threads for 60 deg. screw threads. The tangent of half-angle variation times $1.5P$ equals the approximate maximum change in functional pitch diameter with equal half-angle variations.

(*b*) *Differential Gaging Utilizing Indicating Thread Gages.* See Sections 4 and 5 for explanation and illustration of differential gaging for internal and external threads.

3.9 Calibration Requirements and Standards

Calibration requirements and standards for X tolerance thread gages, snap gages, indicating gages, Z tolerance plain gages, and measuring instruments are given in Table 13 for external product threads, in Table 14 for internal product threads, and in Table 15 for setting gages. See Appendix A for the method of calibrating and inspecting gages.

3.10 Surveillance

Gages are subject to wear and may be damaged in use. Periodic rechecking and surveillance is a necessary precaution to assure product thread conformance. Gages should also be rechecked immediately after accidents such as dropping the gage or hitting a hard surface.

4 TYPES OF GAGES FOR PRODUCT INTERNAL THREAD

4.1 GO Working Thread Plug Gages (Table 2 — Gage 1.1)

4.1.1 Purpose and Use. The GO thread plug gage inspects the maximum-material GO functional limit A_1 of product internal thread. The GO thread gage represents the maximum-material GO functional limit of the product internal thread, and its purpose is to assure interchangeable assembly of maximum-material mating parts. Go thread plug gages must enter and pass through the full threaded length of the product freely. The GO thread plug gage is a cumulative check of all thread elements except the minor diameter.

4.1.2 Basic Design. The maximum-material limit on the GO thread plug gage is made to the prescribed maximum-material limit of the product internal thread, and the gaging length is equal to the length of the gaging plug.

4.1.3 Gage Blanks. For practical and economic reasons, the design and lengths of the gaging plug members have been standardized for various size ranges and pitches (see ANSI/ASME B47.1aM or Table C2).

4.1.4 Thread Form. The specifications for thread form are summarized in Table 7 and Fig. 1.

4.1.5 Thread Crests. The major diameter of the GO thread plug gage shall be the same as the minimum major diameter of the product internal thread, with a plus gage tolerance. The thread crests shall be flat in an axial section and parallel to the axis.

4.1.6 Thread Roots. The minor diameter of the GO thread plug gage shall be cleared beyond a $P/8$ width of flat either by an extension of the sides of the thread toward a sharp vee or by an undercut no greater than $P/8$ maximum width and approximately central.

4.1.7 Runout of Pitch and Major Cylinders. On thread plug gages an eccentric condition produces an oversize effective major diameter, having a width of flat less than $P/8$, which may encroach on the minimum permissible limit for the root profile of the product internal thread. The permissible maximum effective major diameter, as determined by adding the measurement of runout (full-indicator movement), shall not exceed the maximum major diameter specified. *Runout* is the ratio of the pitch cylinder to the major diameter.

4.1.8 Pitch Cylinder. The pitch cylinder shall be round and straight within the gage pitch diameter limits specified.

4.1.9 Lead and Half-Angle Variations. Lead and half-angle variations shall be within the limits specified (see Table 9).

4.1.10 Incomplete Thread. The feather edge at both ends of the threaded section of the gaging member shall be removed. On pitches coarser than 0.8 mm, one complete thread ±¼ turn of the end threads shall be removed to obtain a full-thread-form blunt start (see Fig. 2). On pitches 0.8 mm and finer, a 60 deg. chamfer from the axis of the gage is acceptable in lieu of the blunt start.

4.1.11 Chip Grooves. Each GO thread plug gage, except in sizes MJ4 and smaller, shall be provided with a chip groove at the entering end. On reversible gages, a chip groove shall be provided at each end. Acceptable chip grooves are in accordance with commercial practice, such as a groove cut at an angle with the axis or

Copyright ASME International
Provided by IHS under license with ASME
No reproduction or networking permitted without license from IHS
Not for Resale

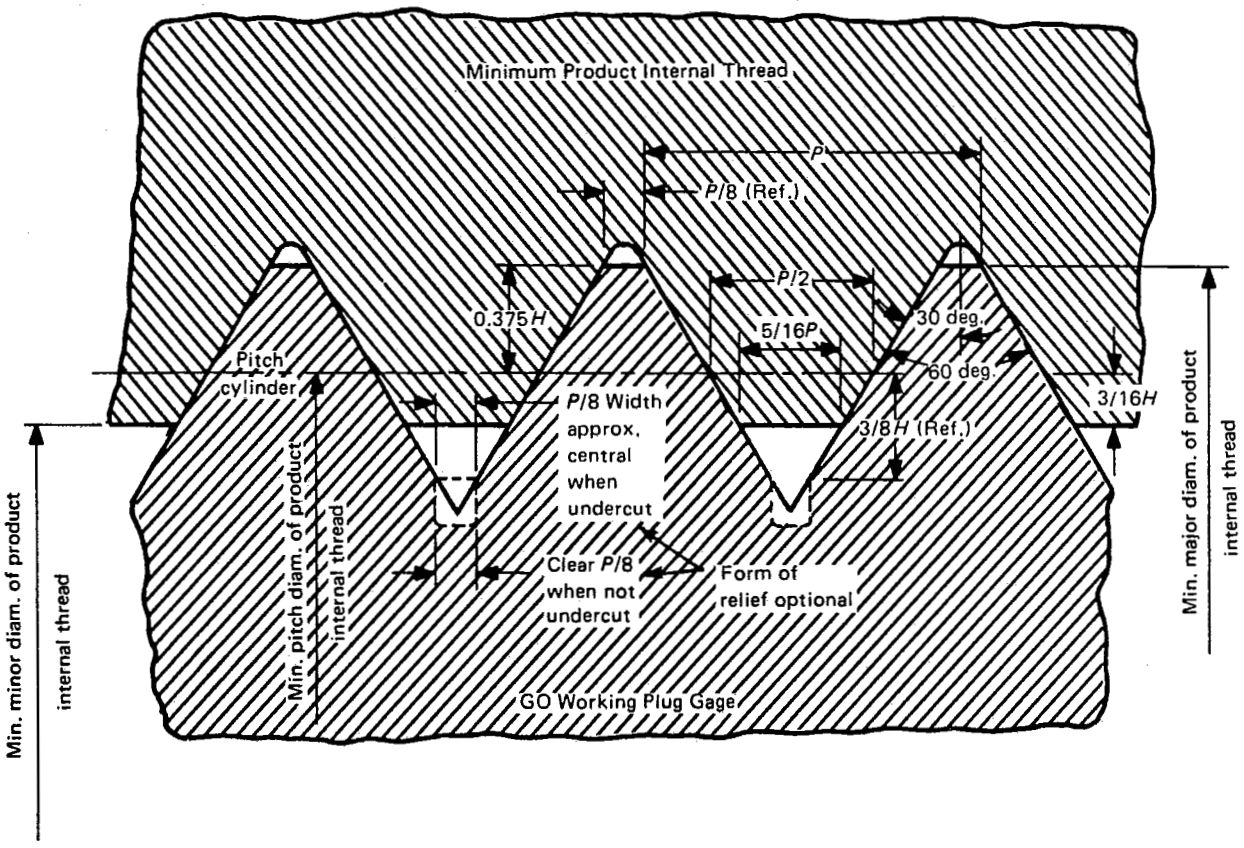

FIG. 1 MAXIMUM-MATERIAL GO FUNCTIONAL LIMIT (Ref. Table 2 — Column A_1)

a longitudinal groove cut parallel with the axis and extending the complete length of the gaging member. The groove shall be located circumferentially at the start of the full thread, and in all cases the depth shall extend below the root of the first full thread. The distance from the major diameter of the thread plug to the crest of the convolution rise in front of the chip groove, due to the radius of the convoluting tool, shall be a minimum of $H/2$ as shown in Fig. 2. The beginning of the first thread shall be of full form. The recommended widths for chip grooves are as shown in Table 3.

4.1.12 Identification. The GO thread plugs should be marked with the metric nominal size, ×, pitch-tolerance class, GO, PD, and pitch diameter in millimeters. (If PD is basic size, tolerance class may be eliminated.)

EXAMPLE:

MJ8×1-4H5H GO PD7.350

ANSI/ASME B1.16M GO thread plugs are interchangeable with MJ thread gages for the same class of thread.

4.2 NOT GO Thread Plug Gages (Table 2 — Gage 1.2)

4.2.1 Purpose and Use. The NOT GO thread plug gage inspects the NOT GO functional diameter limit B_1 of product internal thread. The NOT GO thread plug gage represents the NOT GO functional diameter limit of the product internal thread. Thread plug gages when applied to the product internal thread may engage only the end threads (which may not be representative of the complete thread). Entering threads on product are incomplete and permit gage to start. Starting threads on NOT GO plugs are subject to greater wear than the remaining threads. Such wear in combination with the in-

Copyright ASME International
Provided by IHS under license with ASME
No reproduction or networking permitted without license from IHS
Not for Resale

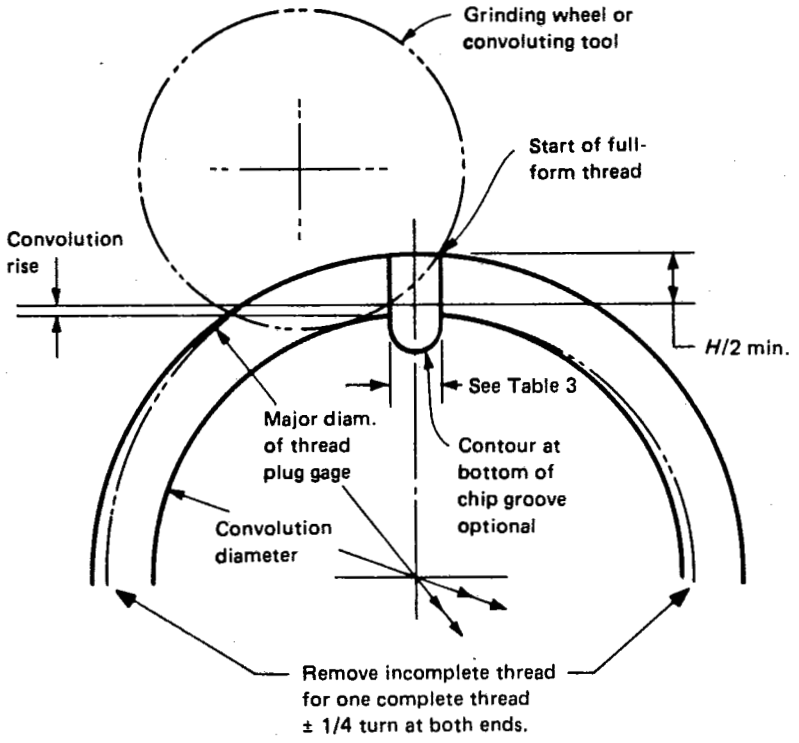

FIG. 2 PARTIAL END THREADS AND CHIP GROOVES

TABLE 3 RECOMMENDED WIDTHS FOR CHIP GROOVES

Nominal Diameter, mm	Chip Groove Width, mm	
	Max.	Min.
MJ4 and smaller	No chip groove required	
Over MJ4 to MJ5, inclusive	0.91	0.66
Over MJ5 to MJ10, inclusive	1.32	1.07
Over MJ10 to MJ12, inclusive	1.70	1.45
Over MJ12 to MJ24, inclusive	2.11	1.70
Over MJ24 to MJ39, inclusive	3.30	1.70
Over MJ39	4.90	1.70

complete product threads permits further entry of the gage. The NOT GO functional diameter limit is acceptable when the NOT GO thread plug gage as applied to the product internal thread does not enter more than three complete turns. The gage should not be forced. Special requirements such as exceptionally thin or ductile material, small number of threads, etc., may necessitate modification of this practice.

4.2.2 Basic Design. To better check the maximum functional diameter limit, the flank contact is reduced by truncating the major diameter, and the length of the gaging element where practical is less than that of the GO gage. Gages are never made with controlled radius root such as described for full-form GO thread plug gages.

4.2.3 Gage Blanks. For practical and economic reasons, the design and lengths of the gaging elements have been standardized for various size ranges and pitches (see ANSI/ASME B47.1aM or Table C2).

4.2.4 Thread Form. The specifications for thread form are summarized in Table 7 and Fig. 3.

4.2.5 Thread Crests. The maximum major diameter of the NOT GO thread plug gage shall be equal to the maximum pitch diameter of the product internal thread plus $0.2P$, with a minus gage tolerance. This corresponds to a width of flat at the crest of the gage equal to $0.385P$ (see Table 7).

4.2.6 Thread Roots. The minor diameter of the NOT GO thread plug gage shall be cleared beyond a $P/8$ width of flat by an extension toward a sharp vee of the sides of the thread from the position corresponding to this approximate width or by an undercut to any dimension no wider than the width resulting from $P/8$

Copyright ASME International
Provided by IHS under license with ASME
No reproduction or networking permitted without license from IHS
Not for Resale

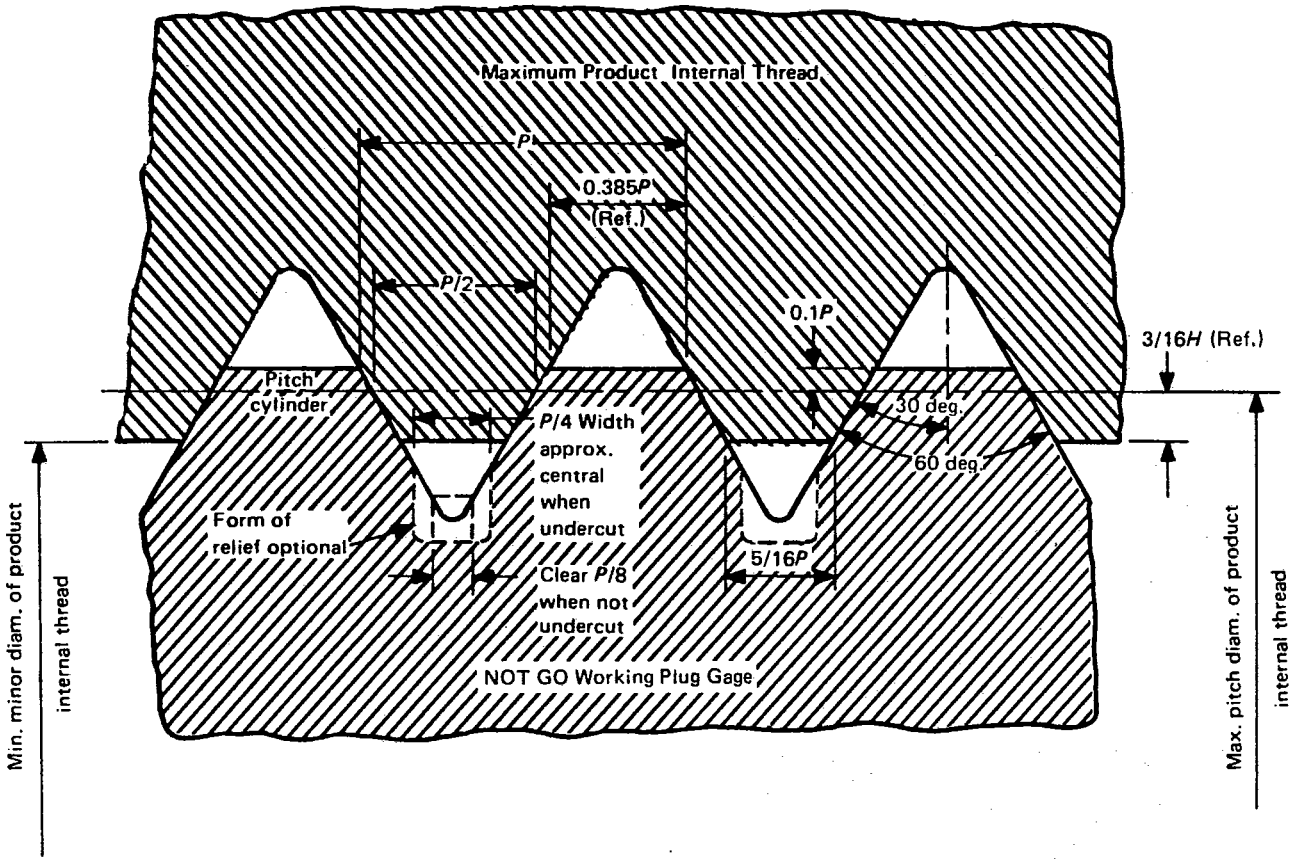

FIG. 3 NOT GO FUNCTIONAL DIAMETER LIMIT
(Ref. Table 2 — Column B_1)

maximum width, either side of and approximately central with the center line of the thread groove.

4.2.7 Runout of Pitch and Major Cylinders. The permissible maximum effective diameter, as determined by adding measurements of runout (full-indicator movement) with respect to the pitch cylinder to the measured major diameter, shall not exceed the maximum major diameter specified.

4.2.8 Pitch Cylinder. The pitch cylinder shall be round and straight within the gage pitch diameter limits specified.

4.2.9 Lead and Half-Angle Variations. Lead and half-angle variations shall be within the limits specified (see Table 9).

4.2.10 Incomplete Thread. The feather edge at both ends of the threaded section of the gaging member shall be removed. On pitches coarser than 0.8 mm, one complete thread ±¼ turn of the end threads shall be removed to obtain a full-thread blunt start (see Fig. 2). On pitches 0.8 mm and finer, a 60 deg. chamfer from the axis of the gage is acceptable in lieu of the blunt start.

4.2.11 Identification. The NOT GO thread plug gage should be marked with the metric nominal size, ×, pitch-tolerance class, NOT GO, PD, and pitch diameter in millimeters.

EXAMPLE:
MJ8×1-4H5H NOT GO PD7.445

ANSI/ASME B1.16M NOT GO thread plugs are interchangeable with MJ thread gages for the same class of thread.

Copyright ASME International
Provided by IHS under license with ASME
No reproduction or networking permitted without license from IHS

Not for Resale

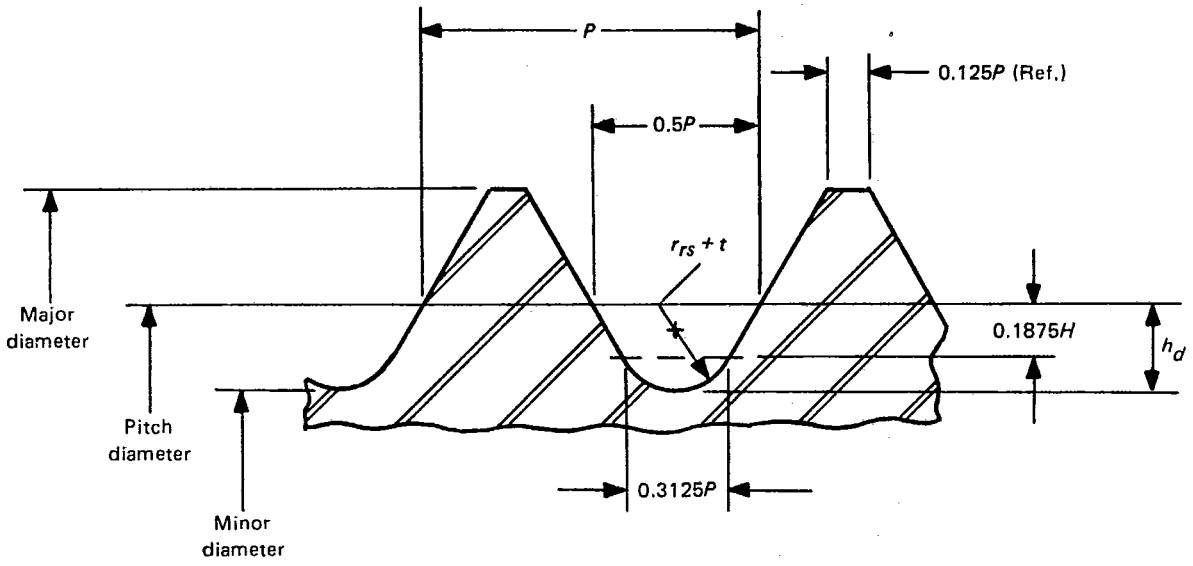

FIG. 4 MJ FULL-FORM THREAD PLUG GAGE (Ref. Table 4)

4.3 Full-Form GO Thread Plug Gage (Table 2 — Gage 1.3)

4.3.1 Purpose and Use. In the same manner as the GO thread plug gage (see para. 4.1.1), the full-form GO thread plug gage inspects the maximum-material GO functional limit A_1 of product internal thread, including a degree of spin down at the minor diameter.

The *spin down* is the flow of material (plastic deformation) that may occur when producing product internal threads in some materials, causing a reduction in minor diameter size below what it was before threading.

The full-form GO thread plug gage screwed by hand should enter the full threaded length of the product freely.

4.3.2 Basic Design. The maximum-material limit on the GO thread plug gage is made to the prescribed maximum-material limit of the product internal thread, and the gaging length is equal to the length of the gaging plug. A radius is provided in the minor diameter of the plug to inspect the spin down (see Fig. 4).

4.3.3 Gage Blanks. For practical and economic reasons, the design and lengths of the gaging plug members have been standardized for various size ranges and pitches (see ANSI/ASME B47.1aM or Table C2).

4.3.4 Thread Form. Full-form GO thread plug gages are made the same in all respects as the GO thread plug gage, except that the gage minor diameter has a full root radius equal to the maximum root radius of the external metric J thread (0.18042*P*). A plus gage tolerance is applied to this radius (see Fig. 4 and Table 4).

4.3.5 Gage Minor Diameter. The minimum minor diameter of the full-form GO thread plug gage is equal to the minimum gage pitch diameter minus two times the maximum dedendum of the thread, shown as $2h_d$ in Table 4, column 4. The maximum minor diameter of the gage is equal to the gage minimum minor diameter plus the gage tolerance on pitch diameter (normally X) plus the radius tolerance factor, shown as *T* in Table 4, column 7.

4.3.6 Gage Tolerance for Minor Diameter Radius. The radius tolerance is equal to 10% of the radius size for pitches finer than 1.5 mm. For pitches from 1.5 mm through 3 mm, the tolerance is equal to 0.025 mm. For coarser pitches the tolerance is equal to 5% of the radius size.

4.3.7 Thread Crests. The major diameter of the GO thread plug gage shall be the same as the minimum major diameter of the product internal thread with a plus gage tolerance. The thread crests shall be flat in an axial section and parallel to the axis.

4.3.8 Runout of Pitch and Major Cylinders. On thread plug gages an eccentric condition produces an oversize effective major diameter, having a width of flat

Copyright ASME International
Provided by IHS under license with ASME
No reproduction or networking permitted without license from IHS

Not for Resale

TABLE 4 THREAD DATA, MJ FULL-FORM THREAD GAGES

Pitch P	Space Width of Pitch Cylinder $0.5P$	Maximum Dedendum $h_d = \frac{7}{24}H$ $0.25259P$	Two Times Maximum Dedendum $2h_d = \frac{7}{12}H$ $0.50518P$	Root Radius r_{rs} $0.18042P$	Root Radius Tolerance (Plus) [Note (1)] t	Tolerance Factor [Note (2)] T	Tangency Width $0.3125P$	Tangency Depth $0.1875H$ $0.16238P$	Twice Tangency Depth $0.375H$ $0.32476P$
1	2	3	4	5	6	7	8	9	10
mm	mm	mm	mm	mm	mm	mm	mm	mm	mm
0.2	0.100	0.0505	0.1010	0.0361	0.0036	0.0072	0.0625	0.0325	0.0650
0.25	0.125	0.0631	0.1263	0.0451	0.0045	0.0090	0.0781	0.0406	0.0812
0.3	0.150	0.0758	0.1516	0.0541	0.0054	0.0108	0.0938	0.0487	0.0974
0.35	0.175	0.0884	0.1768	0.0631	0.0063	0.0126	0.1094	0.0568	0.1137
0.4	0.200	0.1010	0.2021	0.0722	0.0072	0.0144	0.1250	0.0650	0.1299
0.45	0.225	0.1137	0.2273	0.0812	0.0081	0.0162	0.1406	0.0731	0.1461
0.5	0.250	0.1263	0.2526	0.0902	0.0090	0.0180	0.1562	0.0812	0.1624
0.6	0.300	0.1516	0.3031	0.1082	0.0108	0.0216	0.1875	0.0974	0.1949
0.7	0.350	0.1768	0.3536	0.1263	0.0126	0.0252	0.2188	0.1137	0.2273
0.75	0.375	0.1894	0.3769	0.1353	0.0135	0.0270	0.2344	0.1218	0.2436
0.8	0.400	0.2021	0.4041	0.1443	0.0144	0.0288	0.2500	0.1299	0.2598
1	0.500	0.2526	0.5052	0.1804	0.0180	0.0360	0.3125	0.1624	0.3248
1.25	0.625	0.3157	0.6315	0.2255	0.0226	0.0452	0.3906	0.2030	0.4060
1.5	0.750	0.3789	0.7578	0.2706	0.0250	0.0500	0.4688	0.2436	0.4871
1.75	0.875	0.4420	0.8841	0.3157	0.0250	0.0500	0.5469	0.2832	0.5683
2	1.000	0.5052	1.0104	0.3608	0.0250	0.0500	0.6250	0.3248	0.6495
2.5	1.250	0.6315	1.2630	0.4510	0.0250	0.0500	0.7812	0.4060	0.8119
3	1.500	0.7578	1.5155	0.5413	0.0250	0.0500	0.9375	0.4871	0.9743
3.5	1.750	0.8841	1.7681	0.6315	0.0316	0.0632	1.0938	0.5683	1.1367
4	2.000	1.0104	2.0207	0.7217	0.0361	0.0722	1.2500	0.6495	1.2990
4.5	2.250	1.1367	2.2733	0.8119	0.0406	0.0812	1.4063	0.7307	1.4614
5	2.500	1.2630	2.5259	0.9021	0.0451	0.0902	1.5625	0.8119	1.6238
5.5	2.750	1.3892	2.7785	0.9923	0.0496	0.0992	1.7188	0.8931	1.7862
6	3.000	1.5155	3.0311	1.0825	0.0541	0.1082	1.8750	0.9743	1.9486
8	4.000	2.0207	4.0414	1.4434	0.0722	0.1443	2.5000	1.2990	2.5981

GENERAL NOTE: See Table 12 for additional information.

NOTES:
(1) See para. 4.3.6.
(2) Equal to $2t$.

Copyright ASME International
Provided by IHS under license with ASME
No reproduction or networking permitted without license from IHS

Not for Resale

less than *P*/8, which may encroach on the minimum permissible limit for the root profile of the product internal thread. The permissible maximum effective major diameter, as determined by adding the measurement of runout (full-indicator reading) with respect to the pitch cylinder to the measured major diameter, shall not exceed the major diameter specified.

4.3.9 Pitch Cylinder. The pitch cylinder shall be round and straight within the gage pitch diameter limits specified.

4.3.10 Lead and Half-Angle Variations. Lead and half-angle variations shall be within the limits specified (see Table 9).

4.3.11 Incomplete Thread. The feather edge at both ends of the threaded section of the gaging member shall be removed. On pitches coarser than 0.8 mm, one complete thread ±¼ turn of the end threads shall be removed to obtain a full-thread-form blunt start (see Fig. 2). On pitches 0.8 mm and finer, a 60 deg. chamfer from the axis of the gage is acceptable in lieu of the blunt start.

4.3.12 Chip Grooves. Each full-form GO plug gage, except in sizes MJ4 and smaller, shall be provided with a chip groove at the entering end. On reversible gages, a chip groove shall be provided at each end. Acceptable chip grooves are in accordance with commercial practice, such as a groove cut at an angle with the axis or a longitudinal groove cut parallel with the axis and extending the complete length of the gaging member. The groove shall be located circumferentially at the start of the full thread, and in all cases the depth shall extend below the root of the first full thread. The distance from the major diameter of the thread plug to the crest of the convolution rise in front of the chip groove, due to the radius of the convoluting tool, shall be a minimum of *H*/2 as shown in Fig. 2. The beginning of the first thread shall be of full form. The recommended widths for chip grooves are as shown in Table 3.

4.3.13 Identification. The full-form GO thread plugs should be marked with the metric nominal size, ×, pitch-tolerance class, FULL FORM, GO, PD, and pitch diameter in millimeters.

EXAMPLE:
MJ8×1-4H5H FULL FORM GO PD7.350

4.4 Thread Snap Gages — GO Segments or Rolls (Table 2 — Gages 2.1 and 2.3)

4.4.1 Purpose and Use. The thread snap gage with two GO threaded segments or two GO zero-lead rolls inspects the maximum-material GO functional limit A_1 of product internal thread. The setting of the GO segments or rolls represents the maximum-material GO functional limit of the product internal thread, and its purpose is to assure interchangeable assembly of maximum-material mating parts. The segments or rolls theoretically engage over the full threaded length of the product. The segments or rolls have a cumulative check of all thread elements except the minor diameter.

Internal thread snap gages by design must have outside diameter of gaging elements below minor diameter of internal thread in order to enter. The gage checks all thread elements by sensing the resistance at contact after being set to a master.

The GO thread snap gage can also indicate out-of-roundness of pitch cylinder for 180 deg. ovality by using the gage at different internal diametral locations on the product thread.

4.4.2 Basic Design. The GO segments and rolls assembled into gage frames are the design of the individual gage manufacturer. The lengths of the two threaded segments and the two thread rolls spaced 180 deg. apart are equivalent to the standard GO plug gage blank lengths for practical and economic reasons (see Table C2 and Fig. 5). Internal product threads less than 3 mm in diameter are not practical to check with snap gages. GO thread segments shall engage 25% or more of the product circumference. The product shall be checked around the circumference of thread at sufficient axial positions to check the full thread length. Thread rolls shall be applied axially at several locations (three if possible) over the full thread length of product. The circumference shall be checked at each position.

4.4.3 Thread Form. The specifications for thread form are summarized in Table 7 and Fig. 5.

4.4.4 Thread Crests. The outside diameter of the threaded portion of the GO segments or rolls has the equivalent of a *P*/8 flat on the thread with a plus gage tolerance. The thread crests shall be flat in an axial section and parallel to the axis of the gaging member.

4.4.5 Thread Roots. The minor diameter of the threaded portion of the GO segments or rolls shall be cleared beyond a *P*/8 flat either by an extension of the flanks of the thread toward a sharp vee or by an undercut no greater than *P*/8 maximum width and approximately central.

4.4.6 Runout. The pitch and major cylinders of the threaded portion of the GO segments or rolls shall not exceed the runout as determined by measurements of runout (full-indicator movement) on each gaging member, with respect to the pitch cylinder. Runout shall not exceed one-half the X gage major diameter tolerance.

Copyright ASME International
Provided by IHS under license with ASME
No reproduction or networking permitted without license from IHS

Not for Resale

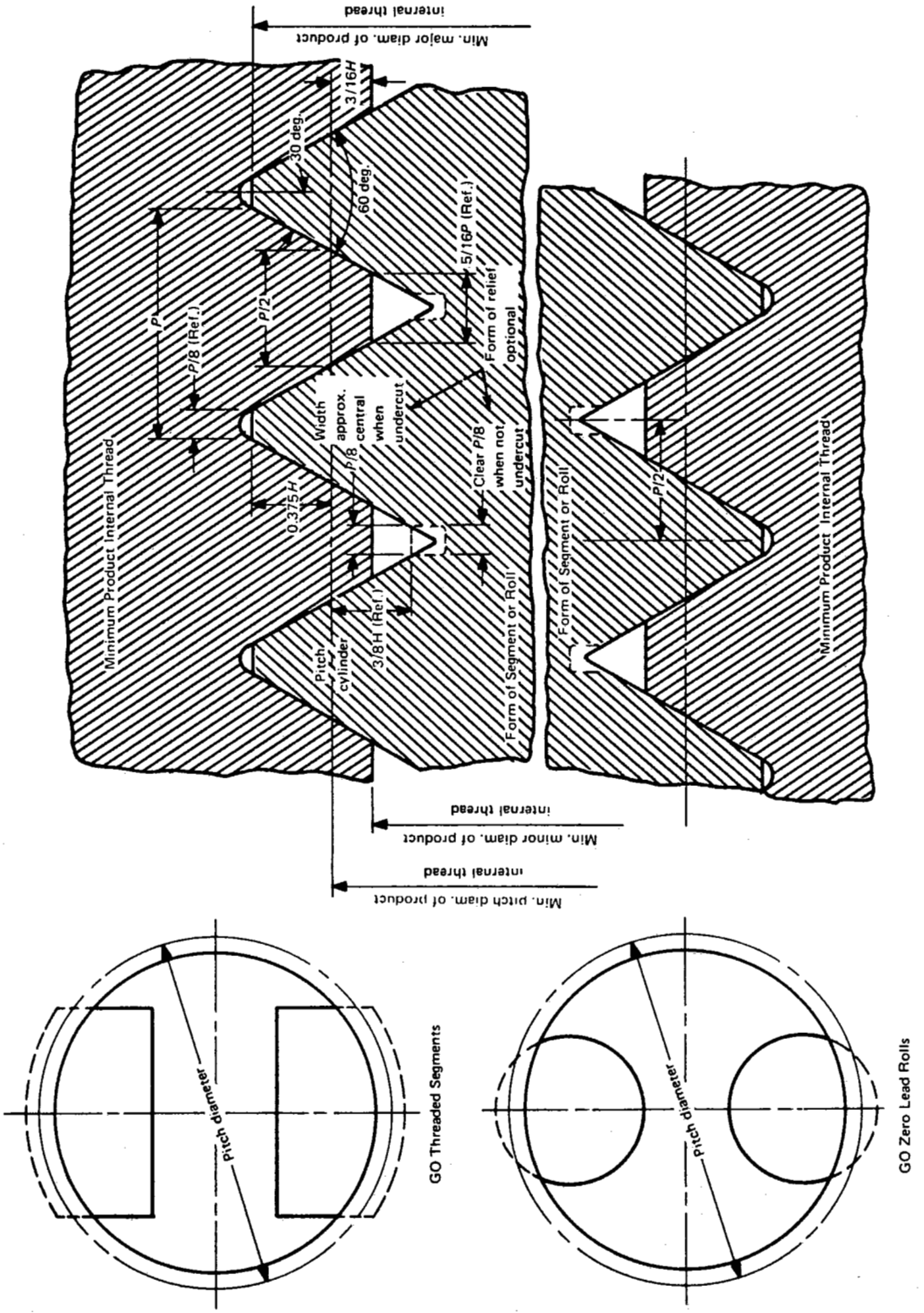

FIG. 5 THREAD SNAP GAGES — MAXIMUM-MATERIAL GO FUNCTIONAL LIMIT
(Ref. Table 2 — Column A_1)

Copyright ASME International
Provided by IHS under license with ASME
No reproduction or networking permitted without license from IHS

Not for Resale

TABLE 5 GAGES FOR STANDARD THREAD SERIES METRIC MJ SCREW THREADS — LIMITS OF SIZE

		Gages for External Threads						Gages for Internal Threads										
		X Thread Gages				Z Plain Gages for Major Diam.		X Thread Gages								Z Plain Gages for Minor Diam.		
		GO		NOT GO				GO		Full-Form GO				NOT GO				
Nominal Size and Pitch	Class	Pitch Diam.	Minor Diam.	Pitch Diam.	Minor Diam.	GO	NOT GO	Major Diam.	Pitch Diam.	Major Diam.	Pitch Diam.	Root Radius	Minor Diam.	Major Diam.	Pitch Diam.	GO	NOT GO	Class
1	2	3	4	5	6	7	8	9	10	11	12	13	14	15	16	17	18	19
mm		mm	mm	mm	mm	mm	mm	mm	mm	mm	mm	mm	mm	mm	mm	mm	mm	
MJ1.6 × 0.35	4h6h	1.373 1.368	1.259 1.251	1.333 1.338	1.263 1.271	1.600 1.597	1.515 1.518	1.600 1.608	1.373 1.378	1.600 1.608	1.373 1.378	0.063 0.069	1.196 1.214	1.496 1.488	1.426 1.421	1.259 1.262	1.359 1.356	4H6H
MJ2 × 0.4	4h6h	1.740 1.735	1.610 1.600	1.698 1.703	1.618 1.628	2.000 1.997	1.905 1.908	2.000 2.010	1.740 1.745	2.000 2.010	1.740 1.745	0.072 0.079	1.538 1.557	1.876 1.866	1.796 1.791	1.610 1.613	1.722 1.719	4H6H
MJ2.5 × 0.45	4h6h	2.208 2.203	2.062 2.052	2.163 2.168	2.073 2.083	2.500 2.497	2.400 2.403	2.500 2.510	2.208 2.213	2.500 2.510	2.208 2.213	0.081 0.089	1.981 2.002	2.358 2.348	2.268 2.263	2.062 2.065	2.187 2.184	4H6H
MJ3 × 0.5	4h6h	2.675 2.670	2.513 2.503	2.627 2.632	2.527 2.537	3.000 2.997	2.894 2.897	3.000 3.010	2.675 2.680	3.000 3.010	2.675 2.680	0.090 0.099	2.422 2.445	2.838 2.828	2.738 2.733	2.513 2.516	2.653 2.650	4H6H
MJ3.5 × 0.6	4h6h	3.110 3.105	2.915 2.905	3.057 3.062	2.937 2.947	3.500 3.497	3.375 3.378	3.500 3.510	3.110 3.115	3.500 3.510	3.110 3.115	0.108 0.119	2.807 2.834	3.301 3.291	3.181 3.176	2.915 2.918	3.075 3.072	4H6H
MJ4 × 0.7	4h6h	3.545 3.540	3.318 3.308	3.489 3.494	3.349 3.359	4.000 3.997	3.860 3.863	4.000 4.010	3.545 3.550	4.000 4.010	3.545 3.550	0.126 0.139	3.191 3.221	3.760 3.750	3.620 3.615	3.318 3.321	3.498 3.495	4H6H
MJ5 × 0.8	4h6h	4.480 4.472	4.221 4.208	4.420 4.428	4.260 4.273	5.000 4.997	4.850 4.853	5.000 5.013	4.480 4.488	5.000 5.013	4.480 4.488	0.144 0.158	4.076 4.113	4.720 4.707	4.560 4.552	4.221 4.224	4.421 4.418	4H6H
MJ6 × 1	4h6h	5.350 5.342	5.026 5.013	5.279 5.287	5.079 5.092	6.000 5.997	5.820 5.823	6.000 6.013	5.350 5.358	6.000 6.013	5.350 5.358	0.180 0.198	4.845 4.889	5.645 5.632	5.445 5.437	5.026 5.029	5.216 5.213	4H5H
MJ7 × 1	4h6h	6.350 6.342	6.026 6.013	6.279 6.287	6.079 6.092	7.000 6.997	6.820 6.823	7.000 7.013	6.350 6.358	7.000 7.013	6.350 6.358	0.180 0.198	5.845 5.889	6.645 6.632	6.445 6.437	6.026 6.029	6.216 6.213	4H5H
MJ8 × 1	4h6h	7.350 7.342	7.026 7.013	7.279 7.287	7.079 7.092	8.000 7.997	7.820 7.823	8.000 8.013	7.350 7.358	8.000 8.013	7.350 7.358	0.180 0.198	6.845 6.889	7.645 7.632	7.445 7.437	7.026 7.029	7.216 7.213	4H5H
MJ8 × 1.25	4h6h	7.188 7.180	6.782 6.769	7.113 7.121	6.863 6.876	8.000 7.997	7.788 7.791	8.000 8.013	7.188 7.196	8.000 8.013	7.188 7.196	0.226 0.249	6.557 6.610	7.538 7.525	7.288 7.280	6.782 6.785	6.994 6.991	4H5H
MJ10 × 0.75	4h6h	9.513 9.508	9.269 9.259	9.450 9.455	9.300 9.310	10.000 9.997	9.860 9.863	10.000 10.010	9.513 9.518	10.000 10.010	9.513 9.518	0.135 0.149	9.134 9.166	9.748 9.738	9.598 9.593	9.269 9.272	9.419 9.416	4H5H
MJ10 × 1.25	4h6h	9.188 9.180	8.782 8.769	9.113 9.121	8.863 8.876	10.000 9.997	9.788 9.791	10.000 10.013	9.188 9.196	10.000 10.013	9.188 9.196	0.226 0.249	8.557 8.610	9.538 9.525	9.288 9.280	8.782 8.785	8.994 8.991	4H5H
MJ10 × 1.5	4h6h	9.026 9.018	8.539 8.524	8.941 8.949	8.641 8.656	10.000 9.997	9.764 9.767	10.000 10.015	9.026 9.034	10.000 10.015	9.026 9.034	0.271 0.296	8.268 8.326	9.438 9.423	9.138 9.130	8.539 8.542	8.775 8.772	4H5H
MJ11 × 1.25	4h6h	10.188 10.180	9.782 9.769	10.113 10.121	9.863 9.876	11.000 10.997	10.788 10.791	11.000 11.013	10.188 10.196	11.000 11.013	10.188 10.196	0.226 0.249	9.557 9.610	10.538 10.525	10.288 10.280	9.782 9.785	9.994 9.991	4H5H

Copyright ASME International
Provided by IHS under license with ASME
No reproduction or networking permitted without license from IHS
Not for Resale

TABLE 5 GAGES FOR STANDARD THREAD SERIES METRIC MJ SCREW THREADS — LIMITS OF SIZE (CONT'D)

		Gages for External Threads						Gages for Internal Threads										
		X Thread Gages				Z Plain Gages for Major Diam.		X Thread Gages								Z Plain Gages for Minor Diam.		
		GO		NOT GO				GO		Full-Form GO				NOT GO				
Nominal Size and Pitch	Class	Pitch Diam.	Minor Diam.	Pitch Diam.	Minor Diam.	GO	NOT GO	Major Diam.	Pitch Diam.	Major Diam.	Pitch Diam.	Root Radius	Minor Diam.	Major Diam.	Pitch Diam.	GO	NOT GO	Class
1	2	3	4	5	6	7	8	9	10	11	12	13	14	15	16	17	18	19
mm		mm	mm	mm	mm	mm	mm	mm	mm	mm	mm	mm	mm	mm	mm	mm	mm	
MJ12 × 1	4h6h	11.350 11.342	11.026 11.013	11.275 11.283	11.075 11.088	12.000 11.997	11.820 11.823	12.000 12.013	11.350 11.358	12.000 12.013	11.350 11.358	0.180 0.198	10.845 10.889	11.650 11.637	11.450 11.442	11.026 11.029	11.216 11.213	4H5H
MJ12 × 1.25	4h6h	11.188 11.180	10.782 10.769	11.103 11.111	10.853 10.866	12.000 11.997	11.788 11.791	12.000 12.013	11.188 11.196	12.000 12.013	11.188 11.196	0.226 0.249	10.557 10.610	11.550 11.537	11.300 11.292	10.782 10.785	10.994 10.991	4H5H
MJ12 × 1.75	4h6h	10.863 10.855	10.295 10.280	10.768 10.776	10.418 10.433	12.000 11.997	11.735 11.738	12.000 12.015	10.863 10.871	12.000 12.015	10.863 10.871	0.316 0.341	9.979 10.037	11.338 11.323	10.988 10.980	10.295 10.298	10.560 10.557	4H5H
MJ14 × 1.5	4h6h	13.026 13.018	12.539 12.524	12.936 12.944	12.636 12.651	14.000 13.997	13.764 13.767	14.000 14.015	13.026 13.034	14.000 14.015	13.026 13.034	0.271 0.296	12.268 12.326	13.444 13.429	13.144 13.136	12.539 12.542	12.775 12.772	4H5H
MJ14 × 2	4h6h	12.701 12.693	12.051 12.036	12.601 12.609	12.201 12.216	14.000 13.997	13.720 13.723	14.000 14.015	12.701 12.709	14.000 14.015	12.701 12.709	0.361 0.386	11.691 11.749	13.233 13.218	12.833 12.825	12.051 12.054	12.351 12.348	4H5H
MJ15 × 1	4h6h	14.350 14.342	14.026 14.013	14.275 14.283	14.075 14.088	15.000 14.997	14.820 14.823	15.000 15.013	14.350 14.358	15.000 15.013	14.350 14.358	0.180 0.198	13.845 13.889	14.650 14.637	14.450 14.442	14.026 14.029	14.216 14.213	4H5H
MJ16 × 1.5	4h6h	15.026 15.018	14.539 14.524	14.936 14.944	14.636 14.651	16.000 15.997	15.764 15.767	16.000 16.015	15.026 15.034	16.000 16.015	15.026 15.034	0.271 0.296	14.268 14.326	15.444 15.429	15.144 15.136	14.539 14.542	14.775 14.772	4H5H
MJ16 × 2	4h6h	14.701 14.693	14.051 14.036	14.601 14.609	14.201 14.216	16.000 15.997	15.720 15.723	16.000 16.015	14.701 14.709	16.000 16.015	14.701 14.709	0.361 0.386	13.691 13.749	15.233 15.218	14.833 14.825	14.051 14.054	14.351 14.348	4H5H
MJ17 × 1	4h6h	16.350 16.342	16.026 16.013	16.275 16.283	16.075 16.088	17.000 16.997	16.820 16.823	17.000 17.013	16.350 16.358	17.000 17.013	16.350 16.358	0.180 0.198	15.845 15.889	16.650 16.637	16.450 16.442	16.026 16.029	16.216 16.213	4H5H
MJ18 × 1.5	4h6h	17.026 17.018	16.539 16.524	16.936 16.944	16.636 16.651	18.000 17.997	17.764 17.767	18.000 18.015	17.026 17.034	18.000 18.015	17.026 17.034	0.271 0.296	16.268 16.326	17.444 17.429	17.144 17.136	16.539 16.542	16.775 16.772	4H5H
MJ20 × 1	4h6h	19.350 19.342	19.026 19.013	19.275 19.283	19.075 19.088	20.000 19.997	19.820 19.823	20.000 20.013	19.350 19.358	20.000 20.013	19.350 19.358	0.180 0.198	18.845 18.889	19.650 19.637	19.450 19.442	19.026 19.029	19.216 19.213	4H5H
MJ20 × 1.5	4h6h	19.026 19.018	18.539 18.524	18.936 18.944	18.636 18.651	20.000 19.997	19.764 19.767	20.000 20.015	19.026 19.034	20.000 20.015	19.026 19.034	0.271 0.296	18.268 18.326	19.444 19.429	19.144 19.136	18.539 18.542	18.775 18.772	4H5H
MJ20 × 2.5	4h6h	18.376 18.368	17.564 17.549	18.270 18.278	17.770 17.785	20.000 19.997	19.665 19.668	20.000 20.015	18.376 18.384	20.000 20.015	18.376 18.384	0.451 0.476	17.113 17.171	19.016 19.001	18.516 18.508	17.564 17.567	17.919 17.916	4H5H
MJ22 × 1.5	4h6h	21.026 21.018	20.539 20.524	20.936 20.944	20.636 20.651	22.000 21.997	21.764 21.767	22.000 22.015	21.026 21.034	22.000 22.015	21.026 21.034	0.271 0.296	20.268 20.326	21.444 21.429	21.144 21.136	20.539 20.542	20.775 20.772	4H5H
MJ24 × 2	4h6h	22.701 22.693	22.051 22.036	22.595 22.603	22.195 22.210	24.000 23.997	23.720 23.723	24.000 24.015	22.701 22.709	24.000 24.015	22.701 22.709	0.361 0.386	21.691 21.749	23.241 23.226	22.841 22.833	22.051 22.054	22.351 22.348	4H5H

Copyright ASME International
Provided by IHS under license with ASME
No reproduction or networking permitted without license from IHS
Not for Resale

TABLE 5 GAGES FOR STANDARD THREAD SERIES METRIC MJ SCREW THREADS — LIMITS OF SIZE (CONT'D)

		Gages for External Threads						Gages for Internal Threads										
		X Thread Gages				Z Plain Gages for Major Diam.		X Thread Gages								Z Plain Gages for Minor Diam.		
		GO		NOT GO				GO		Full-Form GO				NOT GO				
Nominal Size and Pitch	Class	Pitch Diam.	Minor Diam.	Pitch Diam.	Minor Diam.	GO	NOT GO	Major Diam.	Pitch Diam.	Major Diam.	Pitch Diam.	Root Radius	Minor Diam.	Major Diam.	Pitch Diam.	GO	NOT GO	Class
1	2	3	4	5	6	7	8	9	10	11	12	13	14	15	16	17	18	19
mm		mm	mm	mm	mm	mm	mm	mm	mm	mm	mm	mm	mm	mm	mm	mm	mm	
MJ24 × 3	4h6h	22.051 22.041	21.077 21.059	21.926 21.936	21.326 21.344	24.000 23.997	23.625 23.628	24.000 24.018	22.051 22.061	24.000 24.018	22.051 22.061	0.541 0.566	20.535 20.595	22.821 22.803	22.221 22.211	21.077 21.080	21.477 21.474	4H5H
MJ25 × 1.5	4h6h	24.026 24.018	23.539 23.524	23.931 23.939	23.631 23.646	25.000 24.997	24.764 24.767	25.000 25.015	24.026 24.034	25.000 25.015	24.026 24.034	0.271 0.296	23.268 23.326	24.451 24.436	24.151 24.143	23.539 23.542	23.775 23.772	4H5H
MJ27 × 2	4h6h	25.701 25.693	25.051 25.036	25.595 25.603	25.195 25.210	27.000 26.997	26.720 26.723	27.000 27.015	25.701 25.709	27.000 27.017	25.701 25.709	0.361 0.386	24.691 24.749	26.241 26.226	25.841 25.833	25.051 25.054	25.351 25.348	4H5H
MJ30 × 1.5	4h6h	29.026 29.018	28.539 28.524	28.931 28.939	28.631 28.646	30.000 29.997	29.764 29.767	30.000 30.015	29.026 29.034	30.000 30.015	29.026 29.034	0.271 0.296	28.268 28.326	29.451 29.436	29.151 29.143	28.539 28.542	28.775 28.772	4H5H
MJ30 × 2	4h6h	28.701 28.693	28.051 28.036	28.595 28.603	28.195 28.210	30.000 29.997	29.720 29.723	30.000 30.015	28.701 28.709	30.000 30.015	28.701 28.709	0.361 0.386	27.691 27.749	29.241 29.226	28.841 28.833	28.051 28.054	28.351 28.348	4H5H
MJ30 × 3.5	4h6h	27.727 27.717	26.590 26.572	27.595 27.605	26.895 26.913	30.000 29.997	29.575 29.578	30.000 30.018	27.727 27.737	30.000 30.018	27.727 27.737	0.631 0.663	25.959 26.032	28.607 28.589	27.907 27.897	26.590 26.593	27.040 27.037	4H5H
MJ33 × 2	4h6h	31.701 31.693	31.051 31.036	31.595 31.603	31.195 31.210	33.000 32.997	32.720 32.723	33.000 33.015	31.701 31.709	33.000 33.015	31.701 31.709	0.361 0.386	30.691 30.749	32.241 32.226	31.841 31.833	31.051 31.054	31.351 31.348	4H5H
MJ35 × 1.5	4h6h	34.026 34.018	33.539 33.524	33.931 33.939	33.631 33.646	35.000 34.997	34.764 34.767	35.000 35.015	34.026 34.034	35.000 35.015	34.026 34.034	0.271 0.296	33.268 33.326	34.451 34.436	34.151 34.143	33.539 33.542	33.775 33.772	4H5H
MJ36 × 2	4h6h	34.701 34.693	34.051 34.036	34.595 34.603	34.195 34.210	36.000 35.997	35.720 35.723	36.000 36.015	34.701 34.709	36.000 36.015	34.701 34.709	0.361 0.386	33.691 33.749	35.241 35.226	34.841 34.833	34.051 34.054	34.351 34.348	4H5H
MJ36 × 4	4h6h	33.402 33.392	32.103 32.085	33.262 33.272	32.462 32.480	36.000 35.997	35.525 35.528	36.000 36.018	33.402 33.412	36.000 36.018	33.402 33.412	0.722 0.758	31.381 31.463	34.392 34.374	33.592 33.582	32.103 32.106	32.578 32.575	4H5H
MJ39 × 2	4h6h	37.701 37.693	37.051 37.036	37.595 37.603	37.195 37.210	39.000 38.996	38.720 38.724	39.000 39.015	37.701 37.709	39.000 39.015	37.701 37.709	0.361 0.386	36.691 36.749	38.241 38.226	37.841 37.833	37.051 37.054	37.351 37.348	4H5H
MJ40 × 1.5	4h6h	39.026 39.016	38.539 38.524	38.931 38.941	38.631 38.646	40.000 39.996	39.764 39.768	40.000 40.015	39.026 39.036	40.000 40.015	39.026 39.036	0.271 0.296	38.268 38.328	39.451 39.436	39.151 39.141	38.539 38.543	38.775 38.771	4H5H
MJ42 × 2	4h6h	40.701 40.691	40.051 40.036	40.595 40.605	40.195 40.210	42.000 41.996	41.720 41.724	42.000 42.015	40.701 40.711	42.000 42.015	40.701 40.711	0.361 0.386	39.691 39.751	41.241 41.226	40.841 40.831	40.051 40.055	40.351 40.347	4H5H
MJ42 × 4.5	4h6h	39.077 39.064	37.616 37.596	38.927 38.940	38.027 38.047	42.000 41.996	41.500 41.504	42.000 42.020	39.077 39.090	42.000 42.020	39.077 39.090	0.812 0.853	36.804 36.898	40.177 40.157	39.277 39.264	37.616 37.619	38.146 38.142	4H5H
MJ45 × 1.5	4h6h	44.026 44.016	43.539 43.524	43.931 43.941	43.631 43.646	45.000 44.996	44.764 44.768	45.000 45.015	44.026 44.036	45.000 45.015	44.026 44.036	0.271 0.296	43.268 43.328	44.451 44.436	44.151 44.141	43.539 43.543	43.775 43.771	4H5H

Copyright ASME International
Provided by IHS under license with ASME
No reproduction or networking permitted without license from IHS
Not for Resale

TABLE 5 GAGES FOR STANDARD THREAD SERIES METRIC MJ SCREW THREADS — LIMITS OF SIZE (CONT'D)

	Gages for External Threads							Gages for Internal Threads										
		X Thread Gages				Z Plain Gages for Major Diam.		X Thread Gages								Z Plain Gages for Minor Diam.		
		GO		NOT GO				GO		Full-Form GO				NOT GO				
Nominal Size and Pitch	Class	Pitch Diam.	Minor Diam.	Pitch Diam.	Minor Diam.	GO	NOT GO	Major Diam.	Pitch Diam.	Major Diam.	Pitch Diam.	Root Radius	Minor Diam.	Major Diam.	Pitch Diam.	GO	NOT GO	Class
1	2	3	4	5	6	7	8	9	10	11	12	13	14	15	16	17	18	19
mm		mm	mm	mm	mm	mm	mm	mm	mm	mm	mm	mm	mm	mm	mm	mm	mm	
MJ48 × 2	4h6h	46.701 46.691	46.051 46.036	46.589 46.599	46.189 46.204	48.000 47.996	47.720 47.724	48.000 48.015	46.701 46.711	48.000 48.015	46.701 46.711	0.361 0.386	45.691 45.751	47.251 47.236	46.851 46.841	46.051 46.055	46.351 46.347	4H5H
MJ48 × 5	4h6h	44.752 44.739	43.129 43.109	44.592 44.605	43.592 43.612	48.000 47.996	47.470 47.474	48.000 48.020	44.752 44.765	48.000 48.020	44.752 44.765	0.902 0.947	42.226 42.329	45.964 45.944	44.964 44.951	43.129 43.133	43.689 43.685	4H5H
MJ50 × 1.5	4h6h	49.026 49.016	48.539 48.524	48.926 48.936	48.626 48.641	50.000 49.996	49.764 49.768	50.000 50.015	49.026 49.036	50.000 50.015	49.026 49.036	0.271 0.296	48.268 48.328	49.458 49.443	49.158 49.148	48.539 48.543	48.775 48.771	4H5H
MJ55 × 1.5	4h6h	54.026 54.016	53.539 53.524	53.926 53.936	53.626 53.641	55.000 54.996	54.764 54.768	55.000 55.015	54.026 54.036	55.000 55.015	54.026 54.036	0.271 0.296	53.268 53.328	54.458 54.443	54.158 54.148	53.539 53.543	53.775 53.771	4H5H
MJ56 × 2	4h6h	54.701 54.691	54.051 54.036	54.589 54.599	54.189 54.204	56.000 55.996	55.720 55.724	56.000 56.015	54.701 54.711	56.000 56.015	54.701 54.711	0.361 0.386	53.691 53.751	55.251 55.236	54.851 54.841	54.051 54.055	54.351 54.347	4H5H
MJ56 × 5.5	4h6h	52.428 52.415	50.641 50.621	52.258 52.271	51.158 51.178	56.000 55.996	55.440 55.444	56.000 56.020	52.428 52.441	56.000 56.020	52.428 52.441	0.992 1.042	49.650 49.762	53.752 53.732	52.652 52.639	50.641 50.645	51.241 51.237	4H5H
MJ60 × 1.5	4h6h	59.026 59.016	58.539 58.524	58.926 58.936	58.626 58.641	60.000 59.996	59.764 59.768	60.000 60.015	59.026 59.036	60.000 60.015	59.026 59.036	0.271 0.296	58.268 58.328	59.458 59.443	59.158 59.148	58.539 58.543	58.775 58.771	4H5H
MJ64 × 2	4h6h	62.701 62.691	62.051 62.036	62.589 62.599	62.189 62.204	64.000 63.996	63.720 63.724	64.000 64.015	62.701 62.711	64.000 64.015	62.701 62.711	0.361 0.386	61.691 61.751	63.251 63.236	62.851 62.841	62.051 62.055	62.351 62.347	4H5H
MJ64 × 6	4h6h	60.103 60.090	58.154 58.131	59.923 59.936	58.723 58.746	64.000 63.996	63.400 63.404	64.000 64.023	60.103 60.116	64.000 64.023	60.103 60.116	1.083 1.137	57.072 57.193	61.539 61.516	60.339 60.326	58.154 58.158	58.784 58.780	4H5H
MJ65 × 1.5	4h6h	64.026 64.016	63.539 63.524	63.926 63.936	63.626 63.641	65.000 64.995	64.764 64.769	65.000 65.015	64.026 64.036	65.000 65.015	64.026 64.036	0.271 0.296	63.268 63.328	64.458 64.443	64.158 64.148	63.539 63.543	63.775 63.771	4H5H
MJ70 × 1.5	4h6h	69.026 69.016	68.539 68.524	68.926 68.936	68.626 68.641	70.000 69.995	69.764 69.769	70.000 70.015	69.026 69.036	70.000 70.015	69.026 69.036	0.271 0.296	68.268 68.328	69.458 69.443	69.158 69.148	68.539 68.544	68.775 68.770	4H5H
MJ72 × 2	4h6h	70.701 70.691	70.051 70.036	70.589 70.599	70.189 70.204	72.000 71.995	71.720 71.725	72.000 72.015	70.701 70.711	72.000 72.015	70.701 70.711	0.361 0.386	69.691 69.751	71.251 71.236	70.851 70.841	70.051 70.056	70.351 70.346	4H5H
MJ72 × 6	4h6h	68.103 68.090	66.154 66.131	67.923 67.936	66.723 66.746	72.000 71.995	71.400 71.405	72.000 72.023	68.103 68.116	72.000 72.023	68.103 68.116	1.083 1.137	65.072 65.193	69.539 69.516	68.339 68.326	66.154 66.159	66.784 66.779	4H5H
MJ75 × 1.5	4h6h	74.026 74.016	73.539 73.524	73.926 73.936	73.626 73.641	75.000 74.995	74.764 74.769	75.000 75.015	74.026 74.036	75.000 75.015	74.026 74.036	0.271 0.296	73.268 73.328	74.458 74.443	74.158 74.148	73.539 73.544	73.775 73.770	4H5H
MJ80 × 1.5	4h6h	79.026 79.016	78.539 78.524	78.926 78.936	78.626 78.641	80.000 79.995	79.764 79.769	80.000 80.015	79.026 79.036	80.000 80.015	79.026 79.036	0.271 0.296	78.268 78.328	79.458 79.443	79.158 79.148	78.539 78.544	78.775 78.770	4H5H

Copyright ASME International
Provided by IHS under license with ASME
No reproduction or networking permitted without license from IHS
Not for Resale

TABLE 5 GAGES FOR STANDARD THREAD SERIES METRIC MJ SCREW THREADS — LIMITS OF SIZE (CONT'D)

		Gages for External Threads						Gages for Internal Threads										
		X Thread Gages				Z Plain Gages for Major Diam.		X Thread Gages								Z Plain Gages for Minor Diam.		
		GO		NOT GO				GO		Full-Form GO				NOT GO				
Nominal Size and Pitch	Class	Pitch Diam.	Minor Diam.	Pitch Diam.	Minor Diam.	GO	NOT GO	Major Diam.	Pitch Diam.	Major Diam.	Pitch Diam.	Root Radius	Minor Diam.	Major Diam.	Pitch Diam.	GO	NOT GO	Class
1	2	3	4	5	6	7	8	9	10	11	12	13	14	15	16	17	18	19
mm		mm	mm	mm	mm	mm	mm	mm	mm	mm	mm	mm	mm	mm	mm	mm	mm	
MJ80 × 2	4h6h	78.701 78.691	78.051 78.036	78.589 78.599	78.189 78.204	80.000 79.995	79.720 79.725	80.000 80.015	78.701 78.711	80.000 80.015	78.701 78.711	0.361 0.386	77.691 77.751	79.251 79.236	78.851 78.841	78.051 78.056	78.351 78.346	4H5H
MJ80 × 6	4h6h	76.103 76.090	74.154 74.131	75.923 75.936	74.723 74.746	80.000 79.995	79.400 79.405	80.000 80.023	76.103 76.116	80.000 80.023	76.103 76.116	1.083 1.137	73.072 73.193	77.539 77.516	76.339 76.326	74.154 74.159	74.784 74.779	4H5H
MJ85 × 2	4h6h	83.701 83.691	83.051 83.036	83.589 83.599	83.189 83.204	85.000 84.995	84.720 84.725	85.000 85.015	83.701 83.711	85.000 85.015	83.701 83.711	0.361 0.386	82.691 82.751	84.251 84.236	83.851 83.841	83.051 83.056	83.351 83.346	4H5H
MJ90 × 2	4h6h	88.701 88.691	88.051 88.036	88.589 88.599	88.189 88.204	90.000 89.995	89.720 89.725	90.000 90.015	88.701 88.711	90.000 90.015	88.701 88.711	0.361 0.386	87.691 87.751	89.251 89.236	88.851 88.841	88.051 88.056	88.351 88.346	4H5H
MJ90 × 6	4h6h	86.103 86.090	84.154 84.131	85.923 85.936	84.723 84.746	90.000 89.995	89.400 89.405	90.000 90.023	86.103 86.116	90.000 90.023	86.103 86.116	1.083 1.137	83.072 83.193	87.539 87.516	86.339 86.326	84.154 84.159	84.784 84.779	4H5H
MJ95 × 2	4h6h	93.701 93.691	93.051 93.036	93.583 93.593	93.183 93.198	95.000 94.995	94.720 94.725	95.000 95.015	93.701 93.711	95.000 95.015	93.701 93.711	0.361 0.386	92.691 92.751	94.261 94.246	93.861 93.851	93.051 93.056	93.351 93.346	4H5H
MJ100 × 2	4h6h	98.701 98.691	98.051 98.036	98.583 98.593	98.183 98.198	100.000 99.995	99.720 99.725	100.000 100.015	98.701 98.711	100.000 100.015	98.701 98.711	0.361 0.386	97.691 97.751	99.261 99.246	98.861 98.851	98.051 98.056	98.351 98.346	4H5H
MJ100 × 6	4h6h	96.103 96.090	94.154 94.131	95.913 95.926	94.713 94.736	100.000 99.995	99.400 99.405	100.000 100.023	96.103 96.116	100.000 100.023	96.103 96.116	1.083 1.137	93.072 93.193	97.553 97.530	96.353 96.340	94.154 94.159	94.784 94.779	4H5H
MJ105 × 2	4h6h	103.701 103.686	103.051 103.028	103.583 103.598	103.183 103.206	105.000 104.995	104.720 104.725	105.000 105.023	103.701 103.716	105.000 105.023	103.701 103.716	0.361 0.386	102.691 102.756	104.261 104.238	103.861 103.846	103.051 103.056	103.351 103.346	4H5H
MJ110 × 2	4h6h	108.701 108.686	108.051 108.028	108.583 108.598	108.183 108.206	110.000 109.995	109.720 109.725	110.000 110.023	108.701 108.716	110.000 110.023	108.701 108.716	0.361 0.386	107.691 107.756	109.261 109.238	108.861 108.846	108.051 108.056	108.351 108.346	4H5H
MJ120 × 2	4h6h	118.701 118.686	118.051 118.028	118.583 118.598	118.183 118.206	120.000 119.994	119.720 119.726	120.000 120.023	118.701 118.716	120.000 120.023	118.701 118.716	0.361 0.386	117.691 117.756	119.261 119.238	118.861 118.846	118.051 118.057	118.351 118.345	4H5H
MJ130 × 2	4h6h	128.701 128.686	128.051 128.028	128.583 128.598	128.183 128.206	130.000 129.994	129.720 129.726	130.000 130.023	128.701 128.716	130.000 130.023	128.701 128.716	0.361 0.386	127.691 127.756	129.261 129.238	128.861 128.846	128.051 128.057	128.351 128.345	4H5H
MJ140 × 2	4h6h	138.701 138.686	138.051 138.028	138.583 138.598	138.183 138.206	140.000 139.994	139.720 139.726	140.000 140.023	138.701 138.716	140.000 140.023	138.701 138.716	0.361 0.386	137.691 137.756	139.261 139.238	138.861 138.846	138.051 138.057	138.351 138.345	4H5H
MJ150 × 2	4h6h	148.701 148.686	148.051 148.028	148.583 148.598	148.183 148.206	150.000 149.994	149.720 149.726	150.000 150.023	148.701 148.716	150.000 150.023	148.701 148.716	0.361 0.386	147.691 147.756	149.261 149.238	148.861 148.846	148.051 148.057	148.351 148.345	4H5H
MJ160 × 3	4h6h	158.051 158.036	157.077 157.049	157.911 157.926	157.311 157.339	160.000 159.994	159.625 159.631	160.000 160.028	158.051 158.066	160.000 160.028	158.051 158.066	0.541 0.566	156.535 156.600	158.841 158.813	158.241 158.226	157.077 157.083	157.477 157.471	4H5H

Copyright ASME International
Provided by IHS under license with ASME
No reproduction or networking permitted without license from IHS
Not for Resale

Not for Resale

Copyright ASME International
Provided by IHS under license with ASME
No reproduction or networking permitted without license from IHS

TABLE 5 GAGES FOR STANDARD THREAD SERIES METRIC MJ SCREW THREADS — LIMITS OF SIZE (CONT'D)

	Gages for External Threads							Gages for Internal Threads										
		X Thread Gages				Z Plain Gages for Major Diam.		X Thread Gages								Z Plain Gages for Minor Diam.		
		GO		NOT GO				GO		Full-Form GO				NOT GO				
Nominal Size and Pitch	Class	Pitch Diam.	Minor Diam.	Pitch Diam.	Minor Diam.	GO	NOT GO	Major Diam.	Pitch Diam.	Major Diam.	Pitch Diam.	Root Radius	Minor Diam.	Major Diam.	Pitch Diam.	GO	NOT GO	Class
1	2	3	4	5	6	7	8	9	10	11	12	13	14	15	16	17	18	19
mm		mm	mm	mm	mm	mm	mm	mm	mm	mm	mm	mm	mm	mm	mm	mm	mm	
MJ170 × 3	4h6h	168.051 168.036	167.077 167.049	167.911 167.926	167.311 167.339	170.000 169.992	169.625 169.633	170.000 170.028	168.051 168.066	170.000 170.028	168.051 168.066	0.541 0.566	166.535 166.600	168.841 168.813	168.241 168.226	167.077 167.085	167.477 167.469	4H5H
MJ180 × 3	4h6h	178.051 178.036	177.077 177.049	177.911 177.926	177.311 177.339	180.000 179.992	179.625 179.633	180.000 180.028	178.051 178.066	180.000 180.028	178.051 178.066	0.541 0.566	176.535 176.600	178.841 178.813	178.241 178.226	177.077 177.085	177.477 177.469	4H5H
MJ190 × 3	4h6h	188.051 188.036	187.077 187.049	187.891 187.906	187.291 187.319	190.000 189.992	189.625 189.633	190.000 190.028	188.051 188.066	190.000 190.028	188.051 188.066	0.541 0.566	186.535 186.600	188.863 188.835	188.263 188.248	187.077 187.085	187.477 187.469	4H5H
MJ200 × 3	4h6h	198.051 198.036	197.077 197.049	197.891 197.906	197.291 197.319	200.000 199.992	199.625 199.633	200.000 200.028	198.051 198.066	200.000 200.028	198.051 198.066	0.541 0.566	196.535 196.600	198.863 198.835	198.263 198.248	197.077 197.085	197.477 197.469	4H5H

4.4.7 Pitch Cylinder. The pitch cylinder of the threaded portion of the GO segments or rolls shall be straight and round within the X gage pitch diameter limits specified.

4.4.8 Lead, Pitch, and Half-Angle Variations. Lead, pitch, and half-angle variations shall be within the limits specified (see Table 9).

4.4.9 Identification. The assembled gage should be marked with the metric nominal size, ×, pitch-tolerance class, GO, PD, and pitch diameter in millimeters.

EXAMPLE:
MJ8×1-4H5H GO PD7.350

ANSI/ASME B1.16M GO snap gages are interchangeable with MJ thread gages for the same class of thread.

4.5 Thread Snap Gages — NOT GO Segments or Rolls (Table 2 — Gages 2.2 and 2.4)

4.5.1 Purpose and Use. The thread snap gage with two NOT GO segments or two NOT GO rolls inspects the NOT GO functional diameter limit B_1 of product internal thread. The setting of the NOT GO segments or rolls represents the maximum functional diameter limit of the product internal thread. In applying the thread snap limit gage, the NOT GO functional diameter limit is acceptable when gaging elements do not pass the product thread.

Internal thread snap gages by design must have the outside diameter of gaging elements below the minor diameter of internal thread in order to enter. The gage checks the NOT GO functional diameter limit by sensing the resistance at contact after being set to a master.

The NOT GO thread snap gage can indicate out-of-roundness of the pitch cylinder for 180 deg. ovality by using the gage at different diametral locations on the internal thread.

The NOT GO thread snap gage can check taper of the pitch cylinder by using the gage at different locations axially on the internal thread.

4.5.2 Basic Design. In order that the NOT GO thread snap gage may effectively check the NOT GO functional diameter limit, the flank contact is reduced by truncating the thread on segments and rolls. Since the design of the segments and rolls are different with each gage manufacturer, the number of pitches engaged in product thread will vary. Usually, the number of pitches engaged is approximately two. Internal product threads less than 3 mm in diameter are not practical to check with snap gages.

4.5.3 Thread Form. The specifications for thread form are summarized in Table 7 and Fig. 6.

4.5.4 Thread Crests. The maximum major diameter of the NOT GO segments and rolls shall be equal to the pitch diameter of the segment or roll plus $0.2P$ with the gage tolerance minus. This corresponds to a width of flat at the crest equal to $0.385P$ (see Table 7).

4.5.5 Thread Roots. The minor diameter of the NOT GO segments and rolls shall be cleared beyond a $P/8$ width of flat by an extension toward a sharp vee of the sides of the thread or by an undercut to any dimension no wider than $P/4$. The undercut is to be approximately central with the center line of the thread groove (see Fig. 6).

4.5.6 Runout. The pitch and major cylinders of the threaded portion of the NOT GO segments or rolls shall not exceed the runout as determined by measurements of runout (full-indicator movement) on each gaging member, with respect to the pitch cylinder. Runout shall not exceed the X gage major diameter tolerance.

4.5.7 Pitch Cylinder. The pitch cylinder of the threaded portion of the NOT GO segments or rolls shall be round within the X gage pitch diameter limits specified.

4.5.8 Lead, Pitch, and Half-Angle Variations. Lead, pitch, and half-angle variations shall be within the limits specified (see Table 9).

4.5.9 Identification. The assembled gage should be marked with the metric nominal size, ×, pitch-tolerance class, NOT GO, PD, and pitch diameter in millimeters.

EXAMPLE:
MJ8×1-4H5H NOT GO PD7.445

ANSI/ASME B1.16M HI snap gages are interchangeable with MJ thread gages for the same class of thread.

4.6 Thread Snap Gages — Minimum Material: Pitch Diameter Cone and Vee (Table 2 — Gage 2.5)

4.6.1 Purpose and Use. The thread snap gage with two segments or two rolls, both made to cone and vee design as shown in Fig. 7, inspects the minimum-material limit pitch diameter C_1 of the product internal thread.

Internal thread snap gages by design must have outside diameter of gaging elements below minor diameter of internal thread in order to enter. The gage checks the minimum-material PD limit by sensing the resistance at contact after being set to a master.

Copyright ASME International
Provided by IHS under license with ASME
No reproduction or networking permitted without license from IHS

Not for Resale

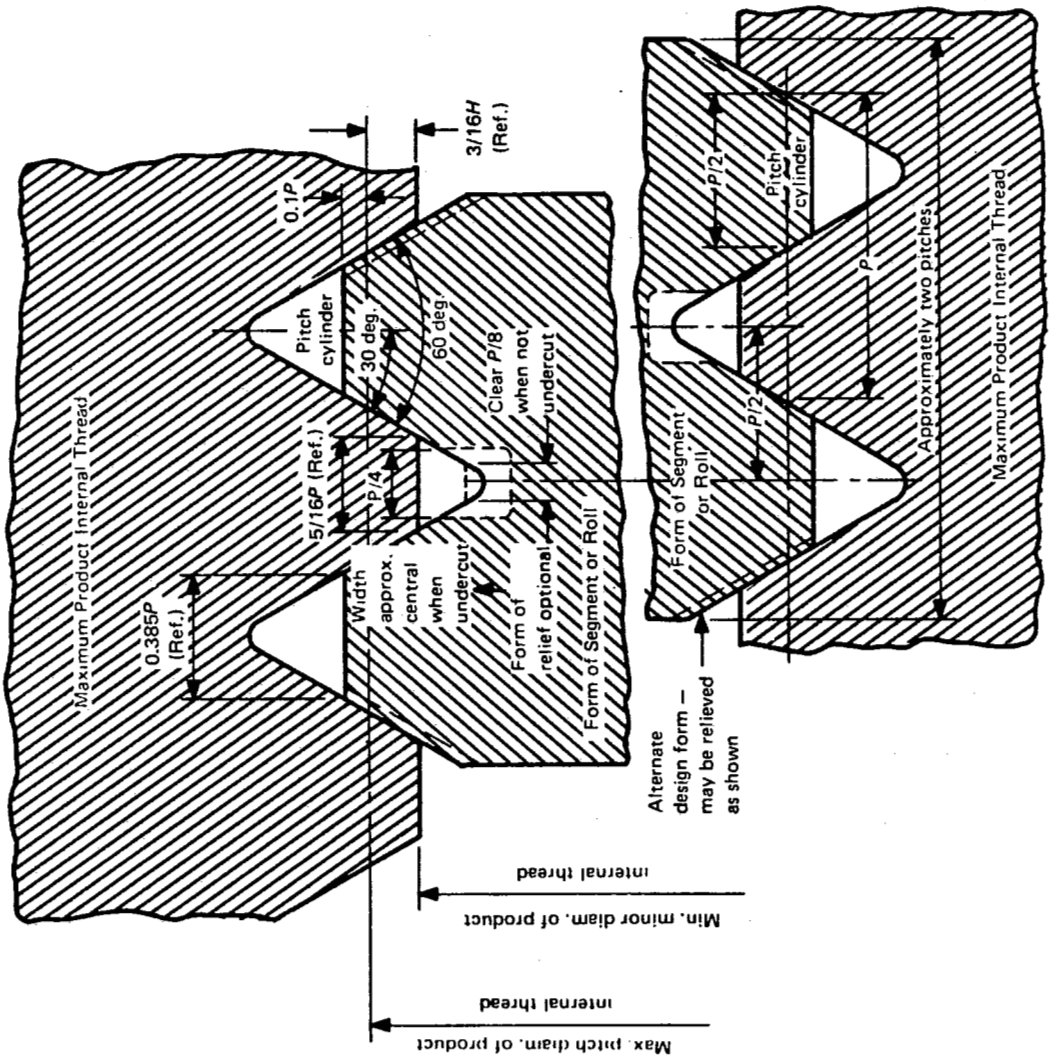

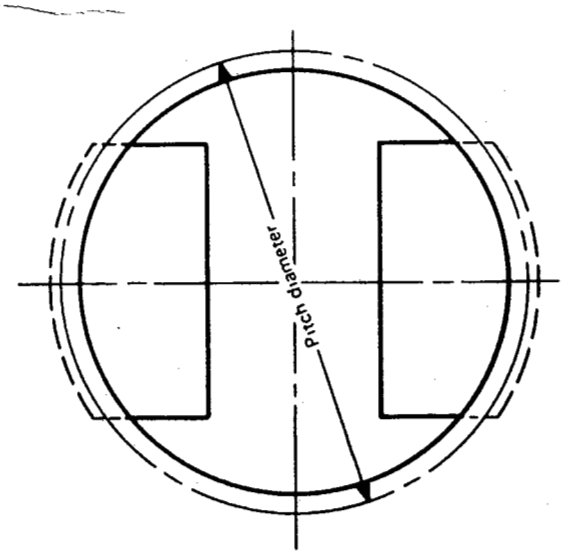

NOT GO Threaded Segments

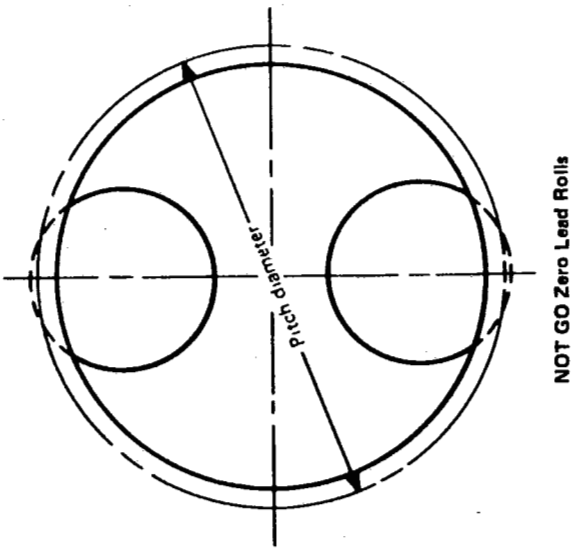

NOT GO Zero Lead Rolls

FIG. 6 THREAD SNAP GAGES — NOT GO FUNCTIONAL DIAMETER LIMIT
(Ref. Table 2 — Column B_1)

Copyright ASME International
Provided by IHS under license with ASME
No reproduction or networking permitted without license from IHS

Not for Resale

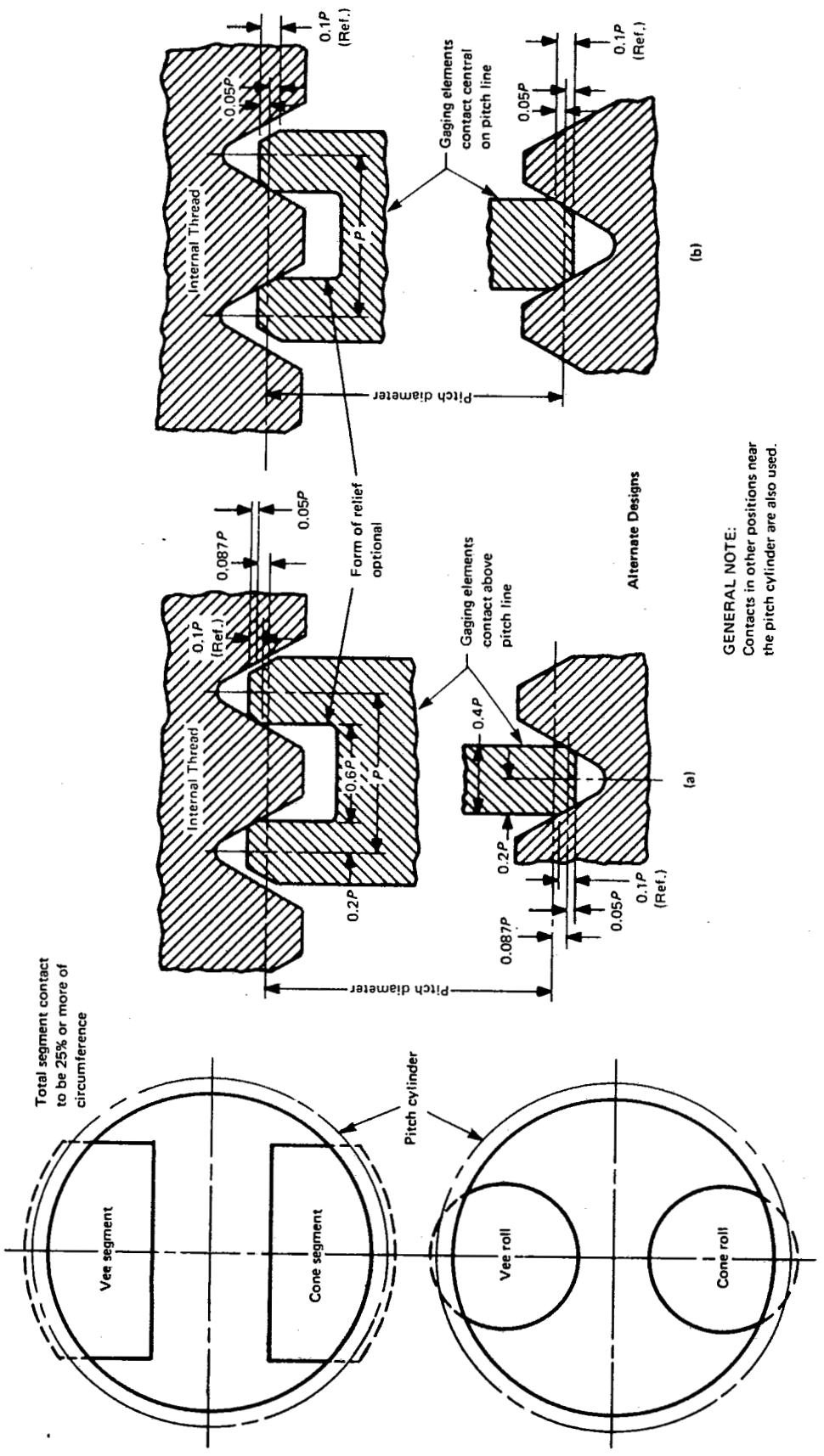

GENERAL NOTE:
Contacts in other positions near the pitch cylinder are also used.

FIG. 7 THREAD SNAP GAGES — MINIMUM-MATERIAL PITCH DIAMETER LIMIT — CONE AND VEE (Ref. Table 2 — Column C_1)

Not for Resale

Copyright ASME International
Provided by IHS under license with ASME
No reproduction or networking permitted without license from IHS

TABLE 6 SETTING GAGES FOR STANDARD SERIES METRIC MJ SCREW THREADS — LIMITS OF SIZE

Nominal Size and Pitch	W Thread-Setting Plugs							W Thread-Setting Rings				
		GO			NOT GO			GO		NOT GO		
		Major Diam.		Pitch Diam.	Major Diam.		Pitch Diam.	Pitch Diam.	Minor Diam.	Pitch Diam.	Minor Diam.	Class
	Class	Truncated	Full		Truncated	Full						
1	2	3	4	5	6	7	8	9	10	11	12	13
mm		mm	mm	mm	mm	mm	mm	mm	mm	mm	mm	
MJ1.6 × 0.35	4h6h	1.443 1.435	1.600 1.608	1.373 1.370	1.403 1.395	1.592 1.584	1.333 1.336	... ...	... ...	... ...	... ...	...
MJ2 × 0.4	4h6h	1.820 1.812	2.000 2.008	1.740 1.737	1.778 1.770	2.001 1.993	1.698 1.701	... ...	... ...	... ...	... ...	...
MJ2.5 × 0.45	4h6h	2.298 2.290	2.500 2.508	2.208 2.205	2.253 2.245	2.508 2.500	2.163 2.166	... ...	... ...	... ...	... ...	...
MJ3 × 0.5	4h6h	2.775 2.767	3.000 3.008	2.675 2.672	2.727 2.719	3.008 3.000	2.627 2.630	... ...	... ...	... ...	... ...	...
MJ3.5 × 0.6	4h6h	3.230 3.222	3.500 3.508	3.110 3.107	3.177 3.169	3.508 3.500	3.057 3.060	... ...	... ...	... ...	... ...	...
MJ4 × 0.7	4h6h	3.685 3.677	4.000 4.008	3.545 3.542	3.629 3.621	4.008 4.000	3.489 3.492	... ...	... ...	... ...	... ...	...
MJ5 × 0.8	4h6h	4.640 4.632	5.000 5.008	4.480 4.477	4.580 4.572	5.008 5.000	4.420 4.423	4.480 4.483	4.221 4.213	4.560 4.557	4.421 4.413	4H6H
MJ6 × 1	4h6h	5.550 5.537	6.000 6.013	5.350 5.347	5.479 5.466	6.013 6.000	5.279 5.282	5.350 5.353	5.026 5.013	5.445 5.442	5.216 5.203	4H5H
MJ7 × 1	4h6h	6.550 6.537	7.000 7.013	6.350 6.347	6.479 6.466	7.013 7.000	6.279 6.282	6.350 6.353	6.026 6.013	6.445 6.442	6.216 6.203	4H5H
MJ8 × 1	4h6h	7.550 7.537	8.000 8.013	7.350 7.347	7.479 7.466	8.013 8.000	7.279 7.282	7.350 7.353	7.026 7.013	7.445 7.442	7.216 7.203	4H5H
MJ8 × 1.25	4h6h	7.438 7.425	8.000 8.013	7.188 7.185	7.363 7.350	8.013 8.000	7.113 7.116	7.188 7.191	6.782 6.769	7.288 7.285	6.994 6.981	4H5H
MJ10 × 0.75	4h6h	9.663 9.655	10.000 10.008	9.513 9.510	9.600 9.592	10.008 10.000	9.450 9.453	9.513 9.516	9.269 9.261	9.598 9.595	9.419 9.411	4H5H

Copyright ASME International
Provided by IHS under license with ASME
No reproduction or networking permitted without license from IHS
Not for Resale

TABLE 6 SETTING GAGES FOR STANDARD SERIES METRIC MJ SCREW THREADS — LIMITS OF SIZE (CONT'D)

		W Thread-Setting Plugs						W Thread-Setting Rings				
		GO			NOT GO			GO		NOT GO		
		Major Diam.			Major Diam.							
Nominal Size and Pitch	Class	Truncated	Full	Pitch Diam.	Truncated	Full	Pitch Diam.	Pitch Diam.	Minor Diam.	Pitch Diam.	Minor Diam.	Class
1	2	3	4	5	6	7	8	9	10	11	12	13
mm		mm	mm	mm	mm	mm	mm	mm	mm	mm	mm	
MJ10 × 1.25	4h6h	9.438 9.425	10.000 10.013	9.188 9.185	9.363 9.350	10.013 10.000	9.113 9.116	9.188 9.191	8.782 8.769	9.288 9.285	8.994 8.981	4H5H
MJ10 × 1.5	4h6h	9.326 9.313	10.000 10.013	9.026 9.023	9.241 9.228	10.013 10.000	8.941 8.944	9.026 9.029	8.539 8.526	9.138 9.135	8.775 8.762	4H5H
MJ11 × 1.25	4h6h	10.438 10.425	11.000 11.013	10.188 10.185	10.363 10.350	11.013 11.000	10.113 10.116	10.188 10.191	9.782 9.769	10.288 10.285	9.994 9.981	4H5H
MJ12 × 1	4h6h	11.550 11.537	12.000 12.013	11.350 11.347	11.475 11.462	12.013 12.000	11.275 11.278	11.350 11.353	11.026 11.013	11.450 11.447	11.216 11.203	4H5H
MJ12 × 1.25	4h6h	11.438 11.425	12.000 12.013	11.188 11.185	11.353 11.340	12.013 12.000	11.103 11.106	11.188 11.191	10.782 10.769	11.300 11.297	10.994 10.981	4H5H
MJ12 × 1.75	4h6h	11.213 11.198	12.000 12.015	10.863 10.860	11.118 11.103	12.015 12.000	10.768 10.771	10.863 10.866	10.295 10.280	10.988 10.985	10.560 10.545	4H5H
MJ14 × 1.5	4h6h	13.326 13.313	14.000 14.013	13.026 13.022	13.236 13.223	14.013 14.000	12.936 12.940	13.026 13.030	12.539 12.526	13.144 13.140	12.775 12.762	4H5H
MJ14 × 2	4h6h	13.101 13.086	14.000 14.015	12.701 12.696	13.001 12.986	14.015 14.000	12.601 12.606	12.701 12.706	12.051 12.036	12.833 12.828	12.351 12.336	4H5H
MJ15 × 1	4h6h	14.550 14.537	15.000 15.013	14.350 14.346	14.475 14.462	15.013 15.000	14.275 14.279	14.350 14.354	14.026 14.013	14.450 14.446	14.216 14.203	4H5H
MJ16 × 1.5	4h6h	15.326 15.313	16.000 16.013	15.026 15.022	15.236 15.223	16.013 16.000	14.936 14.940	15.026 15.030	14.539 14.526	15.144 15.140	14.775 14.762	4H5H
MJ16 × 2	4h6h	15.101 15.086	16.000 16.015	14.701 14.696	15.001 14.986	16.015 16.000	14.601 14.606	14.701 14.706	14.051 14.036	14.833 14.828	14.351 14.336	4H5H
MJ17 × 1	4h6h	16.550 16.537	17.000 17.013	16.350 16.346	16.475 16.462	17.013 17.000	16.275 16.279	16.350 16.354	16.026 16.013	16.450 16.446	16.216 16.203	4H5H

Copyright ASME International
Provided by IHS under license with ASME
No reproduction or networking permitted without license from IHS
Not for Resale

TABLE 6 SETTING GAGES FOR STANDARD SERIES METRIC MJ SCREW THREADS — LIMITS OF SIZE (CONT'D)

Nominal Size and Pitch	Class	W Thread-Setting Plugs						W Thread-Setting Rings				
		GO			NOT GO			GO		NOT GO		
		Major Diam.		Pitch Diam.	Major Diam.		Pitch Diam.	Pitch Diam.	Minor Diam.	Pitch Diam.	Minor Diam.	Class
		Truncated	Full		Truncated	Full						
1	2	3	4	5	6	7	8	9	10	11	12	13
mm		mm	mm	mm	mm	mm	mm	mm	mm	mm	mm	
MJ18 × 1.5	4h6h	17.326 17.313	18.000 18.013	17.026 17.022	17.236 17.223	18.013 18.000	16.936 16.940	17.026 17.030	16.539 16.526	17.144 17.140	16.775 16.762	4H5H
MJ20 × 1	4h6h	19.550 19.537	20.000 20.013	19.350 19.346	19.475 19.462	20.013 20.000	19.275 19.279	19.350 19.354	19.026 19.013	19.450 19.446	19.216 19.203	4H5H
MJ20 × 1.5	4h6h	19.326 19.313	20.000 20.013	19.026 19.022	19.236 19.223	20.013 20.000	18.936 18.940	19.026 19.030	18.539 18.526	19.144 19.140	18.775 18.762	4H5H
MJ20 × 2.5	4h6h	18.876 18.861	20.000 20.015	18.376 18.371	18.770 18.755	20.015 20.000	18.270 18.275	18.376 18.381	17.564 17.549	18.516 18.511	17.919 17.904	4H5H
MJ22 × 1.5	4h6h	21.326 21.313	22.000 22.013	21.026 21.022	21.236 21.223	22.013 22.000	20.936 20.940	21.026 21.030	20.539 20.526	21.144 21.140	20.775 20.762	4H5H
MJ24 × 2	4h6h	23.101 23.086	24.000 24.015	22.701 22.696	22.995 22.980	24.015 24.000	22.595 22.600	22.701 22.706	22.051 22.036	22.841 22.836	22.351 22.336	4H5H
MJ24 × 3	4h6h	22.651 22.636	24.000 24.015	22.051 22.046	22.526 22.511	24.015 24.000	21.926 21.931	22.051 22.056	21.077 21.062	22.221 22.216	21.477 21.462	4H5H
MJ25 × 1.5	4h6h	24.326 24.313	25.000 25.013	24.026 24.022	24.231 24.218	25.013 25.000	23.931 23.935	24.026 24.030	23.539 23.526	24.151 24.147	23.775 23.762	4H5H
MJ27 × 2	4h6h	26.101 26.086	27.000 27.015	25.701 25.696	25.995 25.980	27.015 27.000	25.595 25.600	25.701 25.706	25.051 25.036	25.841 25.836	25.351 25.336	4H5H
MJ30 × 1.5	4h6h	29.326 29.313	30.000 30.013	29.026 29.022	29.231 29.218	30.013 30.000	28.931 28.935	29.026 29.030	28.539 28.526	29.151 29.147	28.775 28.762	4H5H
MJ30 × 2	4h6h	29.101 29.086	30.000 30.015	28.701 28.696	28.995 28.980	30.015 30.000	28.595 28.600	28.701 28.706	28.051 28.036	28.841 28.836	28.351 28.336	4H5H
MJ30 × 3.5	4h6h	28.427 28.409	30.000 30.018	27.727 27.722	28.295 28.277	30.018 30.000	27.595 27.600	27.727 27.732	26.590 26.572	27.907 27.902	27.040 27.022	4H5H

Copyright ASME International
Provided by IHS under license with ASME
No reproduction or networking permitted without license from IHS
Not for Resale

TABLE 6 SETTING GAGES FOR STANDARD SERIES METRIC MJ SCREW THREADS — LIMITS OF SIZE (CONT'D)

Nominal Size and Pitch	Class	W Thread-Setting Plugs						W Thread-Setting Rings				
		GO			NOT GO			GO		NOT GO		
		Major Diam.		Pitch Diam.	Major Diam.		Pitch Diam.	Pitch Diam.	Minor Diam.	Pitch Diam.	Minor Diam.	Class
		Truncated	Full		Truncated	Full						
1	2	3	4	5	6	7	8	9	10	11	12	13
mm		mm	mm	mm	mm	mm	mm	mm	mm	mm	mm	
MJ33 × 2	4h6h	32.101 32.086	33.000 33.015	31.701 31.696	31.995 31.980	33.015 33.000	31.595 31.600	31.701 31.706	31.051 31.036	31.841 31.836	31.351 31.336	4H5H
MJ35 × 1.5	4h6h	34.326 34.313	35.000 35.013	34.026 34.022	34.231 34.218	35.013 35.000	33.931 33.935	34.026 34.030	33.539 33.526	34.151 34.147	33.775 33.762	4H5H
MJ36 × 2	4h6h	35.101 35.086	36.000 36.015	34.701 34.696	34.995 34.980	36.015 36.000	34.595 34.600	34.701 34.706	34.051 34.036	34.841 34.836	34.351 34.336	4H5H
MJ36 × 4	4h6h	34.202 34.184	36.000 36.018	33.402 33.397	34.062 34.044	36.018 36.000	33.262 33.267	33.402 33.407	32.103 32.085	33.592 33.587	32.578 32.560	4H5H
MJ39 × 2	4h6h	38.101 38.086	39.000 39.015	37.701 37.696	37.995 37.980	39.015 39.000	37.595 37.600	37.701 37.706	37.051 37.036	37.841 37.836	37.351 37.336	4H5H
MJ40 × 1.5	4h6h	39.326 39.313	40.000 40.013	39.026 39.021	39.231 39.218	40.013 40.000	38.931 38.936	39.026 39.031	38.539 38.526	39.151 39.146	38.775 38.762	4H5H
MJ42 × 2	4h6h	41.101 41.086	42.000 42.015	40.701 40.695	40.995 40.980	42.015 42.000	40.595 40.601	40.701 40.707	40.051 40.036	40.841 40.835	40.351 40.336	4H5H
MJ42 × 4.5	4h6h	39.977 39.957	42.000 42.020	39.077 39.071	39.827 39.807	42.020 42.000	38.927 38.933	39.077 39.083	37.616 37.596	39.277 39.271	38.146 38.126	4H5H
MJ45 × 1.5	4h6h	44.326 44.313	45.000 45.013	44.026 44.021	44.231 44.218	45.013 45.000	43.931 43.936	44.026 44.031	43.539 43.526	44.151 44.146	43.775 43.762	4H5H
MJ48 × 2	4h6h	47.101 47.086	48.000 48.015	46.701 46.695	46.989 46.974	48.015 48.000	46.589 46.595	46.701 46.707	46.051 46.036	46.851 46.845	46.351 46.336	4H5H
MJ48 × 5	4h6h	45.752 45.732	48.000 48.020	44.752 44.746	45.592 45.572	48.020 48.000	44.592 44.598	44.752 44.758	43.129 43.109	44.964 44.958	43.689 43.669	4H5H
MJ50 × 1.5	4h6h	49.326 49.313	50.000 50.013	49.026 49.021	49.226 49.213	50.013 50.000	48.926 48.931	49.026 49.031	48.539 48.526	49.158 49.153	48.775 48.762	4H5H

Copyright ASME International
Provided by IHS under license with ASME
No reproduction or networking permitted without license from IHS
Not for Resale

TABLE 6 SETTING GAGES FOR STANDARD SERIES METRIC MJ SCREW THREADS — LIMITS OF SIZE (CONT'D)

Nominal Size and Pitch	Class	W Thread-Setting Plugs						W Thread-Setting Rings				
		GO			NOT GO			GO		NOT GO		
		Major Diam.		Pitch Diam.	Major Diam.		Pitch Diam.	Pitch Diam.	Minor Diam.	Pitch Diam.	Minor Diam.	Class
		Truncated	Full		Truncated	Full						
1	2	3	4	5	6	7	8	9	10	11	12	13
mm		mm	mm	mm	mm	mm	mm	mm	mm	mm	mm	
MJ55 × 1.5	4h6h	54.326 54.313	55.000 55.013	54.026 54.021	54.226 54.213	55.013 55.000	53.926 53.931	54.026 54.031	53.539 53.526	54.158 54.153	53.775 53.762	4H5H
MJ56 × 2	4h6h	55.101 55.086	56.000 56.015	54.701 54.695	54.989 54.974	56.015 56.000	54.589 54.595	54.701 54.707	54.051 54.036	54.851 54.845	54.351 54.336	4H5H
MJ56 × 5.5	4h6h	53.528 53.508	56.000 56.020	52.428 52.422	53.358 53.338	56.020 56.000	52.258 52.264	52.428 52.434	50.641 50.621	52.652 52.646	51.241 51.221	4H5H
MJ60 × 1.5	4h6h	59.326 59.313	60.000 60.013	59.026 59.021	59.226 59.213	60.013 60.000	58.926 58.931	59.026 59.031	58.539 58.526	59.158 59.153	58.775 58.762	4H5H
MJ64 × 2	4h6h	63.101 63.086	64.000 64.015	62.701 62.695	62.989 62.974	64.015 64.000	62.589 62.595	62.701 62.707	62.051 62.036	62.851 62.845	62.351 62.336	4H5H
MJ64 × 6	4h6h	61.303 61.280	64.000 64.023	60.103 60.097	61.123 61.100	64.023 64.000	59.923 59.929	60.103 60.109	58.154 58.131	60.339 60.333	58.784 58.761	4H5H
MJ65 × 1.5	4h6h	64.326 64.313	65.000 65.013	64.026 64.021	64.226 64.213	65.013 65.000	63.926 63.931	64.026 64.031	63.539 63.526	64.158 64.153	63.775 63.762	4H5H
MJ70 × 1.5	4h6h	69.326 69.313	70.000 70.013	69.026 69.021	69.226 69.213	70.013 70.000	68.926 68.931	69.026 69.031	68.539 68.526	69.158 69.153	68.775 68.762	4H5H
MJ72 × 2	4h6h	71.101 71.086	72.000 72.015	70.701 70.695	70.989 70.974	72.015 72.000	70.589 70.595	70.701 70.707	70.051 70.036	70.851 70.845	70.351 70.336	4H5H
MJ72 × 6	4h6h	69.303 69.280	72.000 72.023	68.103 68.097	69.123 69.100	72.023 72.000	67.923 67.929	68.103 68.109	66.154 66.131	68.339 68.333	66.784 66.761	4H5H
MJ75 × 1.5	4h6h	74.326 74.313	75.000 75.013	74.026 74.021	74.226 74.213	75.013 75.000	73.926 73.931	74.026 74.031	73.539 73.526	74.158 74.153	73.775 73.762	4H5H
MJ80 × 1.5	4h6h	79.326 79.313	80.000 80.013	79.026 79.021	79.226 79.213	80.013 80.000	78.926 78.931	79.026 79.031	78.539 78.526	79.158 79.153	78.775 78.762	4H5H

Copyright ASME International
Provided by IHS under license with ASME
No reproduction or networking permitted without license from IHS
Not for Resale

TABLE 6 SETTING GAGES FOR STANDARD SERIES METRIC MJ SCREW THREADS — LIMITS OF SIZE (CONT'D)

Nominal Size and Pitch	Class	W Thread-Setting Plugs						W Thread-Setting Rings				
		GO			NOT GO			GO		NOT GO		
		Major Diam.		Pitch Diam.	Major Diam.		Pitch Diam.	Pitch Diam.	Minor Diam.	Pitch Diam.	Minor Diam.	Class
		Truncated	Full		Truncated	Full						
1	2	3	4	5	6	7	8	9	10	11	12	13
mm		mm	mm	mm	mm	mm	mm	mm	mm	mm	mm	
MJ80 × 2	4h6h	79.101 79.086	80.000 80.015	78.701 78.695	78.989 78.974	80.015 80.000	78.589 78.595	78.701 78.707	78.051 78.036	78.851 78.845	78.351 78.336	4H5H
MJ80 × 6	4h6h	77.303 77.280	80.000 80.023	76.103 76.097	77.123 77.100	80.023 80.000	75.923 75.929	76.103 76.109	74.154 74.131	76.339 76.333	74.784 74.761	4H5H
MJ85 × 2	4h6h	84.101 84.086	85.000 85.015	83.701 83.695	83.989 83.974	85.015 85.000	83.589 83.595	83.701 83.707	83.051 83.036	83.851 83.845	83.351 83.336	4H5H
MJ90 × 2	4h6h	89.101 89.086	90.000 90.015	88.701 88.695	88.989 88.974	90.015 90.000	88.589 88.595	88.701 88.707	88.051 88.036	88.851 88.845	88.351 88.336	4H5H
MJ90 × 6	4h6h	87.303 87.280	90.000 90.023	86.103 86.097	87.123 87.100	90.023 90.000	85.923 85.929	86.103 86.109	84.154 84.131	86.339 86.333	84.784 84.761	4H5H
MJ95 × 2	4h6h	94.101 94.086	95.000 95.015	93.701 93.695	93.983 93.968	95.015 95.000	93.583 93.589	93.701 93.707	93.051 93.036	93.861 93.855	93.351 93.336	4H5H
MJ100 × 2	4h6h	99.101 99.086	100.000 100.015	98.701 98.695	98.983 98.960	100.015 100.000	98.583 98.589	98.701 98.707	98.051 98.036	98.861 98.855	98.351 98.336	4H5H
MJ100 × 6	4h6h	97.303 97.280	100.000 100.023	96.103 96.097	97.113 97.090	100.023 100.000	95.913 95.919	96.103 96.109	94.154 94.131	96.353 96.347	94.784 94.761	4H5H
MJ105 × 2	4h6h	104.101 104.078	105.000 105.023	103.701 103.693	103.983 103.960	105.023 105.000	103.583 103.591	103.701 103.709	103.051 103.028	103.861 103.853	103.351 103.328	4H5H
MJ110 × 2	4h6h	109.101 109.078	110.000 110.023	108.701 108.693	108.983 108.960	110.023 110.000	108.583 108.591	108.701 108.709	108.051 108.028	108.861 108.853	108.351 108.328	4H5H
MJ120 × 2	4h6h	119.101 119.078	120.000 120.023	118.701 118.693	118.983 118.960	120.023 120.000	118.583 118.591	118.701 118.709	118.051 118.028	118.861 118.853	118.351 118.328	4H5H
MJ130 × 2	4h6h	129.101 129.078	130.000 130.023	128.701 128.693	128.983 128.960	130.023 130.000	128.583 128.591	128.701 128.709	128.051 128.028	128.861 128.853	128.351 128.328	4H5H

Copyright ASME International
Provided by IHS under license with ASME
No reproduction or networking permitted without license from IHS
Not for Resale

TABLE 6 SETTING GAGES FOR STANDARD SERIES METRIC MJ SCREW THREADS — LIMITS OF SIZE (CONT'D)

Nominal Size and Pitch	Class	W Thread-Setting Plugs						W Thread-Setting Rings				
		GO			NOT GO			GO		NOT GO		
		Major Diam.		Pitch Diam.	Major Diam.		Pitch Diam.	Pitch Diam.	Minor Diam.	Pitch Diam.	Minor Diam.	Class
		Truncated	Full		Truncated	Full						
1	2	3	4	5	6	7	8	9	10	11	12	13
mm		mm	mm	mm	mm	mm	mm	mm	mm	mm	mm	
MJ140 × 2	4h6h	139.101 139.078	140.000 140.023	138.701 138.693	138.983 138.960	140.023 140.000	138.583 138.591	138.701 138.709	138.051 138.028	138.861 138.853	138.351 138.328	4H5H
MJ150 × 2	4h6h	149.101 149.078	150.000 150.023	148.701 148.693	148.983 148.960	150.023 150.000	148.583 148.591	148.701 148.709	148.051 148.028	148.861 148.853	148.351 148.328	4H5H
MJ160 × 3	4h6h	158.651 158.628	160.000 160.023	158.051 158.043	158.511 158.488	160.023 160.000	157.911 157.919	158.051 158.059	157.077 157.054	158.241 158.233	157.477 157.454	4H5H
MJ170 × 3	4h6h	168.651 168.628	170.000 170.023	168.051 168.043	168.511 168.488	170.023 170.000	167.911 167.919	168.051 168.059	167.077 167.054	168.241 168.233	167.477 167.454	4H5H
MJ180 × 3	4h6h	178.651 178.628	180.000 180.023	178.051 178.043	178.511 178.488	180.023 180.000	177.911 177.919	178.051 178.059	177.077 177.054	178.241 178.233	177.477 177.454	4H5H
MJ190 × 3	4h6h	188.651 188.628	190.000 190.023	188.051 188.043	188.491 188.468	190.023 190.000	187.891 187.899	188.051 188.059	187.077 187.054	188.263 188.255	187.477 187.454	4H5H
MJ200 × 3	4h6h	198.651 198.628	200.000 200.023	198.051 198.043	198.491 198.468	200.023 200.000	197.891 197.899	198.051 198.059	197.077 197.054	198.263 198.255	197.477 197.454	4H5H

Copyright ASME International
Provided by IHS under license with ASME
No reproduction or networking permitted without license from IHS
Not for Resale

TABLE 7 SPECIFICATIONS AND FORMAT FOR TABLE 5 — LIMITS OF SIZE OF THREADED AND PLAIN GAGES FOR METRIC MJ EXTERNAL AND INTERNAL THREADS

Nominal Size and Pitch				1	(To be specified)
Series Designation and Tolerance Class				2	Of external thread to be checked
Gages for External Threads	Thread gages	GO	Pitch diameter	3	Max. pitch diameter of external thread; gage tolerance minus
			Minor diameter	4	Max. pitch diameter of internal thread minus 0.375*H*; gage tolerance minus
		NOT GO	Pitch diameter	5	Min. pitch diameter of external thread; gage tolerance plus
			Minor diameter	6	Min. pitch diameter of external thread minus 0.2*P*; gage tolerance plus
	Plain gages for major diameter	GO		7	Max. major diameter of external thread; gage tolerance minus
		NOT GO		8	Min. major diameter of external thread; gage tolerance plus
Gages for Internal Threads	Thread gages	GO	Major diameter	9	Min. major diameter of internal thread; gage tolerance plus
			Pitch diameter	10	Min. pitch diameter of internal thread; gage tolerance plus
		Full-form GO	Major diameter	11	Same as row 9 above
			Pitch diameter	12	Same as row 10 above
			Root radius	13	Max. root radius of external J thread (0.18042*P*); gage tolerance (*t* in Table 4, column 6) plus
			Minor diameter	14	Min. equals min. gage pitch diameter minus two times max. dedendum (0.50518*P*). Max. equals min. minor diameter plus X gage pitch diameter tolerance plus radius tolerance factor *T* (see Table 4, column 7).
		NOT GO	Major diameter	15	Max. pitch diameter of internal thread plus 0.2*P*; gage tolerance minus
			Pitch diameter	16	Max. pitch diameter of internal thread; gage tolerance minus
	Plain gages for minor diameter	GO		17	Min. minor diameter of internal thread; gage tolerance plus
		NOT GO		18	Max. minor diameter of internal thread; gage tolerance minus
Series Designation and Tolerance Class				19	Of internal thread to be checked

Copyright ASME International
Provided by IHS under license with ASME
No reproduction or networking permitted without license from IHS

Not for Resale

TABLE 8 SPECIFICATIONS AND FORMAT FOR TABLE 6 — LIMITS OF SIZE OF THREAD-SETTING GAGES FOR METRIC MJ THREAD-WORKING GAGES

Nominal Size and Pitch				1	(To be specified)
Tolerance Class				2	Of external thread to be checked by gage set with plug
Full-Form and Truncated Setting Plugs	Plug for GO	Major diameter	Truncated*	3	Max. pitch diameter of external thread plus 0.2*P*; gage tolerance minus
			Full-form	4	Max. major diameter of external thread; gage tolerance plus
		Pitch diameter		5	Max. pitch diameter of external thread; gage tolerance minus
	Plug for NOT GO	Major diameter	Truncated* [Note (1)]	6	Min. pitch diameter of external thread plus 0.2*P*; gage tolerance minus
			Full-form	7	Max. major diameter of external thread provided that major diameter crest width shall not be less than 0.0254 mm (0.022 mm truncation). Apply W tolerance plus. Exception: if minimum major diameter crest width is less than 0.0254 mm (0.022 mm truncation), set nominal crest width to 0.0254 mm; W gage tolerance minus. For the 0.0254 mm crest width, major diameter is equal to the maximum major diameter of the external thread plus 0.216506*P* minus the sum of the external thread pitch diameter tolerance and 0.0440 mm.
		Pitch diameter		8	Min. pitch diameter of external thread; gage tolerance plus
Solid Thread-Setting Rings for Snap and Indicating Gages		Ring for GO	Pitch diameter [Note (2)]	9	Min. pitch diameter of internal thread; W gage tolerance plus
			Minor diameter	10	Min. minor diameter of internal thread; W gage tolerance minus
		Ring for NOT GO	Pitch diameter [Note (2)]	11	Max. pitch diameter of internal thread; W gage tolerance minus
			Minor diameter	12	Max. minor diameter of internal thread; W gage tolerance minus
Tolerance Class				13	Of internal thread to be checked by gage set with ring

*Indicated rows apply to truncated setting plugs only.

NOTES:
(1) Truncated portion is required when the gage to be set has the optional sharp root profile. See Figs. 20 and 22.
(2) Tolerances greater than W tolerance for pitch diameter are acceptable when setting internal indicating gages capable of compensating and when agreed upon by the supplier and user.

Copyright ASME International
Provided by IHS under license with ASME
No reproduction or networking permitted without license from IHS

Not for Resale

TABLE 9 X GAGE TOLERANCES FOR THREAD GAGES

Pitch, mm	Tolerance on Lead, mm [Notes (1), (2)]	Tolerance on Half-Angle of Thread, deg. ± min	Tolerance on Major or Minor Diameters [Note (3)]		Tolerance on Pitch Diameter [Notes (3), (4)]			
			To and Including 100 mm	Above 100 mm	To and Including 39 mm	Above 39 mm to 100 mm	Above 100 mm to 200 mm	Above 200 mm to 300 mm
1	2	3	4	5	6	7	8	9
0.2	0.005	0 40	0.008	...	0.005	...	...	...
0.25	.005	0 40	.008	...	.005	...	...	...
0.3	.005	0 30	.008	...	.005	...	...	...
0.35	.005	0 30	.008	...	.005	...	...	...
0.4	.005	0 30	.010	...	.005	...	...	...
0.45	.005	0 30	.010	...	.005	0.008	...	...
0.5	.005	0 30	.010	...	.005	.008	...	...
0.55	.005	0 30	.010	...	.005	.008	...	...
0.6	.005	0 20	.010	...	.005	.008	...	...
0.65	.005	0 20	.010	...	.005	.008	...	...
0.7	.005	0 20	.010	...	.005	.008	...	...
0.75	.005	0 20	.010	...	.005	.008	...	...
0.8	.008	0 15	.013	0.018	.008	.010	0.013	0.015
1	.008	0 15	.013	.018	.008	.010	.013	.015
1.25	.008	0 15	.013	.018	.008	.010	.013	.015
1.5	.008	0 10	.015	.023	.008	.010	.015	.018
1.75	.008	0 10	.015	.023	.008	.010	.015	.018
2	.008	0 10	.015	.023	.008	.010	.015	.018
2.5	.008	0 10	.015	.023	.008	.010	.015	.018
3	.008	0 10	.018	.028	.010	.013	.015	.018
3.5	.010	0 5	.018	.028	.010	.013	.015	.018
4	.010	0 5	.018	.033	.010	.013	.015	.018
4.5	.010	0 5	.020	.033	.010	.013	.015	.020
5	.010	0 5	.020	.033	.010	.013	.015	.020
5.5	.010	0 5	.020	.033	.010	.013	.015	.020
6	.010	0 5	.023	.038	.010	.013	.015	.020
8	.010	0 5	.023	.038	.010	.013	.015	.020

NOTES:
(1) Allowable variation in lead between any two threads shall not be farther apart than the length of the standard gage that is shown in ANSI/ASME B47.1aM.
(2) See para. 5.14.9.
(3) Tolerances apply to designated size of thread. Apply tolerances in accordance with Table 7.
(4) Above MJ300, the tolerance is directly proportional to the tolerance in column 9, in the ratio of the diameter to 300 mm.

Copyright ASME International
Provided by IHS under license with ASME
No reproduction or networking permitted without license from IHS

Not for Resale

The cone and vee snap gage can check roundness of the pitch cylinder for 180 deg. ovality by using the gage at different diametral locations on the internal thread.

The cone and vee snap gage can check taper of the pitch cylinder by using the gage at different locations axially on the internal thread.

4.6.2 Basic Design. The segments are usually made having a surface contact slightly above the pitch line near the center of the flank. The rolls are made with a point or line contact approximately at the pitch line depending upon the angle variations of the thread flanks. (See Fig. 7 for details.) Internal product threads less than 3 mm in diameter are not practical to check with snap gages.

4.6.3 Thread Form. The specifications for thread form, thread crests, and thread roots are summarized in Fig. 7.

4.6.4 Identification. The assembled gage should be marked with the metric nominal size, ×, pitch-tolerance class, PD, and pitch diameter in millimeters.

EXAMPLE:
MJ8×1-4H5H PD7.445

ANSI/ASME B1.16M cone and vee snap gages are interchangeable with MJ thread gages for the same class of thread.

4.7 Thread Snap Gages — Minimum Material: Thread-Groove Diameter Type (Table 2 — Gage 2.6)

4.7.1 Purpose and Use. The thread snap gage with two rolls with "best size" thread wire radius contacts inspects the minimum-material limit pitch diameter D_1 of the product internal thread.

Internal thread snap gages by design must have outside diameter of gaging elements below minor diameter of internal thread in order to enter. The gage checks the minimum-material PD limit by sensing the resistance at contact after being set to a master.

The roll thread snap gage can check roundness of the pitch cylinder for 180 deg. ovality by using the gage at different diametral locations.

The roll thread snap gage can check taper of the pitch cylinder by using the gage at different locations axially.

4.7.2 Basic Design. The "best size" thread wire radius contacts on the rolls check the threads at the pitch cylinder. Ribs on roll contacts are made one pitch apart. Internal product threads less than 3 mm in diameter are not practical to check with snap gages.

4.7.3 Thread Form. The specifications for the form on gage rolls are summarized in Fig. 8.

4.7.4 Identification. The assembled gage with rolls should be marked with the metric nominal size, ×, pitch-tolerance class, PD, and pitch diameter in millimeters.

EXAMPLE:
MJ8×1-4H5H PD7.445

ANSI/ASME B1.16M thread-groove snap gages are interchangeable with MJ thread gages for the same class of thread.

4.8 Thread-Setting Solid Ring Gages

4.8.1 Purpose and Use. Thread-setting ring gages are used for setting internal thread indicating and snap gages. GO thread-setting ring gages are made to the maximum-material limit of the internal thread specification and NOT GO thread-setting rings to the minimum-material limit.

4.8.2 Gage Blanks. Setting rings under 3 mm are too small to be practical. GO and NOT GO solid thread ring gage blanks have been standardized for various size ranges and pitches (see ANSI/ASME B47.1aM). Length of gage thread is a minimum of four pitches.

4.8.3 The GO and NOT GO thread-setting gage threads are discussed in detail below and are summarized in Table 6 and Fig. 9.

4.8.4 Thread Crests

4.8.4.1 The minor diameter of the GO setting ring gage is equal to the minimum minor diameter of the internal thread.

4.8.4.2 The minor diameter of the NOT GO setting ring gage is equal to the maximum minor diameter of the internal thread.

4.8.5 Thread Roots

4.8.5.1 The major diameter of the GO setting ring gage shall be cleared beyond $P/8$ width of flat by either an extension of the flanks toward a sharp vee or by a clearance cut of substantially $P/8$ width and approximately central.

4.8.5.2 The major diameter of the NOT GO setting ring gage shall be cleared by a clearance cut of substantially $0.385P$ width and approximately central. Form is optional. The NOT GO setting thread ring gage shall clear the maximum major diameter of the full-form portion of the truncated setting plug (see para. 5.2.6).

4.8.6 Runout of Pitch and Minor Diameter Cylinders for Sizes 3 mm and Larger. The pitch and minor cylinders of setting ring gages shall not exceed the runout as stated hereinafter. The permissible minimum effective minor diameter as determined by the runout (full-indicator movement) with respect to the pitch

Copyright ASME International
Provided by IHS under license with ASME
No reproduction or networking permitted without license from IHS

Not for Resale

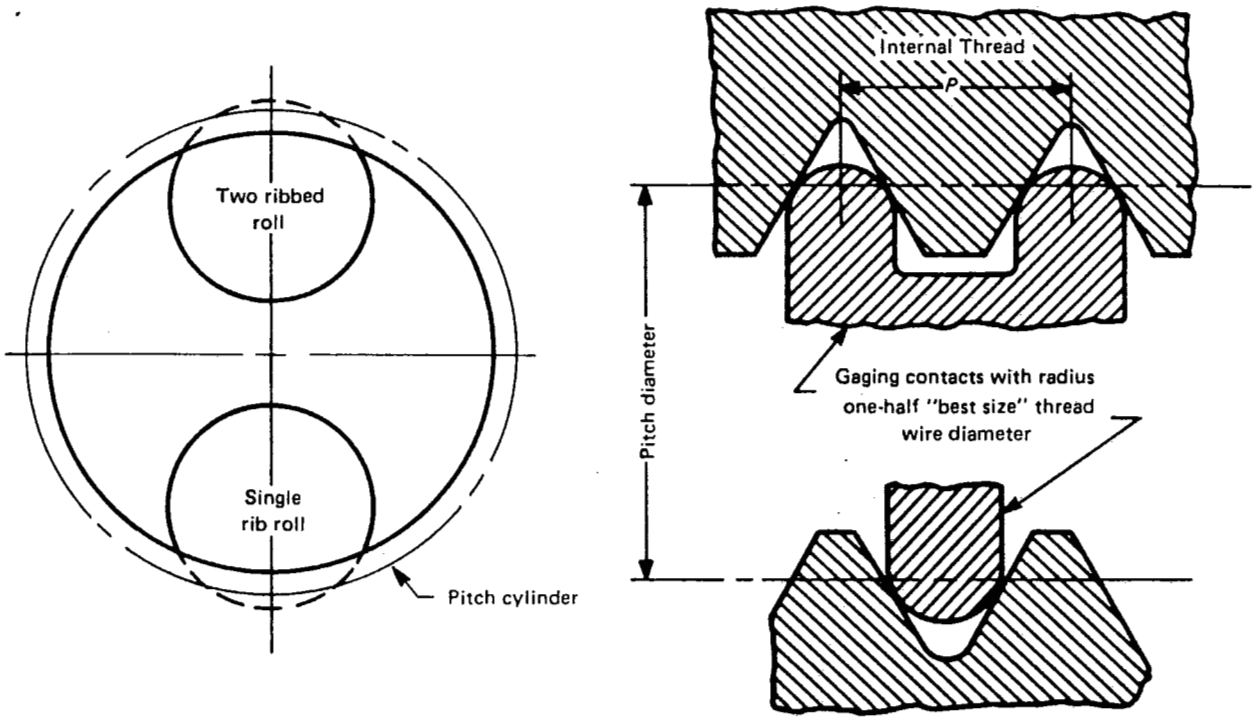

FIG. 8 THREAD SNAP GAGES — MINIMUM-MATERIAL THREAD-GROOVE DIAMETER LIMIT (Ref. Table 2 — Column D_1)

cylinder subtracted from the measured minor diameter shall not be less than the specified minimum minor diameter minus the sum of the W gage tolerances for pitch and minor diameter for GO setting gages and minus twice the sum for NOT GO setting gages.

4.8.7 Pitch Cylinder. Conformance of these elements is normally determined by the manufacturing of the setting ring gages to the applicable setting plug gage.

4.8.8 Pitch Diameter Limitation of Taper. The taper shall be within gage pitch diameter limits.

4.8.9 Lead and Half-Angle. Lead and half-angle variations shall be within limits specified in Table 10.

4.8.10 Incomplete Threads. The feather edge at both ends of the thread ring gage shall be removed on gages larger than 12 mm nominal size or having pitches coarser than 1.25 mm. One complete thread $\pm 1/4$ turn of the end threads shall be removed to obtain a full-thread blunt start. On gages 12 mm nominal size and smaller or having pitches 1.25 mm or finer, a 60 deg. chamfer from the axis of the gage is acceptable in lieu of a blunt start.

4.8.11 Identification. The GO and NOT GO thread-setting ring gages should be marked with the metric nominal size, ×, pitch-tolerance class, GO or NOT GO, SETTING, PD, and pitch diameter in millimeters.

EXAMPLES:

MJ8×1-4H5H GO SETTING PD7.350
MJ8×1-4H5H NOT GO SETTING PD7.445

ANSI/ASME B1.16M setting rings are *not* interchangeable with MJ thread gages for the same class of thread.

4.9 Plain Plug, Snap, and Indicating Gages to Check Minor Diameter of Internal Thread

4.9.1 Purpose and Use. The GO and NOT GO thread gages of all designs are cleared at the root but do not check the minor diameter of the product internal thread. Accordingly, para. 4.9 describes the types of plain diameter gage or precision instruments used to check the maximum- and minimum-material limits of the minor diameter.

Copyright ASME International
Provided by IHS under license with ASME
No reproduction or networking permitted without license from IHS

Not for Resale

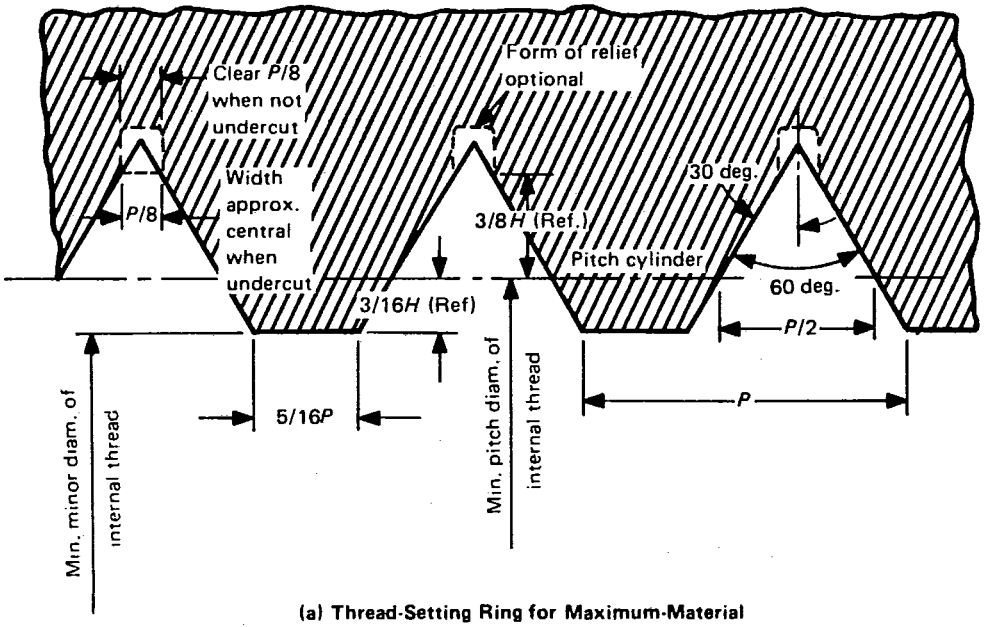

(a) Thread-Setting Ring for Maximum-Material Limit and GO Thread Gage

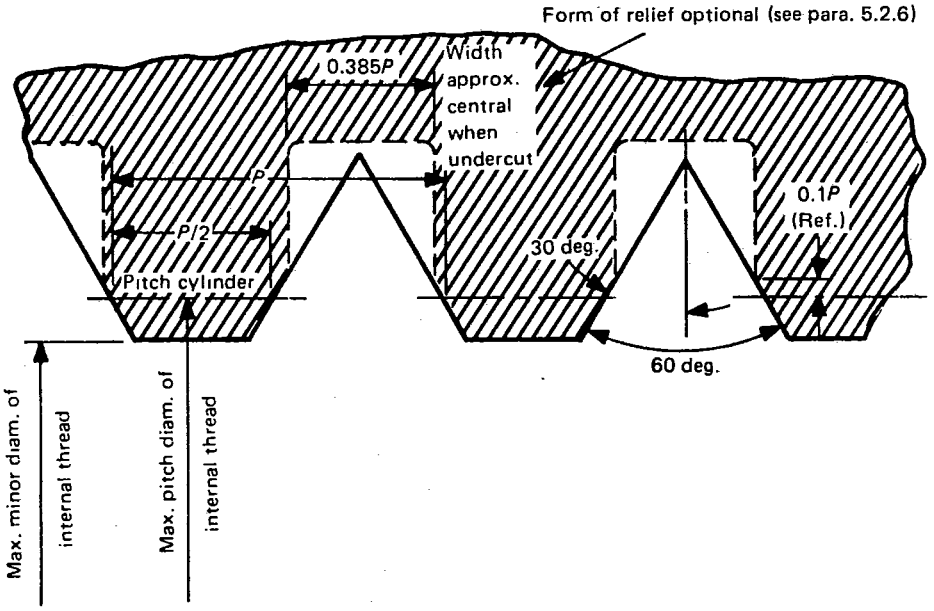

(b) Thread-Setting Ring for Minimum-Material Limit and NOT GO Thread Gage

FIG. 9 THREAD FORM OF SOLID THREAD-SETTING RING GAGES

Copyright ASME International
Provided by IHS under license with ASME
No reproduction or networking permitted without license from IHS
Not for Resale

TABLE 10 W GAGE TOLERANCES FOR THREAD GAGES

Pitch, mm	Tolerance on Lead [Notes (1), (2)]		Tolerance on Half-Angle of Thread, deg. ± min	Tolerance on Major or Minor Diameters [Note (3)]			Tolerance on Pitch Diameter [Notes (3), (4)]				
	To and Including 12 mm	Above 12 mm		To and Including 12 mm	Above 12 mm to 100 mm	Above 100 mm	To and Including 12 mm	Above 12 mm to 39 mm	Above 39 mm to 100 mm	Above 100 mm to 200 mm	Above 200 mm to 300 mm
1	2	3	4	5	6	7	8	9	10	11	12
0.2	0.003	...	0 30	0.008	...	...	0.003	...	...	...	...
0.25	.003	...	0 30	.008	...	...	.003	...	...	...	...
0.3	.003	...	0 30	.008	...	...	.003	...	...	...	...
0.35	.003	0.004	0 20	.008	0.008	...	.003	0.004	...	...	...
0.4	.003	.004	0 20	.008	.008	...	.003	.004	...	...	...
0.45	.003	.004	0 20	.008	.010	...	.003	.004	...	...	...
0.5	.003	.004	0 20	.008	.010	...	.003	.004	0.005	...	...
0.55	.003	.004	0 18	.008	.010	...	.003	.004	.005	...	...
0.6	.003	.004	0 18	.008	.010	...	.003	.004	.005	...	...
0.65	.003	.004	0 15	.008	.010	...	.003	.004	.005	...	...
0.7	.003	.004	0 15	.008	.010	...	.003	.004	.005	...	...
0.75	.003	.004	0 12	.008	.010	...	.003	.004	.005	...	...
0.8	.003	.004	0 12	.008	.013	0.018	.003	.004	.005	0.006	0.008
1	.004	.004	0 8	.013	.013	.018	.003	.004	.005	.006	.008
1.25	.004	.004	0 8	.013	.013	.018	.003	.004	.005	.006	.008
1.5	.004	.004	0 8	.013	.013	.018	.003	.004	.005	.006	.008
1.75	.004	.004	0 8	.015	.015	.023	.003	.005	.006	.008	.010
2	.005	.005	0 6	.015	.015	.023	.004	.005	.006	.008	.010
2.5	...	.005	0 6	...	.015	.023	...	.005	.006	.008	.010
3	...	.006	0 6	...	.015	.023	...	.005	.006	.008	.010
3.5	...	.006	0 5	...	.018	.028	...	.005	.006	.008	.010
4	...	.008	0 5	...	.018	.028	...	.005	.006	.008	.010
4.5	...	.008	0 4	...	.020	.033	...	.005	.006	.008	.010
5	...	.008	0 4	...	.020	.033	...	.005	.006	.008	.010
5.5	...	.008	0 4	...	.020	.033	...	.005	.006	.008	.010
6	...	.008	0 4	...	.023	.033	...	.005	.006	.008	.010
8	...	.008	0 4	...	.023	.038	...	.005	.006	.008	.010

NOTES:
(1) Allowable variation in lead between any two threads shall not be farther apart than the length of the standard gage that is shown in ANSI/ASME B47.1aM.
(2) See para. 5.14.9.
(3) Tolerances apply to designated size of thread. Apply tolerances in accordance with Table 8.
(4) Above MJ300, the tolerance is directly proportional to the tolerance in column 12, in the ratio of the diameter to 300 mm.

Copyright ASME International
Provided by IHS under license with ASME
No reproduction or networking permitted without license from IHS
Not for Resale

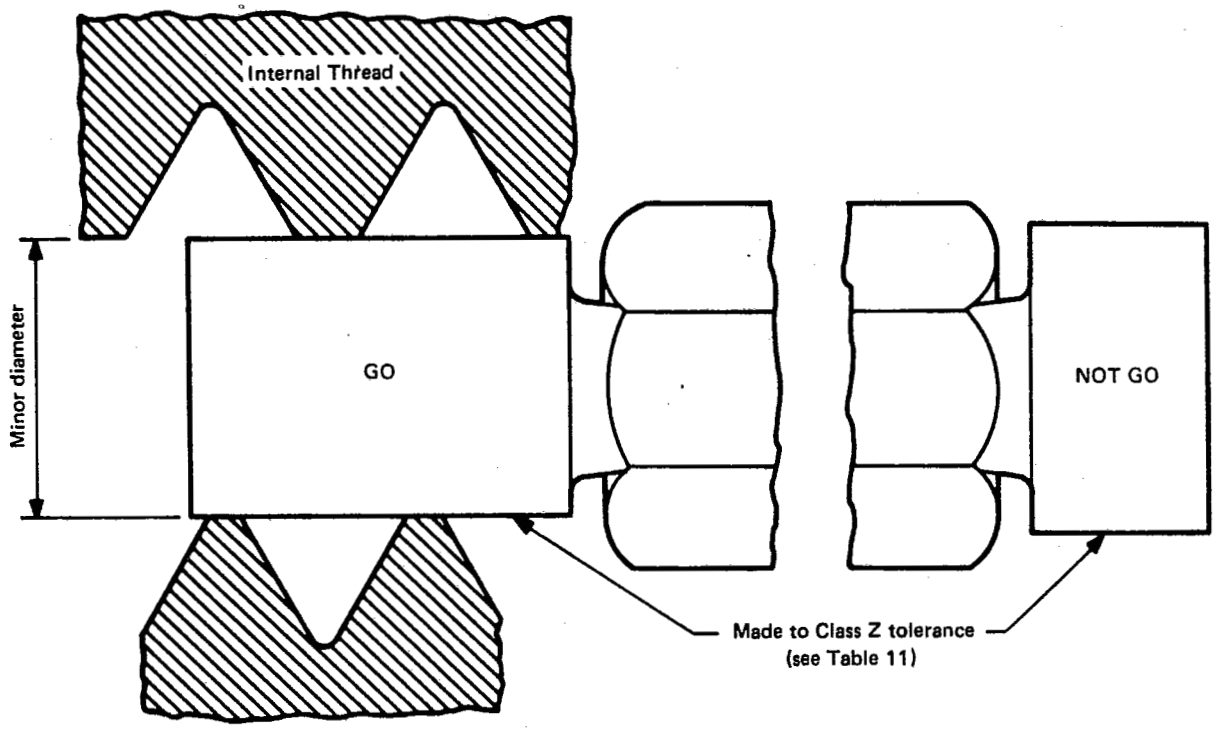

FIG. 10 MINOR DIAMETER LIMIT
(Ref. Table 2 — Column K_1)

4.9.2 GO and NOT GO Plain Cylindrical Plug Gages [Table 2 — Gage 3.1(a) and (b)]. Plug gages shall be made to Z tolerances and as shown in Fig. 10. GO shall be made to plus tolerance. NOT GO shall be made to minus tolerance.

A GO cylindrical plug gage must enter and pass through the length of the product without force. A NOT GO cylindrical plug gage must not enter. See Table 11 for gage tolerances.

The design of the GO and NOT GO cylindrical plain plug members has been standardized for various sizes, ranges, and pitches (see ANSI/ASME B47.1aM).

4.9.3 Identification. The cylindrical gage shall be marked with the metric nominal size, ×, pitch-tolerance class, GO or NOT GO, minor diameter in millimeters, and MINOR DIAMETER.

EXAMPLES:

MJ8×1-4H5H GO 7.026 MINOR DIAMETER
MJ8×1-4H5H NOT GO 7.216 MINOR DIAMETER

ANSI/ASME B1.16M plain plugs are *not* interchangeable with MJ plain gages for the same class of thread.

4.9.4 Precision instruments (Table 2 — Gage 13) such as dial calipers, inside micrometer calipers, pocket slide calipers, and vernier inside calipers can also be used to measure the minor diameter of product internal thread.

4.9.5 Snap (Table 2 — Gages 3.3 and 3.5) and Indicating (Table 2 — Gages 3.3, 3.5, and 5.2) Plain Diameter Gages for Checking Minor Diameter of Internal Thread. J_1 and J_2 gages are made to the individual gage manufacturer's standard with gaging contacts, segments, or rolls [see Fig. 11, sketches (a) and (b)] at 120 deg. or 180 deg. Size range for segment type is approximately 5 mm to 65 mm diameter. Above 65 mm, gage contacts are plain diameter rolls. Another design is the use of prism fingers for 15 mm size and larger with contacts at 180 deg. [see Fig. 11, sketch (c)]. In each design, the gages are set with cylindrical ring gages, outside micrometers, vernier calipers, or a gap made with gage blocks and jaw accessories. Gage contacts are collapsed into a tapped hole and released to contact product minor diameter. Dial indicator gages give the size of the product between minimum and maximum

Copyright ASME International
Provided by IHS under license with ASME
No reproduction or networking permitted without license from IHS
Not for Resale

TABLE 11 GAGE TOLERANCES FOR PLAIN CYLINDRICAL GAGES

Size Range, mm		Tolerances, mm [Note (1)]				
Above	To and Including	XX	X	Y	Z [Note (2)]	ZZ
1	2	3	4	5	6	7
1	21	0.0005	0.0010	0.0018	0.003	0.005
21	38	0.0008	0.0015	0.0023	0.003	0.006
38	64	0.0010	0.0020	0.0030	0.004	0.008
64	115	0.0013	0.0025	0.0038	0.005	0.010
115	165	0.0017	0.0033	0.0048	0.006	0.013
165	230	0.0020	0.0041	0.0061	0.008	0.016
230	300	0.0025	0.0051	0.0076	0.010	0.020

NOTES:
(1) Tolerances apply to actual diameter of plug or ring. Apply tolerances in accordance with Table 7. Symbols XX, X, Y, Z, and ZZ are standard plain cylindrical gage tolerance classes.
(2) Used as tolerance on plain cylindrical plug and ring gages to check minor diameter for internal threads and outside diameter for external threads. Also used for masters for setting indicating thread gages where design permits.

tolerance. Snap gages check the minor diameter limits by sensing the resistance at contact after being set to a master.

4.9.6 Identification. After contacts have been assembled in the snap or indicating gage, the assembled gage should be tagged with the metric nominal size, ×, pitch-tolerance class, minor diameter limits in millimeters, and MINOR DIAMETER.

EXAMPLE:
MJ8×1-4H5H 7.026-7.216 MINOR DIAMETER

ANSI/ASME B1.16M snap and indicating plain diameter gages are *not* interchangeable with MJ gages for the same class of thread.

4.10 Snap (Table 2 — Gage 3.4) and Indicating (Table 2 — Gage 5.1) Gages to Check Major Diameter of Internal Thread

4.10.1 Purpose and Use. The minimum major diameter limit of the product internal thread is considered acceptable when the product thread accepts GO gages. If further gaging is required, para. 4.10.2 describes gages used to check the maximum- and minimum-material limits of the major diameter.

4.10.2 Snap and Indicating Major Diameter Gages. Gages are made to the manufacturer's standard with 55 deg. maximum gage contacts at 180 deg. in the form of relieved thread contacts [see Fig. 12, sketch (a)]. Size range is approximately 5 mm to 65 mm. Above 65 mm, gage contacts are thread relieved rolls at 120 deg. [see Fig. 12, sketch (b)]. Another design is the use of conical contact on one finger and two "best size" thread balls on another contact [see Fig. 12, sketch (c)]. In each design, the indicating gages are set with cylindrical ring gages, outside micrometers, vernier calipers, or a gap made with gage blocks and jaw accessories. Gage contacts are collapsed into a tapped hole and released to contact product major diameter. Dial indicator gages give the size of the product between minimum and maximum tolerances. A snap gage checks the major diameter limit by sensing the resistance at contact after being set to a master.

4.10.3 Identification. After contacts have been assembled in the snap or indicating gage, the assembled gage should be tagged with the metric nominal size, ×, pitch-tolerance class, GO, NOT GO, major diameters in millimeters, and MAJOR DIAMETER INTERNAL.

EXAMPLE:
MJ8×1-4H5H GO 8.000 NOT GO 8.239 MAJOR DIAMETER INTERNAL

ANSI/ASME B1.16M snap and indicating gages may be interchangeable with MJ gages if customer's specifications agree on same class of thread.

4.11 Functional Indicating Thread Gages for Internal Thread (Table 2 — Gages 4.1 and 4.3)

4.11.1 Purpose and Use. The GO indicating thread gage inspects the maximum-material GO functional limit and size, A_1 and A_2, and the NOT GO functional diameter limit and size, B_1 and B_2, of product

Copyright ASME International
Provided by IHS under license with ASME
No reproduction or networking permitted without license from IHS

Not for Resale

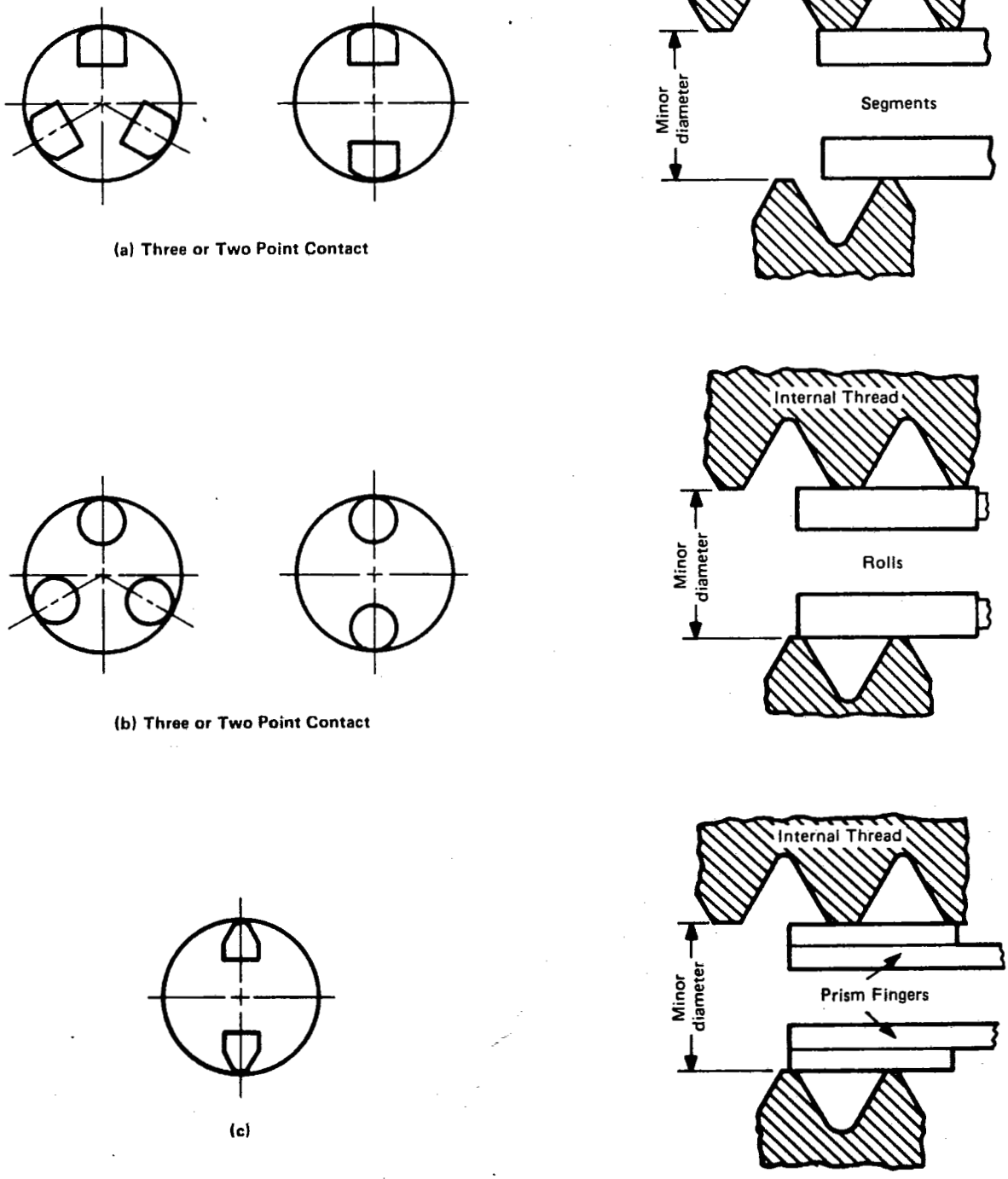

FIG. 11 INDICATING PLAIN DIAMETER GAGES — MAX.-MIN. MINOR DIAMETER LIMIT AND SIZE
(Ref. Table 2 — Columns K_1 and K_2)

Copyright ASME International
Provided by IHS under license with ASME
No reproduction or networking permitted without license from IHS
Not for Resale

ASME B1.22M 85 ■ 2595512 0012064 T

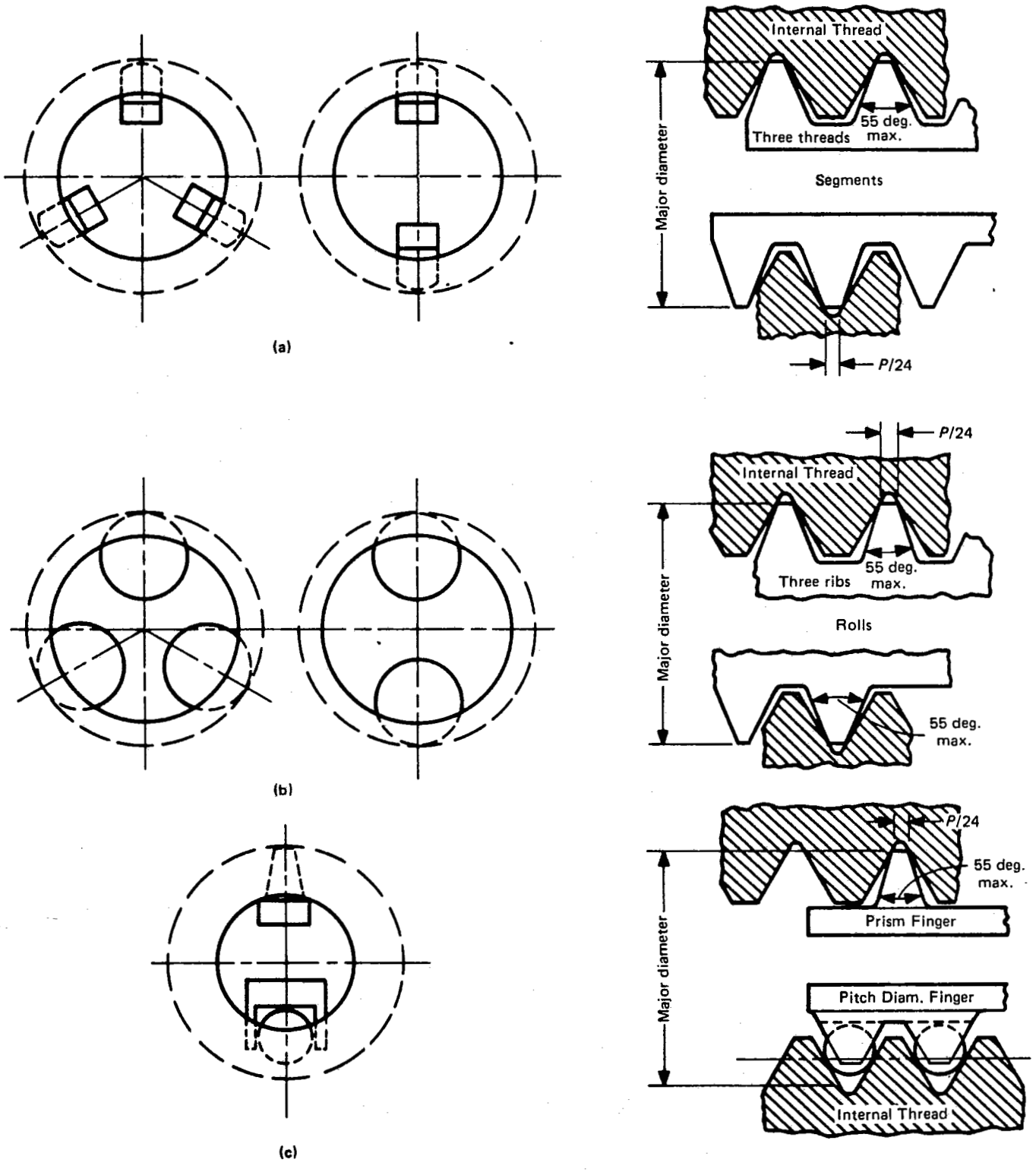

FIG. 12 SNAP AND INDICATING DIAMETER GAGES — MAX.-MIN. MAJOR DIAMETER LIMIT AND SIZE
(Ref. Table 2 — Columns J_1 and J_2)

Copyright ASME International
Provided by IHS under license with ASME
No reproduction or networking permitted without license from IHS
Not for Resale

internal thread. By the use of segments, rolls, or fingers, the gage is also used to check roundness of the pitch cylinder. Some types of indicating gages are set by using thread-setting ring gages (see para. 4.8). Other types may be set with plain ring gages or with gage block and jaw accessories. Readings indicate the position of product thread within the tolerance range.

4.11.2 Basic Design. Indicating gages have three contacts at 120 deg. or two contacts at 180 deg. Gages are made with segments, rolls, or fingers with the length of the functional GO gaging elements equal to the length of the standard GO thread plug gage. Internal product threads less than 3 mm in diameter are not practical to check with indicating gages.

4.11.3 Thread Form. The specifications for thread form on GO functional segments, rolls, or fingers are summarized in Table 7 and Fig. 13.

4.11.4 Thread Crests. The major diameter of the GO segments, rolls, or fingers are equivalent to a $P/8$ flat with a plus gage tolerance. The thread crests shall be flat in an axial plane and parallel to the axis of the segment, roll, or finger.

4.11.5 Pitch Cylinder. The pitch cylinder of the segments, rolls, or fingers shall be round and straight within the gage pitch diameter limits specified in Table 9.

4.11.6 Lead and Half-Angle Variations. Lead and half-angle variations on thread of segments, rolls, and fingers shall be within the limits specified (see Table 9).

4.11.7 Thread Roots. The minor diameter of the GO threaded segments, rolls, or fingers shall be cleared beyond a $P/8$ width of flat either by extension of the sides of the thread toward a sharp vee or by an undercut no greater than $P/8$ maximum width and approximately central.

4.11.8 Runout. The pitch and major cylinders of the threaded portion of the GO segments, rolls, or fingers shall not exceed the runout as determined by measurements of runout (full-indicator movement) on each gaging member with respect to the pitch cylinder. Runout shall not exceed one-half the X gage major diameter tolerance (see Table 9).

4.11.9 Identification. The gaging elements, segments, rolls, or fingers shall be marked with the metric nominal size and pitch. When the indicating gage is assembled with proper contacts, the gage should be tagged with the metric nominal size, ×, pitch-tolerance class, PD, and pitch diameter limits in millimeters.

EXAMPLE:
MJ8×1-4H5H PD7.350-7.445

ANSI/ASME B1.16M gages are interchangeable with MJ thread gages for the same class of thread.

4.12 Minimum-Material Indicating Thread Gages for Internal Thread (Table 2 — Gages 4.5 and 4.6)

4.12.1 Purpose and Use. The indicating thread gage inspects the minimum-material limit and size, C_1 and C_2, D_1 and D_2, of product internal threads. By the use of interchangeable segments, rolls, or balls, the gage is also used to check roundness and taper of the pitch cylinder. Some types of indicating gages are set using a thread-setting ring gage (see para. 4.7). Readings indicate the position of product thread within the tolerance range. Other types may be set with gage blocks and jaw accessories, plain ring gages, or a measuring machine.

4.12.2 Basic Design. Indicating gages have three contacts at 120 deg. or two contacts at 180 deg. Gages are made with segments, rolls, or ball design with cone and vee configuration (pitch diameter type) or ball only (thread-groove diameter type). Internal product threads less than 3 mm in diameter are not practical to check with indicating gages.

4.12.3 Thread Form. The specifications for cone and vee segments are shown in Fig. 14; the ball design and thread-groove diameter type are shown in Fig. 15.

4.12.4 The major diameter of the cone and vee segments or rolls are made to the manufacturer's standard (see Figs. 14 and 15).

4.12.5 Identification. The gaging elements, segments, rolls, or ball fingers should be marked with the metric nominal size and pitch. When the gage is assembled with proper gaging contacts, the indicating gage should be tagged with the metric nominal size, ×, pitch-tolerance class, PD, and pitch diameter in millimeters.

EXAMPLE:
MJ8×1-4H5H PD7.445

ANSI/ASME B1.16M gages are interchangeable with MJ thread gages for the same class of thread.

4.13 Indicating Runout Thread Gage for Internal Thread (Table 2 — Gage 4.7)

4.13.1 Purpose and Use. This indicating gage inspects the runout of the minor diameter to the pitch diameter, M, of the product internal thread. Readings

Copyright ASME International
Provided by IHS under license with ASME
No reproduction or networking permitted without license from IHS
Not for Resale

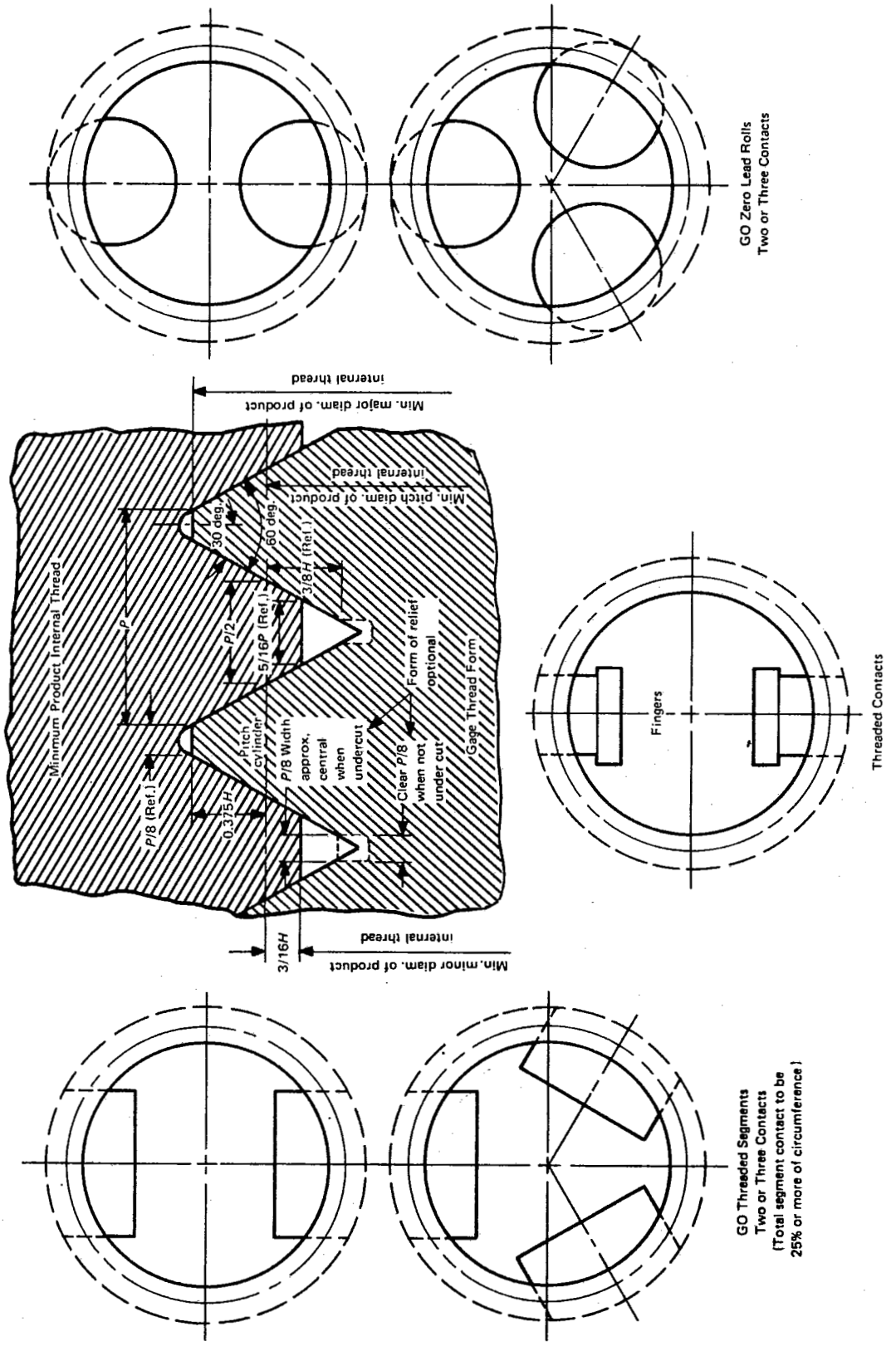

FIG. 13 INDICATING THREAD GAGES — MAXIMUM-MATERIAL GO FUNCTIONAL LIMIT AND SIZE
(Ref. Table 2 — Columns A_1 and A_2, B_1 and B_2)

Copyright ASME International
Provided by IHS under license with ASME
No reproduction or networking permitted without license from IHS

Not for Resale

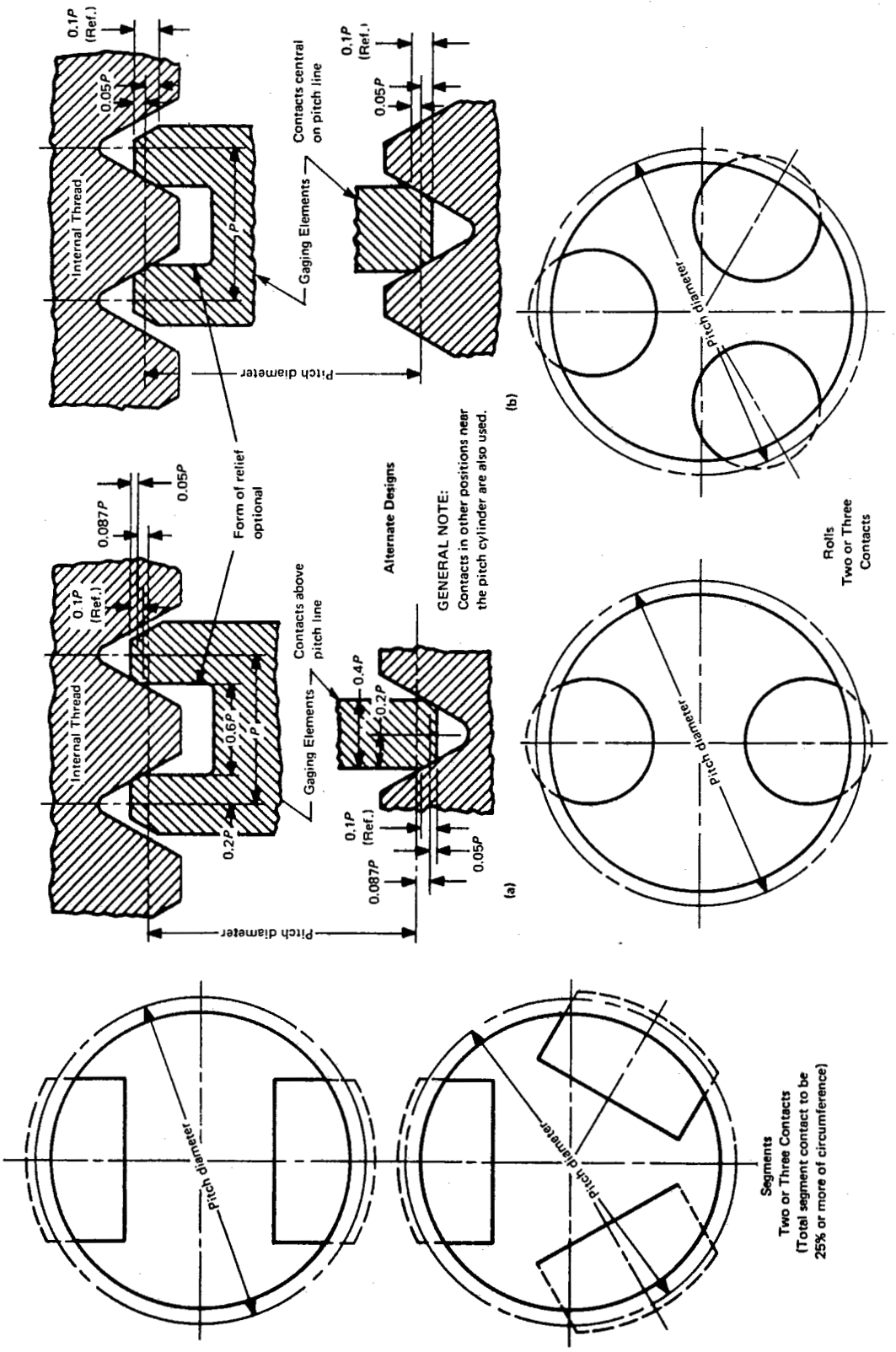

FIG. 14 INDICATING THREAD GAGES — MINIMUM-MATERIAL PITCH DIAMETER LIMIT AND SIZE — CONE AND VEE (Ref. Table 2 — Columns C_1 and C_2)

Copyright ASME International
Provided by IHS under license with ASME
No reproduction or networking permitted without license from IHS

Not for Resale

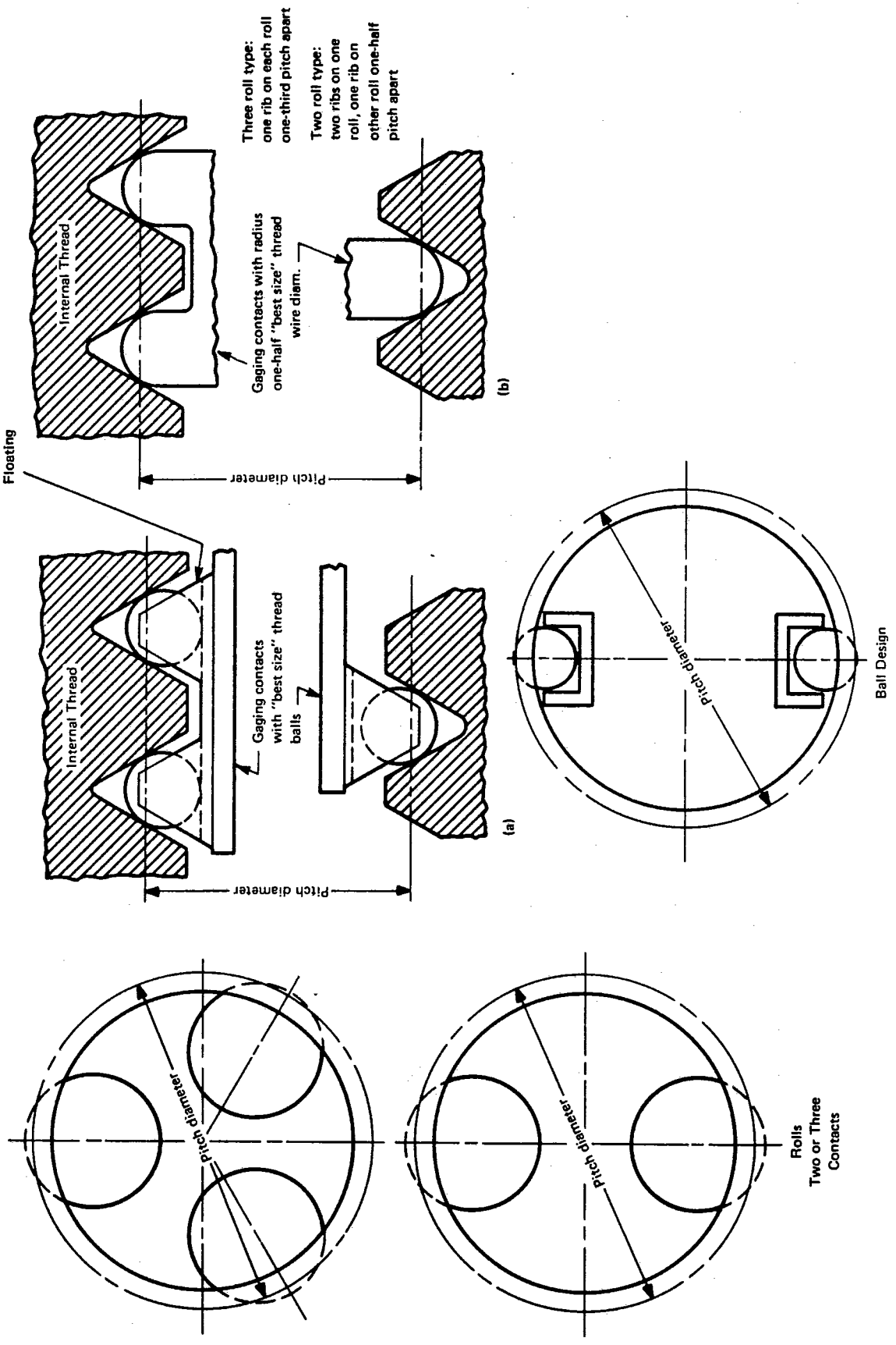

FIG. 15 INDICATING THREAD GAGES — MINIMUM-MATERIAL PITCH DIAMETER LIMIT AND SIZE — BALL AND RADIUS (Ref. Table 2 — Columns D_1 and D_2)

Copyright ASME International
Provided by IHS under license with ASME
No reproduction or networking permitted without license from IHS
Not for Resale

indicate the position of product minor diameter to the pitch diameter within the tolerance specified.

4.13.2 Basic Design. Indicating gages have three contacts, one plain and two threaded, at 120 deg.; or two contacts, one plain and one threaded, at 180 deg. [see Fig. 16, sketch (a)]. The range of segments is 6 mm and larger. The range of rolls is 44 mm and larger.

The ball-type indicating gage has two balls on one contact engaging two threads, and one contact has a plain prism-shaped finger 180 deg. apart from the ball contact [see Fig. 16, sketch (b)]. Range is 15 mm and larger.

The indicating gage is set by a GO setting ring gage (see Fig. 9) with plain gaging contact on the minor diameter of the thread ring gage and with thread contact on the pitch diameter of the thread ring gage.

4.13.3 Thread Form. The specifications for thread form on vee segments or rolls are summarized in Fig. 14. Plain contacts have line bearing on minor diameter of product. Balls are "best size" thread ball contacting thread at pitch line.

4.13.4 Thread Crests. The thread crests shall be flat in an axial plane and parallel to the axis of the segment or roll.

4.13.5 Lead and Half-Angle Variations. Lead and half-angle variations on threaded segments or rolls shall be within the limits specified (see Table 9).

4.13.6 Identification. The gaging elements, segments, rolls, or ball finger should be marked with the metric nominal size and pitch. When the gage is assembled with proper gaging contacts, the indicating gage should be tagged with the metric nominal size, ×, pitch-tolerance class, and RUNOUT.

EXAMPLE:
MJ8×1-4H5H RUNOUT

ANSI/ASME B1.16M runout gages are interchangeable with MJ thread gages for the same class of thread.

4.14 Differential Gaging (Table 2 — Gage 4.8)

4.14.1 Every screw thread has two gaged sizes: functional diameter and pitch diameter. The pitch diameter is the gaged size with the least thread-element variation. The functional diameter is the gaged size that includes all thread-element variations. Only when a screw thread has perfect position and form (see Fig. 17B), i.e., no variations in lead (including helical path), flank angles, taper, straightness, and roundness, are these gaged sizes equal. A variation of a single thread element on an internal thread decreases the functional size in relation to the pitch diameter. Cumulative thread-element differential gaging measures the sum of all single thread-element variations corresponding to the total pitch diameter change called pitch diameter equivalent $\Delta D_2 c$. Single thread-element differential gaging measures each portion of the total pitch diameter change generated by lead, composite flank angle, roundness, straightness, and taper.

4.14.2 Purpose and Use. Differential gaging is a variables method for in-process control and/or final conformance inspection that compares the following different types of measured values on the product thread:

(*a*) functional sizes;

(*b*) pitch or groove diameter size;

(*c*) special sizes between (a) and (b) which isolate variations in lead (helix), flank angle, roundness, straightness, and taper.

The differential readings are the following differences in indicator readings:

(*a*) between different specific types of gage contacts for cumulative thread-element and lead analysis [see Fig. 17A, sketches (a), (b), and (c)];

(*b*) with the same gage contacts used at different locations along and around the thread for roundness, straightness, and taper analysis [see Fig. 17A, sketch (c)];

(*c*) calculated from the above gage readings for composite flank angle analysis.

NOTE: For all differential readings, do not mix measurements using two-roll cluster with three-roll cluster gages.

4.14.3 Basic Design and Differential Reading Procedure

4.14.3.1 Cumulative Thread-Element Differential Gaging. Indicating gages have either three contacts at 120 deg. spacing or two contacts at 180 deg. spacing. The indicating gages with segments or rolls as shown in Figs. 13 and 17A, sketch (a), give the functional size indicating reading Z. The indicating gage with cone and vee segments or rolls with one thread pitch engagement at pitch line (Fig. 14), thread-groove diameter type, and ball-insert type (Fig. 15), all shown in Fig. 17A, sketch (c), give the pitch diameter size indicating reading X. The difference in the indicator readings X − Z between the types of gages gives the cumulative thread-element differential reading, which corresponds to the pitch diameter equivalent $\Delta D_2 c$ for the combined lead (helix), flank angle, roundness, and taper variations on the product thread (see Fig. 17A).

Copyright ASME International
Provided by IHS under license with ASME
No reproduction or networking permitted without license from IHS

Not for Resale

ASME B1.22M 85 ■ 2595512 0012070 5

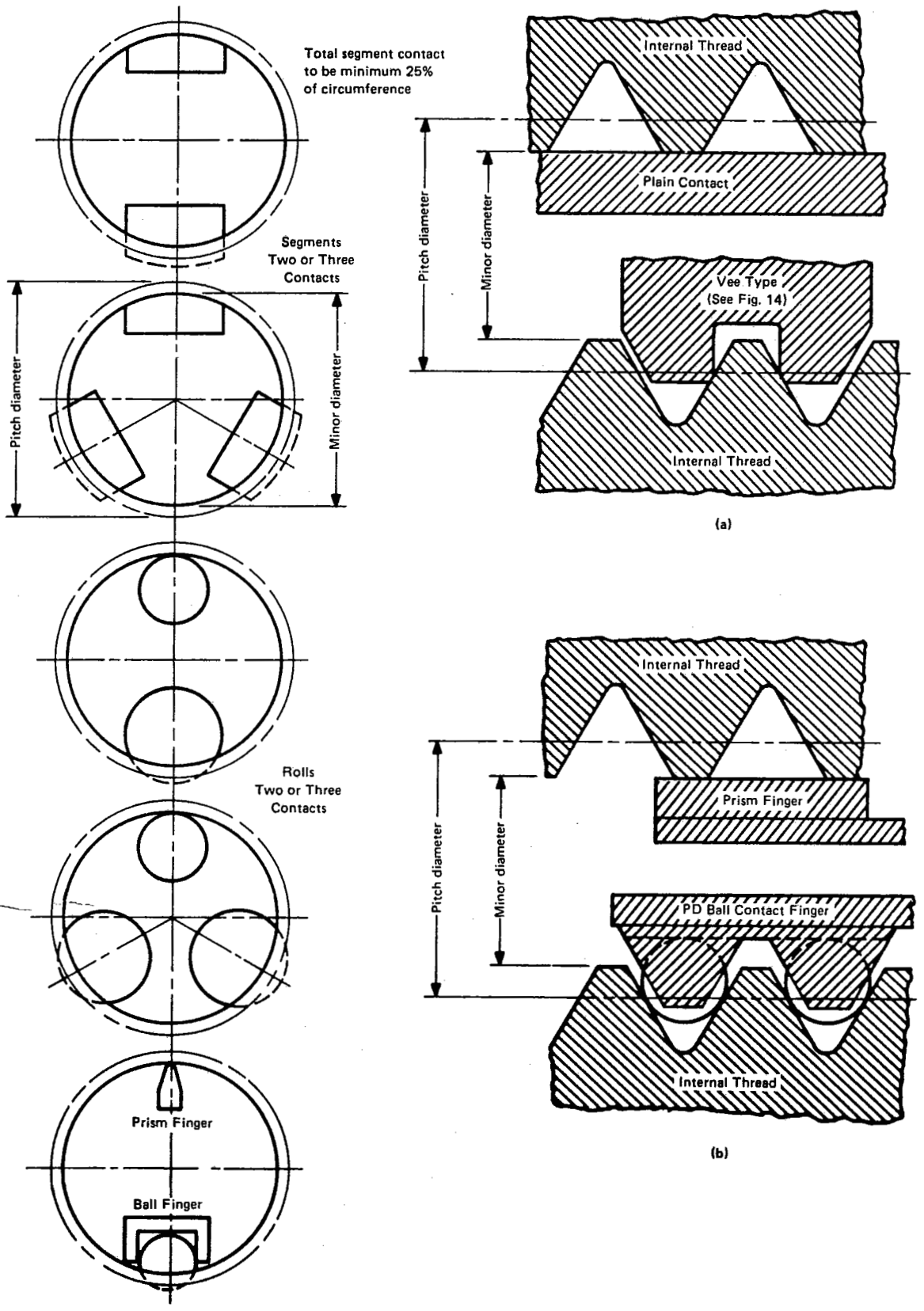

FIG. 16 INDICATING THREAD GAGES — DIAMETER RUNOUT — MINOR TO PITCH DIAMETER (Ref. Table 2 — Column M)

Copyright ASME International
Provided by IHS under license with ASME
No reproduction or networking permitted without license from IHS
Not for Resale

4.14.4 Single Thread-Element Differential Gaging

4.14.4.1 Lead (Helix) Differential Gaging. The indicating gage reading Y using the full-form thread segments or rolls with one thread pitch engagement, similar to Figs. 13 and 17A, sketch (b), is compared to the reading Z using the functional size gage shown in Figs. 13 and 17A, sketch (a).

The difference between the measured values Y − Z plus one-fourth of taper measurement is the lead differential reading, which corresponds to the pitch diameter equivalent $\Delta D_2\lambda$ for the lead and helix variation on the product thread.

4.14.4.2 Roundness, Straightness, and Taper Differential Gaging. By the use of cone and vee segments or rolls [Figs. 14 and 17A, sketch (c)], thread-groove diameter type [Figs. 15 and 17A, sketch (c)] or PD ball-insert type [Figs. 15 and 17A, sketch (c)], the roundness, straightness, and taper of pitch cylinder are checked. Rotate the product between contacts on thread for maximum difference in roundness readings. Two contacts spaced 180 deg. apart give even lobing out-of-round measurement. Three contacts spaced 120 deg. apart give odd lobing out-of-round measurements. Translate the product thread between contacts along the axis of the thread without rotation for maximum difference in straightness and taper.

4.14.4.3 Composite Flank Angle Variation as a Pitch Diameter Equivalent. An approximate diameter equivalent $\Delta D_2\alpha$ for the composite flank angle variation is calculated by subtracting the sum of the lead differential reading Y − Z plus one-fourth of taper measurement from the cumulative thread-element differential reading X − Z.

4.14.5 Thread Form. The functional segments or rolls [Fig. 17A, sketch (a)] are described in para. 4.11. The full-form one thread vee segment or roll [Figs. 13 and 17A, sketch (b) lower contact] has a depth of thread equivalent to the functional type, but relieved on the outside thread flanks. The full-form cone segment or roll [Figs. 13 and 17A, sketch (b) upper contact] has a $P/8$ flat on outside diameter. The cone and vee segments or rolls [Fig. 17A, sketch (a)] are described and shown in Fig. 14. Thread-groove diameter type [Fig. 17A, sketch (c)] is described and shown in Fig. 15. PD ball-type insert [Fig. 17A, sketch (c)] is described and shown in Fig. 15.

4.14.6 Identification. The gaging elements, segments, rolls, or inserts should be marked with the metric nominal size, ×, pitch-tolerance class, and the type of differential reading.

EXAMPLE:
MJ8×1-4H5H LEAD DIFFERENTIAL VARIATION

ANSI/ASME B1.16M gages are interchangeable with MJ thread gages for the same class of thread.

4.15 Cumulative Form Gaging (Table 2 — Gage 4.10)

4.15.1 Purpose and Use. Cumulative form variation represents the combined size effect of the thread variations resulting from variations in lead (pitch), helix, flank angle, taper, roundness, straightness, and other forms of variation of the thread. It is the maximum measured difference between the GO thread functional indicating gage (see para. 4.11) and the single-element pitch diameter, cone and vee, or thread-groove diameter (see para. 4.12) type gages. Cumulative thread-element differential gaging information in para. 4.14 describes the procedure for measuring cumulative form variation.

4.16 Pitch Micrometers (Table 2 — Gages 6 and 7)

4.16.1 Purpose and Use. Inside micrometers, caliper type, and direct-reading measuring instruments. Cone and vee contact points are modified for a NOT GO profile or pitch diameter contact only (see Fig. 18).

4.17 Thread-Measuring Balls (Table 2 — Gage 8)

4.17.1 Purpose and Use. One indicating gage using thread-measuring balls as gaging elements to inspect the pitch diameter of the internal thread is shown in Fig. 15, sketch (a). Special fixturing and ball probes may be required when using a three-axis coordinate measuring machine for internal measurement of pitch diameter. See Appendix B, Sections 9 and 10 for more information on thread-measuring balls.

4.18 Optical Comparator and Toolmaker's Microscope (Table 2 — Gage 9)

4.18.1 Purpose and Use. The optical comparator magnifies and projects the thread profile on screen. Internal threads are checked using cast replicas. For best profile image, the threaded item is positioned so that the light is aligned with the thread lead angle. Since the thread profile is defined in a plane containing the axis, a correction factor must be added to the measured flank

Copyright ASME International
Provided by IHS under license with ASME
No reproduction or networking permitted without license from IHS

Not for Resale

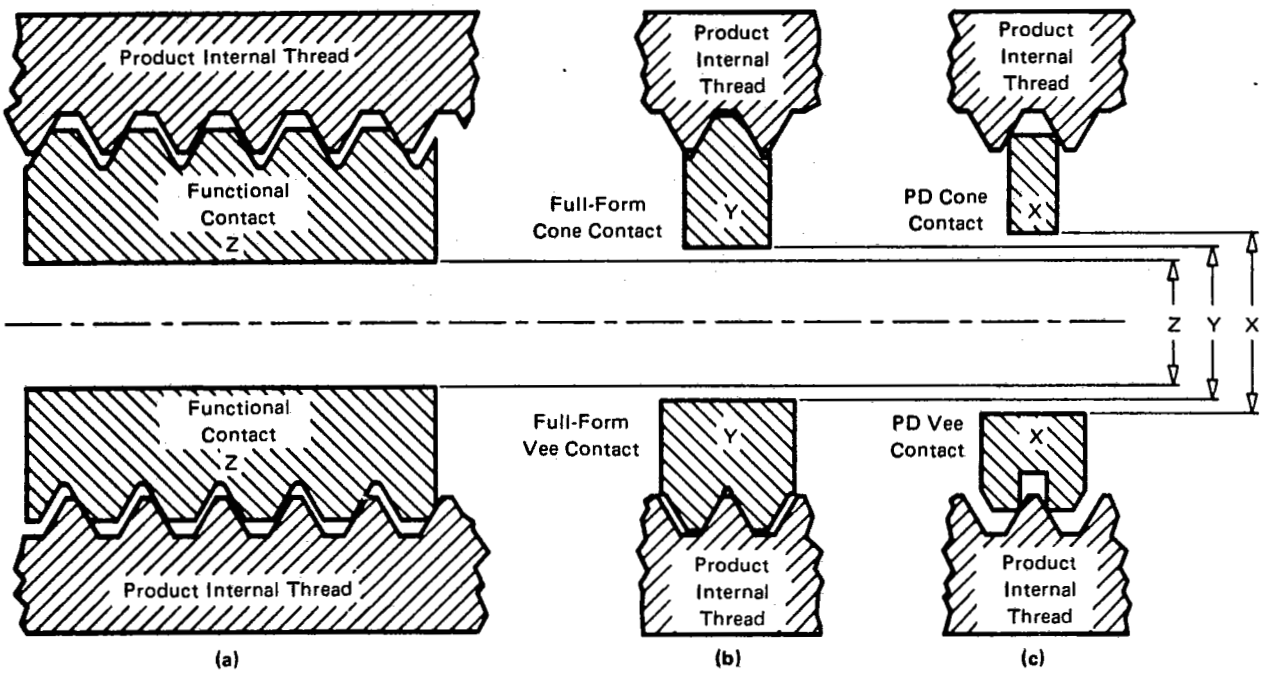

X = indicator reading for (minimum-material) pitch diameter, used for taper, straightness, and roundness measurement

Y = indicator reading used for lead differential analysis

Z = indicator reading for (maximum-material) functional size, used for lead differential analysis

X-Z = cumulative thread-element differential analysis ΔD_{2c}

(Y-Z) + Taper/4 = individual element analysis for lead differential $\Delta D_{2\lambda}$ (resultant diameter equivalent)

(X-Z) − [(Y-Z) + Taper/4] = individual analysis for angle differential $\Delta D_{2\alpha}$ (resultant diameter equivalent)

FIG. 17A INTERNAL IMPERFECT SCREW THREAD

Copyright ASME International
Provided by IHS under license with ASME
No reproduction or networking permitted without license from IHS
Not for Resale

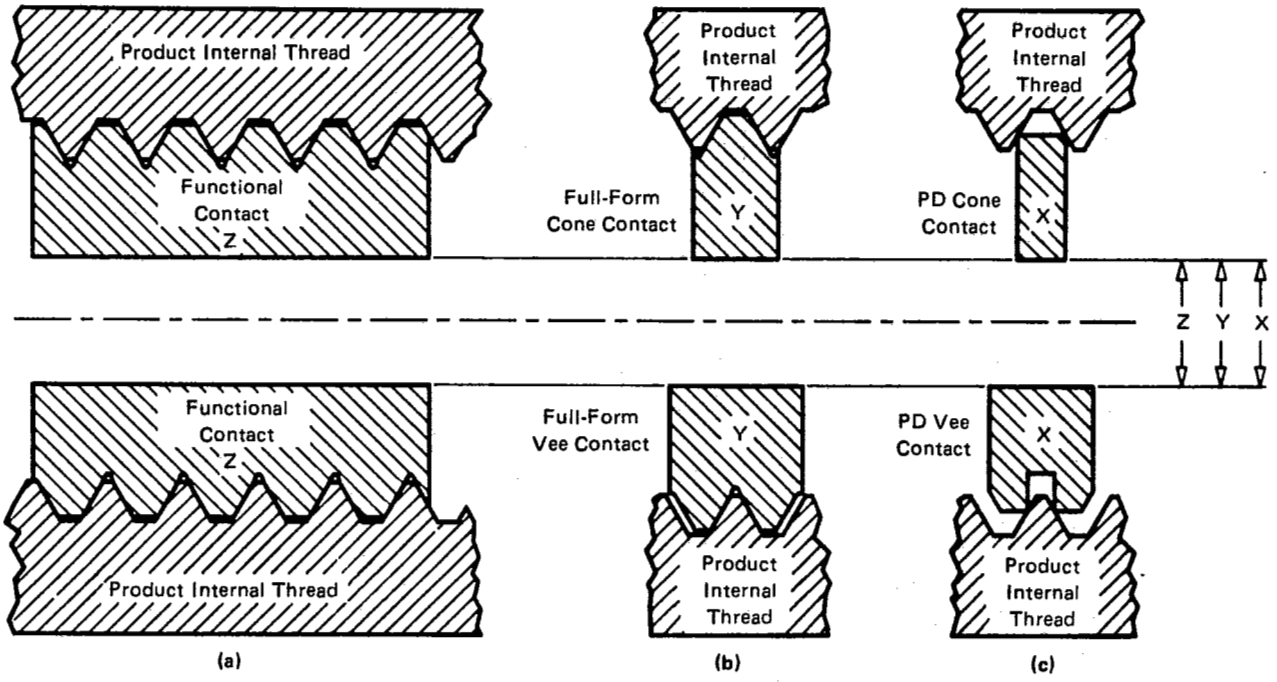

X = Y = Z = indicator readings same for (maximum-material) functional size, (minimum-material) pitch diameter size, and lead and angle size

FIG. 17B INTERNAL PERFECT SCREW THREAD

Copyright ASME International
Provided by IHS under license with ASME
No reproduction or networking permitted without license from IHS

Not for Resale

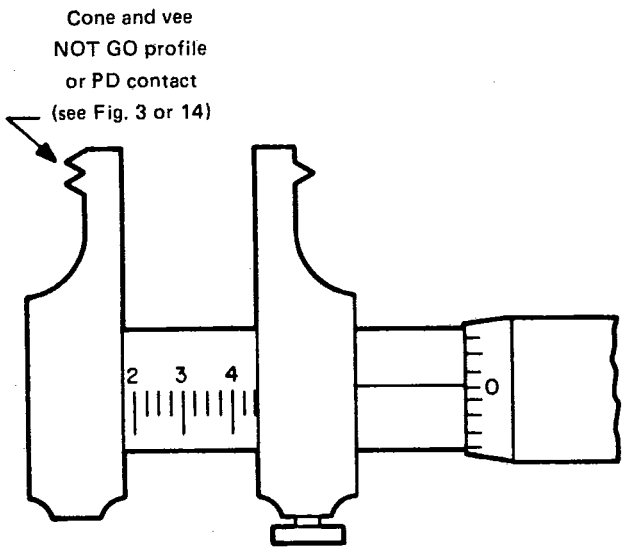

FIG. 18 INSIDE MICROMETER, CALIPER TYPE
(Ref. Table 2 — Columns B_1, B_2, C_1, C_2, E_1, E_2, G_1, and G_2)

angle observed normal to the lead angle. For most standard single-lead threads, the correction factor (see para. A2.6.1) is less than 0 deg. 5 min.

Optical comparators are generally fitted with lenses providing various magnifications between 10× and 100×. Profile dimensions are checked using appropriate linear and angular scales on the machine and by application of thread profile, radius, and other overlay charts. Flank angles, thread crest and root flats, root radius, other groove and ridge dimensions, and axial plane pitch and lead may be checked. Major, minor, and pitch diameters are identified, then measured using table traverse readouts.

4.18.2 The toolmaker's microscope is similar in function to the optical comparator, but does not include screen projection or overlay charts. Magnifications are generally lower than those of optical comparators. Profile reticules are used in place of charts.

4.19 Profile Tracing Instrument (Table 2 — Gage 10)

4.19.1 Purpose and Use. The instrument inspects thread contour to an accuracy of 0.005 mm for 25 mm of horizontal and 2.5 mm of vertical travel at 100× magnification.

The tracing on the chart paper may be analyzed for elements of the thread profile, including depth, crest width, lead, angle, and radius at root of thread.

The instrument is generally able to check internal threads of 4.5 mm and larger at magnifications from 5× to 100×.

4.20 Surface Roughness Equipment (Table 2 — Gage 14)

4.20.1 Purpose and Use. Measurement of surface roughness on screw-thread flanks is usually made with an instrument which traverses a radiused stylus across the lay. The stylus displacement due to the surface irregularities is electronically amplified and the meter reading displays the arithmetical average roughness height in micrometers (see ANSI/ASME B46.1). Some instruments produce a chart of the traced path which shows the peak-to-valley heights of the surface irregularities. Special fixturing is required to position and guide the stylus over the thread surface.

4.21 Roundness Equipment (Table 2 — Gage 15)

4.21.1 Purpose and Use. There are two types of precision roundness-measuring instruments: precision rotary tables and precision spindles. A special stylus coupled to an electric unit records the out-of-roundness on a circular chart as it traces around the internal cylindrical surface of the workpiece. The instrument provides a series of magnifications for stylus displacement, a filtering system for isolating lobing from surface irregularities, various means for centering the amplified stylus trace on the polar chart, and a selection of rotating speeds. For details on measuring and for other methods of checking roundness, see ANSI/ASME B89.3.1.

4.22 Miscellaneous Gages and Gaging Equipment

The description of the internal gages in paras. 4.1 through 4.21 is definitely not a complete catalog of the various types available for inspection purposes. The gages not described above may be used provided that they adhere to the standard thread practice noted in this Standard (i.e., truncation, form of thread, tolerance, etc.) and have producer and consumer agreement.

Copyright ASME International
Provided by IHS under license with ASME
No reproduction or networking permitted without license from IHS
Not for Resale

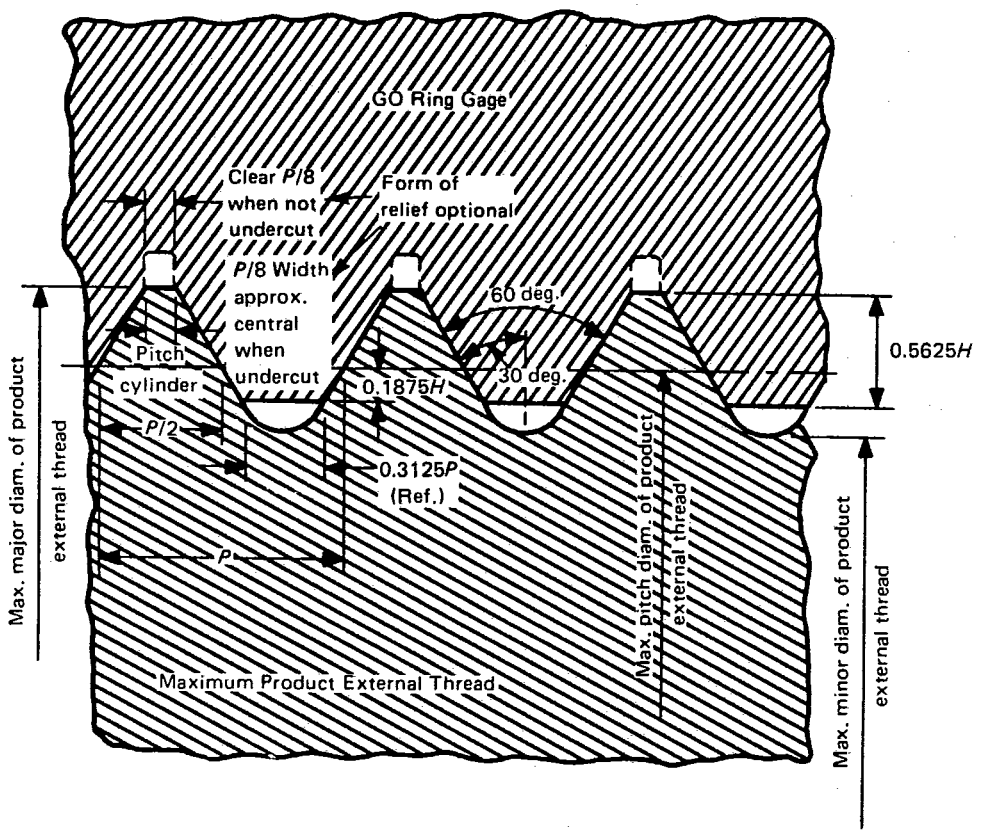

FIG. 19 MAXIMUM-MATERIAL GO FUNCTIONAL LIMIT (Ref. Table 1 — Column A_1)

5 TYPES OF GAGES FOR PRODUCT EXTERNAL THREAD

5.1 GO Working Thread Ring Gages (Table 1 — Gage 1.1)

5.1.1 Purpose and Use. The GO thread ring gage inspects the maximum-material GO functional limit A_1 of product external thread. The GO thread ring gage when properly set to its respective calibrated thread-setting plug represents the maximum-material GO functional limit of the product external thread, and its purpose is to assure interchangeable assembly of maximum-material mating parts.

Adjustable GO thread ring gages must be set to the applicable W tolerance setting plugs [see Table 15, Note (1)]. The product thread must freely enter the GO thread ring gage for the entire length of the threaded portion. The GO thread ring gage is a cumulative check of all thread elements except the major diameter.

5.1.2 Basic Design. The maximum-material limit or GO thread ring gage is made to the prescribed maximum-material limit of the product thread, and the gaging length is equal to the thickness of the thread ring gage.

5.1.3 Gage Blanks. For practical and economic reasons, the designs and thicknesses of thread ring gages have been standardized for various size ranges and pitches (see ANSI/ASME B47.1aM or Table C1).

5.1.4 Thread Form. The specifications for thread form are summarized in Table 7 and Fig. 19.

5.1.5 Thread Crests. The minor diameter of the GO thread ring gage shall be equal to the minimum pitch diameter of the product internal thread minus $\frac{3}{8}H$, with a minus gage tolerance. This corresponds to a width of flat of $\frac{5}{16}P$. The thread crests shall be flat in an axial section and parallel to the axis.

Copyright ASME International
Provided by IHS under license with ASME
No reproduction or networking permitted without license from IHS

Not for Resale

5.1.6 Thread Roots. The major diameter of the GO thread ring gage shall be cleared beyond $P/8$ width of flat by either an extension of the flanks toward a sharp vee or by a clearance cut of substantially $P/8$ width and approximately central. The root clearance must be such that the maximum major diameter of the full-form section of the truncated thread-setting plug gage is cleared after the gage has been properly set to size.

5.1.7 Runout of Pitch and Minor Cylinders. On thread ring gages, an eccentric condition results in an undersize effective minor diameter, having a width of flat less than $\frac{5}{16}P$, which may encroach on the maximum permissible limit for the root profile of the product external thread. The permissible minimum effective minor diameter, as determined by measurements of runout (full-indicator movement) with respect to the pitch cylinder, shall not be less than the specified minimum minor diameter minus the sum of the gage tolerances for the pitch and minor diameters.

5.1.8 Pitch Cylinder. Pitch cylinder is transferred by the setting of the thread ring gage to the applicable truncated setting plug gage.

5.1.9 Lead and Half-Angle. Lead and half-angle variations shall be within the limits specified in Table 9. Misalignment of the threads on each side of the adjustable slot may not exceed the lead limits.

5.1.10 Incomplete Thread. The feather edge at both ends of the thread ring gage shall be removed. On gages larger than MJ12 or with a pitch coarser than 1.25 mm, remove one complete thread $\pm\frac{1}{4}$ turn of the partially formed thread at each end to obtain a full-thread blunt start. On gages MJ12 and smaller or with a pitch of 1.25 mm or finer, the end threads may have a 60 deg. chamfer from the axis of the gage to a depth of one-half to one pitch. This is acceptable in lieu of the blunt start.

5.1.11 Chip Grooves. GO thread ring gages of the adjustable type do not require chip grooves since the adjusting slots serve this purpose. Solid working thread ring gages are made with or without chip grooves depending upon the gage designer's requirements.

5.1.12 Identification. The GO thread ring gage should be marked with the metric nominal size, ×, pitch-tolerance class, GO, PD, and pitch diameter in millimeters.

EXAMPLE:
MJ8×1-4h6h GO PD7.350

ANSI/ASME B1.16M GO ring gages are *not* interchangeable with MJ thread gages.

5.2 Adjustable NOT GO Thread Ring Gages (Table 1 — Gage 1.2)

5.2.1 Purpose and Use. The NOT GO thread ring gage inspects the NOT GO functional diameter limit B_1 of product external thread. The NOT GO thread ring gage when properly set to its respective thread-setting plug represents the NOT GO functional diameter limit of the product external thread. The NOT GO thread ring gage and NOT GO threaded segment-type indicating gage are more reliable for checking thin-walled parts, which might be deformed by NOT GO thread snap gages. NOT GO thread ring gages must be set to the applicable W tolerance-setting plugs.

NOT GO thread ring gages when applied to the product external thread may engage only the end threads (which may not be representative of the complete product thread).

Starting threads on NOT GO thread ring gages are subject to greater wear then the remaining threads. Such wear in combination with the incomplete threads at the end of the product thread permit further entry in the gage. The NOT GO functional diameter limit is acceptable when the NOT GO thread ring gage as applied to the product external thread does not pass over the thread more than three complete turns. The gage should not be forced. Special requirements such as exceptionally thin or ductile material, small number of threads, etc., may necessitate modification of this practice.

5.2.2 Basic Design. To better check the NOT GO functional diameter limit, the flank contact is less than that of the GO gage, and the length of the gaging element where practical is less than that of the GO gage.

5.2.3 Gage Blanks. For practical and economic reasons, the designs and thicknesses of thread ring gages have been standardized for various size ranges and pitches (see ANSI/ASME B47.1aM or Table C1).

5.2.4 Thread Form. The specifications for thread form are summarized in Table 7 and Fig. 20.

5.2.5 Thread Crests. The minimum minor diameter of the NOT GO thread ring gage shall be equal to the minimum pitch diameter of the external thread minus $0.2P$, with a plus gage tolerance. This corresponds to a width of flat at the crest of the gage equal to $0.385P$ (see Table 8).

5.2.6 Thread Roots. The major diameter of the NOT GO thread ring gage shall clear the product thread by using a clearance cut of $0.385P$ width and approximately central. The NOT GO thread ring gage shall clear the maximum major diameter of the full-form portion of the truncated thread-setting plug for the NOT GO thread

Copyright ASME International
Provided by IHS under license with ASME
No reproduction or networking permitted without license from IHS
Not for Resale

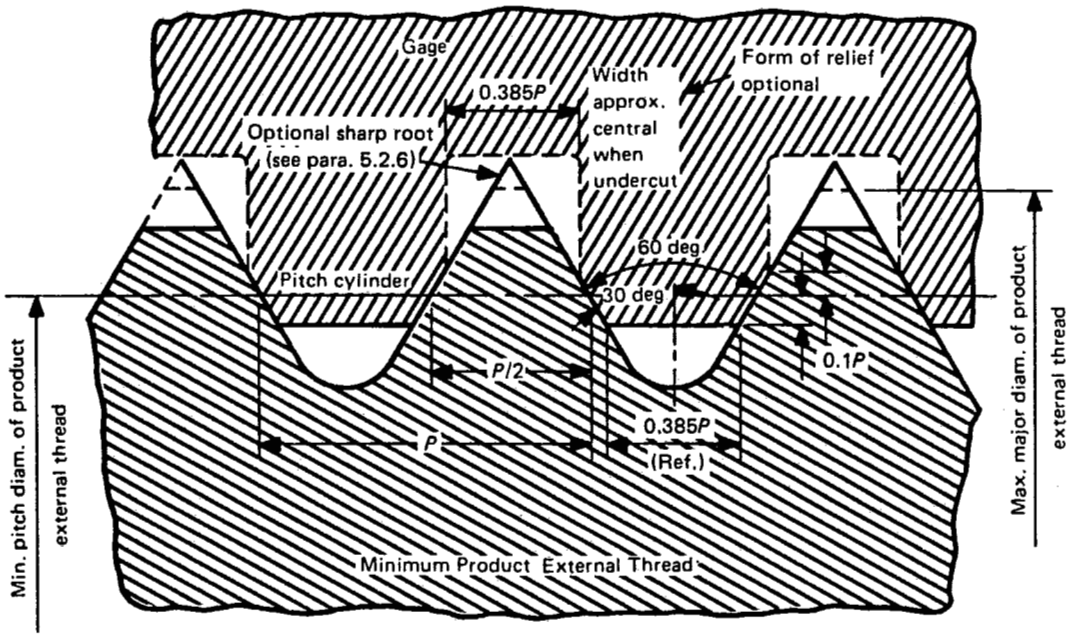

FIG. 20 NOT GO FUNCTIONAL DIAMETER LIMIT
(Ref. Table 1 — Column B_1)

ring gage. Thus, contact of the thread gage can occur on the sides of the threads, but not on the crest or root. Also, the effect of angle variation on the fit of the gage with the product thread is minimized.

5.2.7 Runout of Pitch and Minor Diameter Cylinders. The permissible minimum effective minor diameter, as determined by subtracting the runout measurement (full-indicator movement) with respect to the pitch cylinder from the measured minor diameter, shall not be less than the specified minimum minor diameter minus twice the sum of the gage tolerances for pitch and minor diameter.

5.2.8 Pitch Cylinder. The pitch cylinder is transferred by the setting of the thread ring gage to the applicable truncated setting plug gage.

5.2.9 Lead and Half-Angle. Lead and half-angle variations shall be within the limits specified in Table 9.

5.2.10 Incomplete Thread. The feather edge at both ends of the thread ring gage shall be removed. On gages larger than 12 mm nominal size, or having pitches coarser than 1.25 mm, one complete thread ± ¼ turn of the end threads shall be removed to obtain a full-thread blunt start. On gages 12 mm nominal size and smaller or having pitches of 1.25 mm or finer, a 60 deg. chamfer from the axis of the gage is acceptable in lieu of the blunt start.

5.2.11 Identification. The NOT GO thread gage should be marked with the metric nominal size, ×, pitch-tolerance class, NOT GO, PD, and pitch diameter in millimeters.

EXAMPLE:
MJ8×1-4h6h NOT GO PD7.279

ANSI/ASME B1.16M NOT GO ring gages are interchangeable with MJ thread gages for the same class of thread.

5.3 Thread Snap Gages — GO Segments or Rolls (Table 1 — Gages 2.1 and 2.3)

5.3.1 Purpose and Use. The thread snap gage with two GO threaded segments or two GO zero-lead rolls inspects the maximum-material GO functional limit A_1 of product external thread. The setting of the GO segments or rolls represents the maximum-material GO functional limit of the product external thread, and its purpose is to assure interchangeable assembly of maximum-material mating parts. The gaging length of the

Copyright ASME International
Provided by IHS under license with ASME
No reproduction or networking permitted without license from IHS
Not for Resale

segments or rolls is equal to the length of the standard GO ring gages. The segments or rolls have a cumulative check of all thread elements except the major diameter.

The GO thread snap gage can check roundness of the pitch cylinder for 180 deg. ovality by using the gage at different external diametral locations on the product thread.

5.3.2 Basic Design. The GO segments and rolls assembled into gage frames are the design of the individual gage manufacturer. The lengths of the two threaded segments and the two thread rolls spaced 180 deg. apart are equal to the standard GO ring gage blank lengths for practical and economic reasons (see ANSI/ASME B47.1aM or Table C1).

GO thread segments shall engage 25% or more of the product circumference. Product shall be checked around full circumference of thread at sufficient axial positions to check the full thread length. Thread rolls shall be applied at several locations (three if possible) axially over the full thread length of the product. The circumference shall be checked at each position.

5.3.3 Thread Form. The specifications for thread form are summarized in Table 7 and Fig. 21.

5.3.4 Thread Crests. The distance between the minor diameter of the GO thread segments and the outside diameter of the GO thread rolls shall be equal to the minimum pitch diameter of the product internal thread minus $\frac{3}{8}H$ with a minus gage tolerance when assembled in the gage frame. This corresponds to a width of flat of $\frac{5}{16}P$. The thread crests shall be flat in an axial plane and parallel to the axis.

5.3.5 Thread Roots. The major diameter of the GO thread segments and root diameter of the GO rolls shall be cleared beyond a $P/8$ flat either by an extension of the flanks of the thread toward a sharp vee or by an undercut no greater than $P/8$ maximum width and approximately central. The root clearance must be such that the maximum major diameter of the full-form section of the truncated thread-setting plug gage is cleared after the gage has been properly set to size.

5.3.6 Runout. The pitch and minor cylinders of the threaded portion of the GO segments or rolls shall not exceed the specified runout as determined by measurements of runout (full-indicator movement). On each gaging member, with respect to the pitch cylinder, runout shall not exceed one-half the X gage minor diameter tolerance.

5.3.7 Pitch Cylinder. The pitch cylinder of the threaded GO segments and rolls shall be straight within the X gage pitch diameter limits specified.

5.3.8 Lead, Pitch, and Half-Angle Variations. Lead, pitch, and half-angle variations shall be within the limits specified (see Table 9).

5.3.9 Identification. The assembled gage should be marked with the metric nominal size, ×, pitch-tolerance class, GO, PD, and pitch diameter in millimeters.

EXAMPLE:
MJ8×1-4h6h GO PD7.350

ANSI/ASME B1.16M GO snap gages are *not* interchangeable with MJ thread gages.

5.4 Thread Snap Gages — NOT GO Segments or Rolls (Table 1 — Gages 2.2 and 2.4)

5.4.1 Purpose and Use. The thread snap gage with two NOT GO segments or two NOT GO rolls inspects the NOT GO functional diameter limit B_1 of product external thread. The setting of the NOT GO segments or rolls represents the NOT GO functional diameter limit of the product external thread. In applying the thread snap limit gage, the NOT GO functional diameter limit is acceptable when gaging elements do not pass over the product thread.

The NOT GO thread snap gage can check roundness of the pitch cylinder for 180 deg. ovality by passing the gage over the thread at different diametral locations on the external thread.

The NOT GO thread snap gage can check taper of the pitch cylinder by passing the gage over the thread at different locations axially on the external thread.

5.4.2 Basic Design. In order that the NOT GO thread snap gage may effectively check the NOT GO functional diameter limit, the flank contact is reduced by truncating the thread on segments and rolls. Since the design of the segments or rolls is different with each gage manufacturer, the number of threads engaged in product thread will vary. Usually, the number of pitches engaged is approximately two.

5.4.3 Thread Form. The specifications for thread form are summarized in Table 7 and Fig. 22.

5.4.4 Thread Crests. The minor diameter of the NOT GO thread segments and the inner distance between the outside diameters of NOT GO thread rolls shall be equal to the minimum pitch diameter of the product external thread minus $0.2P$ with a plus gage tolerance when assembled in the gage frame. This corresponds to a width of flat at the crest equal to $0.385P$ (see Table 7).

5.4.5 Thread Roots. The major diameter of the NOT GO thread segments or root diameter of the NOT

Copyright ASME International
Provided by IHS under license with ASME
No reproduction or networking permitted without license from IHS

Not for Resale

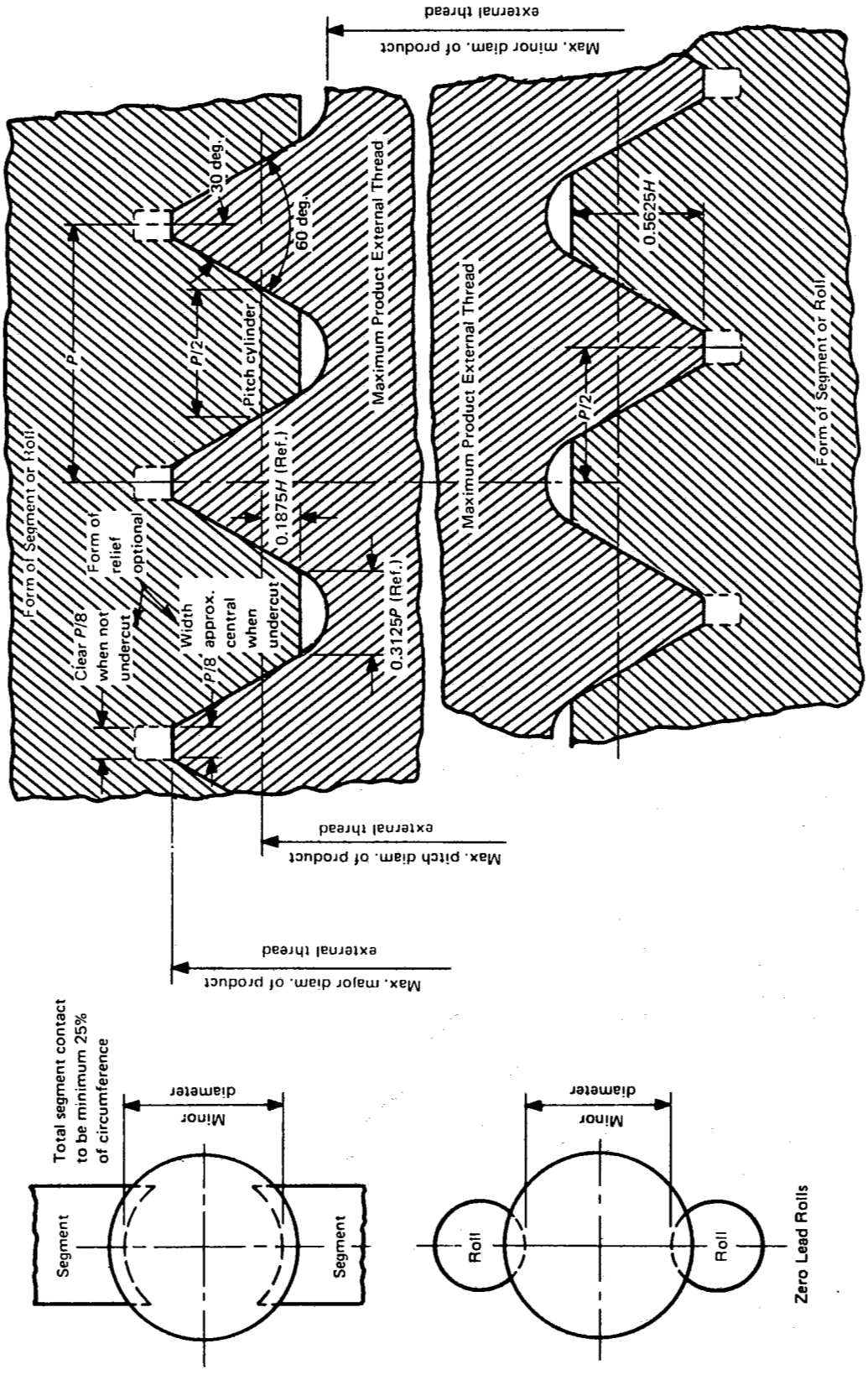

FIG. 21 THREAD SNAP GAGES — MAXIMUM-MATERIAL GO FUNCTIONAL LIMIT (Ref. Table 1 — Column A_1)

Not for Resale

Copyright ASME International
Provided by IHS under license with ASME
No reproduction or networking permitted without license from IHS

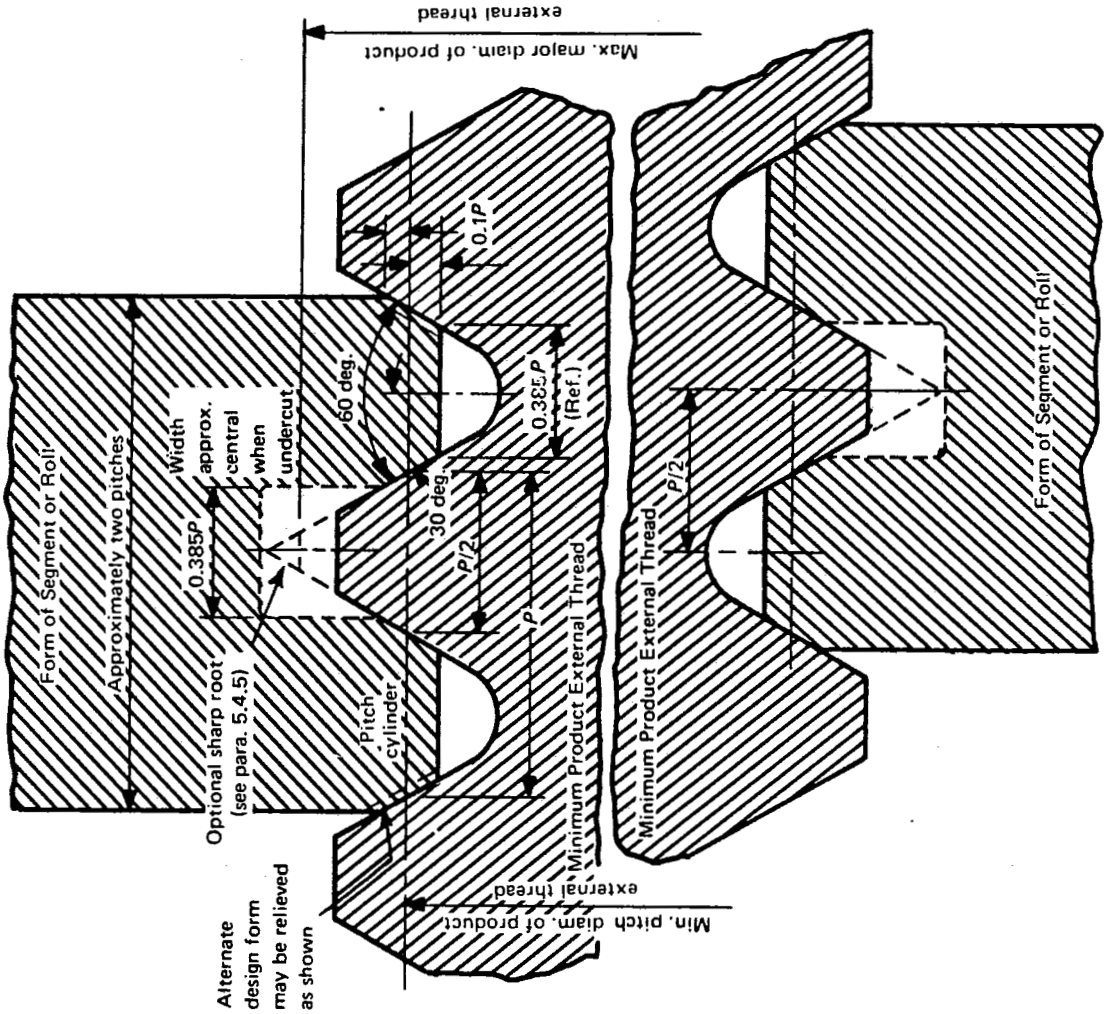

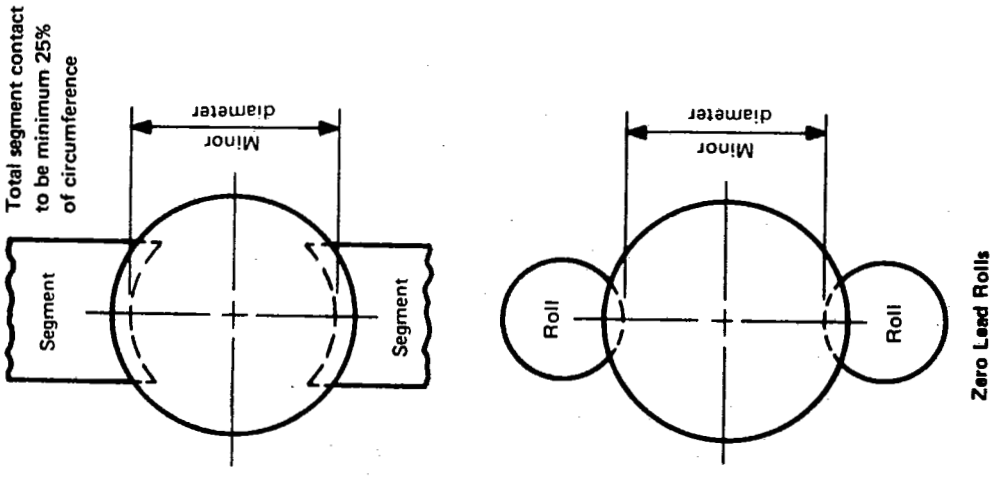

FIG. 22 THREAD SNAP GAGES — NOT GO FUNCTIONAL DIAMETER LIMIT
(Ref. Table 1 — Column B_1)

Copyright ASME International
Provided by IHS under license with ASME
No reproduction or networking permitted without license from IHS

Not for Resale

GO rolls shall clear the product thread by using a clearance cut of 0.385P width approximately central except for threads smaller than 5 mm and pitches smaller than 0.8 mm. Snap gage contacts shall clear the maximum major diameter of the full-form portion of the setting plug for the NOT GO thread snap gage. Thus, contact of the thread gage can occur on the sides of the thread, but not on the crest or root. Also, the effect of angle variation on the fit of the gage with the product thread is minimized.

5.4.6 Runout. The pitch and minor cylinders of the threaded NOT GO segments or the pitch and outside cylinders of the rolls shall not exceed the specified runout as determined by measurement of runout (full-indicator movement). On each gaging member, with respect to the pitch cylinder, runout shall not exceed one-half the X gage minor diameter tolerance.

5.4.7 Pitch Cylinder. The pitch cylinder of the threaded NOT GO segments or rolls shall be straight within the X gage pitch diameter limits specified.

5.4.8 Lead, Pitch, and Half-Angle Variations. Lead, pitch, and half-angle variations shall be within the limits specified (see Table 9).

5.4.9 Identification. The assembled gage should be marked with the metric nominal size, ×, pitch-tolerance class, NOT GO, PD, and pitch diameter in millimeters.

EXAMPLE:
MJ8×1-4h6h NOT GO PD7.279

ANSI/ASME B1.16M NOT GO snap gages are interchangeable with MJ thread gages for the same class of thread.

5.5 Thread Snap Gages — Cone and Vee (Table 1 — Gage 2.5)

5.5.1 Purpose and Use. The thread snap gage with cone and vee rolls or segments inspects the minimum-material limit pitch diameter C_1. The setting of the cone and vee rolls or segments represents the minimum-material limit pitch diameter of the product external thread.

The cone and vee snap gage can check roundness of the pitch cylinder for 180 deg. ovality by passing the gage over the thread at different diametral locations on the external thread.

The cone and vee snap gage can check taper of the pitch cylinder by passing the gage over the thread at different locations axially on the external thread.

5.5.2 Basic Design. The segments are usually made having a surface contact at or slightly above the pitch line near the center of the flank. The rolls make point or line contacts approximately at the pitch line, depending upon the angle variations of the thread flanks. (See Fig. 23 for details.)

5.5.3 Thread Form. The specifications for thread form, thread crests, and thread roots are shown in Fig. 23.

5.5.4 Identification. The assembled gage should be marked with the metric nominal size, ×, pitch-tolerance class, PD, and pitch diameter in millimeters.

EXAMPLE:
MJ8×1-4h6h PD7.279

ANSI/ASME B1.16M cone and vee gages are interchangeable with MJ thread gages for the same class of thread.

5.6 Thread Snap Gages — Minimum Material: Thread-Groove Diameter Type (Table 1 — Gage 2.6)

5.6.1 Purpose and Use. The thread snap gage with radius type ribbed rolls inspects the minimum-material pitch diameter limit D_1. The setting of the thread-groove diameter type snap gage by NOT GO setting plug gage represents the minimum-material limit pitch diameter of the product external thread.

The thread-groove diameter type snap gage can check roundness for 180 deg. ovality by passing the gage over the thread at different diametral locations on the external thread.

The thread-groove diameter type snap gage can check taper of the pitch cylinder by passing the gage over the thread at different locations axially on the external thread.

5.6.2 Basic Design. The thread-groove diameter type has "best size" thread wire radius ribbed rolls which contact at the pitch line.

5.6.3 Thread Form. The specifications for radius type rolls are shown in Fig. 24.

5.6.4 Identification. The assembled gage should be marked with the metric nominal size, ×, pitch-tolerance class, PD, and pitch diameter in millimeters.

EXAMPLE:
MJ8×1-4h6h PD7.279

ANSI/ASME B1.16M thread-groove diameter gages are interchangeable with MJ thread gages for the same class of thread.

Copyright ASME International
Provided by IHS under license with ASME
No reproduction or networking permitted without license from IHS

Not for Resale

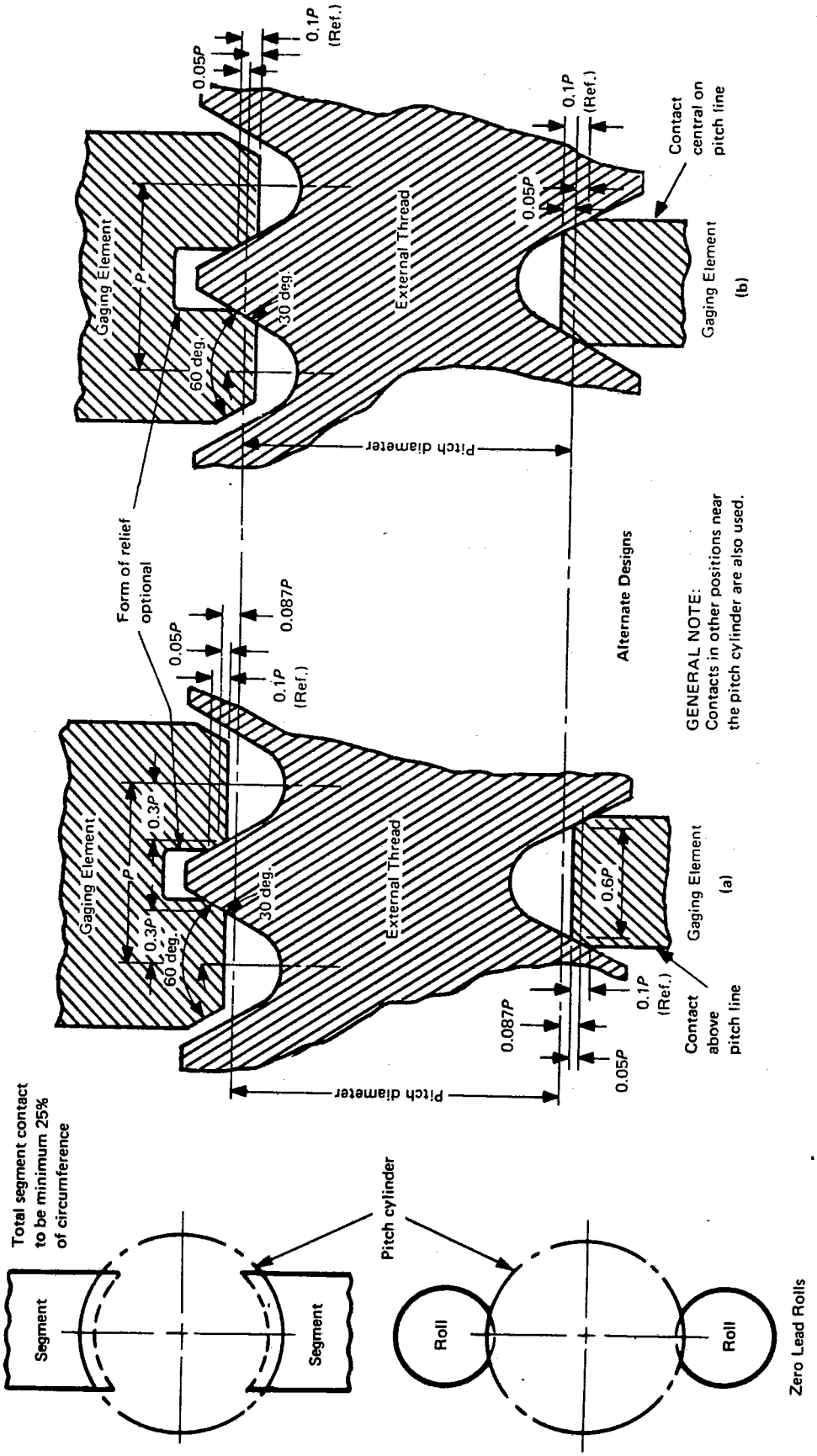

FIG. 23 THREAD SNAP GAGES — MINIMUM-MATERIAL PITCH DIAMETER LIMIT — CONE AND VEE
(Ref. Table 1 — Column C_1)

Copyright ASME International
Provided by IHS under license with ASME
No reproduction or networking permitted without license from IHS

Not for Resale

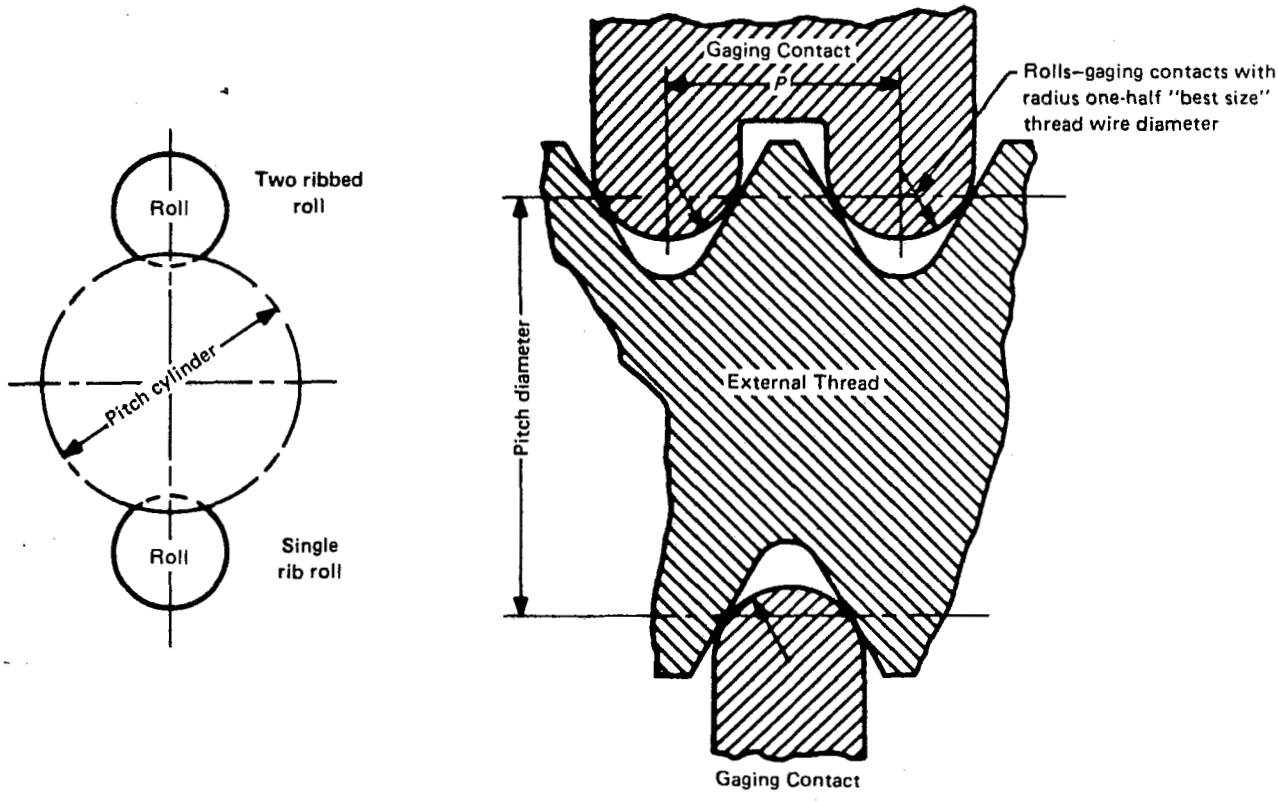

FIG. 24 THREAD SNAP GAGES — MINIMUM-MATERIAL THREAD-GROOVE DIAMETER LIMIT (Ref. Table 1 — Column D_1)

5.7 Plain Ring and Snap Gages to Check Major Diameter of Product External Threads [Table 1 — Gages 3.1(a) and (b), 3.2, and 3.4]

5.7.1 Purpose and Use. The GO and NOT GO cylindrical ring and plain snap gages inspect the major diameter of the product external thread. The GO gage must completely receive or pass over the major diameter of the product external thread to assure that the major diameter does not exceed the maximum-material limit. The NOT GO cylindrical ring gage or NOT GO plain snap gage must not pass over the major diameter of the product external thread to assure that the major diameter is not less than the minimum-material limit.

In the inspection procedure, the snap gage should verify the first check by rotation of the gage or product 180 deg. for another check.

5.7.2 Design of Gage Blanks and Gages. Plain cylindrical ring blanks and plain progressive adjustable snap gages have been standardized for various size ranges (see ANSI/ASME B47.1aM and Fig. 25).

5.7.3 Identification. Cylindrical rings or plain snap gages should be marked with the metric nominal size, ×, pitch-tolerance class, GO and/or NOT GO, and major diameters in millimeters.

EXAMPLE:
MJ8×1-4h6h GO 8.000 (and/or) NOT GO 7.820

ANSI/ASME B1.16M plain ring and snap gages are interchangeable with MJ thread gages for the same class of thread.

5.7.4 Precision Instruments (Table 1 — Gage 14). Precision instruments such as dial calipers, outside micrometers, vernier calipers, and pocket slide calipers

Copyright ASME International
Provided by IHS under license with ASME
No reproduction or networking permitted without license from IHS

Not for Resale

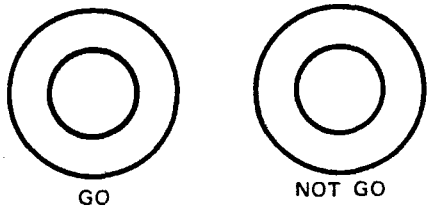

(a) Cylindrical Ring Gages
(made to Class Z tolerance, Table 11)

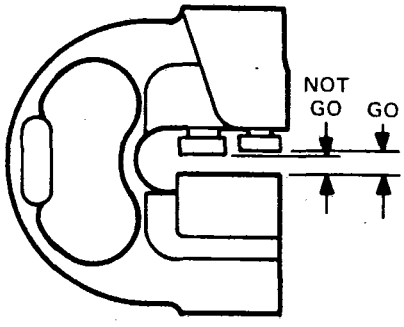

(b) Adjustable Limit Snap Gage
(see ANSI/ASME B47.1aM for details)

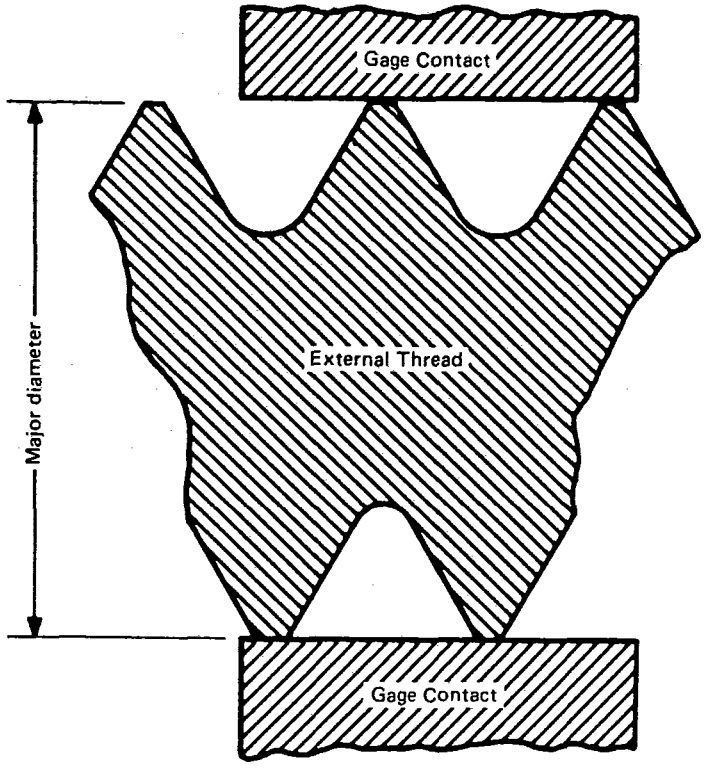

FIG. 25 MAJOR DIAMETER LIMIT
(Ref. Table 1 — Column J_1)

can also be used to measure the major diameter of product external thread.

5.8 Snap Gages for Minor Diameter of Product External Threads (Table 1 — Gages 3.3 and 3.5)

5.8.1 Purpose and Use. The minor diameter thread snap gage is used to inspect the maximum and minimum limits of the minor diameter of the external product MJ thread. The maximum size limit segments or rolls must pass over the product thread. The minimum size limit segments or rolls must not pass over the product thread.

5.8.2 Basic Design. The minor diameter thread snap gage has segments or rolls with a thread form of 55 deg. maximum to assure clearance with 60 deg. product thread flanks. The length of engagement of the maximum size limit segments or rolls is usually three pitches, but often extends to a length equal to the engagement length of the GO thread gage. The length of engagement of the minimum size limit segments or rolls is usually limited to three pitches. (See Fig. 26.)

5.8.3 Identification. Thread snap gages should be marked with the metric nominal size, ×, pitch-tolerance class, GO, NOT GO, minor diameters in millimeters, and MINOR DIAMETER EXTERNAL.

EXAMPLE:
MJ8×1-4h6h GO 6.845 NOT GO 6.714 MINOR DIAMETER EXTERNAL

ANSI/ASME B1.16M snap gages are *not* interchangeable with MJ thread gages.

5.9 Functional Indicating Thread Gages for External Thread (Table 1 — Gages 4.1 and 4.3)

5.9.1 Purpose and Use. The GO indicating thread gage inspects the maximum-material GO functional limit

Copyright ASME International
Provided by IHS under license with ASME
No reproduction or networking permitted without license from IHS

Not for Resale

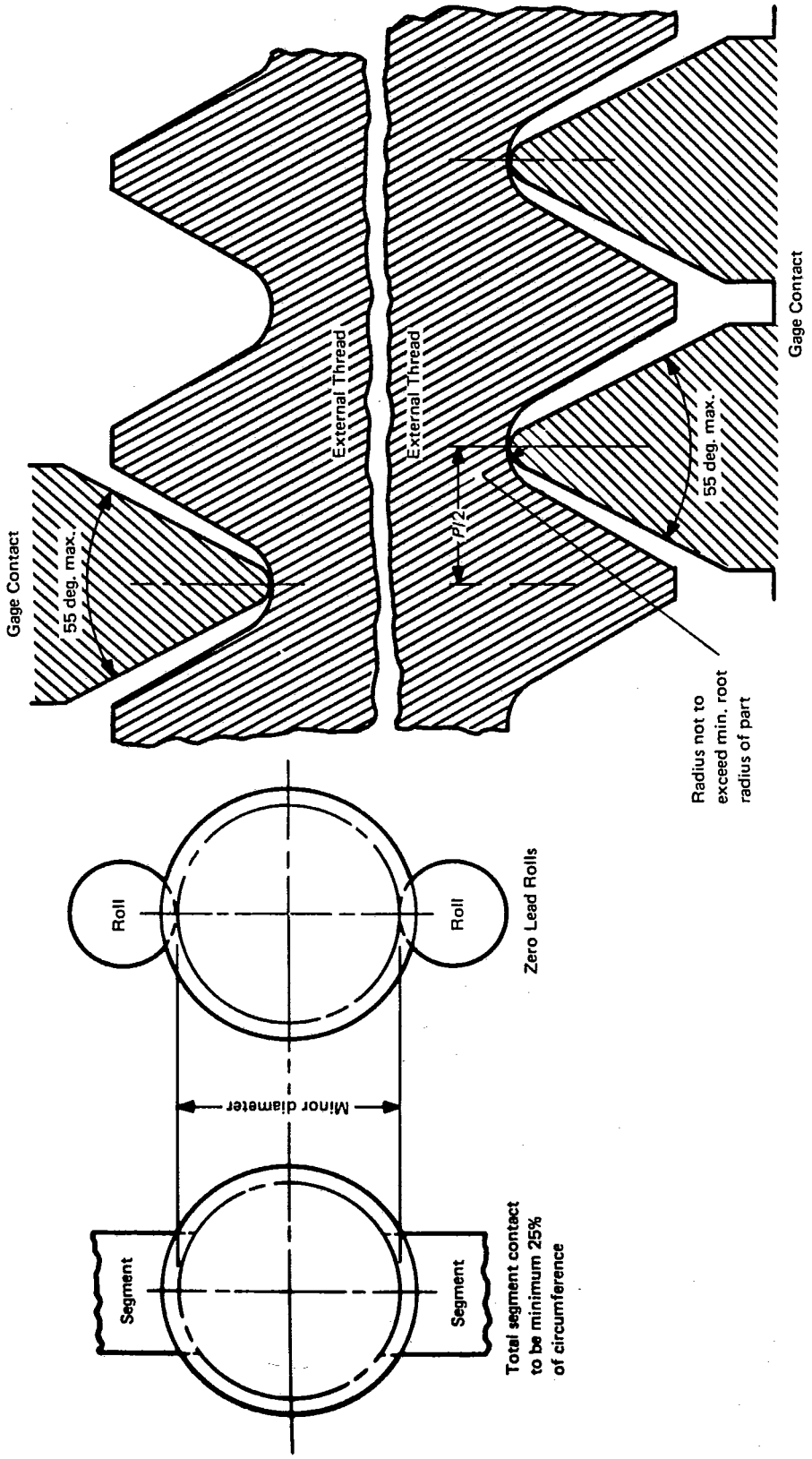

FIG. 26 MINOR DIAMETER LIMIT, SNAP TYPE
(Ref. Table 1 — Column K_1)

Copyright ASME International
Provided by IHS under license with ASME
No reproduction or networking permitted without license from IHS

Not for Resale

and size, A_1 and A_2, and the NOT GO functional diameter limit and size, B_1 and B_2, of product external thread.

The gage is also used to check even or odd lobe roundness of the pitch cylinder. Indicating thread gages must be set to the proper thread-setting plug gages. Readings indicate the position of product external thread within the tolerance range.

5.9.2 Basic Design. Indicating gages have two or three contacts at 180 deg. or 120 deg., respectively. Gages with segments or rolls are designed with the length of the GO functional maximum-material gaging elements equal to the length of the standard GO ring gages.

5.9.3 Thread Form. The specifications for thread form for GO functional maximum-material segments and rolls are summarized in Table 7 and Fig. 27.

5.9.4 Thread Crests. The minor diameter of the GO functional maximum-material thread segments and the diameter of the circle surrounded by the roll cluster of GO functional maximum-material rolls shall be equal to the minimum pitch diameter of the product internal thread minus $\frac{3}{8}H$ with a minus X gage tolerance when assembled in the gage frame. This corresponds to a width of flat of $\frac{5}{16}P$. The thread crests shall be flat in an axial plane and parallel to the axis of the segment or roll.

5.9.5 Thread Roots. The major diameter of the GO functional maximum-material thread segments and the root of the GO functional maximum-material rolls shall be cleared beyond a $P/8$ flat either by an extension of the flanks of the thread toward a sharp vee or by an undercut no greater than $P/8$ maximum width and approximately central. The root clearance must be such that the major diameter of the full-form section of the thread-setting plug gage is cleared after the assembled gage has been properly set to size.

5.9.6 Runout. The pitch and minor cylinders of the threaded segments and the pitch and outside cylinders of the rolls shall not exceed the specified runout as determined by measurements of runout (full-indicator movement). On each gaging member with respect to the pitch cylinder, runout shall not exceed one-half the X gage minor diameter tolerance.

5.9.7 Pitch Cylinder. The pitch cylinder of the thread segments and rolls should be straight within the X gage pitch diameter limits specified.

5.9.8 Lead, Pitch, and Half-Angle Variations. Lead, pitch, and half-angle variations shall be within the limits specified (see Table 9).

5.9.9 Identification. The segments and rolls shall be marked with the metric nominal size and pitch. When the indicating gage is assembled with proper contacts, the gage should be tagged with the metric nominal size, ×, pitch-tolerance class, PD, and pitch diameter limits in millimeters.

EXAMPLE:
MJ8×1-4h6h PD7.350-7.279

ANSI/ASME B1.16M functional indicating gages are *not* interchangeable with MJ thread gages.

5.10 Minimum-Material Indicating Thread Gages for External Thread (Table 1 — Gages 4.5 and 4.6)

5.10.1 Purpose and Use. The indicating thread gage with cone and vee rolls or segments, and the thread-groove diameter type with rolls and pitch diameter ball-type inserts, inspect the minimum-material limit and size, C_1 and C_2, D_1 and D_2, of product external thread. Either type of three-roll and three-segment gage can check roundness of pitch cylinder for 120 deg. lobing and taper of pitch cylinder. The two rolls, two segments, and PD balls check even lobing roundness and taper. The indicating gages are set to the proper thread-setting plug gage. Readings indicate the position of the product external thread pitch diameter within the tolerance range.

5.10.2 Basic Design. The cone and vee indicating thread gage has rolls or segments with contact near the pitch line or contact slightly above the pitch line near the center of the flank. The thread-groove diameter type indicating thread gage also has two or three rolls with the radii on the ribs of roll made to "best size" thread wire size. The ball-type indicating gage has two inserts with "best size" thread balls.

5.10.3 Thread Form. The specifications on form of cone and vee rolls and segments, thread-groove diameter type rolls, and ball type are shown in Figs. 28 and 29.

5.10.4 Identification. The assembled gage should be tagged with the metric nominal size, ×, pitch-tolerance class, PD, and pitch diameter in millimeters.

EXAMPLE:
MJ8×1-4h6h PD7.279

ANSI/ASME B1.16M minimum-material indicating gages are interchangeable with MJ thread gages for the same class of thread.

Copyright ASME International
Provided by IHS under license with ASME
No reproduction or networking permitted without license from IHS
Not for Resale

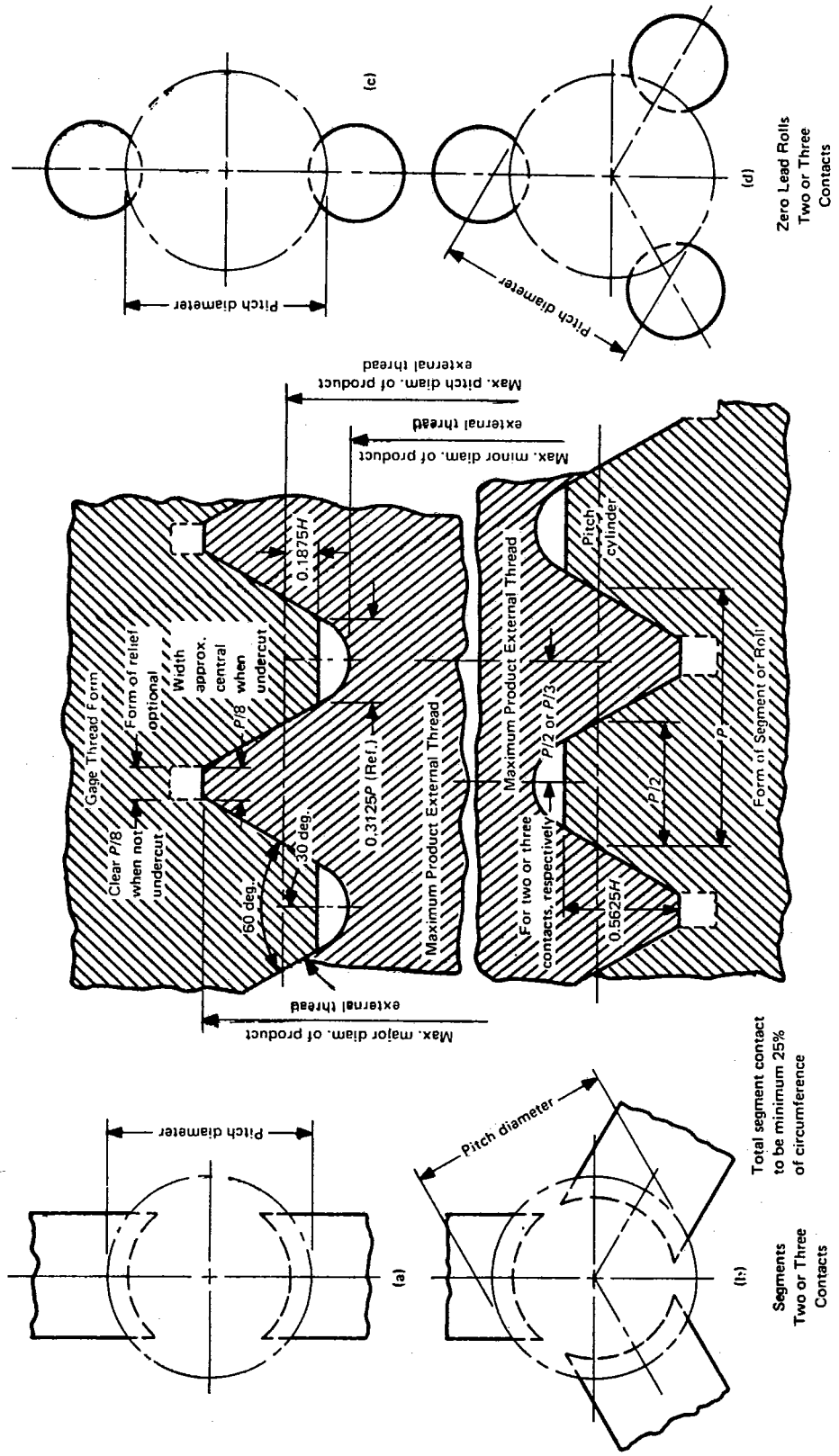

FIG. 27 INDICATING THREAD GAGES — MAXIMUM-MATERIAL GO FUNCTIONAL DIAMETER LIMIT AND SIZE (Ref. Table 1 — Columns A_1 and A_2, B_1 and B_2)

Not for Resale

Copyright ASME International
Provided by IHS under license with ASME
No reproduction or networking permitted without license from IHS

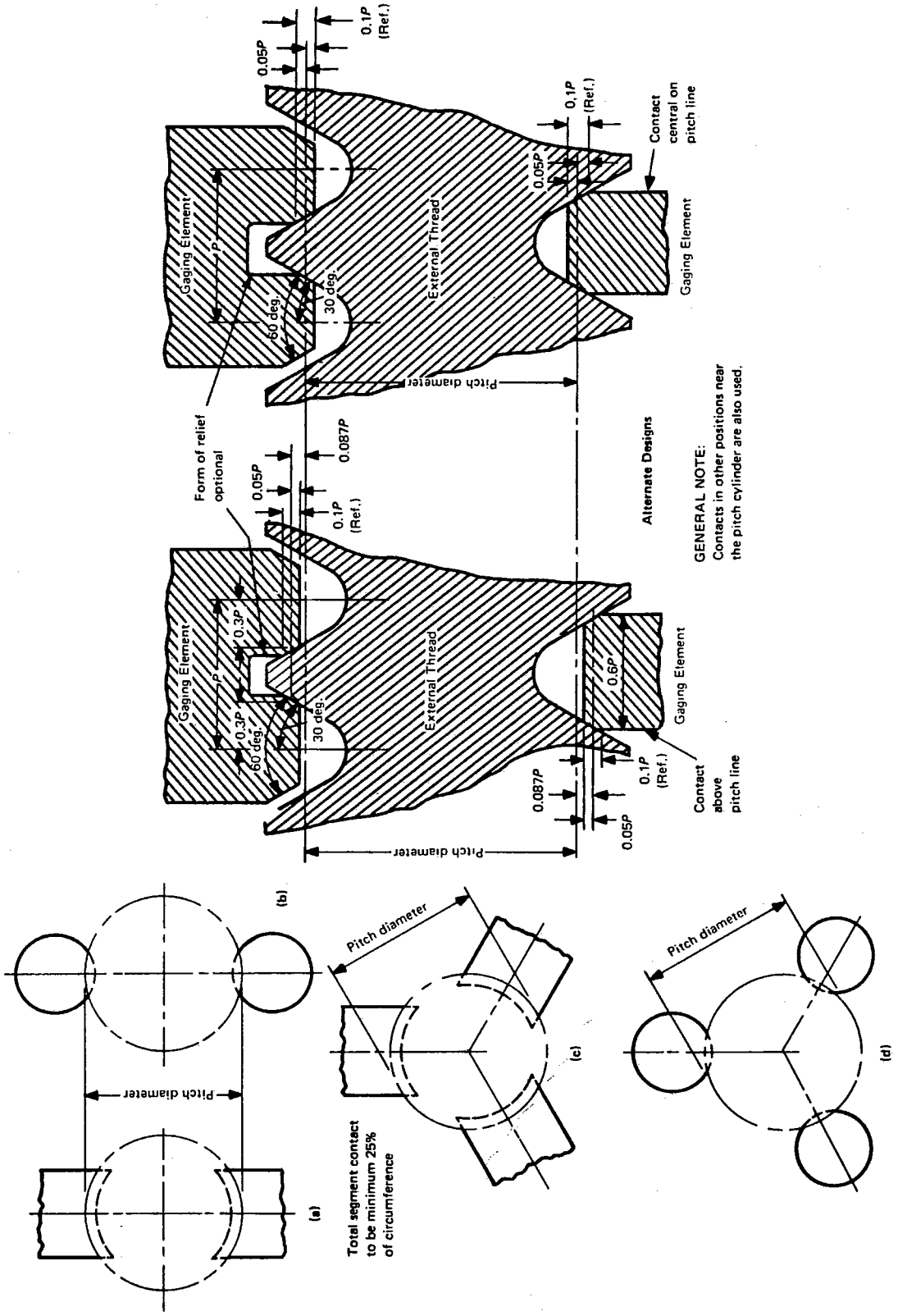

FIG. 28 INDICATING THREAD GAGES — MINIMUM-MATERIAL PITCH DIAMETER LIMIT AND SIZE — CONE AND VEE (Ref. Table 1 — Columns C_1 and C_2)

Copyright ASME International
Provided by IHS under license with ASME
No reproduction or networking permitted without license from IHS

Not for Resale

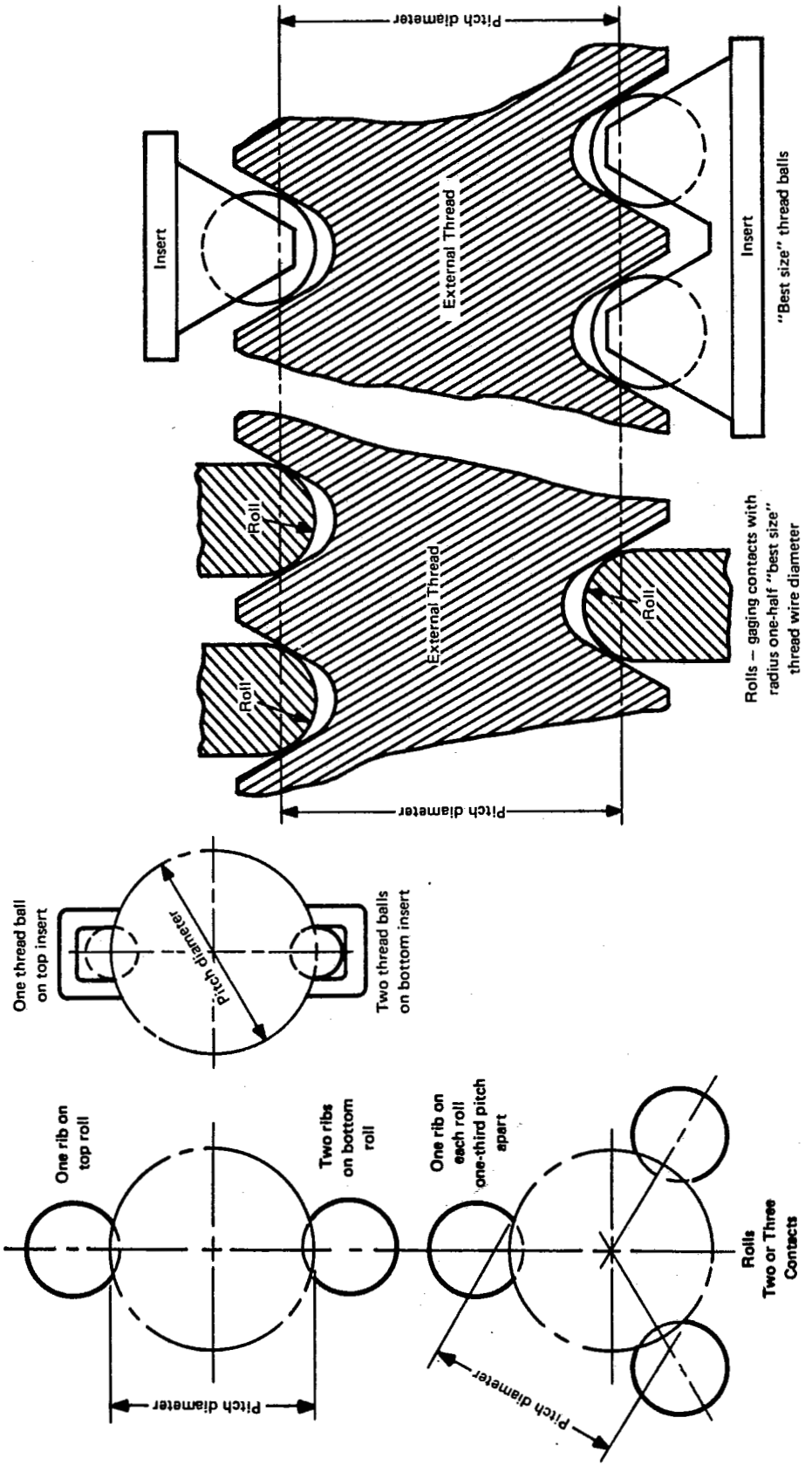

FIG. 29 INDICATING THREAD GAGES — MINIMUM-MATERIAL THREAD-GROOVE DIAMETER LIMIT AND SIZE
(Ref. Table 1 — Columns D_1 and D_2)

Copyright ASME International
Provided by IHS under license with ASME
No reproduction or networking permitted without license from IHS

Not for Resale

5.11 Indicating Runout Gage for External Thread (Table 1 — Gage 4.7)

5.11.1 Purpose and Use. This indicating gage inspects the runout of the major diameter to the pitch diameter, M, of the product external thread. Readings indicate the position of the product major diameter to the pitch diameter within the tolerance specified.

5.11.2 Basic Design. Indicating gages have three contacts, one plain and two threaded, at 120 deg.; or two contacts, one plain and one ball type, or one plain and one threaded, at 180 deg. The threaded segments or roll contacts are minimum-material pitch diameter type (see Fig. 28). Ball type is shown in Fig. 30, sketch (b). The length of the plain and threaded contacts is designed equal to the length of the standard GO ring gages (see ANSI/ASME B47.1aM and Table C1). The indicating gage is set to a basic full-form setting thread plug gage with plain gaging contact on the outside diameter of the thread-setting plug gage and ball, or thread contact on the pitch diameter of the thread-setting plug gage.

5.11.3 Thread Form, Thread Crests, and Lead and Half-Angle Variations. The specifications for thread form, thread crests, and lead and half-angle of thread segments and thread rolls are noted in para. 5.10. Plain contacts have a line bearing on the major diameter of the product (see Fig. 30).

5.11.4 Identification. The gaging elements, segments, balls, or rolls should be marked with the metric nominal size and pitch. When the indicating gage is assembled with proper gaging contacts, the indicating gage should be tagged with the metric nominal size, ×, pitch-tolerance class, and RUNOUT.

EXAMPLE:
MJ8×1-4h6h RUNOUT

5.12 Differential Gaging (Table 1 — Gage 4.8)

5.12.1 Every screw thread has two gaged sizes: functional diameter and pitch diameter. The pitch diameter is the gaged size with the least thread-element variation. The functional diameter is the gaged size that includes all thread-element variations. Only when a screw thread has perfect position and form (see Fig. 31B), i.e., no variations in lead (including helical path), flank angles, taper, straightness, and roundness, are these gaged sizes equal. A variation of a single thread element on an external thread increases the functional size in relation to the pitch diameter. Cumulative thread-element differential gaging measures the sum of all single thread-element variations corresponding to the total pitch diameter change, called pitch diameter equivalent $\Delta d_2 C$. Single thread-element differential gaging measures each portion of the total pitch diameter change generated by lead, composite flank angle, roundness, straightness, and taper.

5.12.2 Purpose. Differential gaging is a variables method for in-process control and/or final conformance inspection that compares the following different types of measured values on the product thread:

(*a*) functional size;

(*b*) pitch or groove diameter size;

(*c*) special sizes between (a) and (b) which isolate variations in lead (helix), flank angle, roundness, straightness, and taper.

The differential readings are the following differences in indicator readings:

(*a*) between different specific types of gage contacts for cumulative thread-element and lead analysis [see Fig. 31A, sketches (a), (b), and (c)];

(*b*) with the same gage contacts used at different locations along and around the thread for roundness, straightness, and taper analysis [see Fig. 31A, sketch (c)];

(*c*) calculated from the above gage readings for composite flank angle analysis.

NOTE: For all differential readings, do not mix measurements using two-roll cluster with three-roll cluster gages.

5.12.3 Basic Design and Differential Reading Procedure

5.12.3.1 Cumulative Thread-Element Differential Gaging. Indicating gages have either three contacts at 120 deg. spacing or two contacts at 180 deg. spacing. The indicating gages with segments or rolls as shown in Figs. 27 and 31A, sketch (a), give the functional size indicating reading Z. The indicating gage with cone and vee segments or rolls with one thread pitch engagement at pitch line (Fig. 28), thread-groove diameter type, and PD ball insert type (Fig. 29), all shown in Fig. 31A, sketch (c), give the pitch diameter size indicating reading X. The difference in the indicator readings Z − X between the types of gages gives the cumulative thread-element differential reading, which corresponds to the pitch diameter equivalent $\Delta d_2 C$ for the combined lead (helix), flank angle, roundness, and taper variations on the product thread (see Fig. 31A).

5.12.4 Single Thread-Element Differential Gaging

5.12.4.1 Lead (Helix) Differential Gaging. The indicating gage reading Y using the full-form thread segments or rolls with one thread pitch engagement, similar

Copyright ASME International
Provided by IHS under license with ASME
No reproduction or networking permitted without license from IHS
Not for Resale

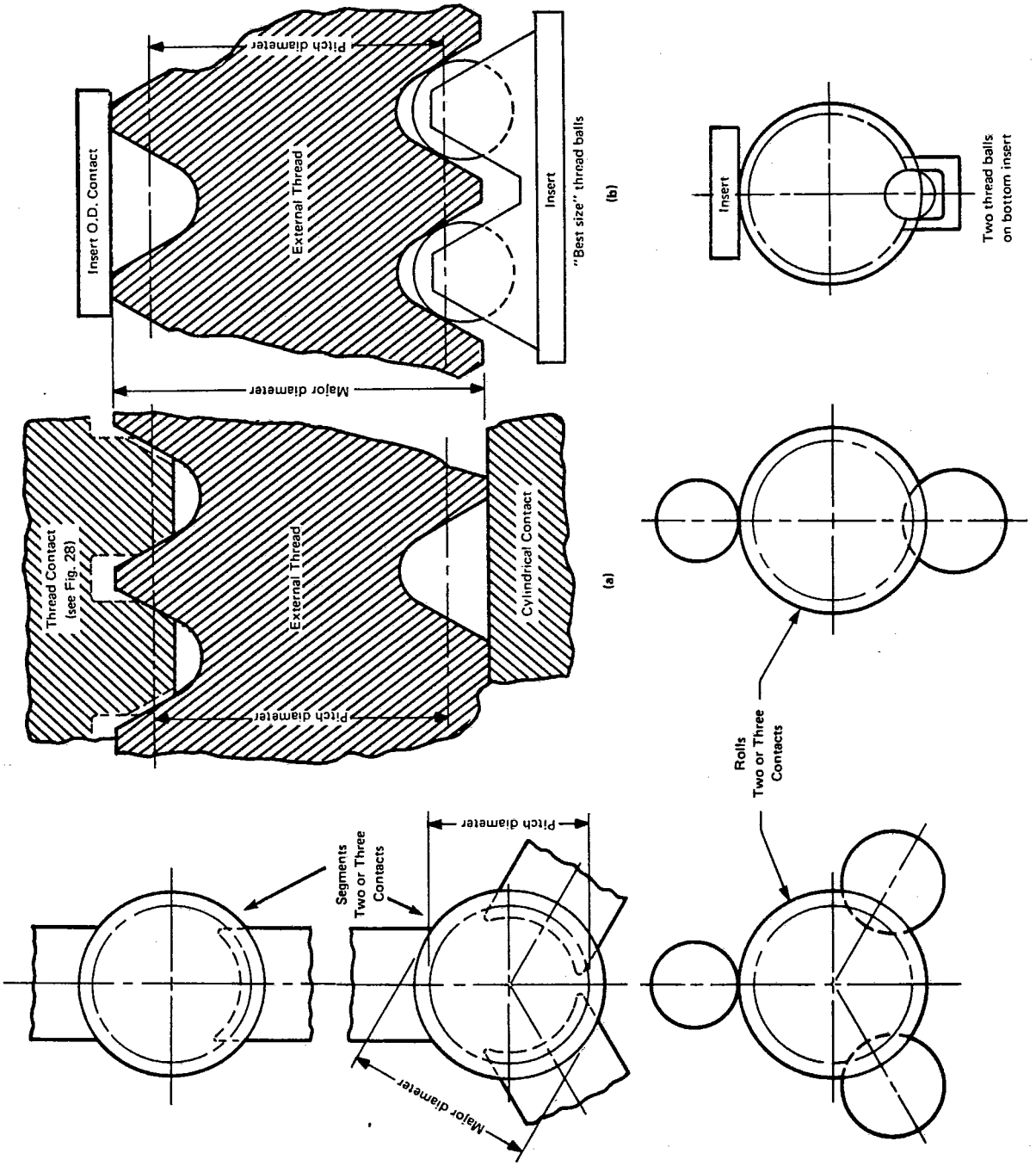

FIG. 30 INDICATING THREAD GAGES — DIAMETER RUNOUT — MAJOR TO PITCH DIAMETER
(Ref. Table 1 — Column M)

Copyright ASME International
Provided by IHS under license with ASME
No reproduction or networking permitted without license from IHS

Not for Resale

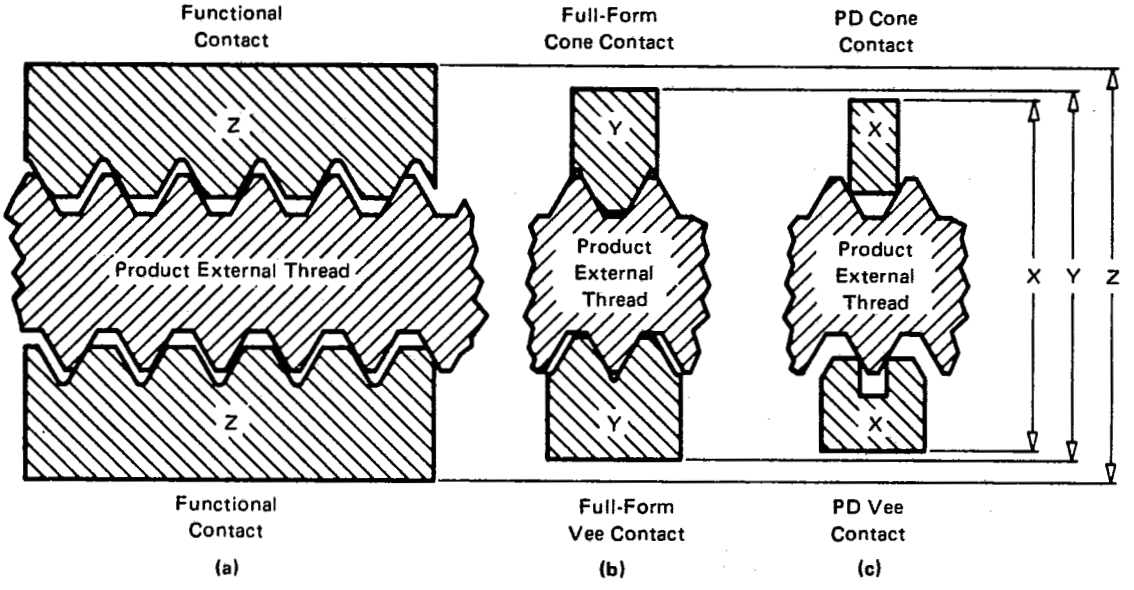

X = indicator reading for (minimum-material) pitch diameter, used for taper, straightness, and roundness measurement
Y = indicator reading used for lead differential analysis
Z = indicator reading for (maximum-material) functional size, used for lead differential analysis
Z-X = cumulative thread-element differential analysis Δd_{2c}
(Z-Y) + Taper/4 = individual element analysis for lead differential $\Delta d_{2\lambda}$ (resultant diameter equivalent)
(Z-X) – [(Z-Y) + Taper/4] = individual analysis for angle differential $\Delta d_{2\alpha}$ (resultant diameter equivalent)

FIG. 31A EXTERNAL IMPERFECT SCREW THREAD

Copyright ASME International
Provided by IHS under license with ASME
No reproduction or networking permitted without license from IHS

Not for Resale

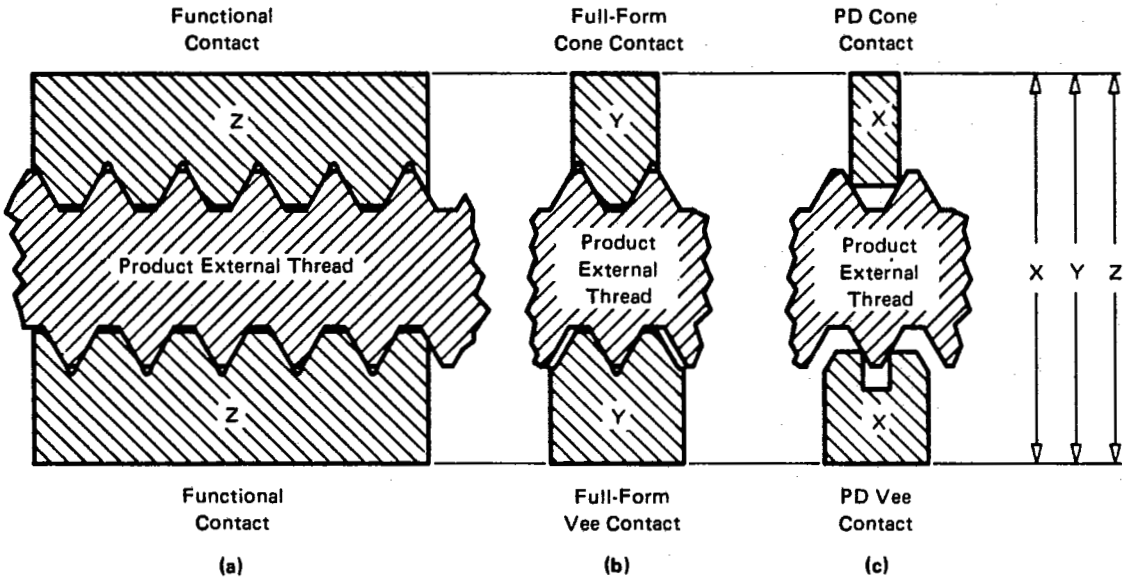

X = Y = Z = indicator readings same for (maximum-material) functional size, (minimum-material) pitch diameter size, and lead and angle size

FIG. 31B EXTERNAL PERFECT SCREW THREAD

Copyright ASME International
Provided by IHS under license with ASME
No reproduction or networking permitted without license from IHS

Not for Resale

to Figs. 27 and 31A, sketch (b), is compared to the reading Z using the functional size gage shown in Figs. 27 and 31A, sketch (a).

The difference between the measured values Z − Y plus one-fourth of taper measurement is the lead differential reading, which corresponds to the pitch diameter equivalent $\Delta d_2\lambda$ for the lead and helix variation on the product thread.

5.12.4.2 Roundness, Straightness, and Taper Differential Gaging. By the use of cone and vee segments or rolls [Figs. 28 and 31A, sketch (c)], thread-groove diameter type [Figs. 29 and 31A, sketch (c)] or PD ball-insert type [Fig. 31A, sketch (c)], the roundness, straightness, and taper of pitch cylinder are checked. Rotate the product between contacts on thread for maximum difference in roundness readings. Two contacts spaced 180 deg. apart give even lobing out-of-round measurement. Three contacts spaced 120 deg. apart give odd lobing out-of-round measurements. Translate the product thread between contacts along the axis of the thread without rotation for maximum difference in straightness and taper.

5.12.4.3 Composite Flank Angle Variation as a Pitch Diameter Equivalent. An approximate diameter equivalent $\Delta d_2\alpha$ for the composite flank angle variation is calculated by subtracting the sum of the lead differential reading Z − Y plus one-fourth of taper measurement from the cumulative thread-element differential reading Z − X.

5.12.5 Thread Form. The functional segments or rolls [Fig. 31A, sketch (a)] are described in para. 5.9. The full-form single-thread vee segment or roll [Figs. 28 and 31A, sketch (b) lower contact] has a depth of thread equivalent to the functional type, but relieved on the outside thread flanks. The full-form cone segment or roll [Figs. 28 and 31A, sketch (b) upper contact] has a $P/8$ flat on outside diameter. The cone and vee segments or rolls [Fig. 31A, sketch (c)] are described and shown in Fig. 28. Thread-groove diameter type [Fig. 31A, sketch (c)] is described and shown in Fig. 29. PD ball-type insert [Fig. 31A, sketch (c)] is described and shown in Fig. 29.

5.12.6 Identification. The gaging elements, segments, rolls, or inserts should be marked with the metric nominal size and pitch. Indicating gages, assembled with proper contacts, should be tagged with the metric nominal size, ×, pitch-tolerance class, and the type of differential reading specified above.

EXAMPLE:
MJ8×1-4h6h LEAD DIFFERENTIAL VARIATION

ANSI/ASME B1.16M differential gages are *not* interchangeable with MJ thread gages.

5.13 Cumulative Form Gaging (Table 1 — Gage 4.10)

5.13.1 Purpose and Use. Cumulative form variation represents the combined size effect of the thread variations resulting from variations in lead (pitch), helix, flank angle, taper, roundness, straightness, and other forms of variation of the thread. It is the maximum measured difference between the GO thread functional indicating gage (see para. 5.9) and the single-element pitch diameter, cone and vee, or thread-groove diameter (see para. 5.10) type gages. Cumulative thread-element differential gaging information in para. 5.12 describes the procedure for measuring cumulative form variation.

5.14 W Tolerance Thread-Setting Plug Gages

5.14.1 Purpose and Use. Thread-setting plug gages are used to set adjustable thread ring gages, check solid thread ring gages, set thread snap limit gages, and set indicating thread gages. Thread-setting plug gages are also applied to detect wear on gages and gaging elements in use. GO thread-setting plug gages are made to the maximum-material limit of the external thread specification, while NOT GO thread-setting plug gages are made to the minimum-material limit of the thread specification.

5.14.2 Basic Design. Thread-setting plug gages are of two standard designs, which are designated as full-form and truncated setting plugs. The full-form GO setting plug is one having a width of flat at the crest equal to $P/8$. The truncated GO setting plug is the same as the full-form setting plug, except that it is longer and the crest of the thread is truncated a greater amount for one-half the length of the gage, giving a full-form portion and a truncated portion. (See Figs. 32 and 33 and Tables 6, 8, and 12.)

5.14.3 Gage Blanks. For practical and economic reasons, the lengths of setting plug gages have been standardized for various size ranges and pitches (see ANSI/ASME B47.1aM or Table C1). The lengths of the full-form and truncated sections are each at least equal in length to the thickness of the corresponding thread ring gage.

5.14.4 Thread Form. The specifications for thread form of setting plug gages are stated in detail below and are summarized in Table 8 and Figs. 32 and 33.

5.14.5 Thread Crests

5.14.5.1 The major diameter of the full-form GO setting plug and of the full-form portion of the truncated GO thread-setting plug is equal to the maximum major diameter of the product external thread.

Copyright ASME International
Provided by IHS under license with ASME
No reproduction or networking permitted without license from IHS
Not for Resale

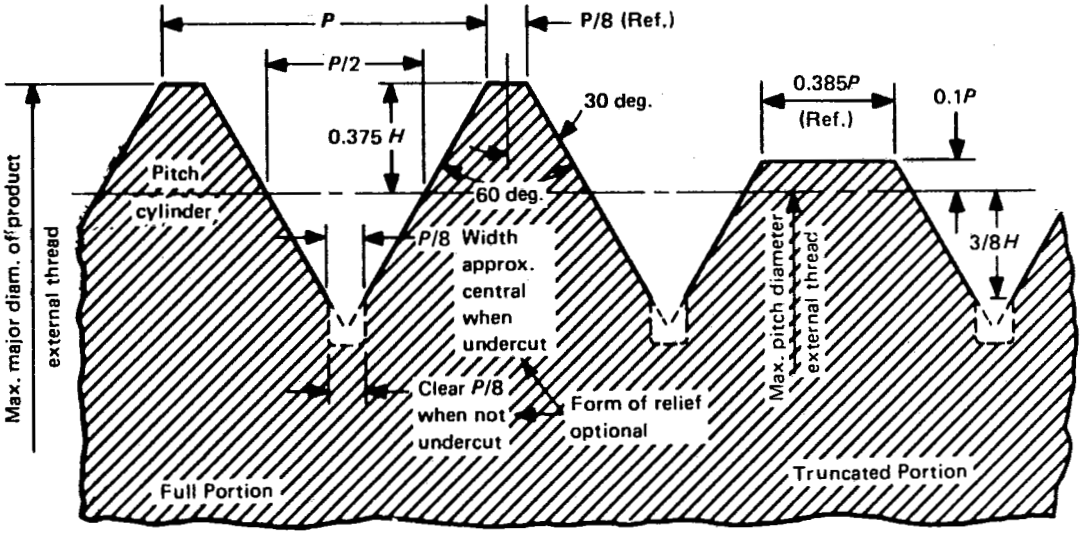

(a) Thread-Setting Plug for Maximum-Material Functional Limit and Functional Size GO Thread Gages

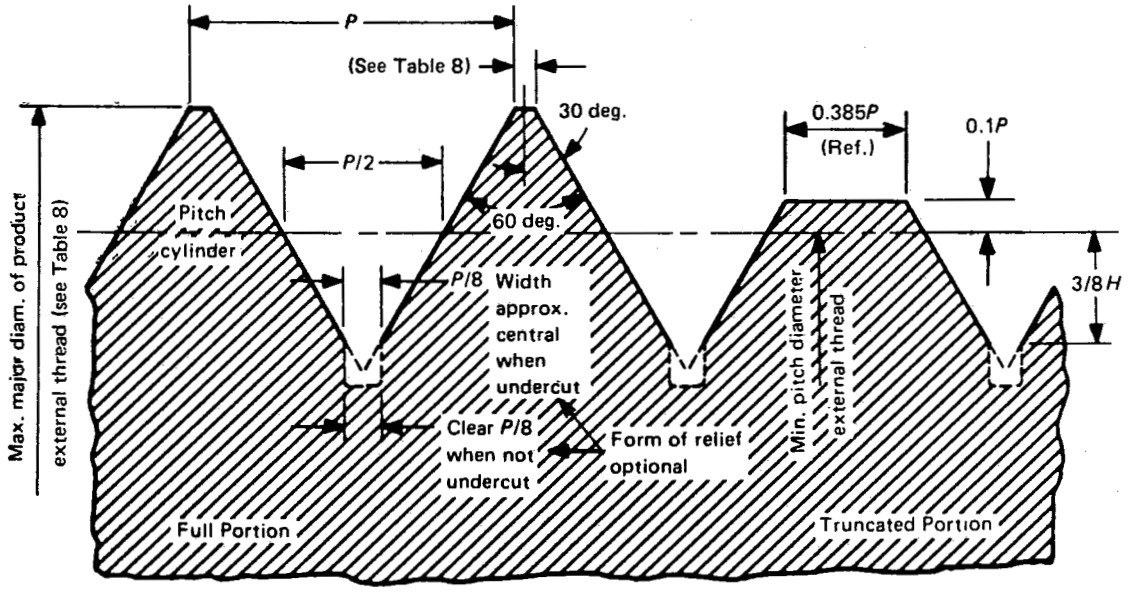

(b) Thread-Setting Plug for Minimum-Material Limit Gages and NOT GO Functional Diameter Gages

FIG. 32 THREAD FORM OF TRUNCATED THREAD-SETTING PLUG GAGES

Copyright ASME International
Provided by IHS under license with ASME
No reproduction or networking permitted without license from IHS

Not for Resale

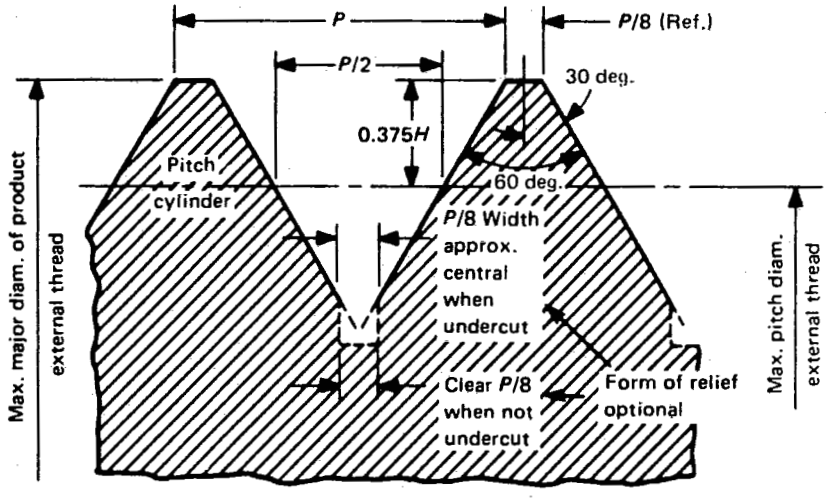

(a) Thread-Setting Plug for Maximum-Material Functional Limit and Functional Size GO Thread Gages

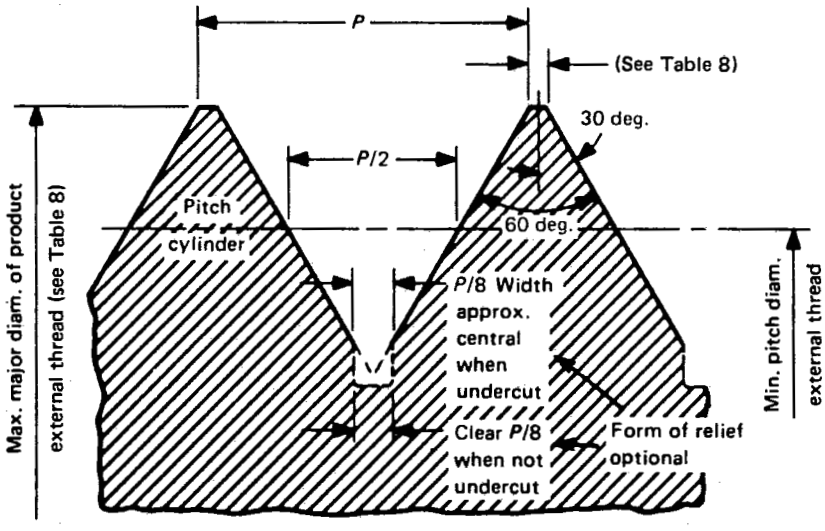

(b) Thread-Setting Plug for Minimum-Material Limit Gages and NOT GO Functional Diameter Gages

FIG. 33 THREAD FORM OF FULL-FORM THREAD-SETTING PLUG GAGES

Copyright ASME International
Provided by IHS under license with ASME
No reproduction or networking permitted without license from IHS

Not for Resale

5.14.5.2 The major diameter of the truncated portion of the truncated GO thread-setting plug is equal to the maximum pitch diameter of the product external thread plus $0.2P$.

5.14.5.3 The major diameter of the full-form NOT GO setting plug and of the full-form portions of the truncated NOT GO thread-setting plug is equal to the maximum major diameter of the product external thread (same as GO thread-setting plug). The maximum major diameter of any gage must correspond to a truncation that is not less than 0.022 mm (equivalent to a crest width of 0.0254 mm). (See Table 8.)

5.14.5.4 The major diameter of the truncated portion of the truncated NOT GO thread-setting plug is equal to the minimum pitch diameter of the product external thread plus $0.2P$.

5.14.6 Thread Roots. The minor diameter of thread-setting plug gages shall be cleared beyond a $P/8$ width of flat either by an extension of the sides of the thread toward a sharp vee or by an undercut no wider than $P/8$.

5.14.7 Pitch Diameter Limitation of Taper. The permissible taper shall be back taper (largest diameter at entering end) and shall be confined within the gage pitch diameter limits.

5.14.8 Incomplete Thread. The feather edge at both ends of the threaded section of the setting plug shall be removed. On pitches coarser than 0.8 mm, one complete thread $\pm 1/4$ turn of the end threads shall be removed to obtain a full-thread blunt start (see Fig. 2). On pitches 0.8 mm and finer, a 60 deg. chamfer from the axis of the gage is acceptable in lieu of the blunt start.

5.14.9 Lead Variations. In the case of truncated setting plugs, the leads present on the full-form portion and the truncated portion of an individual gage shall not differ from each other by more than 0.003 mm over any portion equivalent to the length of the thread ring gage or nine pitches, whichever is less. The specified tolerance shall be applicable to the thread length in the mating ring gage or nine pitches, whichever is smaller. The tolerance on lead establishes the width of a zone, measured parallel to the axis of the thread, within which the actual helical path must lie for the specified length of the thread. Measurements will be taken from a fixed reference point located at the start of the first full thread to a sufficient number of positions along the entire helix to detect all types of lead variations. The amounts that these positions vary from their basic (theoretical) positions will be recorded with due respect to sign. The greatest variation in each direction (plus and minus) will be selected and the sum of their values, disregarding sign, shall not exceed the tolerance limits specified in Table 10.

5.14.10 Half-Angle Variations. Variations in half-angle shall be within the limits specified in Table 10.

5.14.11 Identification

(*a*) The GO thread-setting plug gage shall be marked with the metric nominal size, ×, pitch-tolerance class, GO, SETTING, PD, and GO pitch diameter in millimeters.

EXAMPLE:
MJ8×1-4h6h GO SETTING PD7.350

(*b*) The NOT GO thread-setting plug gage shall be marked with the metric nominal size, ×, pitch-tolerance class, NOT GO, SETTING, PD, and NOT GO pitch diameter in millimeters.

EXAMPLE:
MJ8×1-4h6h NOT GO SETTING PD7.279

(*c*) ANSI/ASME B1.16M setting plug gages are interchangeable with MJ thread gages for the same class of thread.

5.15 Plain Check Plug Gages for Thread Ring Gages

5.15.1 Purpose and Use. GO and NOT GO plain check plug gages verify the minor diameter limits of thread ring gages after the thread rings have been properly set with the applicable thread-setting plug gages.

5.15.2 Basic Design. The directions of gage tolerance on GO and NOT GO plain plug gages for GO ring minor diameter and on GO and NOT GO plain plug gages for NOT GO ring minor diameter are as follows: GO — tolerance plus; NOT GO — tolerance minus. Class X tolerance is used on gages up to 5 mm size. For Class Y tolerance above 5 mm size, see Table 10.

5.15.3 Gage Blanks. For practical and economic reasons, the gaging members and handles have been standardized for various size ranges (see ANSI/ASME B47.1aM).

5.15.4 Identification

(*a*) The GO and NOT GO plain check plug gages for the GO thread ring gage should be marked with the metric nominal size, ×, pitch-tolerance class, GO and NOT GO, GO and NOT GO diameters in millimeters, and GO MINOR DIAMETER CHECK PLUG.

EXAMPLE:
MJ8×1-4h6h GO 7.026 NOT GO 7.013 GO MINOR DIAMETER CHECK PLUG

Copyright ASME International
Provided by IHS under license with ASME
No reproduction or networking permitted without license from IHS

Not for Resale

(*b*) The GO and NOT GO plain check plug gages for the NOT GO thread ring gage should be marked with the metric nominal size, ×, pitch-tolerance class, GO and NOT GO, GO and NOT GO diameters in millimeters, and NOT GO MINOR DIAMETER CHECK PLUG.

EXAMPLE:
MJ8×1-4h6h GO 7.079 NOT GO 7.092 NOT GO MINOR DIAMETER CHECK PLUG

(*c*) ANSI/ASME B1.16M minor diameter check plug gages are *not* interchangeable with MJ thread gages.

5.16 Indicating Plain Diameter Gages — Major Diameter of Product External Threads (Table 1 — Gage 5.1)

5.16.1 Purpose and Measuring Procedures. The indicating plain diameter gage inspects the major diameter, J_1 and J_2, of the external thread. After the plain contacts of the indicating gage are set to a plain diameter setting plug and the dial is read, the gage is placed on the product thread major diameter for a second reading. The difference in readings is applied to the value of the set master to obtain the major diameter size.

5.16.2 Basic Design. Indicating gages have three plain contacts at 120 deg. or two plain contacts at 180 deg. The dimensions of segments or rolls are to the manufacturer's standard. (See Fig. 34.)

5.16.3 Identification. Indicating gages, assembled with proper contacts, should be tagged with the metric nominal size, ×, pitch-tolerance class, major diameter range in millimeters, and MAJOR DIAMETER.

EXAMPLE:
MJ8×1-4h6h 8.000-7.820 MAJOR DIAMETER

ANSI/ASME B1.16M plain indicating gages are interchangeable with MJ gages for the same class of thread.

5.17 Indicating Gages to Check Minor Diameter of External Thread (Table 1 — Gage 5.2)

5.17.1 Purpose and Use. The maximum minor diameter limit, K_1 and K_2, of product external thread is considered acceptable if the product accepts GO thread gages. If further checking is required, the indicating gage with 55 deg. maximum included angle contacts is used to check the minor diameter.

5.17.2 Basic Design. A thread indicating gage with segments or rolls has a thread form of 55 deg. maximum. There are usually three pitches in segments and three ribs on rolls [see Fig. 35, sketch (a)]. Another design is the use of conical contact on one insert and two "best size" thread balls on another contact [see Fig. 35, sketch (b)].

5.17.3 Identification. Indicating gages, assembled with proper rolls, should be tagged with the metric nominal size, ×, pitch-tolerance class, GO, NOT GO, minor diameter limits in millimeters, and MINOR DIAMETER EXTERNAL.

EXAMPLE:
MJ8×1-4h6h GO 6.845 NOT GO 6.714 MINOR DIAMETER EXTERNAL

ANSI/ASME B1.16M indicating gages are *not* interchangeable with MJ thread gages.

5.18 Thread Micrometers (Table 1 — Gages 6, 7, and 14)

5.18.1 Purpose and Use. Thread micrometers with cone and vee anvils are used to inspect the minimum-material pitch diameter limit and size of external thread. The micrometer can check 180 deg. ovality of pitch diameter and taper of pitch diameter. Modified vernier calipers are used similarly.

5.18.2 Basic Design. The depth of thread on cone and vee is either approximately pitch diameter contact or the NOT GO limit profile. Measurements are made in the 0–25 mm and 25–50 mm diameter ranges. The smallest gradation is 0.01 mm.

5.19 Thread-Measuring Wires (Table 1 — Gage 8)

5.19.1 Purpose and Use. Using a measuring machine, product thread can be inspected using three measuring wires between product thread and parallel flat anvils of the measuring machine. Wires are "best size" thread wires contacting at the thread-groove diameter, with two wires on one side and one wire 180 deg. around. This type of measurement checks the minimum-material groove diameter limit and size. By rotating the product thread between wires, the 180 deg. ovality of groove diameter is checked. By measuring at different locations axially, the taper of the groove diameter is checked.

It should be recognized that the measuring force shown for measuring hardened thread gages with wires may not be appropriate for softer product thread materials due to the possibility of the wires being forced into the surface of the thread flanks. This would indicate a smaller thread size than what actually exists. See Appendix B.

Copyright ASME International
Provided by IHS under license with ASME
No reproduction or networking permitted without license from IHS
Not for Resale

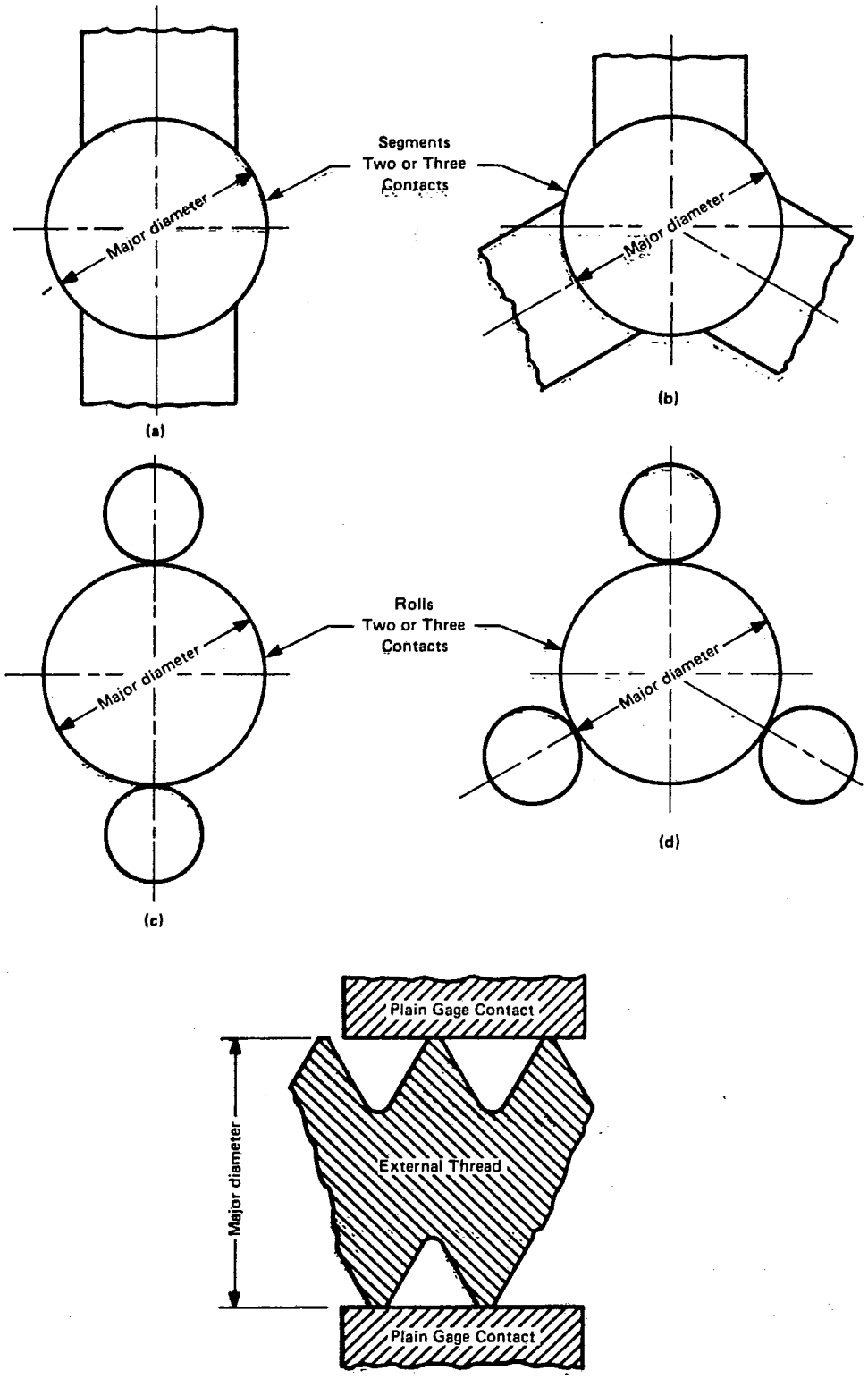

FIG. 34 INDICATING PLAIN DIAMETER GAGES — MAX.-MIN. MAJOR DIAMETER LIMIT AND SIZE

(Ref. Table 1 — Columns J_1 and J_2)

Copyright ASME International
Provided by IHS under license with ASME
No reproduction or networking permitted without license from IHS

Not for Resale

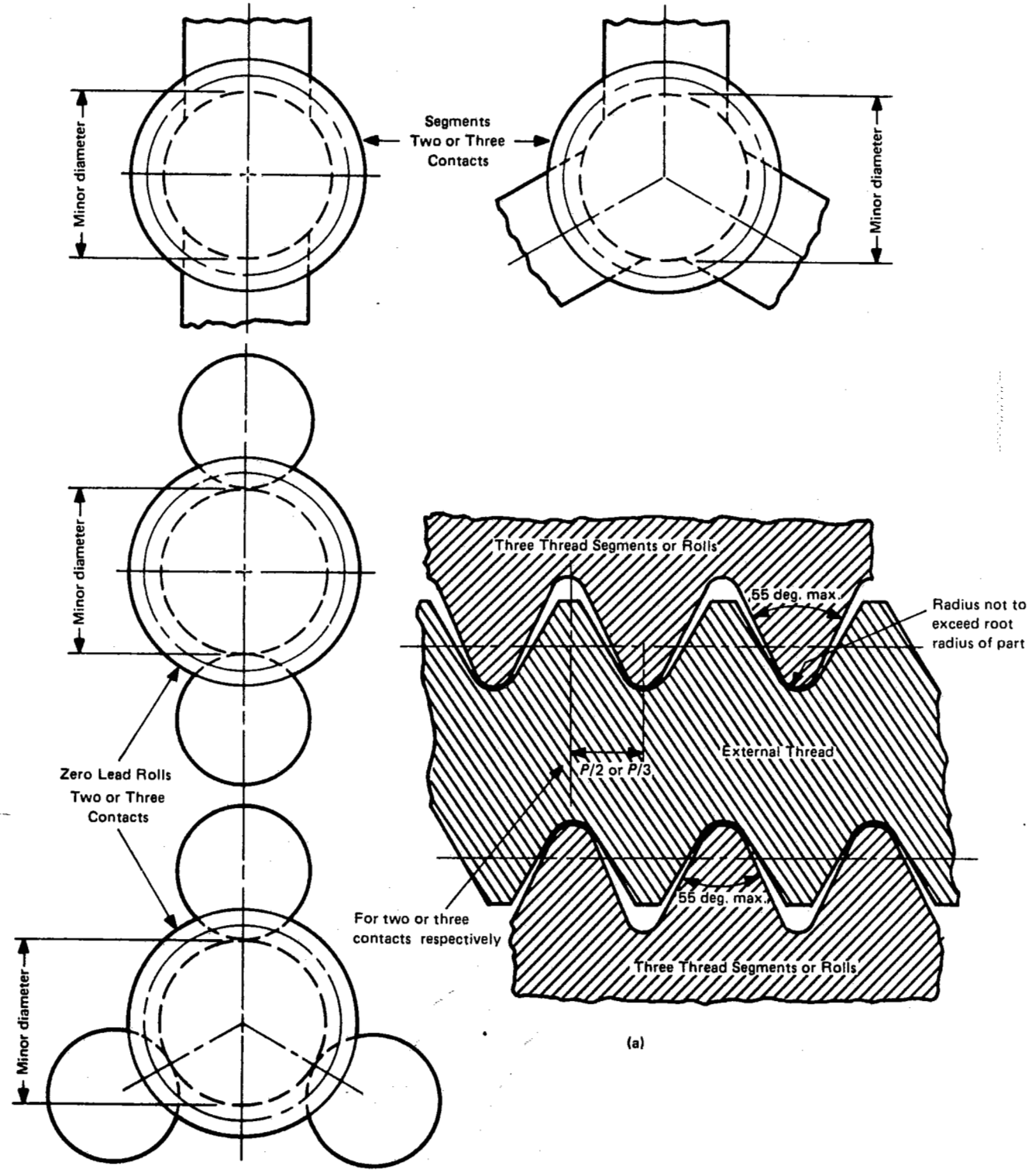

FIG. 35 INDICATING DIAMETER GAGES — MAX.-MIN. MINOR DIAMETER LIMIT AND SIZE (Ref. Table 1 — Columns K_1 and K_2)

Copyright ASME International
Provided by IHS under license with ASME
No reproduction or networking permitted without license from IHS

Not for Resale

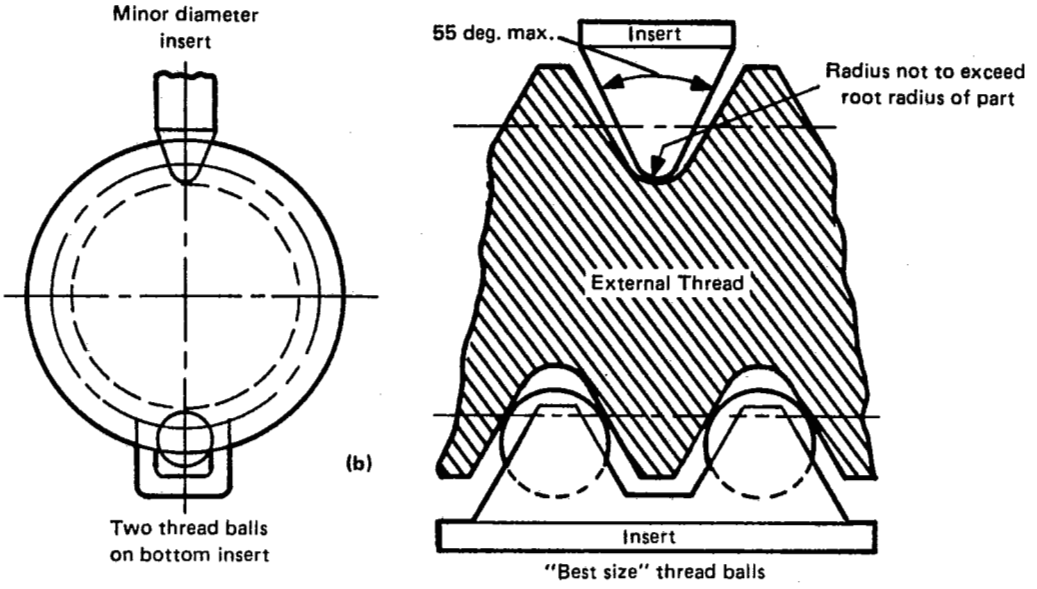

FIG. 35 INDICATING DIAMETER GAGES — MAX.-MIN. MINOR DIAMETER LIMIT AND SIZE (CONT'D)

5.20 Optical Comparator and Toolmaker's Microscope (Table 1 — Gage 9)

5.20.1 Purpose and Use. The optical comparator magnifies and projects the thread profile on a screen. For best profile image, the threaded item is positioned so that the light is aligned with the thread lead angle. Since the thread profile is defined in a plane including the axis, a correction factor may be added to the measured flank angle observed normal to the lead angle. For most standard single-lead threads, the correction factor (see para. A2.6.1) is less than 0 deg. 5 min.

Optical comparators are generally fitted with lenses providing various magnifications between 10× and 100×. Profile dimensions are checked using appropriate linear and angular scales on the machine and by the application of thread profile, radius, and other overlay charts. Other groove and ridge dimensions, and the axial plane pitch and lead may be checked. Major, minor, and pitch diameters are identified and then are measured using table traverse readouts.

5.20.2 The toolmaker's microscope is similar in function to the optical comparator, but does not include screen projection or overlay charts. Magnifications are generally lower than those of optical comparators. Some microscopes have thread profile and radius templates which are inserted in the eyepiece.

5.21 Profile Tracing Instrument (Table 1 — Gage 10)

5.21.1 Purpose and Use. The instrument checks thread contours to an accuracy of 0.005 mm for 25 mm of horizontal and 2.5 mm of vertical travel at 100× magnification. The chart paper trace may be analyzed for elements of the thread profile, including depth, crest width, lead, angle, and radius at root of thread.

5.22 Electromechanical Lead Tester (Table 1 — Gage 11)

5.22.1 Purpose and Use. The electromechanical lead tester consists of a precision, direct-reading headstock in combination with an axially movable carriage supporting a sine bar, two work-mounting centers, an electronic thread-locating head with a ball point, and a milliammeter for registering the center position of the ball probes in the thread groove. The ball point stylus approximates the "best size" thread wire radius. To extend lead measurements beyond 25 mm, gage blocks in 25 mm steps are used to displace the screw thread. Lead measurements accurate to 0.0006 mm are read directly from micrometer scales on headstock.

Copyright ASME International
Provided by IHS under license with ASME
No reproduction or networking permitted without license from IHS
Not for Resale

TABLE 12 CONSTANTS FOR COMPUTING THREAD GAGE DIMENSIONS

Pitch, P	Half Height of Cone Contact, $0.05P$	Distance Between Pitch Cylinder and Half Height of Cone Contact, $0.087P$	Height of Gage Cone Contact, $0.11547H = 0.1P$	Width of Flat on GO Plug, $P/8 = 0.125P$	Two Times Addendum of NOT GO Gages. Also Truncation on Set Plugs, $0.23094H = 0.2P$	Truncation of Internal Thread, $\frac{5}{16}H = 0.27063P$	Width of Flat on GO Ring Thread Crest, $\frac{5}{16}P = 0.3125P$	Dedendum of GO Ring Thread and Addendum of Plug Thread, $\frac{3}{8}H = 0.32476P$	Width of Flat on Thread of NOT GO Ring and NOT GO Plug, $0.385P$	Mean Width of Cone Contact for Internal Thread, $0.4P$	Half Height of Sharp V-Thread, $H/2 = 0.433013P$	Mean Width of Cone Contact for External Thread, $0.6P$	Twice External Thread Height, $\frac{3}{4}H = 0.649519P$	Height of Sharp V-Thread, $H = 0.866025P$	Double Height of Internal Thread, $\frac{7}{8}H = 0.974279P$
1	2	3	4	5	6	7	8	9	10	11	12	13	14	15	16
mm	mm	mm	mm	mm	mm	mm	mm	mm	mm	mm	mm	mm	mm	mm	mm
*0.2	0.010	0.0174	0.020	0.0250	0.040	0.05413	0.06250	0.06495	0.07700	0.08	0.08660	0.12	0.12990	0.17321	0.19486
*0.25	0.012	0.0218	0.025	0.0312	0.050	0.06766	0.07813	0.08119	0.09625	0.10	0.10825	0.15	0.16238	0.21651	0.24357
*0.3	0.015	0.0261	0.030	0.0375	0.060	0.08119	0.09375	0.09743	0.11550	0.12	0.12990	0.18	0.19486	0.25981	0.29228
0.35	0.018	0.0304	0.035	0.0438	0.070	0.09472	0.10938	0.11367	0.13475	0.14	0.15155	0.21	0.22733	0.30311	0.34100
0.4	0.020	0.0348	0.040	0.0500	0.080	0.10825	0.12500	0.12990	0.15400	0.16	0.17321	0.24	0.25981	0.34641	0.38971
0.45	0.022	0.0392	0.045	0.0562	0.090	0.12178	0.14063	0.14614	0.17325	0.18	0.19486	0.27	0.29228	0.38971	0.43843
0.5	0.025	0.0435	0.050	0.0625	0.100	0.13532	0.15625	0.16238	0.19250	0.2	0.21651	0.3	0.32476	0.43301	0.48714
0.6	0.030	0.0522	0.060	0.0750	0.120	0.16238	0.18750	0.19486	0.23100	0.24	0.25981	0.36	0.38971	0.51962	0.58457
0.7	0.035	0.0609	0.070	0.0875	0.140	0.18944	0.21875	0.22733	0.26950	0.28	0.30311	0.42	0.45466	0.60622	0.68199
0.75	0.038	0.0652	0.075	0.0938	0.150	0.20297	0.23438	0.24357	0.28875	0.3	0.32476	0.45	0.48714	0.64952	0.73071
0.8	0.040	0.0696	0.080	0.1000	0.160	0.21650	0.25000	0.25981	0.30800	0.32	0.34641	0.48	0.51962	0.69282	0.77942
1	0.050	0.0870	0.100	0.1250	0.200	0.27063	0.31250	0.32476	0.38500	0.4	0.43301	0.6	0.64952	0.86603	0.97428
1.25	0.062	0.1088	0.125	0.1562	0.250	0.33829	0.39063	0.40595	0.48125	0.5	0.54127	0.75	0.81190	1.08253	1.21785
1.5	0.075	0.1305	0.150	0.1875	0.300	0.40595	0.46875	0.48714	0.57750	0.6	0.64952	0.9	0.97428	1.29904	1.46142
1.75	0.088	0.1522	0.175	0.2188	0.350	0.47360	0.54688	0.56833	0.67375	0.7	0.75777	1.05	1.13666	1.51554	1.70499
2	0.100	0.1740	0.200	0.2500	0.400	0.54126	0.62500	0.64952	0.77000	0.8	0.86603	1.2	1.29904	1.73205	1.94856
2.5	0.125	0.2175	0.250	0.3125	0.500	0.67658	0.78125	0.81190	0.96250	1.0	1.08253	1.5	1.62380	2.16506	2.43570
3	0.150	0.2610	0.300	0.3750	0.600	0.81189	0.93750	0.97428	1.15500	1.2	1.29904	1.8	1.94856	2.59808	2.92284
3.5	0.175	0.3045	0.350	0.4375	0.700	0.94721	1.09375	1.13666	1.34750	1.4	1.51554	2.1	2.27332	3.03109	3.40997
4	0.200	0.3480	0.400	0.5000	0.800	1.08252	1.25000	1.29904	1.54000	1.6	1.73205	2.4	2.59808	3.46410	3.89711
4.5	0.225	0.3915	0.450	0.5625	0.900	1.21784	1.40625	1.46142	1.73250	1.8	1.94856	2.7	2.92284	3.89711	4.38425
5	0.250	0.4350	0.500	0.6250	1.000	1.35315	1.56250	1.62380	1.92500	2.0	2.16506	3.0	3.24760	4.33013	4.87139
5.5	0.275	0.4785	0.550	0.6875	1.100	1.48847	1.71875	1.78618	2.11750	2.2	2.38157	3.3	3.57235	4.76314	5.35853
6	0.300	0.5220	0.600	0.7500	1.200	1.62378	1.87500	1.94856	2.31000	2.4	2.59808	3.6	3.89711	5.19615	5.84567
8	0.400	0.6960	0.800	1.0000	1.600	2.16504	2.50000	2.59808	3.08000	3.2	3.46410	4.8	5.19615	6.92820	7.79423

*Nonstandard pitches

GENERAL NOTE: See Table 4 for additional data.

Copyright ASME International
Provided by IHS under license with ASME
No reproduction or networking permitted without license from IHS
Not for Resale

TABLE 13 CALIBRATION REQUIREMENTS AND STANDARDS FOR X TOLERANCE THREAD GAGES, INDICATING GAGES, PLAIN GAGES, AND MEASURING EQUIPMENT FOR EXTERNAL PRODUCT THREADS

Thread Gages and Measuring Equipment [Note (1)]	Calibration Requirements for Gages and Measuring Equipment [Notes (2), (3)]	Setting Gages and Standards
1 Thread rings (ANSI/ASME B47.1aM)		
1.1 GO ring [Note (4)]	Pitch (also helical offset at split; see para. A3.4), flank angles, minor diameter, pitch diameter, taper of pitch cylinder, straightness, roundness, clearance at root [Note (5)]	W thread-setting plug for GO; X tolerance plain plug for minor diameter for small thread sizes
1.2 NOT GO ring [Note (4)]	Pitch (also helical offset at split; see para. A3.4), flank angles, minor diameter, pitch diameter, taper of pitch cylinder, straightness, roundness, clearance at root [Note (5)]	W thread-setting plug for NOT GO; X tolerance plain plug for minor diameter for small thread sizes
2 Thread snap gages		
2.1 GO segments	Pitch, flank angles, minor diameter, pitch diameter, taper, straightness, clearance at root [Notes (5)-(7)]	W thread-setting plug for GO [Note (8)]
2.2 NOT GO segments	Pitch, flank angles, minor diameter, pitch diameter, clearance at root [Notes (5)-(7)]	W thread-setting plug for NOT GO [Note (8)]
2.3 GO rolls (zero lead)	Pitch, flank angles, width of flat at crest, taper of pitch cylinder on each roll, parallelism of axes of rolls, clearance at root [Notes (5)-(7)]	W thread-setting plug for GO [Note (8)]
2.4 NOT GO rolls (zero lead)	Pitch, flank angles, width of flat at crest, clearance at root [Notes (5)-(7)]	W thread-setting plug for NOT GO [Note (8)]
2.5 Minimum-material, pitch diameter type, cone and vee	Pitch of vee, width of flat at crest, height of thread [Notes (5)-(7)]	W thread-setting plug for NOT GO [Notes (8), (9)]
2.6 Minimum-material, thread-groove diameter type, cone only, "best size" thread wire	Radius of contacts corresponding to "best size" thread wire [Notes (5)-(7)]	W thread-setting plug for NOT GO [Notes (8), (9)]
3 Plain diameter gages		
3.1 (a) Maximum plain cylindrical GO ring for major diameter	Taper, straightness, roundness, diameter	Series of plain plug gages in 0.0025 mm steps or direct diameter measurement with internal measuring equipment using gage blocks equal to the maximum major diameter

Table 13 continues on next page.

Copyright ASME International
Provided by IHS under license with ASME
No reproduction or networking permitted without license from IHS

Not for Resale

TABLE 13 CALIBRATION REQUIREMENTS AND STANDARDS FOR X TOLERANCE THREAD GAGES, INDICATING GAGES, PLAIN GAGES, AND MEASURING EQUIPMENT FOR EXTERNAL PRODUCT THREADS (CONT'D)

Thread Gages and Measuring Equipment [Note (1)]	Calibration Requirements for Gages and Measuring Equipment [Notes (2), (3)]	Setting Gages and Standards
(b) Plain cylindrical NOT GO ring for major diameter	Taper, straightness, roundness, diameter	Series of plain plug gages in 0.0025 mm steps or direct diameter measurement with internal measuring equipment using gage blocks equal to the minimum major diameter
3.2 Major diameter snap type	Parallelism, flatness of contacts, distance between contacts	Plain Z tolerance plug gage or gage blocks with roll corresponding to the maximum major diameter or direct measurement
3.3 Minor diameter snap type (55 deg. maximum included angle)	Pitch, diameter, included angle of thread form, clearance form at tips of snap contacts	Plain Z tolerance plug gage or gage blocks equal to the maximum minor diameter or direct measurement
3.4 Maximum and minimum major diameter snap type	Parallelism, flatness of contacts, distance between contacts	Plain Z tolerance plug gage or gage blocks with roll corresponding to the maximum or minimum major diameter or direct measurement
3.5 Maximum and minimum minor diameter snap type (55 deg. maximum included angle)	Pitch, diameter, 55 deg. maximum included angle of thread form, clearance form at tips of snap contacts	Plain Z tolerance plug gage or gage blocks equal to the maximum or minimum minor diameter
4 Indicating thread gages having either two contacts at 180 deg. or three contacts at 120 deg.		
4.1 GO segments	Pitch, flank angles, minor diameter, pitch diameter, taper, straightness, clearance at root, minor cylinder to pitch cylinder relationship of segments for coaxiality [Notes (5)-(7)]	W thread-setting plug for GO [Note (8)]
4.3 GO rolls (zero lead)	Pitch, flank angles, minor diameter, taper, straightness, clearance at root, parallelism of axes of rolls to each other [Notes (5)-(7)]	W thread-setting plug for GO [Notes (8), (9)]
4.5 Minimum-material, pitch diameter type, cone and vee	Pitch, width of flat at crest, height of thread [Notes (5)-(7)]	W thread-setting plug for GO or for basic pitch diameter or for NOT GO [Notes (8), (9)]
4.6 Minimum-material, thread-groove diameter type, cone only, "best size" thread wire	Radius of contact [Notes (5)-(7)]	W thread-setting plug for NOT GO [Notes (8), (9)]
4.7 Major diameter and pitch diameter runout gage	Pitch and flank angles of thread segments, straightness of plain gages, major cylinder to pitch cylinder relationship of segments for coaxiality [Notes (5)-(7)]	None

Copyright ASME International
Provided by IHS under license with ASME
No reproduction or networking permitted without license from IHS

Not for Resale

TABLE 13 CALIBRATION REQUIREMENTS AND STANDARDS FOR X TOLERANCE THREAD GAGES, INDICATING GAGES, PLAIN GAGES, AND MEASURING EQUIPMENT FOR EXTERNAL PRODUCT THREADS (CONT'D)

Thread Gages and Measuring Equipment [Note (1)]	Calibration Requirements for Gages and Measuring Equipment [Notes (2), (3)]	Setting Gages and Standards
4.8 Differential segments and rolls	GO profile of one pitch segment or roll requires flank angles checked GO full-form segments (see 4.1 above) GO full-form rolls (see 4.3 above) Minimum-material, pitch diameter type, cone and vee (see 4.5 above) Minimum-material, thread-groove diameter type, cone only, "best size" thread wire (see 4.6 above)	Not required; special lead standards
5 Indicating plain diameter gages		
5.1 Major diameter type	Parallelism and flatness of contacts [Note (7)]	Plain Z tolerance plug gage for GO or basic major diameter or gage blocks
5.2 Minor diameter type	Pitch, diameter, 55 deg. maximum included angle of thread form, width of flat on crests	Plain Z tolerance plug gage for basic minor diameter at radiused root
6 Pitch micrometer with standard contacts (approximately NOT GO profile) cone and vee	Pitch, flank angles. Maximum error in indicated measurements up to 25 mm shall not exceed 0.003 mm for pitches up to 0.6 mm, 0.004 mm for pitches greater than 0.6 mm and up to 1.75 mm, and 0.005 mm for pitches greater than 1.75 mm. For measurements greater than 25 mm, error may be increased by 0.001 mm.	W thread-setting plug for basic pitch diameter or GO pitch diameter standard or NOT GO [Note (8)]
7 Pitch micrometer with modified contacts (approximately pitch diameter contact) cone and vee	Pitch, flank angles, width of flat at crest, height of thread. Maximum error in indicated measurements up to 25 mm shall not exceed 0.003 mm for pitches up to 0.6 mm, 0.004 mm for pitches greater than 0.6 mm and up to 1.75 mm, and 0.005 mm for pitches greater than 1.75 mm. For measurements greater than 25 mm, error may be increased by 0.001 mm.	W thread-setting plug for basic pitch diameter or GO or NOT GO [Note (8)]
8 Thread-measuring wires ("best size" thread wire) with suitable measuring means	Flatness and parallelism of spindle and anvil faces, screw calibration, measuring force	Calibrated "best size" thread-measuring wires and gage blocks
9 Optical comparator or toolmaker's microscope with suitable fixturing	Micrometer stage, magnification, radius chart, protractor head [Note (6)]	Gage blocks, plug gages, sine bar

Table 13 continues on next page.

Copyright ASME International
Provided by IHS under license with ASME
No reproduction or networking permitted without license from IHS

Not for Resale

TABLE 13 CALIBRATION REQUIREMENTS AND STANDARDS FOR X TOLERANCE THREAD GAGES, INDICATING GAGES, PLAIN GAGES, AND MEASURING EQUIPMENT FOR EXTERNAL PRODUCT THREADS (CONT'D)

Thread Gages and Measuring Equipment [Note (1)]	Calibration Requirements for Gages and Measuring Equipment [Notes (2), (3)]	Setting Gages and Standards
10 Profile tracing equipment with suitable fixturing	Use manufacturer's instructions to test stylus traverse and electronic amplification	Special angle block supplied with instrument
11 Lead measuring machine with suitable fixturing	Traversing system, straightness of ways, stylus radius	Lead standard, gage blocks
12 Helical path attachment used with GO type indicating gage	Lead, flank angles, taper, straightness, clearance at root [Notes (5)-(7)]	Lead standard
13 Helical path analyzer	Use manufacturer's instructions to test the mechanical and electronic features	Lead standard
14 Plain micrometer and calipers, modified as required	Maximum error in indicated measurements up to 25 mm shall not exceed 0.003 mm for pitches up to 0.6 mm, 0.004 mm for pitches greater than 0.6 mm and up to 1.75 mm, and 0.005 mm for pitches greater than 1.75 mm. For measurements greater than 25 mm, error may be increased by 0.001 mm.	Gage blocks or calibrated plain plug gages
15 Surface measuring equipment	Use manufacturer's instructions for calibration procedures	Precision roughness standard
16 Roundness equipment	Use manufacturer's instructions for calibration procedures	Precision glass sphere, roundness magnification standard

NOTES:
(1) See Table 1.
(2) Use applicable X, W, or Z gage tolerance.
(3) Taper, straightness, including bell-mouth barrel shape and hourglass shape, and roundness shall be within the X, W, or Z tolerance depending on the element measured. In other words, if these features are measured at pitch cylinder, the tolerance for pitch diameter applies.
(4) It is recommended that thread ring gages always be accompanied by a thread-setting plug gage obtained from the same source, in order to allow for a reasonable match of angle and lead variations between the set plug and ring or rings it is controlling. When these rings are relapped or replaced, the same set plug that will be used to control them should be used by the gagemaker. If this set plug is not available when a ring is to be checked, then the thread ring gage must be reset to the same set plug gage that will be used to check it. Thread ring gages should never be shipped or stored with the set plug assembled in the ring.
An adjustable thread ring gage may have to be reset if it is to be checked by a thread-setting plug gage other than the one to which it was originally set, since the exact distribution of gage manufacturing tolerances on the pitch diameter, half-angles, and lead are not likely to be identical on any two setting plug gages. The tolerance on angle and/or lead of the ring gage may be in the opposite direction to the tolerance taken for these elements on the thread-setting plug being used.
(5) Pitch diameter of an internal thread, measured by "best size" ball contacts, will be 0.0025 mm to 0.005 mm larger than the pitch diameter, gaged indirectly by a snug-fitting master thread plug gage or locked segments of an indicating gage which were measured by "best size" wire method.
(6) Use manufacturer's recommended procedures for gage for checking the thread features and alignment of indicating gage components.
(7) New rolls and segments shall be within X tolerance. Worn rolls or segments shall be replaced when a single thread element wears outside of X tolerance.

Copyright ASME International
Provided by IHS under license with ASME
No reproduction or networking permitted without license from IHS
Not for Resale

TABLE 13 (CONT'D)

NOTES (CONT'D)

(8) When the gage is set by adjustment based upon actual measured pitch diameter of the setting master, the master shall meet all W tolerances except for pitch diameter, which may have a tolerance increased to X.

(9) Pitch diameter size on some adjustable thread snap gages and indicating thread gages may be set from one or more of the following:
- (a) Z tolerance plain cylindrical plug gage
- (b) gage blocks
- (c) direct measurement
- (d) specially designed transfer standards

Rolls must be qualified for setting from their outside diameters.

Copyright ASME International
Provided by IHS under license with ASME
No reproduction or networking permitted without license from IHS

Not for Resale

TABLE 14 CALIBRATION REQUIREMENTS AND STANDARDS FOR X TOLERANCE THREAD GAGES, INDICATING GAGES, PLAIN GAGES, AND MEASURING EQUIPMENT FOR INTERNAL PRODUCT THREADS

Thread Gages and Measuring Equipment [Note (1)]	Calibration Requirements for Gages and Measuring Equipment [Notes (2), (3)]	Setting Gages and Standards [Note (4)]
1 Thread plugs (ANSI/ASME B47.1aM)		
1.1 GO plug	Lead, flank angles, major diameter, pitch diameter, taper, straightness, roundness, clearance at root	Three "best size" thread wires, gage blocks
1.2 NOT GO plug	Lead, flank angles, major diameter, pitch diameter, taper, straightness, roundness, clearance at root	Three "best size" thread wires, gage blocks
1.3 Full-form GO plug	Lead, flank angles, major diameter, pitch diameter, minor diameter, taper, straightness, roundness, root radius	Three "best size" thread wires, gage blocks
2 Thread snap gages		
2.1 GO segments	Lead, flank angles, major diameter, pitch diameter, taper, straightness, clearance at root [Notes (5)–(7)]	Solid W thread-setting ring for GO (if direct measurement of pitch diameter is not made) [Notes (7), (8)]
2.2 NOT GO segments	Pitch, flank angles, major diameter, pitch diameter, clearance at root [Notes (5)–(7)]	Solid W thread-setting ring for NOT GO (if direct measurement of pitch diameter is not made) [Notes (7), (8)]
2.3 GO rolls (zero lead)	Pitch, flank angles, width of flat at crest, taper of pitch cylinder on each roll, straightness, parallelism of assembled rolls, clearance at root [Notes (5)–(7)]	Solid W thread-setting ring for GO [Notes (7), (8)]
2.4 NOT GO rolls (zero lead)	Pitch, flank angles, width of flat at crest, clearance at root [Notes (5)–(7)]	Solid W thread-setting ring for NOT GO [Notes (7), (8)]
2.5 Minimum-material, pitch diameter type, cone and vee	Pitch, width of flat at crest, height of thread [Notes (5)–(7)]	Solid W thread-setting ring for NOT GO [Notes (7), (8)]
2.6 Minimum-material, thread-groove diameter type, cone only ("best size" thread balls)	Radius of contacts [Notes (5)–(7)]	Solid W thread-setting ring for NOT GO [Notes (7), (8)]
3 Plain diameter gages		
3.1 (a) Minimum GO plain cylindrical plug for minor diameter	Taper, straightness, roundness, diameter	Gage blocks
(b) Maximum NOT GO plain cylindrical plug for minor diameter	Taper, straightness, roundness, diameter	Gage blocks

Copyright ASME International
Provided by IHS under license with ASME
No reproduction or networking permitted without license from IHS
Not for Resale

TABLE 14 CALIBRATION REQUIREMENTS AND STANDARDS FOR X TOLERANCE THREAD GAGES, INDICATING GAGES, PLAIN GAGES, AND MEASURING EQUIPMENT FOR INTERNAL PRODUCT THREADS (CONT'D)

Thread Gages and Measuring Equipment [Note (1)]	Calibration Requirements for Gages and Measuring Equipment [Notes (2), (3)]	Setting Gages and Standards [Note (4)]
3.2 Minimum major diameter snap type (55 deg. maximum included angle)	Pitch, included angle, dimension over segments or rolls, width of flat at crests [Note (5)]	Plain Z tolerance ring gage for GO major diameter or gage blocks between jaws
3.3 Minimum minor diameter snap type	Taper, straightness or coaxiality of cylindrical segments or rolls, dimension over segments or rolls [Note (5)]	Plain Z tolerance ring gage for GO minor diameter or gage blocks between jaws
3.4 Maximum and minimum major diameter snap type (55 deg. maximum included angle)	Pitch, included angle, dimension over segments or rolls, width of flat at crests [Note (5)]	Plain Z tolerance ring gage for GO major diameter; plain Z tolerance ring gage for NOT GO major diameter or gage blocks between jaws
3.5 Maximum and minimum minor diameter snap type	Taper, straightness, coaxiality of cylindrical segments or rolls, dimension over segments or rolls [Note (5)]	Plain Z tolerance ring gage for GO minor diameter; plain Z tolerance ring gage for NOT GO minor diameter or gage blocks between jaws
4 Indicating thread gages having either two contacts at 180 deg. or three contacts at 120 deg.		
4.1 GO segments	Lead, flank angles, major diameter, pitch diameter, taper, straightness, clearance at root, major cylinder to pitch cylinder relationship of segments for coaxiality [Notes (5)–(7)]	Solid W thread-setting ring for GO or basic pitch diameter [Note (7)]
4.3 GO rolls (zero lead)	Pitch, flank angles, major diameter, taper, straightness, clearance at root, parallelism of axes of rolls to each other [Notes (5)–(7)]	Solid W thread-setting ring for GO [Notes (7), (9)]
4.5 Minimum-material, pitch diameter type, cone and vee	Pitch, width of flat at crest, height of thread [Notes (5), (7)]	Solid W thread-setting ring for GO or NOT GO or basic pitch diameter [Notes (7), (9)]
4.6 (a) Minimum-material, thread-groove diameter type, cone only	Radius of contacts [Note (5)]	W thread-setting ring for NOT GO [Notes (7), (9)]
(b) Minimum-material, thread-groove diameter type, three "best size" thread balls, two ball contact spaced four pitches	Ball diameter [Note (5)]	Plain Z tolerance ring gage whose diameter is basic pitch diameter plus one-half the "best size" thread ball
4.7 Minor diameter and pitch diameter runout gage	Straightness of plain gage segment, pitch, flank angle, straightness of thread segment, minor cylinder to pitch cylinder relationship of segments for coaxiality [Notes (5)–(7)]	None

Table 14 continues on next page.

Copyright ASME International
Provided by IHS under license with ASME
No reproduction or networking permitted without license from IHS

Not for Resale

TABLE 14 CALIBRATION REQUIREMENTS AND STANDARDS FOR X TOLERANCE THREAD GAGES, INDICATING GAGES, PLAIN GAGES, AND MEASURING EQUIPMENT FOR INTERNAL PRODUCT THREADS (CONT'D)

Thread Gages and Measuring Equipment [Note (1)]	Calibration Requirements for Gages and Measuring Equipment [Notes (2), (3)]	Setting Gages and Standards [Note (4)]
4.8 Differential segment or roll	GO profile of one pitch in length, segment or roll, requires flank angles checked GO full-form segment (see 4.1 above) GO full-form roll (see 4.3 above) Minimum-material, pitch diameter type, cone and vee (see 4.5 above) Minimum-material, thread-groove diameter type, cone only [see 4.6(a) and (b) above]	Not required; special internal lead standard
5 Indicating plain diameter gages		
5.1 Major diameter type (55 deg. maximum included angle)	Pitch, included angle of flanks, width of flat on crests	Plain Z tolerance ring gage for basic major diameter or GO major diameter, gage blocks, direct measurement
5.2 Minor diameter type	Straightness, parallelism of contacts [Note (6)]	Plain Z tolerance ring gage for basic minor diameter, gage blocks, direct measurement
6 Internal pitch micrometer with standard contacts (approximately NOT GO profile) cone and vee	Pitch, flank angles. Maximum error in indicated measurement in the micrometer head shall not exceed 0.005 mm.	Solid W thread-setting ring gage for basic pitch diameter, measurement over wires [Note (7)]
7 Internal pitch micrometer with modified contacts (approximately pitch diameter contact) cone and vee	Pitch, flank angles, width of flat at crest, height of thread. Maximum error in indicated measurement in the micrometer head shall not exceed 0.005 mm.	Solid W thread-setting ring gage for basic pitch diameter [Note (7)]
8 Thread-measuring ball with suitable measuring means	Flatness and parallelism of internal anvils, screw calibration, measuring force	Gage blocks, calibrated "best size" thread balls
9 Optical comparator or toolmaker's microscope with suitable fixturing and cast replica	Micrometer stage, magnification, radius chart, protractor head [Note (5)]	Gage blocks, plug gages, sine bar, stage micrometer
10 Profile tracing equipment with suitable fixturing	Use manufacturer's instructions to test stylus traverse and electronic amplification	Special angle block supplied with instrument
13 Plain internal micrometer and calipers modified as required	Maximum error in indicated measurement in the micrometer head shall not exceed 0.005 mm	Gage blocks or calibrated plain plug gages

Copyright ASME International
Provided by IHS under license with ASME
No reproduction or networking permitted without license from IHS

Not for Resale

TABLE 14 CALIBRATION REQUIREMENTS AND STANDARDS FOR X TOLERANCE THREAD GAGES, INDICATING GAGES, PLAIN GAGES, AND MEASURING EQUIPMENT FOR INTERNAL PRODUCT THREADS (CONT'D)

Thread Gages and Measuring Equipment [Note (1)]	Calibration Requirements for Gages and Measuring Equipment [Notes (2), (3)]	Setting Gages and Standards [Note (4)]
14 Surface measuring equipment	Use manufacturer's instructions for calibration procedures	Precision roughness standard
15 Roundness equipment	Use manufacturer's instructions for calibration procedures	Precision glass sphere, roundness magnification standard

NOTES:
(1) See Table 2.
(2) Use applicable X, W, or Z gage tolerance.
(3) Taper, straightness, including bell-mouth barrel shape and hourglass shape, and roundness shall be within the X, W, or Z tolerance depending on the element measured. In other words, if these features are measured at pitch cylinder, the tolerance for pitch diameter applies.
(4) When the gage is set by adjustment based on actual measured pitch diameter of the setting master, the master shall meet all W tolerances except for pitch diameter, which may have a tolerance increased to X.
(5) Use manufacturer's recommended procedures for gage for checking the thread features and alignment of indicating gage components.
(6) New rolls and segments shall be within X tolerance. Worn rolls or segments shall be replaced when a single thread element wears outside of X tolerance.
(7) Pitch diameter is usually transferred from thread-setting gage.
(8) Pitch diameter size on some types of adjustable snap gages may be set from Z tolerance plain ring gages or direct measurement. Rolls must qualify for setting from their outside diameters.
(9) Pitch diameter size may be set by direct measurement over wires on 180 deg. segments, with specially designed transfer standards, or by Z tolerance plain ring gages when rolls are qualified for setting from their outside diameters.

TABLE 15 CALIBRATION REQUIREMENTS FOR THREAD- AND PLAIN-SETTING GAGES

Setting Gage	Calibration Requirements
GO, NOT GO, and W thread-setting plug gage, truncated and full-form	Lead, flank angles, major diameter, pitch diameter, taper, straightness and roundness of major and pitch cylinders, clearance at root, coaxiality of major cylinder with pitch cylinder [Note (1)]
GO, NOT GO, and solid W thread-setting ring gage	Lead, flank angles, minor diameter, pitch diameter [Note (2)], taper, straightness and roundness of minor and pitch cylinders, clearance at root, coaxiality of minor cylinder with pitch cylinder
Plain Z tolerance plug and ring gages	Diameter, taper, straightness, and roundness

NOTES:
(1) W tolerance setting plug gages may be used until a single thread element wears outside X gage tolerance.
(2) Pitch diameter of an internal thread, measured by "best size" thread ball contacts, will be 0.0025 mm to 0.005 mm larger than the pitch diameter, gaged indirectly by a snug-fitting master thread plug gage or locked segments of an indicating gage which have been measured by "best size" thread wire method. This difference is due to the functional size of the master thread plug gage or locked segments which unavoidably have small variations in lead, flank angle, taper, and roundness.

Copyright ASME International
Provided by IHS under license with ASME
No reproduction or networking permitted without license from IHS

Not for Resale

5.23 Helical Path Attachment Used With GO Type Thread Indicating Gage (Table 1 — Gage 12)

5.23.1 Purpose and Use. To observe the presence of helical path variation with a GO type indicating gage (Fig. 36), the following procedure is used.

(*a*) A suitable means is used to axially lock (restrict) the lower gaging element.

(*b*) The top gaging element is allowed to float freely (axially) on its own stud and at least one full pitch away from the frame.

(*c*) The product to be inspected is inserted into the gaging elements so that the conditions described in (a) and (b) above are met.

(*d*) An indicator (usually attached to the comparator) is positioned so that the indicator contact point locates at the face of the free-floating (top) gaging element.

(*e*) The product is turned one full revolution. The presence of helical path variation causes the top gaging element to displace itself axially on its own stud.

(*f*) The full-indicator movement is observed.

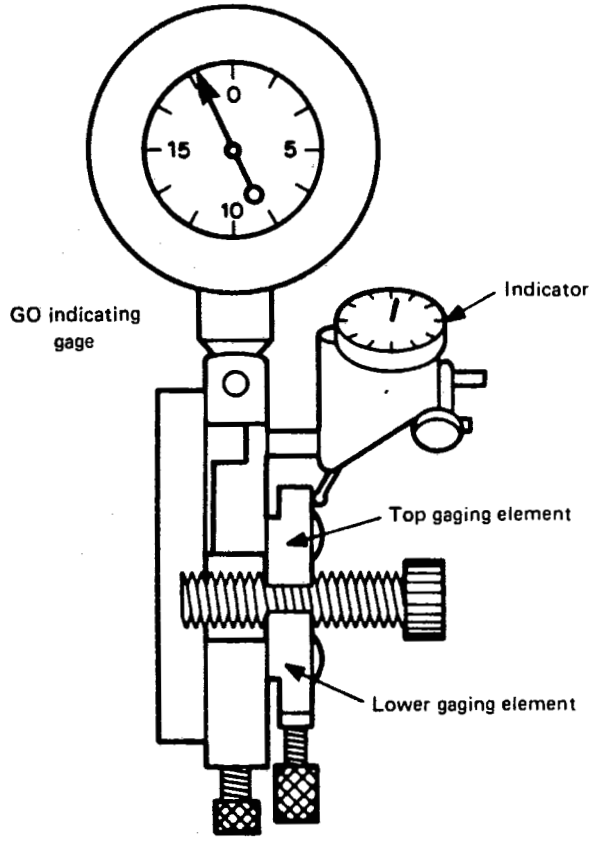

FIG. 36 INDICATING GAGES — HELICAL PATH ATTACHMENT USED WITH GO TYPE INDICATING GAGE (Ref. Table 1 — Column H)

5.24 Helical Path Analyzer (Table 1 — Gage 13)

5.24.1 Purpose and Use. A helical path analyzer is a self-contained unit consisting of a motor-driven headstock, tailstock, electronic gaging head, sine bar, follower, pitch blocks, selsyn transmitter for a chart recorder, and operator control panel.

The external workpiece to be measured is mounted between centers. The motor-driven headstock rotates the part through three revolutions at one setting. At the same time, this rotary motion is transmitted to the chart drive of the recorder. Simultaneously, the driving ribbon running off the headstock actuates the sine bar laterally on a ball slide in direct proportion to the spindle rotation. The sine bar is set previously to the proper angle for the particular pitch using the applicable pitch block. The electronic gage head floats axially on ball slides, the movement being controlled by constant spring pressure of the sine bar follower against the sine bar.

The chart gives readings in lead variation and so-called drunken thread variation. Chart division is equal to 0.0005 mm per division.

5.25 Surface Roughness Equipment (Table 1 — Gage 15)

5.25.1 Purpose and Use. Measurement of surface roughness on screw-thread flanks is usually made with an instrument which traverses a radiused stylus across the lay. The stylus displacement due to the surface irregularities is electronically amplified and the meter reading displays the arithmetical average roughness height in micrometers (see ANSI/ASME B46.1). Some instruments produce a chart of the traced path which shows the peak-to-valley heights of the surface irregularities. Special fixturing is required to position and guide the stylus over the thread surface.

5.26 Roundness Equipment (Table 1 — Gage 16)

5.26.1 Purpose and Use. There are two types of precision roundness-measuring instruments: precision rotary tables and precision spindles. A special stylus coupled to an electric unit records the out-of-roundness on a circular chart as it traces around the cylindrical

Copyright ASME International
Provided by IHS under license with ASME
No reproduction or networking permitted without license from IHS

Not for Resale

surface of the workpiece. The instrument provides a series of magnifications for stylus displacement, a filtering system for isolating lobing from surface irregularities, various means for centering the amplified stylus trace on the polar chart, and a selection of rotating speeds. For details on measuring and other methods for checking roundness, see ANSI/ASME B89.3.1.

5.27 Miscellaneous Gages and Gaging Equipment

The description of the external gages, as noted in paras. 5.1 through 5.26, is definitely not a complete catalog of the various types available for inspection purposes. The gages not described above may be used provided that they adhere to the standard thread practice noted in this Standard (i.e., truncation, form of thread, tolerances, etc.) and have producer and consumer agreement.

Copyright ASME International
Provided by IHS under license with ASME
No reproduction or networking permitted without license from IHS

Not for Resale

APPENDIX A
CALIBRATION AND INSPECTION OF LIMIT GAGES, SNAP GAGES, INDICATING GAGES, AND MEASURING INSTRUMENTS

(This Appendix is not part of ANSI/ASME B1.22M-1985, and is included for information purposes only.)

A1 GENERAL

There are more ways to calibrate gages than those briefly described herein. Since this Appendix covers only the most commonly used designs of limit, snap, and indicating gages, the inspector may have to modify the method described for it to become applicable. Special fixturing may be necessary for the small and large gages.

Specially designed screw-thread indicating gages may at times be more practical for making measurements on thread gage elements than the cumbersome all-purpose laboratory instruments which may lack adequate fixturing to do an efficient job.

Before one calibrates, sets, or uses limit, snap, and indicating gages, they should be cleaned and examined visually for nicks, burrs, and foreign matter, using a minimum of 10X magnification. Defects must be corrected.

A2 THREAD PLUG GAGE CALIBRATION

GO and NOT GO	Thread Plug Gages
GO and NOT GO	Truncated Setting Plug Thread Gages
GO and NOT GO	Full-Form Thread-Setting Plug Gages

A2.1 External Pitch Diameter Measurement

The formula and method of measuring pitch diameter on thread plug gages are described in Appendix B.

A2.2 Pitch Variation Measurement

Only those thread plug gages that have their centers intact can be mounted on centers for evaluation. The measurements are made on a pitch-testing machine by using a hardened steel stylus with a radius matching the "best size" thread ball. The stylus, which contacts both the leading and following flanks, engages selected complete threads at the pitch line in a direction parallel to the axis of the gage.

The measurements are made at both ends of the gage and one or more positions in between along one line; then they are repeated along another line at 180 deg. around the gage. The mean of the two sets of readings is taken in order to eliminate the effect of any misalignment of the measuring axis with respect to the gage axis. The importance of pitch measurement is to estimate its effect on functional size. The diameter equivalent of a pitch variation of 0.001 mm is 0.00175 mm.

Since gages have very small pitch tolerances, the measurement of pitch by optical projection is not recommended.

A2.3 Helix Variation Measurement

Helical variation may be measured with helix measuring machines or on special fixtured indicating gages. Manufacturer's instructions should be used.

A2.4 Major Diameter Measurement

The measuring instrument is set with gage blocks, cylindrical standards, or cylindrical standards and gage block combination which approximate the major diameter size. Then the outside diameter of the thread is placed between parallel anvils of a measuring machine or micrometer. The measuring faces are brought into contact with the threads using the specified measuring force. Additional readings are taken along the axis and around the gage to verify that the variations in roundness and taper are within the major diameter tolerance.

A2.5 Thread Form

Thread form is checked by either optical projection or toolmaker's microscope. After the recommended

Copyright ASME International
Provided by IHS under license with ASME
No reproduction or networking permitted without license from IHS
Not for Resale

TABLE A1 MINIMUM MAGNIFICATION

Pitch, mm	Minimum Magnification
More than 1.75	20X
1.75–0.6	50X
Less than 0.6	100X

magnification is selected, the profile may be compared to thread templates, and the root radius may be compared to a series of radii on a chart. The truncation, width of flat, and root clearance can be measured by using the micrometer screws to translate the image of the thread feature with respect to crosslines in the projector or hairlines in the microscope.

A2.6 Flank Angle Measurement

A2.6.1 If both centers are available, the flank angle may be measured by optical projection or toolmaker's microscope using magnifications shown in Table A1.

The plug gage is mounted on the centers in a fixture which can be tilted to the helix so that both flanks are in focus. See corrective angles shown in Table A2.

The leading and following 30 deg. angles are each measured with respect to the major cylinder or axial to the thread axis. The protractor head should read out to 1 min of arc. The crossline or hairline is set parallel to the thread feature permitting a very narrow slit of light between. If the thread flank is not straight, the inspector may either position the line to average out the flank irregularities or measure both the addendum and dedendum flank angles.

A2.6.2 Profile tracing equipment is available for making profile charts of each flank on 2.5 mm and larger pitches.

A2.7 Runout Between Major Cylinder and Pitch Cylinder

The fixed anvil of the measuring instrument or micrometer engages the major cylinder of the gage, and the movable anvil straddles two thread-measuring wires which are pressed against the pitch cylinder with a force appropriate for pitch diameter measurement. This reading is taken and is followed by a series of readings obtained by rotating the threaded gage until the maximum and minimum values are found. The maximum difference in measurements shall be within the runout tolerance between the major cylinder and pitch cylinder.

A2.8 Minor Diameter Measurement

Minor diameter can be measured with measuring machine or micrometer, provided special 55 deg. maximum conical contacts with radius or small flat tips are used. Gage axis must be mounted normal to the measuring screw axis. A gage block combination corresponding to the basic minor diameter should be used to set the measuring screw. Optical projection may be used also.

A3 THREAD RING GAGE INSPECTION

GO and NOT GO Thread Ring Gages
GO and NOT GO Thread-Setting Ring Gages

A3.1 Internal Pitch Diameter Measurement

A3.1.1 Measurement of internal pitch diameter has seldom been practiced in the United States, because instrumentation has not been readily available. Thus, the pitch cylinder is transferred to split ring gages from the GO and NOT GO thread-setting plugs by adjustment. Solid working and setting ring gages are sized by lapping until a light drag is noticed as they are screwed on the setting plugs. Sizes under 3 mm can be gaged with plug gages only.

A3.1.2 The measured pitch diameter on rings fitted to a setting plug may be 0.0025 mm to 0.005 mm larger than the measured pitch diameter on the plug, because the pitch diameter equivalents from permissible pitch, lead, and flank angle tolerances on matched plug and ring cause some unavoidable discrepancy.

A3.1.3 Measurement of internal pitch diameter using "best size" thread balls is restricted to sizes from 5 mm and larger. It is measured with ball contacts mounted to caliper jaws and coupled to an indicating gage. One jaw has a fixed ball and the other jaw a pair of floating balls with center spacing of two or more pitches. The caliper jaws are usually set to zero on an X tolerance plain ring whose diameter is the sum of the basic pitch diameter of the gage plus one-half the "best size" thread ball diameter. The ball contacts are brought in contact with the flanks of the internal thread. A series of measurements are made around the gage at both ends and in the middle. The indicator reading gives the variation from the size to which the gage was set.

A3.2 Internal Pitch Variation Measurement

The ground face of the thread ring gage is clamped to a face plate and mounted normal to the measuring axis of the pitch-testing machine. A modified stylus with

Copyright ASME International
Provided by IHS under license with ASME
No reproduction or networking permitted without license from IHS
Not for Resale

TABLE A2 60 deg. INCLUDED THREAD ANGLE

Lead Angle [Note (1)]		Correction		Lead Angle [Note (1)]		Correction	
deg.	min	deg.	min	deg.	min	deg.	min
2		0	54	9		18	23
2	10	1	4	9	10	19	4
2	20	1	14	9	20	19	46
2	30	1	24	9	30	20	29
2	40	1	36	9	40	21	12
2	50	1	48	9	50	21	57
3		2	2	10		22	42
3	10	2	16	10	10	23	28
3	20	2	31	10	20	24	15
3	30	2	47	10	30	25	2
3	40	3	4	10	40	25	50
3	50	3	21	10	50	26	38
4		3	38	11		27	28
4	10	3	56	11	10	28	19
4	20	4	16	11	20	29	11
4	30	4	35	11	30	30	2
4	40	4	56	11	40	30	55
4	50	5	18	11	50	31	47
5		5	40	12		32	42
5	10	6	2	12	10	33	37
5	20	6	27	12	20	34	33
5	30	6	31	12	30	35	29
5	40	7	17	12	40	36	27
5	50	7	43	12	50	37	25
6		8	10	13		38	23
6	10	8	37	13	10	39	23
6	20	9	5	13	20	40	25
6	30	9	35	13	30	41	25
6	40	10	5	13	40	42	26
6	50	10	35	13	50	43	30
7		11	6	14		44	33
7	10	11	38	14	10	45	37
7	20	12	11	14	20	46	42
7	30	12	46	14	30	47	47
7	40	13	20	14	40	48	55
7	50	13	55	14	50	50	2
8		14	31	15		51	10
8	10	15	8				
8	20	15	46				
8	30	16	24				
8	40	17	2				
8	50	17	42				

NOTE:
(1) Lead angle is the angle which has a tangent equal to the lead divided by 3.1416 times the pitch diameter.

Copyright ASME International
Provided by IHS under license with ASME
No reproduction or networking permitted without license from IHS
Not for Resale

"best size" thread ball radius is needed to contact the internal threads. Measurements are made along one line parallel to the thread axis at two or more intervals, and then these same intervals are measured on another line after rotating the gage 180 deg. The means of the variations of corresponding intervals are taken to eliminate the effect of misalignment of measuring axis with gage axis.

A3.3 Helix Variation Measurement

Helical variations are measured on a special fixtured indicating gage. Manufacturer's instructions should be used.

A3.4 Helix Offset Measurement on Adjustable Thread Ring Gages

When an adjustable thread ring gage is reset, the helix offset at the split line must be checked and may not exceed the X tolerance for pitch. One way to measure the misalignment is to screw the adjustable ring partially onto its setting plug, which is clamped to a vee block on a surface plate. With the face of the ring gage parallel to the surface plate, allow the spherical probe of an electronic height gage to contact the exposed thread flank near the edge of the slit. Note the reading. Next, slowly rotate the ring so that the probe crosses the slit and rests on the thread flank again and note the reading. The difference in readings shall not exceed X tolerance for lead. Sometimes the offset can be realigned by resetting, gently tapping it into alignment, and relocking the gage.

A3.5 Minor Diameter Measurement

There are varieties of internal gages with plain cylindrical segments coupled to mechanical and electronic indicators which are suitable for the measurement. The indicating gages are set to a master gage made with parallel jaws attached to gage block combinations corresponding to the basic minor diameter. Measurements are made to locate the maximum and minimum diameters to prove that the ring minor diameter is within tolerance.

A3.6 Thread Form

Casts made of nonshrinking and nondeforming material such as dental plaster, selected resins, and silicone are necessary to evaluate thread form. The profiles are examined by optical projection or by toolmaker's microscope. Thread form templates are used for comparison purposes. Also, truncation, width of flat, and root clearance can be measured with the micrometer-driven table.

A3.7 Flank Angle Measurements

Casts are required. They are mounted with plasticine to a fixture which can be tilted in the field of the optical projector or toolmaker's microscope. Further details are given in para. A2.6. Profile tracing equipment is available for making profile charts of each flank angle on 2.5 mm and larger pitch threads. Manufacturer's instructions describe the process.

A3.8 Major Diameter Measurement

Threaded segments with 55 deg. maximum included angles and slightly truncated at the crests are used with an internal indicating gage. The segments are set to a plain ring gage or to the inner sides of parallel jaws attached to a gage block combination equivalent to the basic major diameter of the ring gage. The thread ring gage is explored for maximum and minimum diameter.

A3.9 Runout Between Minor Cylinder and Pitch Cylinder

Horizontally clamp handle end of setting plug in vee block which is clamped on a surface plate. Next, screw the thread ring gage partway onto plug. Lubricate threads if there is a snug fit. Position ball contact of electronic height gage on the exposed minor cylinder of the ring gage. Next, slowly rotate the ring to obtain the full-indicator reading for the runout.

A4 PLAIN PLUG GAGE CALIBRATION

GO and NOT GO	Plain Plug Gages, Z Tolerance
GO and NOT GO	Plain-Setting and Check Plug Gages, X and Y Tolerances

A4.1 Outside Diameter Measurement

A4.1.1 The Z tolerance plug gage is measured between flat parallel contacts of a micrometer which has a resolution of 0.001 mm. The micrometer is set with a tolerance Grade 3 gage block close to the size of the plug to minimize error in micrometer screw. Readings around and along the plug are taken to verify that the gage is within Z tolerance.

A4.1.2 The X and Y tolerance plug gage is measured between flat parallel anvils of a measuring machine which has a resolution to 0.00025 mm or less, with a measuring force of 4.5 N. The flatness and parallelism of the anvils should be within 0.00025 mm. The calibration history of the measuring screw should not exceed 0.00075 mm. The measuring machine anvils are

Copyright ASME International
Provided by IHS under license with ASME
No reproduction or networking permitted without license from IHS
Not for Resale

set with a tolerance Grade 3 gage block combination which corresponds to the marked diameter of the plug gage. Measurements are made around the plug near the ends and middle to determine that ovality, out-of-roundness, barrel shape, and taper are within tolerance. Also, one measured diameter is marked, and this mark is used as the starting position for generating a roundness chart on a roundness-testing instrument for compliance to tolerance. Roundness is assessed by the minimum circumscribed circle method on the chart. The out-of-roundness is the radial separation between the minimum circumscribed circle and the maximum inscribed circle. Refer to ANSI B89.3.1, Measurement of Out-of-Roundness, for details on roundness measurement.

A5 PLAIN RING GAGE CALIBRATION

GO and NOT GO	Plain Ring Gages, Z Tolerance
GO and NOT GO	Plain-Setting Ring Gages, X Tolerance

A5.1 Diameter Measurement

A5.1.1 The Z tolerance ring gage is measured with an internal indicating gage or measuring instrument which has a resolution of 0.001 mm. The measuring device is usually set with a master gap produced by clamping jaws to the selected gage block combination. Measurements are taken around the bore near ends and in the middle.

A5.1.2 The X tolerance ring gage is measured over two radius contacts on an internal measuring instrument. Internal measuring procedure is given in ANSI/ASME B89.1.6M, Measurement of Qualified Plain Internal Diameters for Use as Master Rings and Ring Gages. The measuring device is set with a master gap produced by clamping flat parallel jaws on the gage block combination corresponding to the ring gage dimension. The gage blocks and the jaws which are accessories to gage block sets must meet the requirements specified in ANSI/ASME B89.1.9M-1984, Precision Gage Blocks for Length Measurement (Through 20 in. and 500 mm). The small displacement between ring gage diameter and master gap is read on the meter. Measurements are taken around the gage, near the ends, and in the middle. The measuring instrument should have a readout of at least 0.00025 mm. A referenced position at the middle of the bore is used to index the out-of-roundness check as described in para. A4.1.2.

A6 PLAIN SNAP GAGES

GO and NOT GO plain snap gages for external major diameter check are set with plain Z tolerance plug gages. When the adjustable anvil is locked, there should be a very light drag felt when the plug gage or roll is pushed between anvils for its entire travel. If this does not occur, anvils are worn out of parallel and should be relapped. The snap gage may be set with gage blocks and roll whose combined thickness equals the major diameter limit. When the adjustable anvil is locked, the small roll should have a very light drag when moved across the anvil.

A7 ROLLS WITH ZERO LEAD THREAD FORM USED ON SNAP AND INDICATING GAGES

Rolls may be checked for thread form and size by optical projection (see paras. A2.5 and A2.6). Pitch is measured as described in para. A2.2. New rolls should be manufactured to X tolerances. Worn rolls should be replaced when a single thread element wears outside of X tolerance.

A8 INSPECTING PERIPHERAL CONTACTING SEGMENTS ON INDICATING GAGES

A8.1 Inspection of the Threaded Section Used on External Product Threads

A8.1.1 Straightness (Taper, Bell Mouth, and Barrel Shape)

(*a*) Using the last three threads of the *full-form* portion of the truncated type setting plug (handle end on taperlock blanks), engage the *first* three threads on *one* end of the segments. Note the reading.

(*b*) Using the same procedure, engage the *last* three threads on the *other* end of the segments. Note the reading.

(*c*) Repeat step (a) using the *first* three threads of the *truncated* portion of the plug (opposite the handle end on taperlock blanks). Note the reading.

(*d*) Repeat step (b) using the *first* three threads of the *truncated* portion of the plug. Note the reading.

Indicated differences exceeding X tolerance for pitch diameter between readings (a) and (b) or (c) and (d) reveal the segments as having an end-to-end straightness deviation.

NOTE: More definitive analysis for bell mouth or barrel shape can be made by using a check plug (full-form or truncated) having a maximum length of three pitches, rotating the plug through the full length of the segments, and noting the plus and minus (±) indicator variation at specific points in the segments.

Copyright ASME International
Provided by IHS under license with ASME
No reproduction or networking permitted without license from IHS
Not for Resale

A8.1.2 Flank Angle Wear

(*a*) Indicated differences exceeding X tolerance for pitch diameter values obtained by the para. A8.1.1 procedures (a) and (c) or (b) and (d) reveal that the segments have excessive flank angle wear.

(*b*) Indicated differences exceeding X tolerance for pitch diameter values obtained between the full-form portion and the truncated portion of the setting plug when engaging the segments over their full length also reveal that the segments have excessive flank angle wear.

A8.1.3 Lead Error. Should the preceding checks for straightness and flank angle wear fall within X tolerance, the check for lead error is performed as follows.

(*a*) Using the last three threads of the *full-form* portion of the setting plug (handle end on taperlock blanks), engage the *first* three threads on one end of the segments. Note the reading.

(*b*) With the three-thread engagement above, rotate the *full-form* portion of the plug through the segments to full length engagement. Note the reading.

An indicated difference exceeding X tolerance for pitch diameter between the first and second readings above reveals that the segments have excessive lead error.

(*c*) Repeat steps (a) and (b) with the *truncated* portion of the plug. Note the reading.

An indicated difference exceeding X tolerance for pitch diameter between the first and second readings reveals that the segments have a lead error.

A8.1.4 Thread Form and Cylindrical Form Continuity. For checking continuity of threaded and plain surfaces (helical profile uniformity, continuous thread flank contact with setting plug, and cylindrical contacts), the conventional bluing procedure is used.

A8.1.5 Minor Cylinder to Pitch Cylinder Relationship of Each Segment

(*a*) With each like coded segment, measure from its mounting hole over the outside diameter of a plain plug whose diameter is that of the specified maximum minor diameter and which is resting on the minor diameter of the segment. Note the two readings.

(*b*) With each like coded segment, measure from its mounting hole over the outside diameter of the W tolerance GO thread plug—full-form section—as it rests in the segment thread. Note the readings.

The differences between matching sets of readings from steps (a) and (b) for each segment must be within the X tolerance for minor diameter.

NOTE: Inspection fixtures can be used for the above.

A8.1.6 Minor Cylinder Size Compared to Pitch Cylinder Diameter Size and Minor Diameter Straightness (As a Coded Pair)

(*a*) Using the full-form portion of the W tolerance-setting plug, engage its entire length into the segments and zero-out the indicator.

(*b*) Using a plain cylindrical plug having a size equal to the maximum-material minor diameter of the thread size in question, engage that plug fully into the segments and note the reading.

The difference in reading must be within the X tolerance specified for minor diameter.

(*c*) To verify the taper of the minor diameter, partially engage the plain cylindrical plug from each end of the segments.

(*d*) Measure directly for straightness from the segment mounting hole directly to the minor diameter flats of each thread in the segment.

A8.1.7 Minor Cylinder to Pitch Cylinder Coaxiality Relationship (As a Coded Pair)

NOTE: Even though the size of the minor diameters may be within tolerances, they may not be coaxial.

(*a*) Using the full-form portion of the W tolerance-setting plug, engage the entire length into the segments and zero-out the indicator at the high point. Lock the segments on the studs with the set screws provided in the backs of the segments to prevent them from pivoting. Lift the pivot arm and back out the plug.

NOTE: The pivot arm will not lift high enough to allow total disengagement. Consequently, the plug must be screwed out.

(*b*) Using the plain cylindrical plug having a size equal to the maximum-material minor diameter of the thread size in question, engage the plug by sliding it in (right to left or left to right) from the end. Note the reading.

(*c*) The indicated difference between steps (a) and (b) above should not exceed X tolerance for minor diameter.

(*d*) Loosen and reverse the top segment 180 deg. (ledge side out) and using the full-form portion of the W tolerance-setting plug, engage the entire length into the segments and zero-out the indicator at the high point. With the bottom segment still locked as in step (a), lock the top segment on the stud with the set screw provided in the back of the segment to prevent it from pivoting. Lift the pivot arm and back out the plug.

NOTE: The pivot arm will not lift high enough to allow total disengagement. Consequently, the plug must be screwed out.

(*e*) Repeat step (b) above.

(*f*) The indicated difference between steps (d) and

Copyright ASME International
Provided by IHS under license with ASME
No reproduction or networking permitted without license from IHS
Not for Resale

(e) above should not exceed X tolerance for minor diameter.

A8.2 Inspection of Threaded Contact Segments Used on Internal Product Thread

The coded pairs of segments are locked or clamped when engaging the plain ring gage or thread-setting ring. Then thread form, pitch diameter, major diameter, pitch, and straightness can be inspected by methods described in paras. A2.1 through A2.8.

A9 CHECK FOR MAGNIFICATION DISCREPANCIES DUE TO INDICATING SYSTEM LINKAGE

Two X tolerance plain plug gages for the external thread indicating gages and two X tolerance plain ring gages for the internal thread indicator gages, whose diameter difference corresponds with the working range of the indicator dial, are required. When they are applied to the cluster of rolls or segments, the difference in indicator dial readings should not vary by more than ± 1 least graduation from the calibrated difference between the two gages.

A10 CALIBRATION OF DIAL AND ELECTRONIC INDICATORS

Calibration of the indicator may be done by displacing the spindle with a calibrated micrometer screw or with tolerance Grade 3 gage blocks inserted between a fixed anvil and the spindle. The accuracy of the micrometer screw should be 0.0007 mm and is used for calibrating indicators with resolution of 0.002 mm and larger. The zero setting for calibrating dial indicators is at the 12 o'clock position. A minimum of four equally spaced increments per revolution is calibrated. On electronic indicators each numbered division is calibrated.

A11 ASSESSMENT OF SURFACE QUALITY

Product threads which exhibit torn or rough surface may be assessed with indicating gages. The rapid fluctuation of the indicating needle when the part is rotated slowly between the gage contacts may not exceed 0.0025 mm. For external threads, a roll type indicating gage with "best size" thread radius rolls is used.

For internal threads, a gage with "best size" thread ball contacts is used.

Copyright ASME International
Provided by IHS under license with ASME
No reproduction or networking permitted without license from IHS

Not for Resale

APPENDIX B
METROLOGY OF 60 deg. SCREW THREADS

(This Appendix is not part of ANSI/ASME B1.22M-1985, and is included for information purposes only.)

B1 WIRE METHOD OF MEASUREMENT OF PITCH DIAMETER (THREAD-GROOVE DIAMETER)

This Section presents specifications and techniques for the measurement of screw-thread plug gages and setting plugs by measuring over accurate cylinders or wires inserted in the thread grooves. The purpose is to make available a standard United States method for making such measurements. The practices described measure groove diameter, which is equal to pitch diameter only on a thread with perfect pitch spacing.

B2 SIZE OF WIRES

In the three-wire method of measuring pitch diameter, hardened steel cylinders or wires of appropriate size are placed in the thread groove, two on one side of the screw and one on the opposite side, as shown in Fig. B1. The contact face of the comparator, measuring machine, or micrometer anvil or spindle which is over the two wires must be sufficiently large in diameter or width to touch both wires; that is, it must be greater than the pitch of the thread. It is best to select wires of such a size that they touch the sides of the thread at points where the groove is equal to $0.5P$ (groove diameter). This is done so that the measurement of pitch diameter is least affected by any error in thread angle. The size of wire that touches exactly at the groove diameter of a perfect thread of a given pitch is termed the "best size" thread wire for that pitch.

The depth at which a wire of given diameter will rest in a thread groove depends primarily on the pitch and included angle of the thread; secondarily, it depends on the angle made by the helix at the point of contact of the wire and the thread, with a plane perpendicular to the axis of the screw. Variation in the lead angle has a very small effect in the measurement of groove diameter with wires. It is desirable to use one size of wire to measure all threads of a given pitch and included angle. The "best size" thread wire is taken as that size which will touch at the groove diameter of a groove cut around a cylinder perpendicular to the axis of the cylinder. The size of the "best size" thread wire, resting in a zero lead angle 60 deg. vee thread, is given by the formula:

$$w = 0.5P \times \sec \alpha \qquad (1)$$

where

w = diameter of wire
P = pitch
α = half-angle of thread

Reduce this formula to

$$w = 0.57735P \qquad (2)$$

for 60 deg. threads.

On occasion it may be necessary, when a "best size" thread wire is not available, to measure pitch diameter by means of wires other than the "best size." The minimum size which may be used is limited to that permitting the wire to project above the crest of the thread, and the maximum to that permitting the wire to rest on the flanks of the thread just below the crest and not ride on the crest of the thread. The diameters of the "best size," maximum, and minimum wires for 60 deg. threads are given in Table B1.

B3 METHODS OF MEASURING WIRES CONSIDERING THE EFFECT OF DEFORMATION

Measurement of the pitch diameter of a thread gage by means of the three-wire method is most conveniently made when sufficient force is applied to the wires by the measuring instrument to properly align the wires and gage. Since a wire touches a minute area on each thread flank, the deformation of the wire and thread will be sufficiently large to require some type of correction and the measuring force must be limited to avoid permanent deformation of the wire and gage. As an indication of

Copyright ASME International
Provided by IHS under license with ASME
No reproduction or networking permitted without license from IHS
Not for Resale

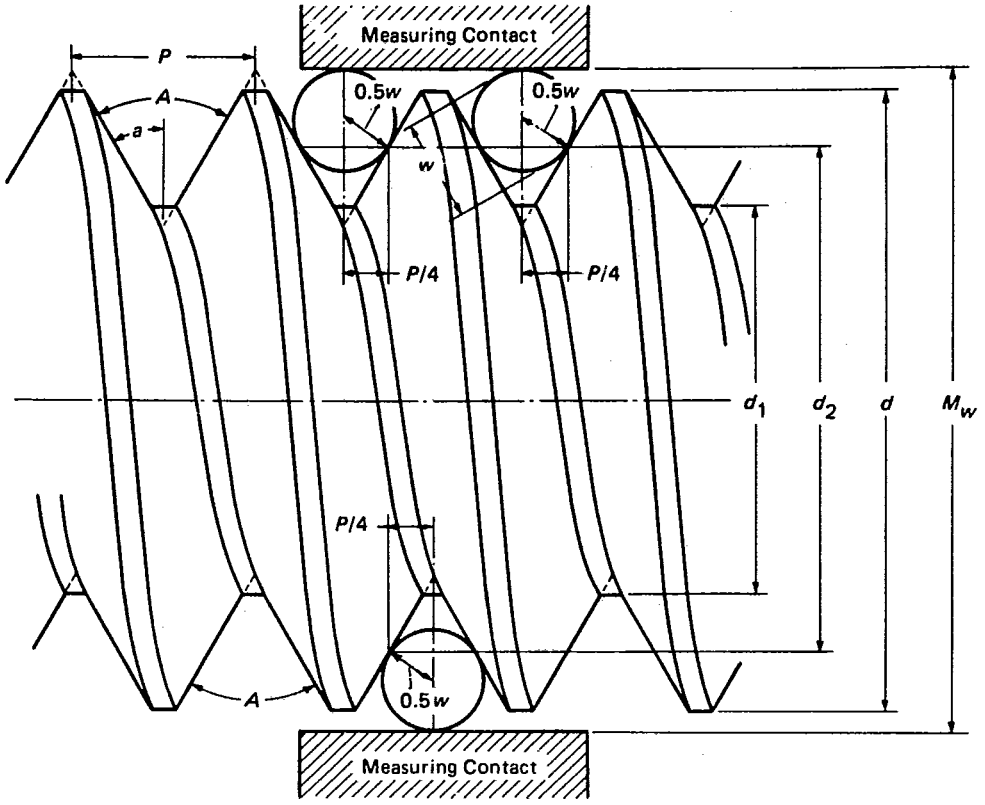

FIG. B1 A THREE-WIRE METHOD OF MEASURING PITCH (THREAD-GROOVE) DIAMETER OF THREAD PLUG GAGES

the need for compensation for the deformations, it can be shown that the total effect on pitch diameter of the deformations of three wires and an MJ12 × 1.25 thread gage is 0.005 mm when measured under 11.1 N. It is practical to compensate for the major portion of this deformation by a simple procedure described in the following paragraphs.

(*a*) It would be possible to prepare tables of the deformation of all standardized sizes of gages, but this would not take care of special combinations of pitch and diameter. Another method of compensating for the deformations is to measure the thread wires under conditions that provide deformations equivalent to those that occur when the wires are used to measure a thread. This can be accomplished by the measurement of the thread wires between a flat anvil and a cylinder with the axes of cylinder and wire at 90 deg. to each other if an appropriate selection of cylinder diameter and the measuring force is made. Optimum compensation for the deformations that occur in the measurement of pitch diameter would require the calibration of wires with a different cylinder or force for every thread diameter–pitch combination. Calibration of wires involving such a variety of conditions is neither practical nor necessary, as the measurement procedure which is generally followed will assure uniformity of values. It is desirable to keep the effects of deformation small.

(*b*) It can be shown, for example, that all sizes of threads from 3.5 mm to 50 mm can be measured with wires calibrated against a 20 mm diameter cylinder using the forces recommended for pitch diameter measurements in Table B2 with variations from true pitch diameter (neglecting the effect of lead angle) not in excess of 0.0009 mm. Slightly larger discrepancies in the 50 mm to 100 mm size range are relatively unimportant because these sizes have larger tolerances. For sizes smaller than 3.5 mm it is necessary to calibrate wires against a 3 mm cylinder which has a radius more nearly equal to the radius of curvature of the thread flank.

(*c*) As previously noted, the force applied by the measuring device must be limited to avoid permanent deformation of the wires or gage or both. Even for large-

Copyright ASME International
Provided by IHS under license with ASME
No reproduction or networking permitted without license from IHS
Not for Resale

TABLE B1 METRIC THREAD-MEASURING WIRES FOR 60 deg. SCREW THREADS

Pitch, mm	Wire Sizes W, mm: Best $0.577350P$ [Note (1)]	Minimum $0.505182P$ [Note (2)]	Maximum $1.010363P$ [Note (2)]	"Best Size" Thread Wire Constant C, mm $0.866025P$ [Note (3)]
0.2	0.1155	0.1010	0.2021	0.1732
0.25	0.1443	0.1263	0.2526	0.2165
0.3	0.1732	0.1516	0.3031	0.2598
0.35	0.2021	0.1768	0.3536	0.3031
0.4	0.2309	0.2021	0.4041	0.3464
0.45	0.2598	0.2273	0.4547	0.3897
0.5	0.2887	0.2526	0.5052	0.4330
0.6	0.3464	0.3031	0.6062	0.5196
0.7	0.4041	0.3536	0.7073	0.6062
0.75	0.4330	0.3789	0.7578	0.6495
0.8	0.4619	0.4041	0.8083	0.6928
1	0.5774	0.5052	1.0104	0.8660
1.25	0.7217	0.6315	1.2630	1.0825
1.5	0.8660	0.7578	1.5155	1.2990
1.75	1.0104	0.8841	1.7681	1.5155
2	1.1547	1.0104	2.0208	1.7321
2.5	1.4434	1.2630	2.5259	2.1651
3	1.7321	1.5155	3.0311	2.5981
3.5	2.0207	1.7681	3.5363	3.0311
4	2.3094	2.0207	4.0415	3.4641
4.5	2.5981	2.2733	4.5466	3.8971
5	2.8868	2.5259	5.0518	4.3301
5.5	3.1754	2.7785	5.5570	4.7631
6	3.4641	3.0311	6.0622	5.1962

NOTES:
(1) The diameters of "best size" thread balls are the same as the diameters of "best size" thread wires.
(2) Measured PD = $M_w + 0.866025P - 3W$.
(3) If "best size" thread wire is used, PD = $M_w - C$.

TABLE B2 MEASURING FORCE FOR OVER-WIRE MEASUREMENTS OF EXTERNAL PITCH DIAMETER AND WIRE CALIBRATION, AND CYLINDRICAL DIAMETER FOR WIRE CALIBRATION

Pitch Range, mm	Measuring Force (±10%): N [Note (1)]	lb (Ref.)	Cylinder Diameter, mm
0.2–0.35	1.1	0.25	1.25
0.35–0.6	2.2	0.50	3
0.6–1.25	4.5	1.00	20
1.25 and larger	11.1	2.50	20

NOTE:
(1) 1 N = 0.2248 lbf

Copyright ASME International
Provided by IHS under license with ASME
No reproduction or networking permitted without license from IHS
Not for Resale

diameter threads having coarse pitches, the maximum compressive stress at the points where a wire touches the thread flanks is high, and it increases to a point where permanent deformation may occur for the small-diameter threads. It therefore becomes necessary to reduce the measuring force progressively as the sizes of threads decrease (see Table B2).

B4 METHODS OF MEASUREMENT USING WIRES

The computed value for the pitch diameter of a screw-thread gage obtained from readings over wires will depend upon the accuracy of the measuring instrument used, the measuring force, and the value of the diameter of the wires used in the computations. In order to measure the pitch diameter of a screw-thread gage to an accuracy of 0.0025 mm, strict adherence to the methods specified is required.

(*a*) The "best size" thread wires shall comply with the specifications listed in para. B2. The diameter of the wires must be known to within 0.0005 mm.

(*b*) The measurement over wires should be made with a measuring instrument which reads directly to 0.00025 mm and has flat parallel contacts within 0.0001 mm.

(*c*) A wire presses on the flanks of a 60 deg. thread with the force that is applied to the wire by the measuring instrument. Inasmuch as the wire and thread deform at the contact areas, it is desirable to determine the size of the wire under conditions that will compensate for this deformation. It is recommended for standard practice that diameters of wires be measured between a flat contact and a hardened and accurately ground and lapped steel cylinder having a diameter in accordance with Table B1 with the measuring force specified in Table B2. The plane of the flat contact should be parallel to the contact element of the cylinder within 0.0001 mm.

To avoid a permanent deformation of the material of the wire or gages, it is necessary to limit the contact force and, for consistent results, a uniform practice as to contact force in making wire measurements of hardened screw-thread gages is necessary. The recommended force for external pitch diameter measurements is given in Table B2.

The use of other contact forces will cause a difference in the reading over the wires, and to completely compensate for such errors is impractical. Variations in diameter around the wire should be determined by rotating the wire between a spherical or flat measuring contact and an anvil having the form of a 60 deg. vee groove. Variations in diameter along the wire should be determined by measuring between a spherical or flat contact and a cylindrical anvil.

(*d*) The wires should be free to assume their positions in the thread grooves without restraint. (The practice of holding wires in position with elastic bands can introduce errors in measurement.)

(*e*) To assure accurate values for pitch diameter measurement, the measured value should be given to three decimal places.

(*f*) Measurements shall be standard at 20°C.

B5 STANDARD SPECIFICATION FOR WIRES AND STANDARD PRACTICE IN MEASUREMENT OF WIRES OF 60 deg. THREADS

The following specifications represent present practice relative to thread-measuring wires.

(*a*) *Composition.* The wires shall be accurately finished steel cylinders, the hardness of which shall not be less than that corresponding to a Knoop indentation number of 776 minimum. The surface texture shall not exceed the equivalent of 0.05 μm R_a max.

(*b*) *Length of Wires.* The working surface shall be at least 25 mm in length. The wire may be provided with a suitable means of suspension.

(*c*) *Diameter of Wires.* One set of wires shall consist of three wires which shall have the same diameter within 0.00025 mm, and this common diameter shall be within 0.0005 mm of that corresponding to the "best size" for the pitch for which the wires are to be used. Wires shall be measured between a flat contact and a hardened and accurately finished cylinder having a surface texture not over 0.05 μm R_a max. The measuring forces and cylinder diameters shall be per Table B2.

(*d*) *Variation in Diameter.* Variations in diameter along a wire (taper) over the 25 mm interval at the center of its length shall not exceed 0.00025 mm as determined by measuring between a spherical or flat contact and a cylindrical contact.

Variations from true cylindrical contour of a wire (out-of-roundness or noncircular cross section) over its 25 mm central interval shall not exceed 0.00025 mm as determined by measuring between a spherical or flat measuring contact and a well-finished 60 deg. vee groove.

For approximately 0.35 mm pitch and smaller wire, the spherical contact is attached to the tip of a 55 deg. or less cone, or the flat contact is formed by truncating a 55 deg. or less cone point to a width of approximately 0.2540 mm.

(*e*) *Container and Marking.* A suitable container shall be provided for each set of wires. The pitch for which the wires are the "best size" and the diameter of

Copyright ASME International
Provided by IHS under license with ASME
No reproduction or networking permitted without license from IHS
Not for Resale

the 25 mm central interval of the wires, as determined by measurements under standard conditions as specified, shall be marked on the container. The measuring force and C corrections shall be marked in the container.

B6 GENERAL FORMULA FOR MEASUREMENT OF PITCH DIAMETER

The general formula for determining the pitch diameter of any thread whose sides are symmetrical with respect to a line drawn through the vertex and perpendicular to the axis of the thread in which the slight effect of lead angle is taken into account is:

$$d_2 = M_w + \left(\frac{\cot \alpha}{2}\right)(P) - W[1 + (\operatorname{cosec}^2 \alpha + \cot^2 \alpha \tan^2 \lambda')^{1/2}] \quad (3)$$

where

d_2 = pitch diameter
M_w = measurement over wires
α = half-angle of thread
P = pitch
$\tan \lambda' = \dfrac{\text{lead}}{3.1416 d_2}$ = angle between axis of wire and plane perpendicular to axis of thread
W = mean diameter of wires

This formula is a very close approximation, being based on certain assumptions regarding the positions of the points of contact between the wire and the thread.

Formula (3) can be converted to the following simplified form, which is particularly useful when measuring threads of large lead angle:

$$d_2 = M_w + \left(\frac{\cot \alpha}{2}\right)(P) - W(1 + \operatorname{cosec} \alpha') \quad (4)$$

in which α' = the angle whose tangent equals $\tan \alpha \cos \lambda'$.

When formula (3) is used, the usual practice is to expand the square root term as a series, retaining only the first and second terms, which gives the following:

$$d_2 = M_w + \left(\frac{\cot \alpha}{2}\right)(P) - W\left(1 + \operatorname{cosec} \alpha + \frac{\tan^2 \lambda' \cos \alpha \cot \alpha}{2}\right) \quad (5)$$

B7 SIMPLIFIED FORMULA FOR PITCH DIAMETER

In the measurement of pitch diameter, the term

$$\left(\frac{W \tan^2 \lambda' \cos \alpha \cot \alpha}{2}\right)$$

is neglected, as its value is small, being in all cases less than 0.0038 mm for standard single-lead fastening screws of MJ2 and larger when the "best size" thread wire is used. Formula (5) takes the simplified form:

$$d_2 = M_w + \left(\frac{\cot \alpha}{2}\right)(P) - W(1 + \operatorname{cosec} \alpha) \quad (6)$$

The practice of using formula (6) for such threads is permissible in order to maintain uniformity of practice in the United States and thus avoid confusion.

For a 60 deg. thread of correct angle and thread form, formula (6) simplifies to

$$d_2 = M_w + 0.866025P - 3W \quad (7)$$

For a given set of "best size" thread wires

$$d_2 = M_w - C$$

where

$$C = W\left[1 + \operatorname{cosec} \alpha - \left(\frac{\cot \alpha}{2}\right)(P)\right]$$

The quantity C is a constant for a given thread angle and, when the wires are used for measuring threads of the pitch and angle for which they are the "best size," the pitch diameter is obtained by the simple operation of subtracting this constant from the measurement taken over the wires. In fact, when "best size" thread wires are used, this constant is changed very little by a moderate variation or error in the angle of the thread. Consequently, the constants for the various sets of wires in use may be tabulated, thus saving a considerable amount of time in the inspection of gages. However, when wires of other than the "best size" are used, this constant changes appreciably with a variation in the angle of the thread.

With the exception of large pitch screws, it has been shown that variation in angle from the basic size causes no appreciable change in the quantity C for the "best size" thread wires. (For angle variation of 2 deg., C increases by 0.001 mm for a pitch of 1.5 mm and 0.002 mm for a pitch of 3 mm.) On the other hand, when a wire near the maximum or minimum allowable size is used, a considerable change occurs, and the values of

Copyright ASME International
Provided by IHS under license with ASME
No reproduction or networking permitted without license from IHS
Not for Resale

TABLE B3 MEASURING FORCE OVER BALLS FOR INTERNAL PITCH DIAMETER MEASUREMENT AND BALL CALIBRATION

Pitch Range, mm	Measuring Force (± 10%) N [Note (1)]	lb (Ref.)
0.35–0.6	0.6	0.125
0.6–1.25	1.1	0.250
1.25–3	1.7	0.375
3 and larger	2.2	0.500

NOTE:
(1) 1 N = 0.2248 lbf

the cotangent and cosecant of the actual measured half-angle are to be used. It is apparent, therefore, that there is a great advantage in using wires very closely approximating the "best size." For convenience in carrying out computations, the value C for pitches as shown in Table B1 should be used.

B8 SETTING MEASURING INSTRUMENTS WITH VARIABLE MEASURING FORCE

Recommended practice for setting measuring instruments using gage blocks is as follows.

(*a*) Wipe anvils and gage blocks free from dirt and dust.

(*b*) Wring the gage blocks to both anvils at maximum measuring force setting, or press with fingers the tailstock spindle against the gage blocks while wringing them to the anvils.

(*c*) With the gage blocks still in the instrument, reduce the measuring force to that which will be used and reset the instrument at this working measuring force. This procedure provides adequate force for wringing gage blocks in with relatively large areas of anvil faces. The final setting at the working measuring force to be used compensates for any instrument deflection variation that may occur at the higher measuring forces.

B9 THREAD BALLS

B9.1 "Best Size" Thread Balls Specifications

Thread balls shall meet the following requirements:

(*a*) for a 60 deg. thread, the "best size" thread ball sizes are identical to the "best size" thread wire sizes and are given in Table B1;

(*b*) one set of "best size" thread balls consists of three hardened steel balls that have the same diameter within 0.00025 mm, and their common diameter should be within 0.0005 mm of the corresponding "best size" thread ball for the specified pitch. The variation from a true sphere should not exceed 0.00025 mm.

B9.2 Method of Measuring Thread Balls

The following procedures shall be used when measuring thread balls.

(*a*) In order to measure the pitch diameter of a 60 deg. thread ring gage to an accuracy of within 0.0025 mm by means of thread balls, it is necessary to know the thread ball diameters to within 0.0005 mm. Thus, it is necessary to use a measuring instrument that reads accurately to 0.0003 mm.

(*b*) The thread ball presses on the flanks of a 60 deg. thread with the force that is applied to the thread ball by the measuring instrument. Since the thread ball and thread deform at the contact areas, the size of the thread ball should be determined under conditions that nearly compensate for this deformation. The thread ball should be measured between parallel, flat, hardened steel contacts that are set with calibrated gage blocks. The contact should be parallel within 0.0001 mm.

(*c*) To avoid exceeding the elastic limit of the thread balls and thread gages and to prevent excessive deformation compensation, it is necessary to recommend a uniform practice for measuring force for the calibration of thread balls and for their use in measuring internal pitch diameter. Table B3 gives the recommended measuring forces.

(*d*) Variations in diameter around the thread ball should be determined by rotating the thread ball between parallel measuring contacts.

B10 INTERNAL PITCH DIAMETER MEASUREMENT

Indicating gages with "best size" thread ball contacts are set to either a calibrated plain ring gage or a gage block gap which is larger than the basic pitch diameter of the product thread by one-half of the diameter of the "best size" thread ball. The measured internal pitch diameter is obtained by adding the indicator reading change directly to the basic pitch diameter size. Setting to a plain ring gage permits less uncertainty in deformation compensation. The recommended measuring force over thread balls for internal pitch diameter measurement is given in Table B3.

Copyright ASME International
Provided by IHS under license with ASME
No reproduction or networking permitted without license from IHS
Not for Resale

APPENDIX C
METRIC TABLES FOR GAGE LENGTHS

(This Appendix is not part of ANSI/ASME B1.22M-1985, and is included for information purposes only.)

TABLE C1 METRIC LENGTHS OF AGD THREAD RING GAGE BLANKS AND TOTAL THREAD LENGTHS OF STANDARD TRUNCATED SETTING PLUG GAGE BLANKS (SI) SELECTED FROM ANSI/ASME B47.1aM

Thread Sizes		Lengths of Thread Ring Gages			Total Thread Lengths of Truncated Thread-Setting Plugs		
Above	To and Including	Thin Ring	Thick Ring	Fine Pitch Instrument Ring	For Thin Ring	For Thick Ring	For Fine Pitch Instrument Ring
1	2	3	4	5	6	7	8
mm	mm	mm	mm	mm	mm	mm	mm
1.50	2.29	2.4	...	...	5.6	...	...
2.29	3.81	4.0	...	...	9.5	...	...
3.81	5.84	4.8	...	...	10.3	...	...
5.84	9.27	8.7	...	6.4	19.0	...	14.3
9.27	12.95	11.1	...	7.9	25.4	...	17.5
12.95	20.96	14.3	19.0	11.9	31.8	47.6	25.4
20.96	28.83	17.5	23.8	13.5	38.1	54.0	28.6
28.83	38.35	19.0	28.6	15.9	41.3	60.3	33.3
38.35	51.05	20.6	31.8	15.9	47.6	73.0	33.3
51.05	63.75	22.2	33.3	17.5	50.8	76.2	36.5
63.75	76.45	22.2	34.9	...	50.8	79.4	...
76.45	89.15	23.8	36.5	...	50.8	79.4	...
89.15	101.85	23.8	38.1	...	54.0	82.6	...
101.85	159.00	25.4	38.1	...	54.0	82.6	...

GENERAL NOTES:
(a) Thin gage blanks are used for all NOT GO thread ring gages, recessing sides as applicable.
(b) For GO thread ring gages:
  (1) 0.0 mm to 5.84 mm, use thin blanks for all pitches, recessing sides as applicable;
  (2) above 5.84 mm to 12.95 mm, use thin blanks for pitches 0.75 mm and larger, and fine pitch instrument blanks for pitches finer than 0.75 mm;
  (3) above 12.95 mm to 28.83 mm, use thick blanks for pitches larger than 2 mm, thin blanks for pitches 1 mm to 2 mm, and fine pitch instrument blanks for pitches finer than 1 mm;
  (4) above 28.83 mm to 152.65 mm, use thick blanks for pitches larger than 2.5 mm, thin blanks for pitches 1 mm to 2 mm, and fine pitch instrument blanks for pitches finer than 1 mm;
  (5) above 152.65 mm, use thick blanks for all pitches.

Copyright ASME International
Provided by IHS under license with ASME
No reproduction or networking permitted without license from IHS
Not for Resale

TABLE C2 METRIC LENGTHS OF TAPERLOCK AND TRILOCK THREAD PLUG GAGE BLANKS (SI) SELECTED FROM ANSI/ASME B47.1aM

Thread Sizes		Thread Lengths					
Range		Thread Plug Gages				Fine Pitch Instrument Thread Plug Gages	
Above	To and Including	GO			NOT GO	GO	NOT GO
1	2	3			4	5	6
mm	mm	mm			mm	mm	mm
1.50	2.67	6.4			4.8	4.8	3.2
2.67	3.81	7.9			5.6	5.6	4.0
3.81	5.84	10.3			7.1	7.1	5.6
5.84	9.27	12.7			7.9	7.9	6.4
9.27	12.95	19.0			9.5	9.5	7.9
12.95	20.96	22.2			12.7	12.7	9.5
20.96	28.83	25.4			15.9	15.9	11.1
		Pitches 2.0 and smaller	Pitches larger than 2.0				
28.83	38.35	25.4	31.8		19.0	19.0	12.7
		Pitches 3.5 and larger	Pitches between 3.5 and 1.5	Pitches 1.5 and smaller			
38.35	51.05	47.6	31.8	22.2	22.2	19.0	15.9
51.05	63.75	50.8	34.9	22.2	22.2	19.0	15.9
63.75	76.45	50.8	38.1	25.4	25.4	...	...
76.45	89.15	50.8	38.1	25.4	25.4	...	...
89.15	203.45	54.0	38.1	25.4	25.4	...	...
203.45	305.05	57.2	38.1	25.4	25.4	...	...

GENERAL NOTE:
For trilock plug blanks above 19.3 mm and including 38.35 mm, and wire type plug blanks in sizes below 25.65 mm, see ANSI/ASME B47.1aM.

Copyright ASME International
Provided by IHS under license with ASME
No reproduction or networking permitted without license from IHS
Not for Resale

APPENDIX D
CUSTOMARY EQUIVALENTS

(This Appendix is not part of ANSI/ASME B1.22M-1985, and is included for information purposes only.)

This Appendix presents the customary equivalents of the metric tables in this Standard, as follows. Data appearing here are for reference only.

Metric Table	*Description*	*Inch Table*
4	Thread Data	D1
9	X Gage Tolerances	D2
10	W Gage Tolerances	D3
11	Gage Tolerances for Cylindrical Gages	D4
C2	Lengths of Taperlock and Trilock Plug Gage Blanks	D5
C1	Lengths of Thread Ring Gage Blanks and Truncated Setting Plug Gage Blanks	D6
6	Setting Gages for Standard Series Metric MJ Screw Threads — Limits of Size	D7
5	Gages for Standard Thread Series Metric MJ Screw Threads — Limits of Size	D8
B1	Metric Thread-Measuring Wires	D9

Copyright ASME International
Provided by IHS under license with ASME
No reproduction or networking permitted without license from IHS
Not for Resale

TABLE D1 THREAD DATA, MJ THREAD GAGES (CUSTOMARY)

Pitch P	Space Width of Pitch Cylinder $0.5P$	Maximum Dedendum $h_d = 7/24\ H$ $0.25259P$	Two Times Maximum Dedendum $2h_d = 7/12H$ $0.50518P$	Root Radius r_{rs} $0.18042P$	Root Radius Tolerance (Plus) t	Tolerance Factor T	Tangency Width $0.3125P$	Tangency Depth $0.1875H$ $0.16238P$	Twice Tangency Depth $0.375H$ $0.32476P$
1	2	3	4	5	6	7	8	9	10
mm	in.	in.	in.	in.	in.	in.	in.	in.	in.
0.2	0.003937	0.001988	0.003976	0.001421	0.000142	0.000283	0.002461	0.001280	0.002559
0.25	.004921	.002484	.004972	.001776	.000177	.000354	.003075	.001598	.003197
0.3	.005906	.002984	.005969	.002130	.000213	.000425	.003693	.001917	.003835
0.35	.006890	.003480	.006961	.002484	.000248	.000496	.004307	.002236	.004476
0.4	.007874	.003976	.007957	.002843	.000283	.000567	.004921	.002559	.005114
0.45	.008858	.004476	.008949	.003197	.000319	.000638	.005535	.002878	.005752
0.5	.009843	.004972	.009945	.003551	.000354	.000709	.006150	.003197	.006394
0.6	.011811	.005969	.011933	.004260	.000425	.000850	.007382	.003835	.007673
0.7	.013780	.006961	.013921	.004972	.000496	.000992	.008614	.004476	.008949
0.75	.014764	.007457	.014917	.005327	.000531	.001063	.009228	.004795	.009591
0.8	.015748	.007957	.015909	.005681	.000567	.001134	.009843	.005114	.010228
1	.019685	.009945	.019890	.007102	.000709	.001417	.012303	.006394	.012787
1.25	.024606	.012429	.024862	.008890	.000890	.001780	.015378	.007992	.015984
1.5	.029528	.014917	.029835	.010654	.000984	.001969	.018457	.009591	.019177
1.75	.034449	.017402	.034807	.012429	.000984	.001969	.021531	.011150	.022374
2	.039370	.019890	.039780	.014205	.000984	.001969	.024606	.012787	.025571
2.5	.049213	.024862	.049724	.017756	.000984	.001969	.030756	.015984	.031965
3	.059055	.029835	.059665	.021311	.000984	.001969	.036909	.019177	.038358
3.5	.068898	.034807	.069610	.024862	.001244	.002488	.043063	.022374	.044752
4	.078740	.039780	.079555	.028413	.001421	.002843	.049213	.025571	.051142
4.5	.088583	.044752	.089500	.031965	.001598	.003197	.055366	.028768	.057535
5	.098425	.049724	.099445	.035516	.001776	.003551	.061516	.031965	.063929
5.5	.108268	.054693	.109390	.039067	.001953	.003906	.067669	.035161	.070323
6	.118110	.059665	.119335	.042618	.002130	.004260	.073819	.038358	.076717
8	.157480	.079555	.159110	.056827	.002843	.005681	.098425	.051142	.102287

GENERAL NOTE: See Fig. 4.

Copyright ASME International
Provided by IHS under license with ASME
No reproduction or networking permitted without license from IHS
Not for Resale

TABLE D2 X GAGE TOLERANCES FOR THREAD GAGES (CUSTOMARY)

Pitch, mm	Tolerance on Lead, in. [Notes (1), (2)]	Tolerance on Half-Angle of Thread, deg. ± min	Tolerance on Major or Minor Diameters [Note (3)]		Tolerance on Pitch Diameter [Notes (3), (4)]			
			To and Including 100 mm	Above 100 mm	To and Including 39 mm	Above 39 mm to 100 mm	Above 100 mm to 200 mm	Above 200 mm to 300 mm
1	2	3	4	5	6	7	8	9
0.2	0.00020	0 40	0.00031	...	0.00020	...	...	...
0.25	.00020	0 40	.00031	...	.00020	...	...	...
0.3	.00020	0 30	.00031	...	.00020	...	...	...
0.35	.00020	0 30	.00031	...	.00020	...	...	...
0.4	.00020	0 30	.00039	...	.00020	...	...	...
0.45	.00020	0 30	.00039	...	.00020	0.00031	...	...
0.5	.00020	0 30	.00039	...	.00020	.00031	...	...
0.55	.00020	0 30	.00039	...	.00020	.00031	...	...
0.6	.00020	0 20	.00039	...	.00020	.00031	...	...
0.65	.00020	0 20	.00039	...	.00020	.00031	...	...
0.7	.00020	0 20	.00039	...	.00020	.00031	...	...
0.75	.00020	0 20	.00039	...	.00020	.00031	...	...
0.8	.00031	0 15	.00051	0.00071	.00031	.00039	0.00051	0.00051
1	.00031	0 15	.00051	.00071	.00031	.00039	.00051	.00051
1.25	.00031	0 15	.00051	.00071	.00031	.00039	.00051	.00051
1.5	.00031	0 10	.00051	.00091	.00031	.00039	.00059	.00071
1.75	.00031	0 10	.00051	.00091	.00031	.00039	.00059	.00071
2	.00031	0 10	.00051	.00091	.00031	.00039	.00059	.00071
2.5	.00031	0 10	.00051	.00091	.00039	.00039	.00059	.00071
3	.00031	0 10	.00071	.00110	.00039	.00051	.00059	.00071
3.5	.00039	0 5	.00071	.00110	.00039	.00051	.00059	.00071
4	.00039	0 5	.00071	.00130	.00039	.00051	.00059	.00071
4.5	.00039	0 5	.00079	.00130	.00039	.00051	.00059	.00079
5	.00039	0 5	.00079	.00130	.00039	.00051	.00059	.00079
5.5	.00039	0 5	.00079	.00130	.00039	.00051	.00059	.00079
6	.00039	0 5	.00091	.00150	.00039	.00051	.00059	.00079
8	.00039	0 5	.00091	.00150	.00039	.00051	.00059	.00079

GENERAL NOTE: Equivalent to metric table. Does not agree with ANSI/ASME B1.2.

NOTES:
(1) Allowable variation in lead between any two threads shall not be farther apart than the length of the standard gage that is shown in ANSI/ASME B47.1aM.
(2) See para. 5.14.9.
(3) Tolerances apply to designated size of thread. Apply tolerances in accordance with Table 7.
(4) Above MJ300, the tolerance is directly proportional to the tolerance in column 9, in the ratio of the diameter to 300 mm.

Copyright ASME International
Provided by IHS under license with ASME
No reproduction or networking permitted without license from IHS
Not for Resale

TABLE D3 W GAGE TOLERANCES FOR THREAD GAGES (CUSTOMARY)

Pitch, mm	Tolerance on Lead[1,2]		Tolerance on Half-Angle of Thread, deg. ± min	Tolerance on Major or Minor Diameters[3]			Tolerance on Pitch Diameter[3,4]				
	To and Including 12 mm	Above 12 mm		To and Including 12 mm	Above 12 mm to 100 mm	Above 100 mm	To and Including 12 mm	Above 12 mm to 39 mm	Above 39 mm to 100 mm	Above 100 mm to 200 mm	Above 200 mm to 300 mm
1	2	3	4	5	6	7	8	9	10	11	12
0.2	0.00012	...	0 30	0.00031	...	...	0.00012	...	...	...	...
0.25	.00012	...	0 30	.00031	...	...	.00012	...	...	...	...
0.3	.00012	...	0 30	.00031	...	...	.00012	...	...	...	...
0.35	.00012	0.00016	0 20	.00031	0.00031	...	.00012	0.00016	...	...	...
0.4	.00012	.00016	0 20	.00031	.00031	...	.00012	.00016	...	...	...
0.45	.00012	.00016	0 20	.00031	.00039	...	.00012	.00016	...	...	...
0.5	.00012	.00016	0 20	.00031	.00039	...	.00012	.00016	0.00020	...	...
0.55	.00012	.00016	0 18	.00031	.00039	...	.00012	.00016	.00020	...	...
0.6	.00012	.00016	0 18	.00031	.00039	...	.00012	.00016	.00020	...	...
0.65	.00012	.00016	0 15	.00031	.00039	...	.00012	.00016	.00020	...	...
0.7	.00012	.00016	0 15	.00031	.00039	...	.00012	.00016	.00020	...	...
0.75	.00012	.00016	0 12	.00031	.00039	...	.00012	.00016	.00020	...	...
0.8	.00012	.00016	0 12	.00031	.00051	0.00071	.00012	.00016	.00020	0.00024	0.00031
1	.00016	.00016	0 8	.00051	.00051	.00071	.00012	.00016	.00020	.00024	.00031
1.25	.00016	.00016	0 8	.00051	.00051	.00071	.00012	.00016	.00020	.00024	.00031
1.5	.00016	.00016	0 8	.00051	.00051	.00071	.00012	.00016	.00020	.00024	.00031
1.75	.00016	.00016	0 8	.00059	.00059	.00091	.00012	.00020	.00024	.00031	.00039
2	.00020	.00020	0 6	.00059	.00059	.00091	.00016	.00020	.00024	.00031	.00039
2.5	...	.00020	0 6	...	.00059	.00091	...	.00020	.00024	.00031	.00039
3	...	.00024	0 6	...	.00059	.00091	...	.00020	.00024	.00031	.00039
3.5	...	.00024	0 5	...	.00071	.00110	...	.00020	.00024	.00031	.00039
4	...	.00031	0 5	...	.00071	.00110	...	.00020	.00024	.00031	.00039
4.5	...	.00031	0 4	...	.00079	.00130	...	.00020	.00024	.00031	.00039
5	...	.00031	0 4	...	.00079	.00130	...	.00020	.00024	.00031	.00039
5.5	...	.00031	0 4	...	.00079	.00130	...	.00020	.00024	.00031	.00039
6	...	.00031	0 4	...	.00091	.00130	...	.00020	.00024	.00031	.00039
8	...	.00031	0 4	...	.00091	.00150	...	.00020	.00024	.00031	.00039

GENERAL NOTE: Equivalent to metric table. Does not agree with ANSI/ASME B1.2.

NOTES:
(1) Allowable variation in lead between any two threads shall not be farther apart than the length of the standard gage that is shown in ANSI/ASME B47.1aM.
(2) See para. 5.14.9.
(3) Tolerances apply to designated size of thread. Apply tolerances in accordance with Table 8.
(4) Above MJ300, the tolerance is directly proportional to the tolerance in column 12, in the ratio of the diameter to 300 mm.

ASME B1.22M 85 ■ 2595512 0012132 1 ■

Copyright ASME International
Provided by IHS under license with ASME
No reproduction or networking permitted without license from IHS
Not for Resale

TABLE D4 GAGE TOLERANCES FOR PLAIN CYLINDRICAL GAGES (CUSTOMARY)

Size Range, mm		Tolerances, in. [Note (1)]				
Above	To and Including	XX	X	Y	Z [Note (2)]	ZZ
1	2	3	4	5	6	7
1	21	0.00002	0.00004	0.00007	0.00010	0.00020
21	38	.00003	.00006	.00009	.00012	.00024
38	64	.00004	.00008	.00012	.00016	.00032
64	115	.00005	.00010	.00015	.00020	.00040
115	165	.000065	.00013	.00019	.00025	.00050
165	230	.00008	.00016	.00024	.00032	.00064
230	300	.00010	.00020	.00030	.00040	.00080

NOTES:
(1) Tolerances apply to actual diameter of plug or ring. Apply tolerances in accordance with Table 7. Symbols XX, X, Y, Z, and ZZ are standard plain cylindrical gage tolerance classes. Same as tolerances in ANSI/ASME B1.2.
(2) Used as tolerance on plain cylindrical plug and ring gages to check minor diameter for internal threads and outside diameter for external threads. Also used for masters for setting indicating thread gages where design permits.

Copyright ASME International
Provided by IHS under license with ASME
No reproduction or networking permitted without license from IHS
Not for Resale

TABLE D5 LENGTHS OF TAPERLOCK AND TRILOCK THREAD PLUG GAGE BLANKS SELECTED FROM ANSI/ASME B47.1aM (CUSTOMARY)

Thread Sizes		Thread Lengths					
Range		Thread Plug Gages				Fine Pitch Instrument Thread Plug Gages	
Above	To and Including	GO			NOT GO	GO	NOT GO
1	2	3			4	5	6
mm	mm	in.			in.	in.	in.
1.50	2.67	1/4			3/16	3/16	1/8
2.67	3.81	5/16			7/32	7/32	5/32
3.81	5.84	13/32			9/32	9/32	7/32
5.84	9.27	1/2			5/16	5/16	1/4
9.27	12.95	3/4			3/8	3/8	5/16
12.95	20.96	7/8			1/2	1/2	3/8
20.96	28.83	1			5/8	5/8	7/16
		Pitches 2.0 mm and smaller		Pitches larger than 2.0 mm			
28.83	38.35	1		1 1/4	3/4	3/4	1/2
		Pitches 3.5 mm and larger	Pitches between 3.5 mm and 1.5 mm	Pitches 1.5 mm and smaller			
38.35	51.05	1 7/8	1 1/4	7/8	7/8	3/4	5/8
51.05	63.75	2	1 3/8	7/8	7/8	3/4	5/8
63.75	76.45	2	1 1/2	1	1	...	...
76.45	89.15	2	1 1/2	1	1	...	...
89.15	203.45	2 1/8	1 1/2	1	1	...	...
203.45	305.05	2 1/4	1 1/2	1	1	...	...

GENERAL NOTE:
For trilock plug blanks above 19.3 mm and including 38.35 mm, and wire type plug blanks in sizes below 25.65 mm, see ANSI/ASME B47.1aM.

Copyright ASME International
Provided by IHS under license with ASME
No reproduction or networking permitted without license from IHS
Not for Resale

TABLE D6 LENGTHS OF THREAD RING GAGE BLANKS AND TOTAL THREAD LENGTHS OF STANDARD TRUNCATED SETTING PLUG GAGE BLANKS SELECTED FROM ANSI/ASME B47.1aM (CUSTOMARY)

Thread Sizes		Lengths of Thread Ring Gages			Total Thread Lengths of Truncated Thread-Setting Plugs		
Above	To and Including	Thin Ring	Thick Ring	Fine Pitch Instrument Ring	For Thin Ring	For Thick Ring	For Fine Pitch Instrument Ring
1	2	3	4	5	6	7	8
mm	mm	in.	in.	in.	in.	in.	in.
1.50	2.29	3/32	...	...	7/32	...	...
2.29	3.81	5/32	...	...	3/8	...	...
3.81	5.84	3/16	...	...	13/32	...	...
5.84	9.27	11/32	...	1/4	3/4	...	9/16
9.27	12.95	7/16	...	5/16	1	...	11/16
12.95	20.96	9/16	3/4	15/32	1 1/4	1 7/8	1
20.96	28.83	11/16	15/16	17/32	1 1/2	2 1/8	1 1/8
28.83	38.35	3/4	1 1/8	5/8	1 5/8	2 3/8	1 5/16
38.35	51.05	13/16	1 1/4	5/8	1 7/8	2 7/8	1 5/16
51.05	63.75	7/8	1 5/16	11/16	2	3	1 7/16
63.75	76.45	7/8	1 3/8	...	2	3 1/8	...
76.45	89.15	15/16	1 7/16	...	2	3 1/8	...
89.15	101.85	15/16	1 1/2	...	2	3 1/4	...
101.85	159.00	1	1 1/2	...	2 1/8	3 1/4	...

GENERAL NOTES:

(a) Thin gage blanks are used for all NOT GO thread ring gages, recessing sides as applicable.

(b) For GO thread ring gages:

(1) 0.0 mm to 5.84 mm, use thin blanks for all pitches, recessing sides as applicable;

(2) above 5.84 mm to 12.95 mm, use thin blanks for pitches 0.75 mm and larger, and fine pitch instrument blanks for pitches finer than 0.75 mm;

(3) above 12.95 mm to 28.83 mm, use thick blanks for pitches larger than 2 mm, thin blanks for pitches 1 mm to 2 mm, and fine pitch instrument blanks for pitches finer than 1 mm;

(4) above 28.83 mm to 152.65 mm, use thick blanks for pitches larger than 2.5 mm, thin blanks for pitches 1 mm to 2 mm, and fine pitch instrument blanks for pitches finer than 1 mm;

(5) above 152.65 mm, use thick blanks for all pitches.

Copyright ASME International
Provided by IHS under license with ASME
No reproduction or networking permitted without license from IHS
Not for Resale

TABLE D7 SETTING GAGES FOR STANDARD SERIES METRIC MJ SCREW THREADS — LIMITS OF SIZE (CUSTOMARY)

Nominal Size and Pitch	Class	W Thread-Setting Plugs						W Thread-Setting Rings				
		GO			NOT GO			GO		NOT GO		
		Major Diam.		Pitch Diam.	Major Diam.		Pitch Diam.	Pitch Diam.	Minor Diam.	Pitch Diam.	Minor Diam.	Class
		Truncated	Full		Truncated	Full						
1	2	3	4	5	6	7	8	9	10	11	12	13
mm		in.	in.	in.	in.	in.	in.	in.	in.	in.	in.	
MJ1.6 × 0.35	4h6h	0.05681 0.05650	0.06299 0.06330	0.05406 0.05394	0.05524 0.05493	0.06268 0.06237	0.05248 0.05260	... ...	... ...	... ...	... ...	...
MJ2 × 0.4	4h6h	0.07165 0.07134	0.07845 0.07905	0.06850 0.06838	0.07000 0.06969	0.07874 0.07843	0.06685 0.06697	... ...	... ...	... ...	... ...	...
MJ2.5 × 0.45	4h6h	0.09047 0.09016	0.09843 0.09874	0.08693 0.08681	0.08870 0.08839	0.09843 0.09874	0.08516 0.08528	... ...	... ...	... ...	... ...	...
MJ3 × 0.5	4h6h	0.10925 0.10894	0.11811 0.11842	0.10531 0.10519	0.10736 0.10705	0.11811 0.11842	0.10343 0.10355	... ...	... ...	... ...	... ...	...
MJ3.5 × 0.6	4h6h	0.12717 0.12686	0.13780 0.13811	0.12244 0.12232	0.12508 0.12477	0.13780 0.13811	0.12035 0.12047	... ...	... ...	... ...	... ...	...
MJ4 × 0.7	4h6h	0.14508 0.14477	0.15748 0.15779	0.13957 0.13945	0.14287 0.14256	0.15748 0.15779	0.13736 0.13748	... ...	... ...	... ...	... ...	...
MJ5 × 0.8	4h6h	0.18268 0.18237	0.19685 0.19716	0.17638 0.17625	0.18031 0.18000	0.19685 0.19716	0.17402 0.17414	0.17638 0.17650	0.16618 0.16587	0.17953 0.17941	0.17406 0.17375	4H6H
MJ6 × 1	4h6h	0.21850 0.21799	0.23622 0.23673	0.21063 0.21051	0.21571 0.21520	0.23622 0.23673	0.20783 0.20795	0.21063 0.21075	0.19787 0.19736	0.21437 0.21425	0.20535 0.20484	4H5H
MJ7 × 1	4h6h	0.25787 0.25736	0.27559 0.27610	0.25000 0.24988	0.25508 0.25457	0.27559 0.27610	0.24720 0.24732	0.25000 0.25012	0.23724 0.23673	0.25374 0.25362	0.24472 0.24421	4H5H
MJ8 × 1	4h6h	0.29724 0.29673	0.31496 0.31547	0.28937 0.28925	0.29445 0.29394	0.31496 0.31547	0.28657 0.28669	0.28937 0.28950	0.27661 0.27610	0.29311 0.29299	0.28409 0.28358	4H5H
MJ8 × 1.25	4h6h	0.29283 0.29232	0.31496 0.31547	0.28299 0.28287	0.28988 0.28937	0.31496 0.31547	0.28004 0.28016	0.28299 0.28311	0.26701 0.26650	0.28693 0.28681	0.27535 0.27484	4H5H
MJ10 × 0.75	4h6h	0.38043 0.38012	0.39370 0.39401	0.37453 0.37440	0.37795 0.37764	0.39370 0.39401	0.37205 0.37217	0.37453 0.37465	0.36492 0.36461	0.37787 0.37775	0.37063 0.37052	4H5H

ASME B1.22M 85 ■ 2595512 0012136 9 ■

Copyright ASME International
Provided by IHS under license with ASME
No reproduction or networking permitted without license from IHS
Not for Resale

TABLE D7 SETTING GAGES FOR STANDARD SERIES METRIC MJ SCREW THREADS — LIMITS OF SIZE (CUSTOMARY) (CONT'D)

Nominal Size and Pitch	Class	W Thread-Setting Plugs						W Thread-Setting Rings				
		GO			NOT GO			GO		NOT GO		
		Major Diam.		Pitch Diam.	Major Diam.		Pitch Diam.	Pitch Diam.	Minor Diam.	Pitch Diam.	Minor Diam.	Class
		Truncated	Full		Truncated	Full						
1	2	3	4	5	6	7	8	9	10	11	12	13
mm		in.	in.	in.	in.	in.	in.	in.	in.	in.	in.	
MJ10 × 1.25	4h6h	0.37157 0.37106	0.39370 0.39421	0.36173 0.36161	0.36862 0.36811	0.39370 0.39421	0.35878 0.35890	0.36173 0.36185	0.34575 0.34524	0.36567 0.36555	0.35409 0.35358	4H5H
MJ10 × 1.5	4h6h	0.36717 0.36666	0.39370 0.39421	0.35535 0.35523	0.36382 0.36331	0.39370 0.39421	0.35201 0.35213	0.35535 0.35547	0.33618 0.33567	0.35976 0.35964	0.34547 0.34496	4H5H
MJ11 × 1.25	4h6h	0.41094 0.41043	0.43307 0.43358	0.40110 0.40098	0.40799 0.40748	0.43307 0.43358	0.39815 0.39827	0.40110 0.40122	0.38512 0.38461	0.40504 0.40492	0.39346 0.39295	4H5H
MJ12 × 1	4h6h	0.45472 0.45421	0.47244 0.47295	0.44685 0.44673	0.45177 0.45126	0.47244 0.47295	0.44390 0.44402	0.44685 0.44697	0.43409 0.43358	0.45079 0.45067	0.44157 0.44106	4H5H
MJ12 × 1.25	4h6h	0.45031 0.44980	0.47244 0.47295	0.44047 0.44035	0.44697 0.44646	0.47244 0.47295	0.43713 0.43725	0.44047 0.44059	0.42449 0.42398	0.44488 0.44476	0.43283 0.43232	4H5H
MJ12 × 1.75	4h6h	0.44146 0.44087	0.47244 0.47303	0.42768 0.42756	0.43772 0.43713	0.47244 0.47303	0.42394 0.42406	0.42768 0.42780	0.40531 0.40472	0.43260 0.43248	0.41575 0.41516	4H5H
MJ14 × 1.5	4h6h	0.52465 0.52414	0.55118 0.55169	0.51283 0.51267	0.52110 0.52059	0.55118 0.55169	0.50929 0.50945	0.51283 0.51299	0.49366 0.49315	0.51748 0.51732	0.50295 0.50244	4H5H
MJ14 × 2	4h6h	0.51579 0.51520	0.55118 0.55177	0.50004 0.49984	0.51185 0.51126	0.55118 0.55177	0.49610 0.49630	0.50004 0.50024	0.47445 0.47386	0.50524 0.50504	0.48626 0.48567	4H5H
MJ15 × 1	4h6h	0.57283 0.57232	0.59055 0.59106	0.56496 0.56480	0.56988 0.56937	0.59065 0.59106	0.56201 0.56217	0.56496 0.56512	0.55220 0.55169	0.56890 0.56874	0.55969 0.55918	4H5H
MJ16 × 1.5	4h6h	0.60339 0.60288	0.62992 0.63043	0.59157 0.59141	0.59984 0.59933	0.62992 0.63043	0.58803 0.58819	0.59157 0.59173	0.57240 0.57189	0.59622 0.59606	0.58169 0.58118	4H5H
MJ16 × 2	4h6h	0.59453 0.59394	0.62992 0.63051	0.57878 0.57858	0.59059 0.59000	0.62992 0.63051	0.57484 0.57504	0.57878 0.57898	0.55319 0.55260	0.59398 0.58418	0.56500 0.56441	4H5H
MJ17 × 1	4h6h	0.65157 0.65106	0.66929 0.66980	0.64370 0.64354	0.64862 0.64811	0.66929 0.66980	0.64075 0.64091	0.64370 0.64386	0.63094 0.63043	0.64764 0.64748	0.63843 0.63792	4H5H

ASME B1.22M 85 ■ 2595512 0012137 0 ■

Copyright ASME International
Provided by IHS under license with ASME
No reproduction or networking permitted without license from IHS
Not for Resale

TABLE D7 SETTING GAGES FOR STANDARD SERIES METRIC MJ SCREW THREADS — LIMITS OF SIZE (CUSTOMARY) (CONT'D)

Nominal Size and Pitch	Class	W Thread-Setting Plugs						W Thread-Setting Rings				
		GO			NOT GO			GO		NOT GO		
		Major Diam.		Pitch Diam.	Major Diam.		Pitch Diam.	Pitch Diam.	Minor Diam.	Pitch Diam.	Minor Diam.	Class
		Truncated	Full		Truncated	Full						
1	2	3	4	5	6	7	8	9	10	11	12	13
mm		in.	in.	in.	in.	in.	in.	in.	in.	in.	in.	
MJ18 × 1.5	4h6h	0.68213 0.68162	0.70866 0.70917	0.67031 0.67015	0.67858 0.67807	0.70866 0.70917	0.66677 0.66693	0.67031 0.67047	0.65114 0.65063	0.67496 0.67480	0.66043 0.65992	4H5H
MJ20 × 1	4h6h	0.76969 0.76918	0.78740 0.78791	0.76181 0.76165	0.76673 0.76622	0.78740 0.78791	0.75886 0.75902	0.76181 0.76197	0.74906 0.74855	0.76575 0.76591	0.75654 0.75603	4H5H
MJ20 × 1.5	4h6h	0.76087 0.76036	0.78740 0.78791	0.74906 0.74890	0.75732 0.75681	0.78740 0.78791	0.74551 0.74567	0.74906 0.74922	0.72988 0.72937	0.75370 0.75354	0.73917 0.73866	4H5H
MJ20 × 2.5	4h6h	0.74315 0.74256	0.78740 0.78799	0.72346 0.72326	0.73898 0.73839	0.78740 0.78799	0.71929 0.71949	0.72346 0.72366	0.69150 0.69091	0.72898 0.72878	0.70547 0.70488	4H5H
MJ22 × 1.5	4h6h	0.83961 0.83910	0.86614 0.86665	0.82780 0.82764	0.83606 0.83555	0.86614 0.86665	0.82425 0.82441	0.82780 0.82796	0.80862 0.80811	0.83244 0.83193	0.81791 0.81740	4H5H
MJ24 × 2	4h6h	0.90949 0.90890	0.94488 0.94547	0.89374 0.89354	0.90531 0.90472	0.94488 0.94547	0.88957 0.88977	0.89374 0.89394	0.86815 0.86756	0.89925 0.89905	0.87996 0.87937	4H5H
MJ24 × 3	4h6h	0.89177 0.89118	0.94488 0.94547	0.86815 0.86795	0.88685 0.88626	0.94488 0.94547	0.86323 0.86353	0.86815 0.86835	0.82980 0.82921	0.87484 0.87464	0.84555 0.84496	4H5H
MJ25 × 1.5	4h6h	0.95772 0.95721	0.98425 0.98476	0.94591 0.94575	0.95398 0.95347	0.98425 0.98476	0.94217 0.94233	0.94591 0.94607	0.92673 0.92622	0.95083 0.95067	0.93602 0.93551	4H5H
MJ27 × 2	4h6h	1.02760 1.02701	1.06299 1.06358	1.01185 1.01165	1.02343 1.02284	1.06299 1.06358	1.00768 1.00788	1.01185 1.01205	0.98266 0.98565	1.01736 1.01716	0.99807 0.99748	4H5H
MJ30 × 1.5	4h6h	1.15457 1.15406	1.18110 1.18161	1.14276 1.14260	1.15083 1.15032	1.18110 1.18161	1.13902 1.13918	1.14276 1.14292	1.12358 1.12307	1.14768 1.14736	1.13287 1.13236	4H5H
MJ30 × 2	4h6h	1.14571 1.14512	1.18110 1.18169	1.12996 1.12976	1.14154 1.14095	1.18110 1.18169	1.12579 1.12599	1.12996 1.13016	1.10437 1.10378	1.13547 1.13527	1.11618 1.11559	4H5H
MJ30 × 3.5	4h6h	1.11917 1.11846	1.18110 1.18181	1.09161 1.09141	1.11398 1.11327	1.18110 1.18181	1.08642 1.08662	1.09161 1.09181	1.04685 1.04614	1.09870 1.09850	1.06457 1.06386	4H5H

Copyright ASME International
Provided by IHS under license with ASME
No reproduction or networking permitted without license from IHS
Not for Resale

TABLE D7 SETTING GAGES FOR STANDARD SERIES METRIC MJ SCREW THREADS — LIMITS OF SIZE (CUSTOMARY) (CONT'D)

Nominal Size and Pitch	Class	W Thread-Setting Plugs						W Thread-Setting Rings				
		GO			NOT GO			GO		NOT GO		
		Major Diam.		Pitch Diam.	Major Diam.		Pitch Diam.	Pitch Diam.	Minor Diam.	Pitch Diam.	Minor Diam.	Class
		Truncated	Full		Truncated	Full						
1	2	3	4	5	6	7	8	9	10	11	12	13
mm		in.	in.	in.	in.	in.	in.	in.	in.	in.	in.	
MJ33 × 2	4h6h	1.26382 1.26323	1.29921 1.29980	1.24807 1.24787	1.25965 1.25906	1.29921 1.29980	1.24390 1.24410	1.24807 1.24827	1.22248 1.22189	1.25358 1.25338	1.23429 1.23370	4H5H
MJ35 × 1.5	4h6h	1.35142 1.35091	1.37795 1.37846	1.33961 1.33945	1.34768 1.34717	1.37795 1.37846	1.33587 1.33603	1.33961 1.33977	1.32043 1.31992	1.34453 1.34437	1.32972 1.32921	4H5H
MJ36 × 2	4h6h	1.38193 1.38134	1.41732 1.41791	1.36618 1.36598	1.37776 1.37717	1.41732 1.41791	1.36201 1.36221	1.36618 1.36638	1.34059 1.34000	1.37169 1.37149	1.35240 1.35181	4H5H
MJ36 × 4	4h6h	1.34654 1.34583	1.41732 1.41803	1.31504 1.31484	1.34102 1.34031	1.41732 1.41803	1.30953 1.30973	1.31504 1.31524	1.26390 1.26319	1.32252 1.32232	1.28260 1.28331	4H5H
MJ39 × 2	4h6h	1.50004 1.49945	1.53543 1.53602	1.48429 1.48409	1.49587 1.49528	1.53543 1.53602	1.48012 1.48032	1.48429 1.48449	1.45870 1.45811	1.48980 1.48960	1.47051 1.46992	4H5H
MJ40 × 1.5	4h6h	1.54827 1.54776	1.57480 1.57531	1.53646 1.53626	1.54453 1.54402	1.57480 1.57531	1.53272 1.53292	1.53646 1.53666	1.51728 1.51677	1.54138 1.54118	1.52657 1.52606	4H5H
MJ42 × 2	4h6h	1.61815 1.61756	1.65354 1.65413	1.60240 1.60216	1.61398 1.61339	1.65354 1.65413	1.59823 1.59847	1.60240 1.60264	1.57681 1.57622	1.60791 1.60767	1.58862 1.58803	4H5H
MJ42 × 4.5	4h6h	1.57390 1.57311	1.65354 1.65433	1.53846 1.53822	1.56799 1.56720	1.65354 1.65433	1.53256 1.53280	1.53846 1.53870	1.48094 1.48015	1.54634 1.54610	1.50181 1.50102	4H5H
MJ45 × 1.5	4h6h	1.74512 1.74461	1.77165 1.77216	1.73331 1.73311	1.74138 1.74087	1.77165 1.77216	1.72957 1.72977	1.73331 1.73351	1.71413 1.71362	1.73823 1.73803	1.72343 1.72292	4H5H
MJ48 × 2	4h6h	1.85437 1.85378	1.88976 1.89035	1.83862 1.83838	1.84996 1.84937	1.88976 1.89035	1.83421 1.83445	1.83861 1.83886	1.81303 1.81244	1.84453 1.84429	1.82484 1.82425	4H5H
MJ48 × 5	4h6h	1.80126 1.80047	1.88976 1.89055	1.76189 1.76165	1.79496 1.79417	1.88976 1.89055	1.75559 1.75583	1.76189 1.76213	1.69799 1.69720	1.77024 1.77000	1.72004 1.71925	4H5H
MJ50 × 1.5	4h6h	1.94197 1.94146	1.96850 1.96901	1.93016 1.92996	1.93803 1.93752	1.96850 1.96901	1.92622 1.92642	1.93016 1.93036	1.91098 1.91047	1.93535 1.93515	1.92028 1.91977	4H5H

ASME B1.22M 85 ■ 2595512 0012139 4 ■

Copyright ASME International
Provided by IHS under license with ASME
No reproduction or networking permitted without license from IHS
Not for Resale

TABLE D7 SETTING GAGES FOR STANDARD SERIES METRIC MJ SCREW THREADS — LIMITS OF SIZE (CUSTOMARY) (CONT'D)

Nominal Size and Pitch	Class	W Thread-Setting Plugs						W Thread-Setting Rings				
		GO			NOT GO			GO		NOT GO		
		Major Diam.		Pitch Diam.	Major Diam.		Pitch Diam.	Pitch Diam.	Minor Diam.	Pitch Diam.	Minor Diam.	Class
		Truncated	Full		Truncated	Full						
1	2	3	4	5	6	7	8	9	10	11	12	13
mm		in.	in.	in.	in.	in.	in.	in.	in.	in.	in.	
MJ55 × 1.5	4h6h	2.13882 2.13831	2.16535 2.16586	2.12701 2.12681	2.13488 2.13437	2.16535 2.16586	2.12307 2.12327	2.12701 2.12721	2.10783 2.10732	2.13220 2.13200	2.11713 2.11662	4H5H
MJ56 × 2	4h6h	2.16933 2.16874	2.20472 2.20531	2.15358 2.15334	2.16492 2.16433	2.20472 2.20531	2.14917 2.14941	2.15358 2.15382	2.12799 2.12740	2.15949 2.15925	2.13980 2.13921	4H5H
MJ56 × 5.5	4h6h	2.10740 2.10661	2.20472 2.20551	2.06409 2.06385	2.10071 2.09992	2.20472 2.20551	2.05740 2.05764	2.06409 2.06433	1.99374 1.99295	2.07291 2.07267	2.01736 2.01657	4H5H
MJ60 × 1.5	4h6h	2.33567 2.33516	2.36220 2.36278	2.32386 2.32366	2.33173 2.33122	2.36220 2.36278	2.31992 2.32012	2.32386 2.32406	2.30469 2.30418	2.32906 2.32886	2.31398 2.31347	4H5H
MJ64 × 2	4h6h	2.48429 2.48370	2.51969 2.52028	2.46854 2.46830	2.47998 2.47939	2.51969 2.52028	2.46413 2.46437	2.46254 2.46878	2.44295 2.44236	2.47445 2.47421	2.45476 2.45417	4H5H
MJ64 × 6	4h6h	2.41350 2.41259	2.51969 2.52060	2.36626 2.36602	2.40642 2.40551	2.51969 2.52060	2.35917 2.35941	2.36626 2.36650	2.28953 2.28862	2.37555 2.37531	2.31433 2.31342	4H5H
MJ65 × 1.5	4h6h	2.53252 2.53201	2.55906 2.55957	2.52071 2.52051	2.52858 2.52807	2.55906 2.55957	2.51678 2.51698	2.52071 2.52091	2.50154 2.50101	2.52591 2.52571	2.51083 2.51032	4H5H
MJ70 × 1.5	4h6h	2.72937 2.72886	2.75591 2.75642	2.71756 2.71736	2.72543 2.72492	2.75591 2.75642	2.71362 2.71382	2.71756 2.71776	2.69839 2.69788	2.72276 2.72256	2.70768 2.70717	4H5H
MJ72 × 2	4h6h	2.79925 2.79866	2.83465 2.83524	2.78350 2.78326	2.79484 2.79425	2.83465 2.83524	2.77909 2.77933	2.78350 2.78374	2.75791 2.75732	2.78941 2.78917	2.76972 2.76913	4H5H
MJ72 × 6	4h6h	2.72846 2.72755	2.83465 2.83556	2.68122 2.68098	2.72138 2.72047	2.83465 2.83556	2.67413 2.67437	2.68122 2.68146	2.60449 2.60358	2.69051 2.69027	2.62929 2.62838	4H5H
MJ75 × 1.5	4h6h	2.92622 2.92571	2.95276 2.95327	2.91441 2.91421	2.92228 2.92177	2.95276 2.95327	2.91047 2.91067	2.91441 2.91461	2.89524 2.89473	2.91961 2.91941	2.90453 2.90402	4H5H
MJ80 × 1.5	4h6h	3.12307 3.12256	3.14961 3.15012	3.11126 3.11106	3.11913 3.11862	3.14961 3.15012	3.10732 3.10752	3.11126 3.11146	3.09209 3.09158	3.11646 3.11626	3.10138 3.10087	4H5H

ASME B1.22M 85 ■ 2595512 0012140 0 ■

Copyright ASME International
Provided by IHS under license with ASME
No reproduction or networking permitted without license from IHS
Not for Resale

TABLE D7 SETTING GAGES FOR STANDARD SERIES METRIC MJ SCREW THREADS — LIMITS OF SIZE (CUSTOMARY) (CONT'D)

Nominal Size and Pitch	Class	W Thread-Setting Plugs						W Thread-Setting Rings				
		GO			NOT GO			GO		NOT GO		
		Major Diam.		Pitch Diam.	Major Diam.		Pitch Diam.	Pitch Diam.	Minor Diam.	Pitch Diam.	Minor Diam.	Class
		Truncated	Full		Truncated	Full						
1	2	3	4	5	6	7	8	9	10	11	12	13
mm		in.	in.	in.	in.	in.	in.	in.	in.	in.	in.	
MJ80 × 2	4h6h	3.11421 3.11362	3.14961 3.15020	3.09846 3.09822	3.10980 3.10921	3.14961 3.15020	3.09406 3.09430	3.09846 3.09870	3.07287 3.07228	3.10437 3.10413	3.08469 3.08410	4H5H
MJ80 × 6	4h6h	3.04343 3.04252	3.14961 3.15052	2.99618 2.99594	3.03634 3.03543	3.14961 3.15052	2.98909 2.98933	2.99618 2.99642	2.91945 2.91854	3.00547 3.00523	2.94425 2.94334	4H5H
MJ85 × 2	4h6h	3.31106 3.31047	3.34646 3.34705	3.29531 3.29507	3.30665 3.30606	3.34646 3.34705	3.29091 3.29115	3.29531 3.29555	3.26972 3.26913	3.30122 3.30098	3.28154 3.28095	4H5H
MJ90 × 2	4h6h	3.50791 3.50732	3.54331 3.54390	3.49217 3.49193	3.50350 3.50291	3.54331 3.54390	3.48776 3.48800	3.49217 3.49241	3.46657 3.46598	3.49807 3.49783	3.47839 3.47780	4H5H
MJ90 × 6	4h6h	3.43713 3.43622	3.54331 3.54422	3.38988 3.38964	3.43004 3.42913	3.54331 3.54422	3.38280 3.38304	3.38988 3.39012	3.31315 3.31224	3.39917 3.39893	3.33795 3.33704	4H5H
MJ95 × 2	4h6h	3.70476 3.70417	3.74016 3.74075	3.68902 3.68878	3.70012 3.69953	3.74016 3.74075	3.68437 3.68463	3.68902 3.68926	3.66343 3.66284	3.69531 3.69507	3.67524 3.67465	4H5H
MJ100 × 2	4h6h	3.90161 3.90102	3.93701 3.93760	3.88587 3.88563	3.89697 3.89638	3.93701 3.93760	3.88122 3.88146	3.88587 3.88611	3.86028 3.85969	3.89217 3.89193	3.87209 3.87150	4H5H
MJ100 × 6	4h6h	3.83083 3.82992	3.93701 3.93792	3.78358 3.78334	3.82335 3.82244	3.93701 3.93792	3.77610 3.77634	3.78358 3.78382	3.70685 3.70594	3.79343 3.79319	3.73165 3.73074	4H5H
MJ105 × 2	4h6h	4.09846 4.09755	4.13386 4.13477	4.08272 4.08241	4.09382 4.09291	4.13386 4.13477	4.07807 4.07838	4.08272 4.08303	4.05713 4.05622	4.08902 4.08871	4.06894 4.06803	4H5H
MJ110 × 2	4h6h	4.29531 4.29440	4.33071 4.33162	4.27957 4.27926	4.29067 4.28976	4.33071 4.33162	4.47492 4.27523	4.27957 4.27988	4.25398 4.25307	4.28587 4.28556	4.26579 4.26488	4H5H
MJ120 × 2	4h6h	4.68902 4.68811	4.72441 4.72532	4.67327 4.67296	4.68437 4.68346	4.72441 4.72532	4.66862 4.66923	4.67327 4.67358	4.64768 4.64677	4.67957 4.67926	4.65949 4.65858	4H5H
MJ130 × 2	4h6h	5.08272 5.08181	5.11811 5.11902	5.06697 5.06666	5.07807 5.07716	5.11811 5.11902	5.06232 5.06263	5.06697 5.06728	5.04138 5.04047	5.07327 5.07296	5.05319 5.05228	4H5H

Copyright ASME International
Provided by IHS under license with ASME
No reproduction or networking permitted without license from IHS
Not for Resale

TABLE D7 SETTING GAGES FOR STANDARD SERIES METRIC MJ SCREW THREADS — LIMITS OF SIZE (CUSTOMARY) (CONT'D)

Nominal Size and Pitch	Class	W Thread-Setting Plugs						W Thread-Setting Rings				
		GO			NOT GO			GO		NOT GO		
		Major Diam.		Pitch Diam.	Major Diam.		Pitch Diam.	Pitch Diam.	Minor Diam.	Pitch Diam.	Minor Diam.	Class
		Truncated	Full		Truncated	Full						
1	2	3	4	5	6	7	8	9	10	11	12	13
mm		in.	in.	in.	in.	in.	in.	in.	in.	in.	in.	
MJ140 × 2	4h6h	5.47642 5.47551	5.51181 5.51272	5.46067 5.46036	5.47177 5.47086	5.51181 5.51272	5.45602 5.45633	5.46067 5.46098	5.43508 5.43417	5.46697 5.46666	5.44689 5.44598	4H5H
MJ150 × 2	4h6h	5.87012 5.86921	5.90551 5.90642	5.85437 5.85406	5.86547 5.86456	5.90551 5.90642	5.84972 5.85003	5.85437 5.85468	5.82878 5.82787	5.86067 5.86036	5.84059 5.83968	4H5H
MJ160 × 3	4h6h	6.24610 6.24519	6.29921 6.30012	6.22248 6.22217	6.24059 6.23968	6.29921 6.30012	6.21697 6.21728	6.22248 6.22279	6.18413 6.18322	6.22996 6.22965	6.19988 6.19897	4H5H
MJ170 × 3	4h6h	6.63980 6.63889	6.69291 6.69382	6.61618 6.61587	6.63429 6.63338	6.69291 6.69382	6.61067 6.61098	6.61618 6.61649	6.57783 6.57692	6.62366 6.62335	6.59358 6.59267	4H5H
MJ180 × 3	4h6h	7.03350 7.03259	7.08661 7.08752	7.00988 7.00957	7.02799 7.02708	7.08661 7.08752	7.00437 7.00468	7.00988 7.01019	6.97154 6.97063	7.01736 7.01705	6.98728 6.98637	4H5H
MJ190 × 3	4h6h	7.42720 7.42629	7.48031 7.48122	7.40358 7.40327	7.42091 7.42000	7.48031 7.48122	7.39728 7.39759	7.40358 7.40389	7.36524 7.36433	7.41193 7.41162	7.38098 7.38007	4H5H
MJ200 × 3	4h6h	7.82091 7.82000	7.87402 7.87493	7.79728 7.79697	7.81461 7.81370	7.87402 7.87493	7.79098 7.79129	7.79728 7.79759	7.75894 7.75803	7.80563 7.80532	7.77469 7.77378	4H5H

GENERAL NOTE: Thread tolerances from Table D3; plain tolerances from Table D4.

ASME B1.22M 85 ■ 2595512 0012142 4 ■

Copyright ASME International
Provided by IHS under license with ASME
No reproduction or networking permitted without license from IHS
Not for Resale

TABLE D8 GAGES FOR STANDARD THREAD SERIES METRIC MJ SCREW THREADS — LIMITS OF SIZE (CUSTOMARY)

	Gages for External Threads							Gages for Internal Threads										
		X Thread Gages				Z Plain Gages for Major Diam.		X Thread Gages								Z Plain Gages for Minor Diam.		
		GO		NOT GO				GO		Full-Form GO				NOT GO				
Nominal Size and Pitch	Class	Pitch Diam.	Minor Diam.	Pitch Diam.	Minor Diam.	GO	NOT GO	Major Diam.	Pitch Diam.	Major Diam.	Pitch Diam.	Root Radius	Minor Diam.	Major Diam.	Pitch Diam.	GO	NOT GO	Class
1	2	3	4	5	6	7	8	9	10	11	12	13	14	15	16	17	18	19
mm		in.	in.	in.	in.	in.	in.	in.	in.	in.	in.	in.	in.	in.	in.	in.	in.	
MJ1.6 × 0.35	4h6h	0.05406 0.05386	0.04957 0.04926	0.05248 0.05268	0.04972 0.05003	0.06299 0.06289	0.05965 0.05975	0.06299 0.06330	0.05406 0.05426	0.06299 0.06330	0.05406 0.05426	0.00249 0.00271	0.05406 0.05425	0.05890 0.05857	0.05614 0.05594	0.04957 0.04967	0.05350 0.05340	4H6H
MJ2 × 0.4	4h6h	0.06850 0.06830	0.06339 0.06298	0.06685 0.06705	0.06370 0.06409	0.07874 0.07864	0.07500 0.07510	0.07874 0.07913	0.06850 0.06870	0.07874 0.07913	0.06850 0.06870	0.00284 0.00311	0.06851 0.06870	0.07386 0.07347	0.07071 0.07051	0.06339 0.06349	0.06780 0.06770	4H6H
MJ2.5 × 0.45	4h6h	0.08693 0.08673	0.08118 0.08079	0.08516 0.08536	0.08161 0.08200	0.09843 0.09833	0.09449 0.09459	0.09843 0.09882	0.08693 0.08713	0.09843 0.09882	0.08693 0.08713	0.00319 0.00350	0.08693 0.08712	0.09283 0.09244	0.08929 0.08909	0.08118 0.08128	0.08610 0.08600	4H6H
MJ3 × 0.5	4h6h	0.10531 0.10511	0.09894 0.09855	0.10343 0.10363	0.09949 0.09988	0.11811 0.11801	0.11394 0.11404	0.11811 0.11850	0.10531 0.10551	0.11811 0.11850	0.10531 0.10551	0.00355 0.00389	0.10532 0.10551	0.11173 0.11134	0.10780 0.10760	0.09894 0.09904	0.10445 0.10435	4H6H
MJ3.5 × 0.6	4h6h	0.12244 0.12224	0.11476 0.11437	0.12035 0.12055	0.11563 0.11602	0.13780 0.13770	0.13287 0.13297	0.13780 0.13819	0.12244 0.12264	0.13780 0.13819	0.12244 0.12264	0.00426 0.00468	0.12245 0.12263	0.12996 0.12957	0.12524 0.12504	0.11476 0.11486	0.12106 0.12096	4H6H
MJ4 × 0.7	4h6h	0.13957 0.13937	0.13063 0.13024	0.13736 0.13756	0.13185 0.13224	0.15748 0.15738	0.15197 0.15207	0.15748 0.15787	0.13957 0.13977	0.15748 0.15787	0.13957 0.13977	0.00497 0.00547	0.13957 0.13976	0.14803 0.14764	0.14252 0.14232	0.13063 0.13073	0.13772 0.13762	4H6H
MJ5 × 0.8	4h6h	0.17638 0.17607	0.16618 0.16567	0.17402 0.17433	0.16772 0.16823	0.19685 0.19675	0.19094 0.19104	0.19685 0.19736	0.17638 0.17669	0.19685 0.19736	0.17638 0.17669	0.00567 0.00622	0.17638 0.17669	0.18583 0.18532	0.17953 0.17922	0.16618 0.16628	0.17406 0.17396	4H6H
MJ6 × 1	4h6h	0.21063 0.21032	0.19787 0.19736	0.20783 0.20814	0.19996 0.20047	0.23622 0.23612	0.22913 0.22923	0.23622 0.23673	0.21063 0.21094	0.23622 0.23673	0.21063 0.21094	0.00709 0.00779	0.21063 0.21094	0.22224 0.22173	0.21437 0.21406	0.19787 0.19797	0.20535 0.20525	4H5H
MJ7 × 1	4h6h	0.25000 0.24969	0.23724 0.23673	0.24720 0.24751	0.23933 0.23984	0.27560 0.27550	0.26850 0.26860	0.27560 0.27611	0.25000 0.25031	0.27560 0.27611	0.25000 0.25031	0.00709 0.00779	0.25000 0.25031	0.26161 0.26110	0.25374 0.25343	0.23724 0.23734	0.24472 0.24462	4H5H
MJ8 × 1	4h6h	0.28937 0.28906	0.27661 0.27610	0.28657 0.28688	0.27870 0.27921	0.31496 0.31486	0.30787 0.30797	0.31496 0.31547	0.28937 0.28968	0.31496 0.31547	0.28937 0.28968	0.00709 0.00779	0.28938 0.28968	0.30098 0.30047	0.29311 0.29280	0.27661 0.27671	0.28409 0.28399	4H5H
MJ8 × 1.25	4h6h	0.28299 0.28268	0.26701 0.26650	0.28004 0.28035	0.27020 0.27071	0.31496 0.31486	0.30662 0.30672	0.31496 0.31547	0.28299 0.28330	0.31496 0.31547	0.28299 0.28330	0.00890 0.00980	0.28300 0.28330	0.29677 0.29626	0.28693 0.28662	0.26701 0.26711	0.27535 0.27525	4H5H
MJ10 × 0.75	4h6h	0.37453 0.37433	0.36492 0.36453	0.37205 0.37225	0.36614 0.36653	0.39370 0.39360	0.38819 0.38829	0.39370 0.39409	0.37453 0.37473	0.39370 0.39409	0.37453 0.37473	0.00532 0.00586	0.37453 0.37472	0.38378 0.38339	0.37787 0.37767	0.36492 0.36502	0.37083 0.37073	4H5H
MJ10 × 1.25	4h6h	0.36173 0.36142	0.34575 0.34524	0.35878 0.35909	0.34894 0.34945	0.39370 0.39360	0.38535 0.38545	0.39370 0.39421	0.36173 0.36204	0.39370 0.39421	0.36173 0.36204	0.00890 0.00980	0.36174 0.36204	0.37551 0.37500	0.36567 0.36536	0.34575 0.34585	0.35409 0.35399	4H5H
MJ10 × 1.5	4h6h	0.35535 0.35504	0.33618 0.33567	0.35201 0.35232	0.34020 0.34071	0.39370 0.39360	0.38441 0.38451	0.39370 0.39421	0.35535 0.35566	0.39370 0.39421	0.35535 0.35566	0.01067 0.01165	0.35536 0.35566	0.37157 0.37106	0.35977 0.35946	0.33618 0.33628	0.34547 0.34537	4H5H

ASME B1.22M 85 ■ 2595512 0012143 6 ■

Copyright ASME International
Provided by IHS under license with ASME
No reproduction or networking permitted without license from IHS
Not for Resale

TABLE D8 GAGES FOR STANDARD THREAD SERIES METRIC MJ SCREW THREADS — LIMITS OF SIZE (CUSTOMARY) (CONT'D)

	Gages for External Threads							Gages for Internal Threads										
		X Thread Gages				Z Plain Gages for Major Diam.		X Thread Gages								Z Plain Gages for Minor Diam.		
		GO		NOT GO				GO		Full-Form GO				NOT GO				
Nominal Size and Pitch	Class	Pitch Diam.	Minor Diam.	Pitch Diam.	Minor Diam.	GO	NOT GO	Major Diam.	Pitch Diam.	Major Diam.	Pitch Diam.	Root Radius	Minor Diam.	Major Diam.	Pitch Diam.	GO	NOT GO	Class
1	2	3	4	5	6	7	8	9	10	11	12	13	14	15	16	17	18	19
mm		in.	in.	in.	in.	in.	in.	in.	in.	in.	in.	in.	in.	in.	in.	in.	in.	
MJ11 × 1.25	4h6h	0.40110 0.40079	0.38512 0.38461	0.39815 0.39846	0.38831 0.38882	0.43307 0.43297	0.42472 0.42482	0.43307 0.43358	0.40110 0.40143	0.43307 0.43358	0.40110 0.40143	0.00890 0.00980	0.40111 0.40141	0.41488 0.41437	0.40504 0.40473	0.38512 0.38522	0.39346 0.39336	4H5H
MJ12 × 1	4h6h	0.44685 0.44654	0.43409 0.43358	0.44390 0.44421	0.43602 0.43653	0.47244 0.47234	0.46535 0.46545	0.47244 0.47295	0.44685 0.44716	0.47244 0.47295	0.44685 0.44716	0.00709 0.00779	0.44686 0.44716	0.45866 0.45815	0.45079 0.45048	0.43409 0.43419	0.44157 0.44147	4H5H
MJ12 × 1.25	4h6h	0.44047 0.44016	0.42449 0.42398	0.43713 0.43744	0.42728 0.42779	0.47244 0.47234	0.46409 0.46419	0.47244 0.47295	0.44047 0.44078	0.47244 0.47295	0.44047 0.44078	0.00890 0.00980	0.44048 0.44078	0.45472 0.45421	0.44488 0.44457	0.42449 0.42459	0.43283 0.43273	4H5H
MJ12 × 1.75	4h6h	0.42768 0.42737	0.40531 0.40480	0.42394 0.42425	0.41016 0.41067	0.47244 0.47234	0.46201 0.46211	0.47244 0.47295	0.42768 0.42799	0.47244 0.47295	0.42768 0.42799	0.01245 0.01342	0.42768 0.42799	0.44638 0.44587	0.43260 0.43227	0.40531 0.40541	0.41575 0.41565	4H5H
MJ14 × 1.5	4h6h	0.51283 0.51252	0.49366 0.49315	0.50929 0.50960	0.49748 0.49799	0.55118 0.55108	0.54189 0.54199	0.55118 0.55169	0.51283 0.51314	0.55118 0.55169	0.51283 0.51314	0.01067 0.01165	0.51284 0.51314	0.52929 0.52878	0.51748 0.51717	0.49366 0.49376	0.50295 0.50285	4H5H
MJ14 × 2	4h6h	0.50004 0.49973	0.47445 0.47394	0.49610 0.49641	0.48035 0.48086	0.55118 0.55108	0.54016 0.54026	0.55118 0.55169	0.50004 0.50035	0.55118 0.55169	0.50004 0.50035	0.01422 0.01519	0.50004 0.50035	0.52098 0.52047	0.50524 0.50493	0.47445 0.47455	0.48626 0.48616	4H5H
MJ15 × 1	4h6h	0.56496 0.56465	0.55220 0.55169	0.56201 0.56232	0.55413 0.55464	0.59055 0.59045	0.58346 0.58356	0.59055 0.59106	0.56496 0.56527	0.59055 0.59106	0.56496 0.56527	0.00709 0.00779	0.54508 0.54681	0.57677 0.57626	0.56890 0.56859	0.55220 0.55230	0.55969 0.55959	4H5H
MJ16 × 1.5	4h6h	0.59157 0.59126	0.57240 0.57189	0.58803 0.58834	0.57622 0.57673	0.62992 0.62982	0.62063 0.62073	0.62992 0.63043	0.59157 0.59188	0.62992 0.63043	0.59157 0.59188	0.01067 0.01165	0.56174 0.56401	0.60803 0.60752	0.59622 0.59591	0.57240 0.57250	0.58169 0.58159	4H5H
MJ16 × 2	4h6h	0.57878 0.57847	0.55319 0.55268	0.57484 0.57515	0.55909 0.55960	0.62992 0.62982	0.61890 0.61900	0.62992 0.63043	0.57878 0.57909	0.62992 0.63043	0.57878 0.57909	0.01422 0.01519	0.53902 0.54129	0.59972 0.59921	0.58398 0.58367	0.55319 0.55329	0.56500 0.56490	4H5H
MJ17 × 1	4h6h	0.64370 0.64339	0.63094 0.63043	0.64075 0.64106	0.63287 0.63338	0.66929 0.66919	0.66220 0.66230	0.66929 0.66980	0.64370 0.64401	0.66929 0.66980	0.64370 0.64401	0.00709 0.00779	0.62382 0.62555	0.65551 0.65500	0.64764 0.64731	0.63094 0.63104	0.63843 0.63833	4H5H
MJ18 × 1.5	4h6h	0.67031 0.67000	0.65114 0.65063	0.66677 0.66708	0.65496 0.65547	0.70866 0.70856	0.69937 0.69947	0.70866 0.70917	0.67031 0.67062	0.70866 0.70917	0.67031 0.67062	0.01067 0.01165	0.64048 0.64275	0.68677 0.68626	0.67496 0.67465	0.65114 0.65124	0.66043 0.66033	4H5H
MJ20 × 1	4h6h	0.76181 0.76150	0.74906 0.74855	0.75886 0.75917	0.75098 0.75149	0.78740 0.78730	0.78031 0.78041	0.78740 0.78791	0.76181 0.76212	0.78740 0.78791	0.76181 0.76212	0.00709 0.00779	0.74193 0.74366	0.77362 0.77311	0.76575 0.76544	0.74906 0.74916	0.75654 0.75644	4H5H
MJ20 × 1.5	4h6h	0.74906 0.74875	0.72988 0.72937	0.74551 0.74582	0.73370 0.73421	0.78740 0.78730	0.77811 0.77821	0.78740 0.78791	0.74906 0.74937	0.78740 0.78791	0.74906 0.74937	0.01067 0.01165	0.71922 0.72149	0.76551 0.76500	0.75370 0.75339	0.72988 0.72998	0.73917 0.73907	4H5H
MJ20 × 2.5	4h6h	0.72346 0.72307	0.69150 0.69099	0.71929 0.71968	0.69961 0.70012	0.78740 0.78730	0.77421 0.77431	0.78740 0.78791	0.72346 0.72385	0.78740 0.78791	0.72346 0.72385	0.01776 0.01874	0.67374 0.67602	0.74866 0.74815	0.72898 0.72859	0.69150 0.69160	0.70547 0.70537	4H5H

ASME B1.22M 85 ■ 2595512 0012144 8 ■

Copyright ASME International
Provided by IHS under license with ASME
No reproduction or networking permitted without license from IHS
Not for Resale

TABLE D8 GAGES FOR STANDARD THREAD SERIES METRIC MJ SCREW THREADS — LIMITS OF SIZE (CUSTOMARY) (CONT'D)

		Gages for External Threads						Gages for Internal Threads										
		X Thread Gages				Z Plain Gages for Major Diam.		X Thread Gages								Z Plain Gages for Minor Diam.		
		GO		NOT GO				GO		Full-Form GO				NOT GO				
Nominal Size and Pitch	Class	Pitch Diam.	Minor Diam.	Pitch Diam.	Minor Diam.	GO	NOT GO	Major Diam.	Pitch Diam.	Major Diam.	Pitch Diam.	Root Radius	Minor Diam.	Major Diam.	Pitch Diam.	GO	NOT GO	Class
1	2	3	4	5	6	7	8	9	10	11	12	13	14	15	16	17	18	19
mm		in.	in.	in.	in.	in.	in.	in.	in.	in.	in.	in.	in.	in.	in.	in.	in.	
MJ22 × 1.5	4h6h	0.82780 0.82749	0.80862 0.80811	0.82425 0.82456	0.81244 0.81295	0.86614 0.86602	0.85685 0.85697	0.86614 0.86665	0.82780 0.82811	0.86614 0.86665	0.82780 0.82811	0.01067 0.01165	0.79796 0.80023	0.84425 0.84374	0.83244 0.83213	0.80862 0.80874	0.81791 0.81779	4H5H
MJ24 × 2	4h6h	0.89374 0.89343	0.86815 0.86764	0.88957 0.88988	0.87382 0.87433	0.94488 0.94476	0.93386 0.93398	0.94488 0.94539	0.89374 0.89405	0.94488 0.94539	0.89374 0.89405	0.01422 0.01519	0.85340 0.85625	0.91500 0.91449	0.89925 0.89894	0.86815 0.86827	0.87996 0.87984	4H5H
MJ24 × 3	4h6h	0.86815 0.86776	0.82980 0.82909	0.86323 0.86362	0.83961 0.84032	0.94488 0.94476	0.93012 0.93024	0.94488 0.94559	0.86815 0.86854	0.94488 0.94559	0.86815 0.86854	0.02130 0.02228	0.80882 0.81082	0.89846 0.89775	0.87484 0.87445	0.82980 0.82992	0.84555 0.84543	4H5H
MJ25 × 1.5	4h6h	0.94591 0.94560	0.92673 0.92622	0.94217 0.94248	0.93035 0.93086	0.98425 0.98413	0.97496 0.97508	0.98425 0.98476	0.94591 0.94622	0.98425 0.98476	0.94591 0.94622	0.01067 0.01165	0.91607 0.91834	0.96264 0.96211	0.95083 0.95052	0.92673 0.92685	0.93602 0.93590	4H5H
MJ27 × 2	4h6h	1.01185 1.01154	0.98626 0.98575	1.00768 1.00799	0.99193 0.99244	1.06299 1.06287	1.05197 1.05209	1.06299 1.06350	1.01185 1.01216	1.06299 1.06350	1.01185 1.01216	0.01422 0.01519	0.97209 0.97437	1.03311 1.03260	1.01736 1.01705	0.98626 0.98638	0.99807 0.99795	4H5H
MJ30 × 1.5	4h6h	1.14276 1.14245	1.12358 1.12307	1.13902 1.13933	1.12720 1.12771	1.18110 1.18098	1.17181 1.17193	1.18110 1.18161	1.14276 1.14307	1.18110 1.18161	1.14276 1.14307	0.01067 0.01165	1.11292 1.11519	1.15949 1.15898	1.14768 1.14737	1.12358 1.12370	1.13287 1.13275	4H5H
MJ30 × 2	4h6h	1.12996 1.12965	1.10437 1.10386	1.12579 1.12610	1.11004 1.11055	1.18110 1.18098	1.17008 1.17020	1.18110 1.18161	1.12996 1.13027	1.18110 1.18161	1.12996 1.13027	0.01422 0.01519	1.09020 1.09248	1.15122 1.15071	1.13547 1.13516	1.10437 1.10449	1.11618 1.11606	4H5H
MJ30 × 3.5	4h6h	1.09161 1.09122	1.04685 1.04614	1.08642 1.08681	1.05886 1.05957	1.18110 1.18098	1.16437 1.16449	1.18110 1.18181	1.09161 1.09200	1.18110 1.18181	1.09161 1.09200	0.02484 0.02610	1.02201 1.02488	1.12626 1.12555	1.09870 1.09831	1.04685 1.04697	1.06457 1.06445	4H5H
MJ33 × 2	4h6h	1.24807 1.24776	1.22248 1.22197	1.24390 1.24421	1.22815 1.22866	1.29921 1.29909	1.28819 1.28831	1.29921 1.29972	1.24807 1.24838	1.29921 1.29972	1.24807 1.24838	0.01422 0.01519	1.20831 1.21059	1.26933 1.26882	1.25358 1.25327	1.22248 1.22260	1.23429 1.23417	4H5H
MJ35 × 1.5	4h6h	1.33961 1.33930	1.32043 1.31992	1.33587 1.33618	1.32406 1.32457	1.37795 1.37783	1.36866 1.36878	1.37795 1.37846	1.33961 1.33992	1.37795 1.37846	1.33961 1.33992	0.01067 0.01165	1.30977 1.31204	1.35634 1.35583	1.34453 1.34422	1.32043 1.32055	1.32972 1.32960	4H5H
MJ36 × 2	4h6h	1.36618 1.36587	1.34059 1.34008	1.36201 1.36232	1.34626 1.34677	1.41732 1.41720	1.40630 1.40642	1.41732 1.41783	1.36618 1.36649	1.41732 1.41783	1.36618 1.36649	0.01422 0.01519	1.32642 1.32870	1.38744 1.38693	1.37169 1.37138	1.34059 1.34071	1.35240 1.35228	4H5H
MJ36 × 4	4h6h	1.31504 1.31465	1.26390 1.26319	1.30953 1.30992	1.27803 1.27874	1.41732 1.41720	1.39862 1.39874	1.41732 1.41803	1.31504 1.31543	1.41732 1.41803	1.31504 1.31543	0.02843 0.02984	1.23547 1.23870	1.35402 1.35371	1.32252 1.32213	1.26390 1.26402	1.28260 1.28248	4H5H
MJ39 × 2	4h6h	1.48429 1.48398	1.45870 1.45819	1.48012 1.48043	1.46437 1.46488	1.53543 1.53527	1.52441 1.52457	1.53543 1.53594	1.48429 1.48480	1.53543 1.53594	1.48429 1.48480	0.01422 0.01519	1.44453 1.44681	1.50555 1.50504	1.48980 1.48959	1.45870 1.45886	1.47051 1.47035	4H5H
MJ40 × 1.5	4h6h	1.53646 1.53607	1.51728 1.51677	1.53272 1.53311	1.52091 1.52142	1.57480 1.57464	1.56551 1.56567	1.57480 1.57531	1.53646 1.53685	1.57480 1.57531	1.53646 1.53685	0.01067 0.01165	1.50662 1.50897	1.55319 1.55268	1.54138 1.54099	1.51728 1.51744	1.52657 1.52641	4H5H

ASME B1.22M 85 ■ 2595512 0012145 T ■

Copyright ASME International
Provided by IHS under license with ASME
No reproduction or networking permitted without license from IHS
Not for Resale

TABLE D8 GAGES FOR STANDARD THREAD SERIES METRIC MJ SCREW THREADS — LIMITS OF SIZE (CUSTOMARY) (CONT'D)

		Gages for External Threads						Gages for Internal Threads										
		X Thread Gages				Z Plain Gages for Major Diam.		X Thread Gages								Z Plain Gages for Minor Diam.		
		GO		NOT GO				GO		Full-Form GO				NOT GO				
Nominal Size and Pitch	Class	Pitch Diam.	Minor Diam.	Pitch Diam.	Minor Diam.	GO	NOT GO	Major Diam.	Pitch Diam.	Major Diam.	Pitch Diam.	Root Radius	Minor Diam.	Major Diam.	Pitch Diam.	GO	NOT GO	Class
1	2	3	4	5	6	7	8	9	10	11	12	13	14	15	16	17	18	19
mm		in.	in.	in.	in.	in.	in.	in.	in.	in.	in.	in.	in.	in.	in.	in.	in.	
MJ42 × 2	4h6h	1.60240 1.60201	1.57681 1.57630	1.59823 1.59862	1.58248 1.58299	1.65354 1.65338	1.64252 1.64268	1.65354 1.65405	1.60240 1.60279	1.65354 1.65405	1.60240 1.60279	0.01421 0.01520	1.56264 1.56500	1.62366 1.62315	1.60791 1.60752	1.57681 1.57699	1.58862 1.58846	4H5H
MJ42 × 4.5	4h6h	1.53846 1.53795	1.48094 1.48015	1.53256 1.53301	1.49713 1.49792	1.65354 1.65338	1.63386 1.63402	1.65354 1.65433	1.53846 1.53897	1.65354 1.65433	1.53846 1.53897	0.03197 0.03358	1.44898 1.45268	1.58177 1.58098	1.54634 1.54583	1.48094 1.48110	1.50181 1.50165	4H5H
MJ45 × 1.5	4h6h	1.73331 1.73292	1.71413 1.71362	1.72957 1.72996	1.71776 1.71827	1.77165 1.77149	1.76236 1.76252	1.77165 1.77216	1.73331 1.73370	1.77165 1.77216	1.73331 1.73370	0.01067 0.01165	1.70347 1.70582	1.75004 1.74953	1.73823 1.73784	1.71413 1.71429	1.72343 1.72327	4H5H
MJ48 × 2	4h6h	1.83862 1.83823	1.81303 1.81252	1.83421 1.83460	1.81846 1.81897	1.88976 1.88960	1.87874 1.87890	1.88976 1.89027	1.83862 1.83901	1.88976 1.89027	1.83862 1.83901	0.01422 0.01519	1.79886 1.80122	1.86028 1.85977	1.84453 1.84414	1.81303 1.81319	1.82484 1.82468	4H5H
MJ48 × 5	4h6h	1.76189 1.76138	1.69799 1.69720	1.75559 1.75610	1.76122 1.76201	1.88976 1.88960	1.86900 1.86916	1.88976 1.89055	1.76189 1.76240	1.88976 1.89055	1.76189 1.76240	0.03551 0.03728	1.66244 1.66650	1.80961 1.80882	1.77024 1.76973	1.69799 1.69815	1.72004 1.71988	4H5H
MJ50 × 1.5	4h6h	1.93016 1.92977	1.91098 1.91047	1.92622 1.92661	1.91441 1.91492	1.96850 1.96834	1.95921 1.95937	1.96850 1.96901	1.93016 1.93055	1.96850 1.96901	1.93016 1.93055	0.01067 0.01165	1.90032 1.90267	1.94717 1.94666	1.93535 1.93496	1.91098 1.91114	1.92028 1.92012	4H5H
MJ55 × 1.5	4h6h	2.12701 2.12662	2.10783 2.10732	2.12307 2.12346	2.11126 2.11177	2.16535 2.16519	2.15606 2.15622	2.16535 2.16586	2.12701 2.12740	2.16535 2.16586	2.12701 2.12740	0.01067 0.01165	2.09717 2.09952	2.14402 2.14351	2.13220 2.13181	2.10783 2.10799	2.11713 2.11697	4H5H
MJ56 × 2	4h6h	2.15358 2.15319	2.12799 2.12746	2.14917 2.14956	2.13343 2.13394	2.20472 2.20456	2.19370 2.19386	2.20472 2.20523	2.15358 2.15397	2.20472 2.20523	2.15358 2.15397	0.01422 0.01519	2.11382 2.11618	2.17524 2.17473	2.15949 2.15910	2.12799 2.12815	2.13981 2.13965	4H5H
MJ56 × 5.5	4h6h	2.06409 2.06358	1.99374 1.99295	2.05740 2.05791	2.01409 2.01488	2.20472 2.20456	2.18268 2.18284	2.20472 2.20551	2.06409 2.06460	2.20472 2.20551	2.06409 2.06460	0.03906 0.04102	1.95472 1.95913	2.11622 2.11543	2.07291 2.07240	1.99374 1.99380	2.01736 2.01720	4H5H
MJ60 × 1.5	4h6h	2.32386 2.32347	2.30469 2.30418	2.31992 2.32031	2.30811 2.30862	2.36220 2.36204	2.35291 2.35307	2.36220 2.36251	2.32386 2.32425	2.36220 2.36251	2.32386 2.32425	0.01067 0.01165	2.29402 2.29637	2.34087 2.34036	2.32906 2.32867	2.30469 2.30485	2.31398 2.31382	4H5H
MJ64 × 2	4h6h	2.46854 2.46815	2.44295 2.44244	2.46413 2.46452	2.44839 2.44890	2.51969 2.51953	2.50866 2.50882	2.51969 2.52020	2.46854 2.46893	2.51969 2.52020	2.46854 2.46893	0.01422 0.01519	2.42878 2.43114	2.49020 2.48969	2.47445 2.47406	2.44295 2.44311	2.45476 2.45460	4H5H
MJ64 × 6	4h6h	2.36626 2.36575	2.28953 2.28862	2.35917 2.35968	2.31193 2.31284	2.51969 2.51953	2.49606 2.49622	2.51969 2.52060	2.36626 2.36677	2.51969 2.52060	2.36626 2.36677	0.04264 0.04476	2.24693 2.25769	2.42280 2.42199	2.37555 3.37504	2.28953 2.28969	2.31433 2.31417	4H5H
MJ65 × 1.5	4h6h	2.52071 2.52032	2.50154 2.50103	2.51677 2.51716	2.50496 2.50547	2.55906 2.55886	2.54976 2.54996	2.55906 2.55977	2.52071 2.52110	2.55906 2.55977	2.52071 2.52110	0.01067 0.01165	2.49087 2.49322	2.53772 2.53721	2.52591 2.52560	2.50154 2.50174	2.51083 2.51063	4H5H
MJ70 × 1.5	4h6h	2.71756 2.71717	2.69839 2.69788	2.71362 2.71401	2.70181 2.70232	2.75591 2.75571	2.74661 2.74681	2.75591 2.75642	2.71756 2.71795	2.75591 2.75642	2.71756 2.71795	0.01067 0.01165	2.68772 2.69007	2.73457 2.73406	2.72276 2.72237	2.69839 2.69859	2.70768 2.70748	4H5H

Copyright ASME International
Provided by IHS under license with ASME
No reproduction or networking permitted without license from IHS
Not for Resale

TABLE D8 GAGES FOR STANDARD THREAD SERIES METRIC MJ SCREW THREADS — LIMITS OF SIZE (CUSTOMARY) (CONT'D)

	Gages for External Threads							Gages for Internal Threads										
		X Thread Gages				Z Plain Gages for Major Diam.		X Thread Gages								Z Plain Gages for Minor Diam.		
		GO		NOT GO				GO		Full-Form GO				NOT GO				
Nominal Size and Pitch	Class	Pitch Diam.	Minor Diam.	Pitch Diam.	Minor Diam.	GO	NOT GO	Major Diam.	Pitch Diam.	Major Diam.	Pitch Diam.	Root Radius	Minor Diam.	Major Diam.	Pitch Diam.	GO	NOT GO	Class
1	2	3	4	5	6	7	8	9	10	11	12	13	14	15	16	17	18	19
mm		in.	in.	in.	in.	in.	in.	in.	in.	in.	in.	in.	in.	in.	in.	in.	in.	
MJ72 × 2	4h6h	2.78350 2.78311	2.75791 2.75740	2.77909 2.77948	2.76335 2.76386	2.83465 2.83445	2.82362 2.82382	2.83465 2.83516	2.78350 2.78389	2.83465 2.83516	2.78350 2.78389	0.01422 0.01519	2.74375 2.74610	2.80516 2.80465	2.78941 2.78902	2.75791 2.75811	2.76972 2.76952	4H5H
MJ72 × 6	4h6h	2.68122 2.68071	2.60449 2.60358	2.67413 2.67464	2.62689 2.62780	2.83465 2.83445	2.81102 2.81122	2.83465 2.83556	2.68122 2.68173	2.83465 2.83556	2.68122 2.68173	0.04264 0.04476	2.56189 2.56665	2.73776 2.73685	2.69051 2.69000	2.60449 2.60469	2.62929 2.62909	4h5H
MJ75 × 1.5	4h6h	2.91441 2.91402	2.89524 2.89473	2.91047 2.91086	2.89866 2.89917	2.95276 2.95256	2.94346 2.94366	2.95276 2.95327	2.91441 2.91480	2.95276 2.95327	2.91441 2.91480	0.01067 0.01165	2.88457 2.88692	2.93142 2.93091	2.91961 2.91922	2.89524 2.89544	2.90453 2.90433	4H5H
MJ80 × 1.5	4h6h	3.11126 3.11087	3.09209 3.09158	3.10733 3.10772	3.09551 3.09602	3.14961 3.14941	3.14031 3.14051	3.14961 3.15012	3.11126 3.11165	3.14961 3.15012	3.11126 3.11165	0.01067 0.01165	3.08142 3.08377	3.12827 3.12776	3.11646 3.11607	3.09209 3.09229	3.10138 3.10118	4H5H
MJ80 × 2	4h6h	3.09846 3.09807	3.07287 3.07236	3.09406 3.09445	0.07831 3.07882	3.14961 3.14941	3.13858 3.13878	3.14961 3.15012	3.09846 3.09885	3.14961 3.15012	3.09846 3.09885	0.01422 0.01519	3.05871 3.06106	3.12012 3.11961	3.10437 3.10398	3.07287 3.07307	3.08469 3.08449	4H5H
MJ80 × 6	4h6h	2.99618 2.99567	2.91945 2.91834	2.98909 2.98960	2.94185 2.94276	3.14961 3.14941	3.12598 3.12618	3.14961 3.15052	2.99618 2.99669	3.14961 3.15052	2.99618 2.99669	0.04264 0.04476	2.87685 2.88161	3.05272 3.05181	3.00547 3.00496	2.91945 2.91965	2.94425 2.94405	4H5H
MJ85 × 2	4h6h	3.29531 3.29492	3.26972 3.26921	3.29091 3.29130	3.27516 3.27567	3.34646 3.34626	3.33543 3.33563	3.34646 3.34697	3.29531 3.29570	3.34646 3.34697	3.29531 3.29570	0.01422 0.01519	3.25555 3.25791	3.31697 3.31646	3.30122 3.30083	3.26972 3.26992	3.28154 3.28134	4H5H
MJ90 × 2	4h6h	3.49217 3.49178	3.46657 3.46606	3.48776 3.48815	3.47201 3.47252	3.54331 3.54311	3.53228 3.53248	3.54331 3.54382	3.49217 3.49256	3.54331 3.54382	3.49217 3.49256	0.01422 0.01519	3.45241 3.45476	3.51382 3.51331	3.49807 3.49768	3.46657 3.46677	3.47839 3.47819	4H5H
MJ90 × 6	4h6h	3.38988 3.38937	3.31315 3.31224	3.38280 3.38331	3.33555 3.33646	3.54331 3.54311	3.51969 3.51989	3.54331 3.54422	3.38988 3.39039	3.54331 3.54422	3.38988 3.39039	0.04264 0.04476	3.27055 3.27531	3.44642 3.44551	3.39917 3.39866	3.31315 3.31335	3.33795 3.33775	4H5H
MJ95 × 2	4h6h	3.68901 3.68862	3.66343 3.66292	3.68437 3.68476	3.66862 3.66913	3.74016 3.73996	3.72913 3.72933	3.74016 3.74067	3.68901 3.68940	3.74016 3.74067	3.68901 3.68940	0.01422 0.01519	3.64926 3.65161	3.71106 3.71055	3.69531 3.69492	3.66343 3.66363	3.67524 3.67504	4H5H
MJ100 × 2	4h6h	3.88587 3.88548	3.86028 3.85977	3.88122 3.88161	3.86547 3.86598	3.93701 3.93681	3.92598 3.92618	3.93701 3.93752	3.88587 3.88626	3.93701 3.93752	3.88587 3.88626	0.01422 0.01519	3.84611 3.84846	3.90791 3.90740	3.89217 3.89178	3.86028 3.86048	3.87209 3.87189	4H5H
MJ100 × 6	4h6h	3.78358 3.78307	3.70685 3.70594	3.77610 3.77661	3.72886 3.72937	3.93701 3.93681	3.91339 3.91359	3.93701 3.93792	3.78358 3.78409	3.93701 3.93792	3.78358 3.78409	0.04264 0.04476	3.66425 3.66902	3.84067 3.83986	3.79343 3.79292	3.70685 3.70705	3.73165 3.73145	4H5H
MJ105 × 2	4h6h	4.08272 4.08213	4.05713 4.05622	4.07807 4.07866	4.06232 4.06323	4.13386 4.13366	4.12283 4.12303	4.13386 4.13477	4.08272 4.08331	4.13386 4.13477	4.08272 4.08331	0.01422 0.01519	4.04296 4.04551	4.10476 4.10385	4.08902 4.08843	4.05713 4.05733	4.06894 4.06874	4H5H
MJ110 × 2	4h6h	4.27957 4.27898	4.25398 4.25307	4.27492 4.27551	4.25917 4.26008	4.33071 4.33051	4.31969 4.31989	4.33071 4.33162	4.27957 4.28016	4.33071 4.33162	4.27957 4.28016	0.01422 0.01519	4.23981 4.24236	4.30161 4.30070	4.28587 4.28528	4.25398 4.25418	4.26579 4.26559	4H5H

ASME B1.22M 85 ■ 2595512 0012147 3 ■

Copyright ASME International
Provided by IHS under license with ASME
No reproduction or networking permitted without license from IHS
Not for Resale

TABLE D8 GAGES FOR STANDARD THREAD SERIES METRIC MJ SCREW THREADS — LIMITS OF SIZE (CUSTOMARY) (CONT'D)

		Gages for External Threads						Gages for Internal Threads										
		X Thread Gages				Z Plain Gages for Major Diam.		X Thread Gages								Z Plain Gages for Minor Diam.		
		GO		NOT GO				GO		Full-Form GO				NOT GO				
Nominal Size and Pitch	Class	Pitch Diam.	Minor Diam.	Pitch Diam.	Minor Diam.	GO	NOT GO	Major Diam.	Pitch Diam.	Major Diam.	Pitch Diam.	Root Radius	Minor Diam.	Major Diam.	Pitch Diam.	GO	NOT GO	Class
1	2	3	4	5	6	7	8	9	10	11	12	13	14	15	16	17	18	19
mm		in.	in.	in.	in.	in.	in.	in.	in.	in.	in.	in.	in.	in.	in.	in.	in.	
MJ120 × 2	4h6h	4.67327 4.67268	4.64768 4.64677	4.66862 4.66921	4.65287 4.65378	4.72441 4.72416	4.71339 4.71364	4.72441 4.72532	4.67327 4.67386	4.72441 4.72532	4.67327 4.67386	0.01422 0.01519	4.63351 4.63606	4.69531 4.69440	4.67957 4.67898	4.64768 4.64793	4.65949 4.65924	4H5H
MJ130 × 2	4h6h	5.06697 5.06638	5.04138 5.04047	5.06232 5.06291	5.04657 5.04748	5.11811 5.11786	5.10709 5.10734	5.11811 5.11902	5.06697 5.06756	5.11811 5.11902	5.06697 5.06756	0.01422 0.01519	5.02721 5.02976	5.08902 5.08811	5.07327 5.07268	5.04138 5.04163	5.05319 5.05294	4H5H
MJ140 × 2	4h6h	5.46067 5.46008	5.43508 5.43417	5.45602 5.45661	5.44028 5.44119	5.51181 5.51156	5.50079 5.50104	5.51181 5.51272	5.46067 5.46126	5.51181 5.51272	5.46067 5.46126	0.01422 0.01519	5.42091 5.42346	5.48272 5.48181	5.46697 5.46638	5.43508 5.43533	5.44689 5.44664	4H5H
MJ150 × 2	4h6h	5.85437 5.85378	5.82878 5.82787	5.84972 5.85031	5.83398 5.83489	5.90551 5.90526	5.89449 5.89474	5.90551 5.90642	5.85437 5.85496	5.90551 5.90642	5.85437 5.85496	0.01422 0.01519	5.81461 5.81716	5.87642 5.87551	5.86067 5.86008	5.82878 5.82903	5.84059 5.84034	4H5H
MJ160 × 3	4h6h	6.22248 6.22189	6.18413 6.18303	6.21697 6.21756	6.19335 6.19445	6.29921 6.29896	6.28445 6.28470	6.29921 6.30031	6.22248 6.22307	6.29921 6.30031	6.22248 6.22307	0.02130 0.02228	6.16280 6.16535	6.25358 6.25248	6.22996 6.22937	6.18413 6.18438	6.19988 6.19963	4H5H
MJ170 × 3	4h6h	6.61618 6.61559	6.57783 6.57673	6.61067 6.61126	6.58704 6.58814	6.69291 6.69259	6.67815 6.67847	6.69291 6.69401	6.61618 6.61677	6.69291 6.69401	6.61618 6.61677	0.02130 0.02228	6.55650 6.55905	6.64728 6.64618	6.62366 6.62307	6.57783 6.57815	6.59358 6.59326	4H5H
MJ180 × 3	4h6h	7.00988 7.00929	6.97154 6.97044	7.00437 7.00496	6.98075 6.98185	7.08661 7.08629	7.07185 7.07217	7.08661 7.08771	7.00988 7.01047	7.08661 7.08771	7.00988 7.01047	0.02130 0.02228	6.95020 6.95275	7.04098 7.03988	7.01736 7.01677	6.97154 6.97186	6.98728 6.98696	4H5H
MJ190 × 3	4h6h	7.40358 7.40299	7.36524 7.36414	7.39728 7.39787	7.37366 7.37476	7.48031 7.47999	7.46555 7.46587	7.48031 7.48141	7.40358 7.40417	7.48031 7.48141	7.40358 7.40417	0.02130 0.02228	7.34390 7.34645	7.43555 7.43445	7.41193 7.41134	7.36524 7.36556	7.38098 7.38066	4H5H
MJ200 × 3	4h6h	7.79728 7.79669	7.75894 7.75784	7.79098 7.79157	7.76736 7.76846	7.87402 7.87370	7.85925 7.85957	7.87402 7.87512	7.79728 7.79787	7.87402 7.87512	7.79728 7.79787	0.02130 0.02228	7.73760 7.74015	7.82925 7.82815	7.80563 7.80504	7.75894 7.75926	7.77469 7.77437	4H5H

GENERAL NOTE: Thread tolerances from Table D2; plain tolerances from Table D4.

Copyright ASME International
Provided by IHS under license with ASME
No reproduction or networking permitted without license from IHS
Not for Resale

TABLE D9 METRIC THREAD-MEASURING WIRES FOR 60 deg. SCREW THREADS (CUSTOMARY)

Pitch, mm	Wire Sizes *W*, in.			"Best Size" Thread Wire Constant *C*, mm
	Best 0.577350*P* [Note (1)]	Minimum 0.505182*P* [Note (2)]	Maximum 1.010363*P* [Note (2)]	0.866025*P* [Note (3)]
0.2	0.00455	0.00398	0.00796	0.00682
0.25	0.00568	0.00497	0.00994	0.00852
0.3	0.00682	0.00597	0.01193	0.01023
0.35	0.00796	0.00696	0.01392	0.01193
0.4	0.00909	0.00796	0.01591	0.01364
0.45	0.01023	0.00895	0.01790	0.01534
0.5	0.01137	0.00994	0.01989	0.01705
0.6	0.01364	0.01193	0.02387	0.02046
0.7	0.01591	0.01392	0.02784	0.02387
0.75	0.01705	0.01492	0.02983	0.02557
0.8	0.01818	0.01591	0.03182	0.02728
1	0.02273	0.01989	0.03978	0.03410
1.25	0.02841	0.02486	0.04972	0.04262
1.5	0.03410	0.02983	0.05967	0.05114
1.75	0.03978	0.03481	0.06961	0.05967
2	0.04546	0.03978	0.07956	0.06819
2.5	0.05683	0.04972	0.09945	0.08524
3	0.06819	0.05967	0.11933	0.10229
3.5	0.07956	0.06961	0.13922	0.11933
4	0.09092	0.07955	0.15911	0.13638
4.5	0.10229	0.08950	0.17900	0.15343
5	0.11365	0.09945	0.19889	0.17048
5.5	0.12502	0.10939	0.21878	0.18753
6	0.13638	0.11933	0.23867	0.20457

NOTES:
(1) The diameters of "best size" thread balls are the same as the diameters of "best size" thread wires.
(2) Measured PD = M_w + 0.866025*P* − 3*W*.
(3) If "best size" thread wire is used, PD = M_w − *C*.

Copyright ASME International
Provided by IHS under license with ASME
No reproduction or networking permitted without license from IHS
Not for Resale

APPENDIX E
THREAD DIAMETER ADJUSTMENT DUE TO TEMPERATURE VARIATION

(This Appendix is not part of ANSI/ASME B1.22M-1985, and is included for information purposes only.)

E1 SCOPE

This Appendix provides guidance which may be used to determine the extent of thread diameter measurement correction needed to adjust to the equivalent diameter at the standard temperature of 20°C ±1°C.

E1.1 Limitations

The method presented is an approximation, since diametral change is affected by temperature range and by the complexity of gages and their components. Note must also be made that change in length of thread, due to temperature, will change the pitch, hence the functional diameter of the thread, in addition to the change in pitch caused by diametral change.

E1.2 Application

The method that follows is applicable where threaded product is made from material differing from gage material and where measurements are made at temperatures other than standard. Every effort must be made to maintain stable product and gage temperature close to standard in order to minimize uncertainties (see para. E1.1).

E2 THREAD DIAMETER ADJUSTMENT FOR TEMPERATURES ABOVE AND BELOW STANDARD

Since product threads are checked in the manufacturing area at nonstandard temperatures, the uncertainty in size (diameter correction C_T) between gage and dissimilar threaded materials should not exceed one-tenth of the pitch diameter tolerance.

E2.1 Thread Diameter Adjustment for Size Indicating Gage Measurements

C_T is equal to the sum of pitch diameter corrections due to thermal expansion or contraction in diameter (C_{TPD}) and lead (C_{TL}), or $C_T = C_{TPD} + C_{TL}$. By applying the value (C_T) to the indicating gage measurement on the product thread, the threaded product size at 20°C is obtained. Plus (C_T) values are added to and minus (C_T) values are subtracted from the indicating gage reading on the product thread to obtain product size.

E2.2 Pitch Diameter Correction (C_{TPD}) Due to Thermal Expansion or Contraction in Diameter

By inserting the appropriate value in the following formula, the correction (C_{TPD}) is obtained.

$$C_{TPD} = -(e_p - e_g)\,(t_r - 20°C)\,(PD)$$

where

C_{TPD} = pitch diameter correction, mm
e_p = linear thermal coefficient for threaded product material per degree Celsius
e_g = linear thermal coefficient for gage material per degree Celsius
t_r = room temperature, °C
PD = basic pitch diameter of thread, mm

E2.3 Pitch Diameter Correction (C_{TL}) Due to Thermal Expansion or Contraction of Lead

Use the following formulas:

(*a*) For external product thread compared to a setting gage at shop room temperature, C_{TL} is applied with a minus sign.

$$C_{TL} = -|1.732\,(e_p - e_g)\,(t_r - 20°C)\,(LG)|$$

(*b*) For internal product thread compared to a setting gage at shop room temperature, C_{TL} is applied with a plus sign.

$$C_{TL} = +|1.732\,(e_p - e_g)\,(t_r - 20°C)\,(LG)|$$

Copyright ASME International
Provided by IHS under license with ASME
No reproduction or networking permitted without license from IHS
Not for Resale

(*c*) For external product thread measured with thread segment type gage preset at standard temperature of 20°C ± 1°C, C_{TL} is applied with a minus sign.

$$C_{TL} = -|1.732\ (e_p + e_g)\ (t_r - 20°C)\ (LG)|$$

(*d*) For internal product thread measured with thread segment type gage preset at standard temperature of 20°C ± 1°C, C_{TL} is applied with a plus sign.

$$C_{TL} = +|1.732\ (e_p + e_g)\ (t_r - 20°C)\ (LG)|$$

where

$|XXXXX|$ = plus value of bracketed term XXXXX regardless of sign
C_{TL} = diameter correction, mm
LG = length of gage thread engagement, mm

NOTE: For single-element pitch diameter gaging, C_{TL} may be considered equal to zero.

E2.3.1 Thread Diameter Evaluation for Limit Gaging. At nonstandard temperature, fixed limit gages such as rings and plugs do not accept threaded product at the tolerance limits. C_T is equal to the sum of pitch diameter corrections due to thermal expansion or contraction in diameter (C_{TPD}) and lead (C_{TL}), or $C_T = C_{TPD} + C_{TL}$. The C_T values are applied to the gages and thus define their modified limits. The C_T values help the inspector to make a decision on room temperatures.

NOTE: A negative value of C_T is the amount by which a product functional or pitch diameter appears to be too large when checked by a limit gage. A plus value is the opposite.

E2.4 Pitch Diameter Correction (C_{TPD}) Due to Thermal Expansion or Contraction in Diameter

By inserting the appropriate values in the following formula, the correction (C_{TPD}) is obtained.

$$C_{TPD} = -(e_p - e_g)\ (t_r - 20°C)\ (PD)$$

E2.4.1 Pitch Diameter Correction (C_{TL}) Due to Thermal Expansion or Contraction of Lead. Use the following formulas:

(*a*) For external product thread inspected with a fixed limit gage, e.g., a ring gage, C_{TL} is applied with a minus sign.

$$C_{TL} = -|\ 1.732\ (e_p + e_g)\ (t_r - 20°C)\ (LG)|$$

(*b*) For internal product thread inspected with a fixed limit gage, e.g., a plug gage, C_{TL} is applied with a plus sign.

$$C_{TL} = +|\ 1.732\ (e_p + e_g)\ (t_r - 20°C)\ (LG)|$$

NOTE: For single-element pitch diameter gaging, C_{TL} may be considered equal to zero.

E2.5 Coefficient of Linear Thermal Expansion

Some useful coefficients of linear thermal expansion per degree Celsius are listed below. However, if the expansion correction is critical, the coefficient for the temperature range of the specific metal or alloy in use should be determined.

Metal or Alloy	*Coefficient*
Aluminum alloy 7075	23.2×10^{-6}
Brass	18.7×10^{-6}
Bronze, aluminum	16.2×10^{-6}
Chromium carbide	8.5×10^{-6}
Copper	16.9×10^{-6}
Inconel 600	10.4×10^{-6}
Inconel X-750	10.3×10^{-6}
Iron	11.9×10^{-6}
Monel 400	11.5×10^{-6}
Monel K-500	11.2×10^{-6}
Steel 1020	12.1×10^{-6}
Steel, corrosion resistant (18Cr-8Ni stainless)	17.3×10^{-6}
Steel, corrosion and heat resistant, A-286	16.4×10^{-6}
Titanium alloy Ti-6Al-4V	8.8×10^{-6}
Tungsten carbide	6.5×10^{-6}

Copyright ASME International
Provided by IHS under license with ASME
No reproduction or networking permitted without license from IHS
Not for Resale

AMERICAN NATIONAL STANDARDS FOR SCREW THREADS

(Published by The American Society of Mechanical Engineers)

TITLE OF STANDARD

Unified Inch Screw Threads (UN and UNR Thread Form) B1.1-1982
Gages and Gaging for Unified Inch Screw Threads B1.2-1983
Screw Thread Gaging Systems for Dimensional
Acceptability — Inch and Metric Screw Threads (UN, UNR, UNJ, M, and MJ) B1.3M-1986
Acme Screw Threads B1.5-1977
Nomenclature, Definitions, and Letter Symbols for Screw Threads B1.7M-1984
Stub Acme Screw Threads B1.8-1977
Buttress Inch Screw Threads 7°/45° Form With 0.6 Pitch Basic Height of
Thread Engagement ..... B1.9-1973(R1985)
Unified Miniature Screw Threads B1.10-1958
Microscopic Objective Thread ..... B1.11-1958(R1978)
Class 5 Interference-Fit Thread B1.12-1972
Metric Screw Threads — M Profile B1.13M-1983
Gages and Gaging for Metric M Screw Threads B1.16M-1984
Metric Screw Threads for Commercial Mechanical
Fasteners — Boundary Profile Defined B1.18M-1982
Gages for Metric Screw Threads for Commercial Mechanical
Fasteners — Boundary Profile Defined B1.19M-1984
Pipe Threads, General Purpose (Inch) B1.20.1-1983
Dryseal Pipe Threads (Inch) ..... B1.20.3-1976(R1982)
Dryseal Pipe Threads (Metric Translation of B1.20.3-1976) ..... B1.20.4-1976(R1982)
Gaging for Dryseal Pipe Threads (Inch) B1.20.5-1978
Gaging for Dryseal Pipe Threads (Metric Translation
of B1.20.5-1978) B1.20.6M-1984
Hose Coupling Screw Threads ..... B1.20.7-1966(R1983)
Metric Screw Threads — MJ Profile B1.21M-1978
Gages and Gaging for MJ Series Metric Screw Threads B1.22M-1985

The ASME Publications Catalog shows a complete list of all the Standards published by the Society.

The catalog and binders for holding these Standards are available upon request.

Copyright ASME International
Provided by IHS under license with ASME
No reproduction or networking permitted without license from IHS

Not for Resale