STD.ASME B1.21M-ENGL 1997 ■ 0759670 0589888 843 ■

ASME B1.21M-1997

METRIC SCREW THREADS: MJ PROFILE

(Revision of ANSI B1.21M-1978)

AN AMERICAN NATIONAL STANDARD

Copyright ASME International
Provided by IHS under license with ASME
No reproduction or networking permitted without license from IHS
Not for Resale

The American Society of Mechanical Engineers

AN AMERICAN NATIONAL STANDARD

METRIC SCREW THREADS: MJ PROFILE

ASME B1.21M-1997
(Revision of ANSI B1.21M-1978)

Copyright ASME International
Provided by IHS under license with ASME
No reproduction or networking permitted without license from IHS

Not for Resale

Date of Issuance: April 2, 1998

This Standard will be revised when the Society approves the issuance of a new edition. There will be no addenda or written interpretations of the requirements of this Standard issued to this edition.

ASME is the registered trademark of The American Society of Mechanical Engineers.

This code or standard was developed under procedures accredited as meeting the criteria for American National Standards. The Consensus Committee that approved the code or standard was balanced to assure that individuals from competent and concerned interests have had an opportunity to participate. The proposed code or standard was made available for public review and comment which provides an opportunity for additional public input from industry, academia, regulatory agencies, and the public-at-large.

ASME does not "approve," "rate," or "endorse" any item, construction, proprietary device, or activity.

ASME does not take any position with respect to the validity of any patent rights asserted in connection with any items mentioned in this document, and does not undertake to insure anyone utilizing a standard against liability for infringement of any applicable Letters Patent, nor assumes any such liability. Users of a code or standard are expressly advised that the determination of the validity of any such patent rights, and the risk of the infringement of such rights, is entirely their own responsibility.

Participation by federal agency representative(s) or person(s) affiliated with industry is not to be interpreted as government or industry endorsement of this code or standard.

ASME accepts responsibility for only those interpretations issued in accordance with governing ASME procedures and policies which preclude the issuance of interpretations by individual volunteers.

No part of this document may be reproduced in any form,
in an electronic retrieval system or otherwise,
without the prior written permission of the publisher.

The American Society of Mechanical Engineers
345 East 47th Street, New York, NY 10017

Copyright © 1998 by
THE AMERICAN SOCIETY OF MECHANICAL ENGINEERS
All Rights Reserved
Printed in U.S.A.

Copyright ASME International
Provided by IHS under license with ASME
No reproduction or networking permitted without license from IHS

Not for Resale

FOREWORD

(This Foreword is not part of ASME B1.21M-1997.)

This Metric Screw Thread Standard, MJ Profile, is a hard metric version similar to the UNJ Inch ASME B1.15 and MIL-S-8879 Standards which have a 0.15011*P* to 0.18042*P* controlled radius root in the external thread and the internal thread minor diameter truncated to accommodate the external thread maximum root radius. This metric thread is recommended for use in high temperature or high fatigue applications.

Tolerance Class 4H5H/4h6h is approximately equivalent to a Class 3A/3B Inch J Thread and is intended for aerospace applications.

Tabulated data has been provided for Tolerance Class 4g6g and 4G6G/4G5G for commercial applications or when the standard reduction for coating or plating provided in this Standard is not adequate for the coating thickness required.

Table 6 in this issue has been added to define limiting dimensions for Tolerance Class 6g/6H for commercial producers and users of this class. Tolerance Class 6g/6H is intended for use only in commercial applications.

This metric Standard has as its original basis the work done under the direction of the SAE E21/E25 Metric Thread Panel, which developed and published SAE Aerospace Standard AS 1370. A replica of AS 1370 was ballot circulated in American National Standards Institute Committee B1 as ANSI B1.21.

Since the UNJ inch screw thread is predominantly used in aerospace designs, the aerospace industry decided to produce a hard metric version for aerospace metric design. The MJ screw thread project was initiated by SAE Committee E21, which was responsible for aerospace propulsion design standards. At the Committee's October 25, 1971 meeting, Project E21-122 was established to develop metric screw thread requirements for metric aerospace fasteners and threaded parts.

A metric thread panel was organized to include representation from throughout the aerospace industry. Participating organizations included the following:

SAE/E21 — Aerospace Propulsion Design Standards
SAE/E25 — Aerospace Propulsion Utility Parts Standards
AIA/NASC — National Aerospace Standards Committee (airframe)
ATA — Air Transport Association
SBAC — Society of British Aircraft Constructors
ALMA — American Locknut Manufacturers Association
APFA — Aerospace Precision Fastener Association
ASD/WPAFB — Aeronautical Systems Division, U.S. Air Force
NAPTC — Naval Air Propulsion Test Center, U.S. Navy
Liaison representation from ANSI/OMFS

This Panel took into account the activities of ANSI/OMFS, SBAC, ATA, AECMA, ISO/TC 20/SC 4, and ISO/TC 1/SC 5 in order to reflect agreements compatible with international and U.S. aerospace metric screw thread requirements, as well as coordinating with ANSI/OMFS requirements.

Copyright ASME International
Provided by IHS under license with ASME
No reproduction or networking permitted without license from IHS
Not for Resale

Much work was done in developing surveys and drafts which were ballot circulated throughout the aerospace industry for resolving the thread design elements and involved the following:

(a) metric diameter/pitch combinations for aerospace fasteners,

(b) metric diameter/pitch combinations for other aerospace parts,

(c) thread design form, and

(d) thread tolerance class and formulae.

After fourteen meetings of the Metric Thread Panel, including special meetings with OMFS and the military, the aerospace industry ballot circulated the AS 1370 MJ Metric Screw Thread Standard for approval. In May 1976, it was approved and published by the SAE Aerospace Council. In addition, two preliminary documents were also published. AS 1337, published in March 1974, lists the aerospace diameter/pitch combinations for threaded fasteners, and AS 1338, published in February 1976, documents the MJ profile requirements and tolerance class. Following the publication of AS 1370, an additional standard, AS 1421 — listing aerospace diameter/pitch combinations for shaft or bearing retaining screw threads — was published in August 1976.

The International Organization for Standardization Subcommittee for Aerospace Bolts and Nuts, ISO/TC 20/SC 4, has accepted the MJ metric thread profile for aerospace metric threaded fasteners. AS 1370 is serving as the basis for establishing the ISO International Standard for MJ metric screw threads.

Upon publication of AS 1370, SAE agreed to submit this Standard to ANSI Committee B1 for approval as the American National Standard for MJ metric screw threads. ANSI B1.21 was approved by American National Standards Committee B1 on February 23, 1977.

The proposed Standard was submitted by Standards Committee B1 to the Secretariat and ANSI. It was approved and formally designated an American National Standard on November 21, 1978.

This issue updates the 1978 issue and includes:

(a) the addition of Tolerance Class 4G6G and 4G5G/4g6g to be comparable with ASME B1.15, Unified Inch Screw Threads (UNJ Thread Form), which includes Class 2 UNJ Threads;

(b) the addition of Tolerance Class 6H/6g to provide a Metric J profile comparable with ASME B1.13M, Metric Screw Threads — M Profile, for use in general applications; and

(c) changes in rounding procedures which follow the principles of ASME B1.30M.

Suggestions for improvement of this Standard are welcome. They should be sent to Secretary, ASME B1 Standards Committee, 345 East 47th Street, New York, NY 10017.

ASME B1.21M-1997 was approved as an American National Standard on December 9, 1997.

Copyright ASME International
Provided by IHS under license with ASME
No reproduction or networking permitted without license from IHS
Not for Resale

ASME STANDARDS COMMITTEE B1
Standardization and Unification of Screw Threads

(The following is the roster of the Committee at the time of approval of this Standard.)

OFFICERS

A. D. Shepherd, Jr., *Chair*
D. S. George, *Vice Chair*
G. L. Fechter, *Secretary*

COMMITTEE PERSONNEL

J. R. Anderson, Delphi Harrison Thermal System, Lockport, New York
A. L. Barrows, Greenfield Industries, Greenfield, Massachusetts
M. H. Bernier, Pilgrim Screw Corp., Providence, Rhode Island
J. M. Bobelak, McDonnell Douglas Corp., St. Louis, Missouri
D. P. Cadieux, Glastonbury Gage, Glastonbury, Connecticut
F. G. Calderone, Quality Systems Implementers, Troy, Ohio
J. Davis, U.S. NRC, Washington, D.C.
L. N. Dixon, Jr., General Electric, Cincinnati, Ohio
R. Dodge, Pennoyer-Dodge Co., Glendale, California
A. E. Ellis, Consultant, Bedford, Massachusetts
G. L. Fechter, The American Society of Mechanical Engineers, New York, New York
R. E. Ferry, Jr., R. B. & W., Caraopolis, Pennsylvania
G. A. Flannery, Mercury Gage Co., Detroit, Michigan
H. N. Frost, Defense Industrial Supply Center, Philadelphia, Pennsylvania
D. S. George, Ford Motor Co., Dearborn, Michigan
J. R. Gervasi, Kerr Lakeside, Inc., Euclid, Ohio
J. Greenslade, Greenslade & Co., Fort Worth, Texas
L. C. Johnson, The Johnson Gage Co., Bloomfield, Connecticut
S. I. Kanter, Hanson-Whitney Co., Windsor, Connecticut
R. P. Knittel, Leitech/AMTMA, Madison, Wisconsin
J. A. Krippes, Pensacola, Florida
K. E. McCullough, Consultant, Willow Grove, Pennsylvania
D. Miskinis, Greenfield Industries, Evans, Georgia
W. R. Newman, Alpha Bolt Co., Madison Heights, Michigan
M. W. Rose, Southern Gage, Inc., Erin, Tennessee
D. M. Satava, Consultant, Chagrin Falls, Ohio
E. Schwartz, Consultant, Philadelphia, Pennsylvania
R. H. Searr, Quantum Insp. and Testing Ltd., Burlington, Ontario, Canada
R. E. Seppey, Consultant, Laporte, Indiana
A. D. Shepherd, Jr., Emuge Corp., Northborough, Massachusetts
A. G. Strang, Consultant, Boyds, Maryland
R. D. Strong, General Motors Corp., Warren, Michigan
J. F. Sullivan, National Fasteners Distr. Assoc., South Boston, Massachusetts
R. L. Tennis, Caterpillar, Inc., Mossville, Illinois

SUBCOMMITTEE 15 — UNJ Screw Threads

R. E. Seppey, *Chair,* Laporte, Indiana
B. I. Armstrong, Naval Warfare Assessment Division, Corona, California
J. M. Bobelak, McDonnell Douglas Corp., St. Louis, Missouri

Copyright ASME International
Provided by IHS under license with ASME
No reproduction or networking permitted without license from IHS
Not for Resale

L. N. Dixon, Jr., General Electric, Cincinnati, Ohio
R. E. Ferry, Jr., R. B. & W., Coraopolis, Pennsylvania
G. A. Flannery, Mercury Gage Co., Detroit, Michigan
H. N. Frost, Defense Industrial Supply Center, Philadelphia, Pennsylvania
D. S. George, Ford Motor Co., Dearborn, Michigan
L. C. Johnson, The Johnson Gage Co., Bloomfield, Connecticut
J. M. Kane, Boeing Defense and Space Group, Seattle, Washington
S. I. Kanter, Hanson-Whitney, Windsor, Connecticut
D. D. Katz, Precision Fittings, Wellington, Ohio
J. A. Krippes, Pensacola, Florida
K. E. McCullough, Consultant, Willow Grove, Pennsylvania
D. J. Miley, Caterpillar, Inc., Peoria, Illinois
W. R. Newman, Alpha Bolt Co., Madison Heights, Michigan
C. G. Scandone III, Defense Industrial Supply Center, Philadelphia, Pennsylvania
B. Sheffler, Dresser-Rand Co., Painted Post, New York
R. D. Strong, General Motors Corp., Warren, Michigan
R. L. Tennis, Caterpillar, Inc., Mossville, Illinois
C. J. Wilson, Industrial Fasteners Institute, Cleveland, Ohio

Copyright ASME International
Provided by IHS under license with ASME
No reproduction or networking permitted without license from IHS
Not for Resale

CONTENTS

Foreword iii
Standards Committee Roster v

1 General 1
1.1 Scope 1
1.2 Field of Application 1
1.3 Assembly 1
1.4 Federal Government Use 1
1.5 References 1

2 Profile of Thread 1
2.1 Basic Profile 1
2.2 Basic Thread Profile Symbols 2
2.3 Design Profiles 2
2.4 Root Radius of the Thread 2

3 Series of Threads 3

4 Thread Characteristics 3
4.1 Length of Thread Engagement, LE 3
4.2 Tolerance System 4
4.3 Limits of Size 4
4.4 Thread Form Tolerances 6

5 Dimensional Accommodation of Coatings and Platings 7
5.1 Coated External Threads, Tolerance, Position h 7
5.2 Coating Threads With Dry Film Lubricant 7
5.3 Coated External Threads, Tolerance Position g 7
5.4 Coated Internal Threads, Tolerance Position H 7
5.5 Coated Internal Threads, Tolerance Position G 7

6 Designation of Threads 7
6.1 Basic Designation 7
6.2 Standard Thread Series Designation 7
6.3 Designation of Coated Threads 8
6.4 Designation of Threads Having Modified Crests 8
6.5 Designation of Threads Having Special Length Requirements 8
6.6 Designation of Special Series Threads 9

7 Acceptability 9

Copyright ASME International
Provided by IHS under license with ASME
No reproduction or networking permitted without license from IHS
Not for Resale

Figures

1 Basic Profile 2
2 Internal Thread Tolerances 3
3 External Thread Tolerances 4
4 Root Radius of External Thread 5

Tables

1 Limit Values, External Thread Root Radius, R (mm) 11
2 Metric J Screw Thread Standard Series, mm 12
3 Standard Series for Aerospace Screws, Bolts, and Nuts 14
4 Standard Series for Aerospace Fluid System Fittings 14
5 Other Standard Series Preferred Screw Threads 15
6 Limiting Dimensions of Metric J Thread Series for Tolerance Class 6H/6g, mm 16
7 Limiting Dimensions of Metric J Thread Standard Series, mm 20
8 Theoretical Thread Profile Data, mm 40
9 Major Diameter Tolerance, External Thread 42
10 Minor Diameter Tolerance, Internal Thread 42
11 Pitch Diameter Tolerance, mm 43
12 Allowable Variations in Lead and Equivalent Change in Functional Diameter, mm 44
13 Allowable Variations in 30 deg Basic Half-Angle of Screw Threads 50

Appendices

A Coating of Threads 51
B Symbols for MJ Thread Dimensions and Tolerances 53

Copyright ASME International
Provided by IHS under license with ASME
No reproduction or networking permitted without license from IHS
Not for Resale

METRIC SCREW THREADS: MJ PROFILE

1 GENERAL

1.1 Scope

This Standard establishes the basic triangular profile for the MJ thread form; provides a system of designations; lists the standard series of diameter/pitch combinations for diameters from 1.6 to 200 mm; and specifies limiting dimensions and tolerances.

It specifies the characteristics of the MJ metric series of threads having a minimum $0.15011P$ radius at the root of the external thread, and also having the minor diameter of the external and internal threads increased above the ASME B1.13M thread form to accommodate the external thread root radius.

1.2 Field of Application

The MJ screw thread is designed for use on highly stressed applications requiring high fatigue strength. For aerospace applications, except for fluid fittings, Tolerance Classes 4H5H or 4G6G and 4h6h should be used. These classes approximate Classes 3B/3A in the inch system. Aerospace fluid fittings use Classes 4H5H or 4H6H and 4g6g.

Tolerance Classes 4G5G or 4G6G and 4g6g are provided for use when thread allowances are required. These classes result in a slightly tighter fit than the inch Classes 2B/2A at minimum material condition.

Additional Tolerance Classes 6H/6g are included in this Standard to provide appropriate product selection based on general applications. These classes and the selection of standard diameter/pitch combinations are the same as those provided for the M profile metric screw threads in ASME B1.13M. Classes 6H/6g result in a slightly looser fit than inch Classes 2B/2A at minimum material condition.

1.3 Assembly

Threads conforming to the M profile (ASME B1.13M) and the MJ profile are not interchangeable because of possible interference between the MJ external thread minor diameter and the B1.13M internal thread minor diameter. However, the MJ internal thread will assemble with the B1.13M external thread.

1.4 Federal Government Use

When this Standard is approved by the Department of Defense and Federal Agencies and is incorporated into FED-STD-H28/21, Screw Thread Standards for Federal Services, Section 21, the use of this Standard by the Federal Government is subject to all the requirements and limitations of FED-STD-H28/21.

1.5 References

The latest issues of the following documents form a part of this Standard to the extent specified herein.

American National Standards

ASME B1.3M, Screw Thread Gaging Systems for Dimensional Acceptability — Inch and Metric Screw Threads (UN, UNR, UNJ, M, and MJ)

ANSI/ASME B1.7M, Nomenclature, Definitions, and Letter Symbols for Screw Threads

ASME B1.10M, Unified Miniature Screw Threads

ASME B1.13M, Metric Screw Threads — M Profile

ASME B1.15, Unified Inch Screw Threads (UNJ Thread Form)

ANSI/ASME B1.22M, Gages and Gaging Practice for MJ Series Metric Screw Threads

ASME B1.30M, Screw Threads — Standard Practice for Calculating and Rounding Dimensions

ISO Standards

ISO 261, ISO General Purpose Metric Screw Threads — General Plan

ISO 965-1, ISO General Purpose Metric Screw Threads — Part 1 Principles and Basic Data

ISO 5855-1-2-3, Aerospace MJ Threads

2 PROFILE OF THREAD

2.1 Basic Profile

The basic profile is the theoretical profile corresponding to the basic dimensions of the thread major diameter,

Copyright ASME International
Provided by IHS under license with ASME
No reproduction or networking permitted without license from IHS
Not for Resale

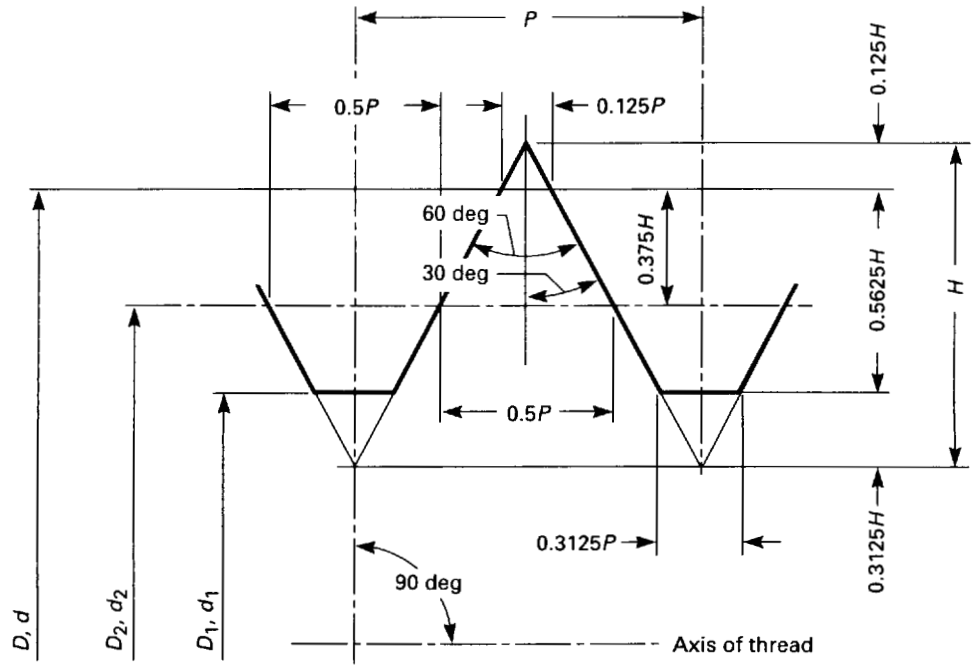

FIG. 1 BASIC PROFILE

pitch diameter, and minor diameter. The profile applies in an axial plane and is shown in Fig. 1.

2.2 Basic Thread Profile Symbols

The symbols used in the basic profile shown in Fig. 1 represent the following:

D bsc = basic major diameter of internal thread
D_2 bsc = basic pitch diameter of internal thread
D_1 bsc = basic minor diameter of internal thread
d bsc = basic major diameter of external thread
d_2 bsc = basic pitch diameter of external thread
d_1 bsc = basic minor diameter of external thread
H = height of fundamental triangle
P = pitch

Appendix B provides a complete list of symbols applicable to the MJ thread form.

2.3 Design Profiles

The design profile for the internal thread at maximum material condition is the same as the basic profile, except in practice, the root is cleared above the basic major diameter, D bsc. See Fig. 2.

The design profile for the external thread at maximum material condition for Tolerance Position h is the basic profile with a radiused minor diameter tangent to the flanks for the upper limit profile. For Tolerance Position g, an allowance is applied to the basic profile. The external thread crest may be flat, partially or corner rounded, tangent to the $0.125P$ flat. See Fig. 3. (Reference also para. 4.2, Tolerance System.)

2.4 Root Radius of the Thread

2.4.1 Internal Thread. For internal threads, the profile of the actual root of the thread shall at no point transgress the basic profile. No root radius is specified.

2.4.2 External Thread. For external threads, the profile of the actual root of the thread shall lie within the root radius tolerance zone shown in Fig. 4. The limit dimensions of the root radius R, as shown in Fig. 4, and their values are specified in Table 1. The profile shall be a continuous smoothly blended non-reversing curve, no part of which shall have a radius of less than $0.15011P$ and which is tangent to the thread flanks at not less than $0.5625H$ basic thread depth. The profile may comprise tangent flank circular arcs that are tangent to the flanks and a flat at the minor diameter provided that the minor diameter, d_3, is within the zone established in Fig. 4.

Copyright ASME International
Provided by IHS under license with ASME
No reproduction or networking permitted without license from IHS Not for Resale

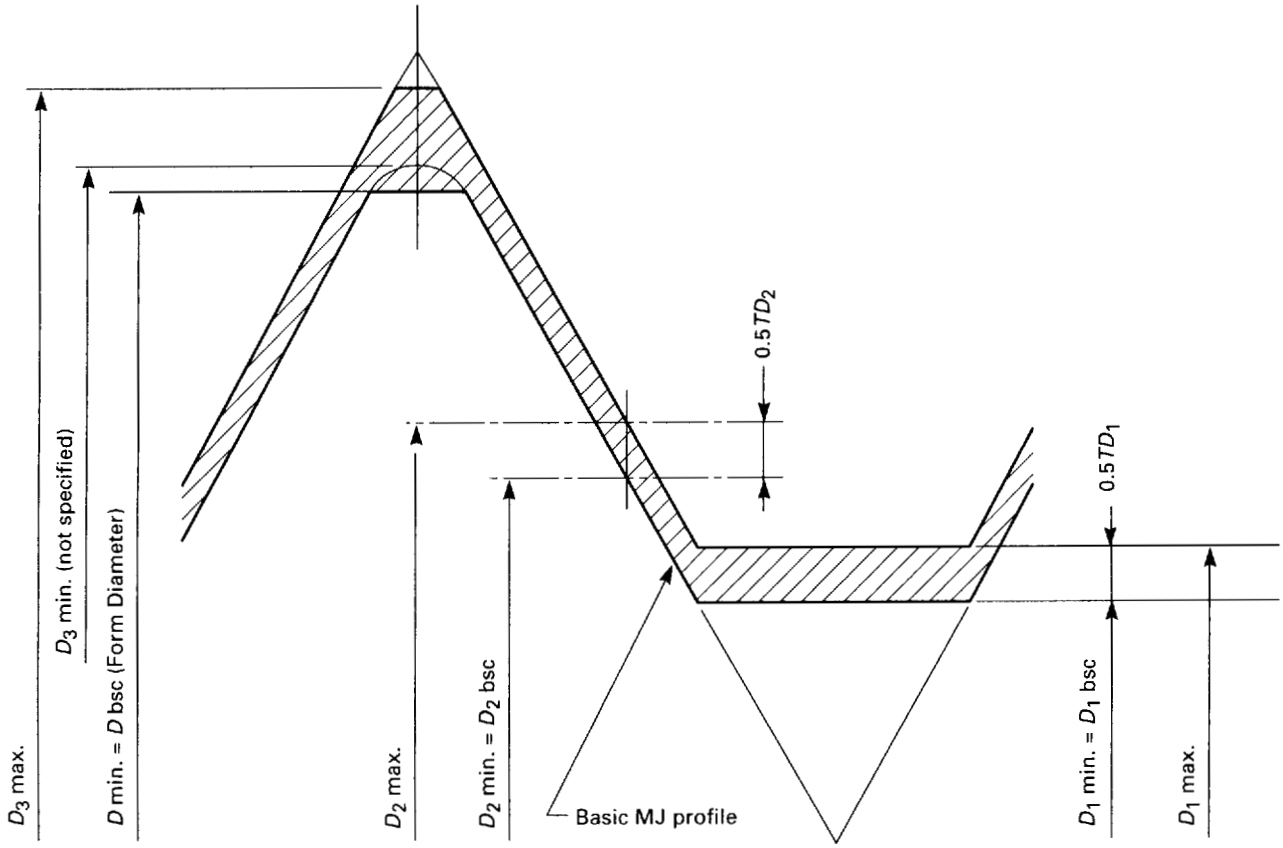

FIG. 2 INTERNAL THREAD TOLERANCES

2.4.3 Incomplete Threads. Unless otherwise specified, the runout threads on externally threaded parts shall be no less than one, nor more than two pitches in length. The threads shall runout onto the shank without any abrupt change in cross-sectional area. The root radius shall be no less than the minimum radius of the full thread section.

3 SERIES OF THREADS

This Standard includes a selected series of threads extracted from ISO 261 plus some additional sizes in the constant pitch series. Also, it includes the standard series of diameter/pitch combinations for aerospace screws, bolts and nuts, aerospace fluid system fittngs, and other preferred screw threads. See Tables 2, 3, 4, and 5.

Table 6 has been added to define the limiting dimensions for Tolerance Classes 6H/6g. A very limited selection of standard sizes has been extracted from ISO 261. This series of threads is identical to that of ASME B1.13M.

4 THREAD CHARACTERISTICS

4.1 Length of Thread Engagement, LE

Tolerances specified in Table 7 are based on a length of engagement of 9 pitches or a length equal to the basic major diameter, whichever is smaller. The actual thread engagement of product threads are normally applicable for lengths of engagement of up to 1.5 diameters for those thread sizes based on one diameter gaging length and up to 15 pitches for those thread sizes based on 9 pitches of gaging length.

For lengths of engagement over 1.5, to and including 3 diameters, or over 15, to and including 30 pitches, the pitch diameter tolerances are 1.25 times the tabulated values. For lengths of engagement over 3 diameters or 30 pitches, the pitch diameter tolerances are 1.5 times

Copyright ASME International
Provided by IHS under license with ASME
No reproduction or networking permitted without license from IHS
Not for Resale

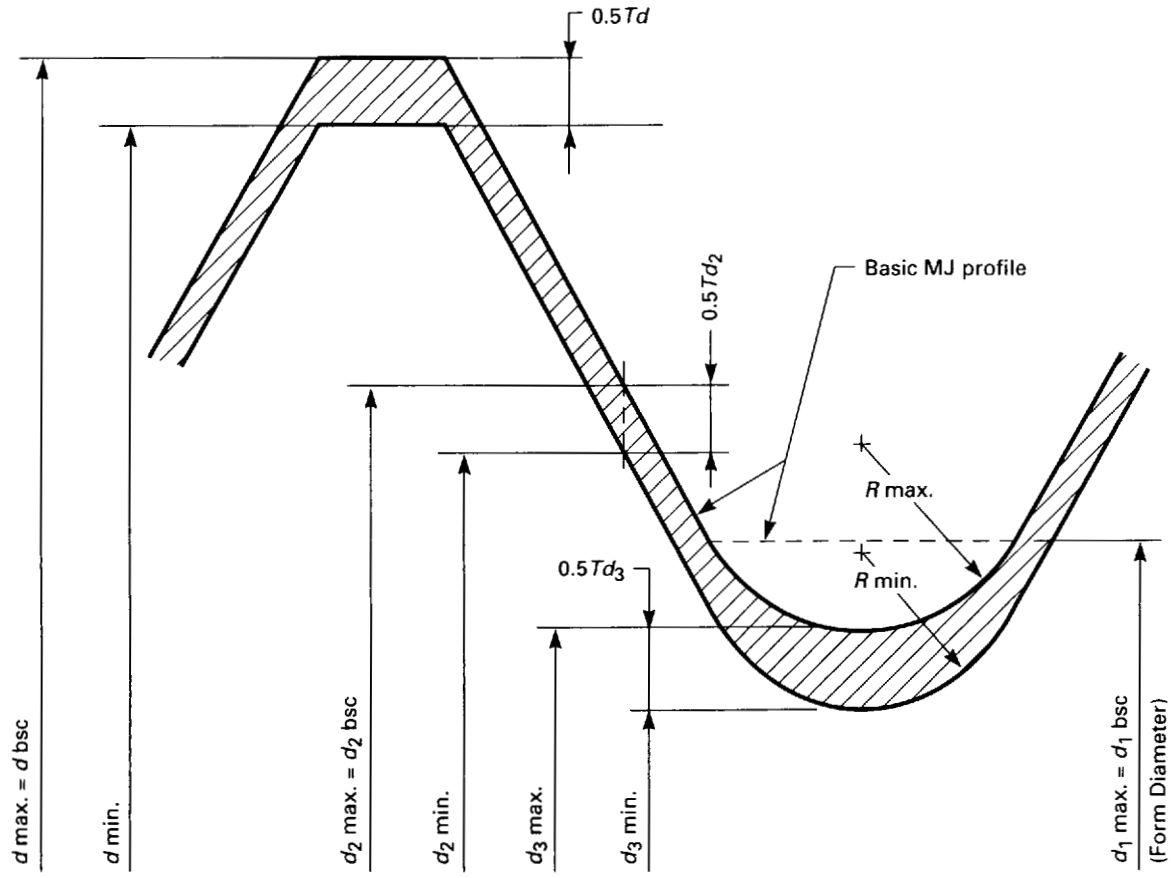

FIG. 3 EXTERNAL THREAD TOLERANCES

the tabulated values. This increased tolerance applies only to one of the engaged members.

In addition to increasing pitch diameter tolerances for long lengths of engagement, maximum material gages (GO) used for acceptance shall be equal in length to the design length of engagement.

4.2 Tolerance System

The thread tolerance system is based on International Standard ISO 965-1, Metric Screw Thread System of Tolerance Positions and Grades. Tolerances and allowances are applied plus for internal threads and minus for external threads.

4.3 Limits of Size

The basic profile dimensions are given in Table 8. The profile dimensions and tolerances (T) shown in Figs. 2 and 3 and their values are specified in Tables 6 and 7. For special threads for which there are no tabulated values, use the formulae in paras. 4.3.1 and 4.3.2.

4.3.1 External Threads, Tolerance Classes 4h6h, 4g6g, and 6g

NOTE: For 4h6h threads, value |es| = 0. |es| is an absolute value.

$$d \text{ max.} = d \text{ bsc} - |es|$$

$$d \text{ min.} = d \text{ max.} - Td(6)$$

where

$$Td(6) = 0.180 \sqrt[3]{P^2} - 0.00315 \frac{1}{\sqrt{P}}$$

(use Table 9 except for special diameter/pitches)

Copyright ASME International
Provided by IHS under license with ASME
No reproduction or networking permitted without license from IHS Not for Resale

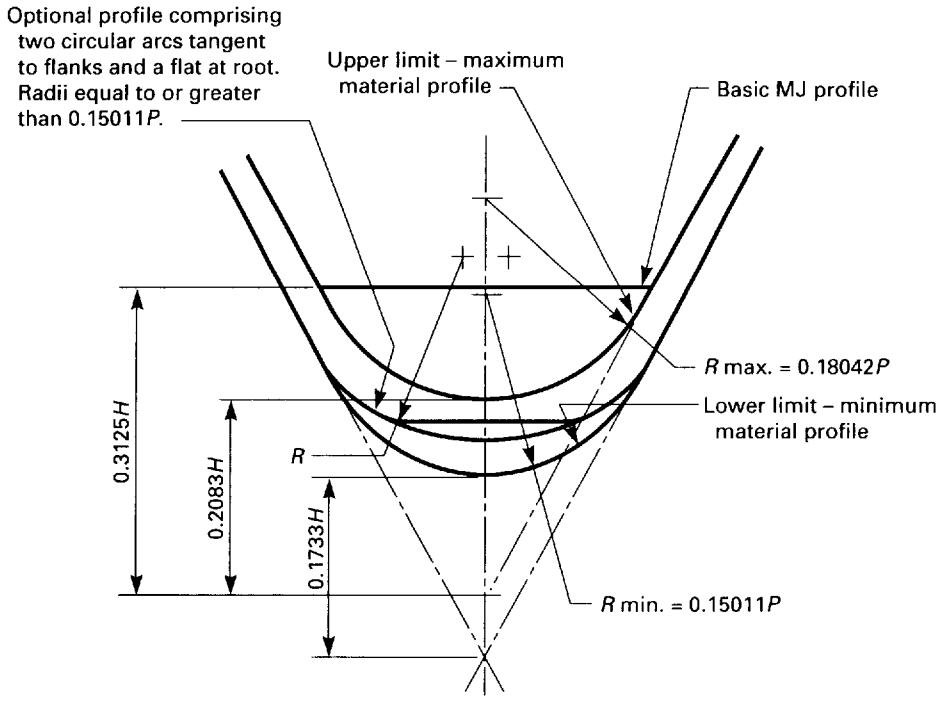

FIG. 4 ROOT RADIUS OF EXTERNAL THREAD

d_2 max. = d max. – 0.6495191P (see Table 8)

d_2 min. = d_2 max. – $Td_2(4)$ for Classes 4h6h and 4g6g
= d_2 max. – $Td_2(6)$ for Class 6g

where

$$Td_2(4) = 0.63 \times 0.090\ P^{0.4}\ d^{0.1}$$
$$Td_2(6) = 0.090\ P^{0.4}\ d^{0.1}$$

(use Table 11 except for special diameter/pitches)

d_3 max. = d_2 max. – 0.5051815P (see Table 8)

d_3 min. = d_2 min. – 0.5658054P (see Table 8)

d_3 min. = d_3 max. – Td_3

R max. = 0.18042P (see Table 1)

R min. = 0.15011P (see Table 1)

4.3.2 Internal Threads, Tolerance Classes 4H5H, 4H6H, 4G5G, 4G6G, and 6H

NOTE: For 4H5H, 4H6H, and 6H threads, value |EI| = 0. |EI| is an absolute value.

D min. = D bsc + |EI|

D max. = D_2 max. + 0.7938566P (see Table 8)

D_2 min. = D min. – 0.6495191P (see Table 8)

D_2 max. = D_2 min. + $TD_2(4)$ for Classes 4H5H, 4H6H, 4G5G, and 4G6G
= D_2 min. + $TD_2(6)$ for Class 6H

where

$$TD_2(4) = 0.85 \times 0.090P^{0.4}\ d^{0.1}$$
$$TD_2(6) = 1.32 \times 0.090P^{0.4}\ d^{0.1}$$

(use Table 11 except for special diameter/pitches)

D_1 min. = D min. – 0.9742786P (see Table 8)

D_1 max. = D_1 min. + $TD_1(6)$ for Classes 4H6H (6 mm and larger sizes)

where

$TD_1(6)$ = $0.433P - 0.190P^{1.22}$ for pitches 0.2 through 0.8 mm

$TD_1(6)$ = $0.230P^{0.7}$ for pitches 1 mm and coarser

(use Table 10 for sizes MJ1.6 through MJ5, except for special diameter/pitches)

Copyright ASME International
Provided by IHS under license with ASME
No reproduction or networking permitted without license from IHS
Not for Resale

D_1 max. = D_1 min. + $TD_1(5)$ for Classes 4H5H and 4G5G and 4G6G

where

$TD_1(5)$ = 0.8 × (0.433P − 0.190$P^{1.22}$) for pitches 0.2 through 0.8 mm

$TD_1(5)$ = 0.8 × (0.230$P^{0.7}$) for pitches 1 mm and coarser

(use Table 10 for sizes MJ6 and larger, except for special diameter/pitches)

D_1 max. = D_1 min. + $TD_1(6)$ for all sizes of Class 6H

where

$TD_1(6)$ = 0.433P − 0.190$P^{1.22}$ for pitches 0.2 through 0.7 mm

$TD_1(6)$ = 0.230$P^{0.7}$ for pitches 1 mm and coarser

(use Table 10)

NOTE: Numbers in parentheses represent the tolerance grade for that particular parameter and are listed for consistency with other documents only. Constants for each tolerance grade have been substituted into the formula for simplicity.

4.4 Thread Form Tolerances

4.4.1 Cumulative Form Variation. Cumulative form variation is the combined effect on functional size of individual thread form variations in lead (pitch), helix, flank angle, taper, and roundness.

When measurement is specified for Tolerance Position H/h threads, cumulative form tolerance shall be 0.5 times pitch diameter tolerance. If not specified, control will be by the required system gages.

4.4.2 Lead and Flank Angle Variations

(a) When individual inspection of lead (including helix) and flank angle variations are required, the allowable variations for these characteristics shall be in accordance with Tables 12 and 13 unless otherwise specified.

(b) For sizes not included in Tables 12 and 13, the allowable lead variation is equal to 0.57735 times one-half (0.5) the pitch diameter tolerance. This is the lead variation which causes a change in functional diameter equal to one-half the pitch diameter tolerance. The allowable flank half-angle variation in minutes of arc is equal to 30 plus 47.625 divided by the pitch rounded to the nearest 5 min for 0.8 pitch and coarser and 62 plus 19.685 divided by the pitch rounded to the nearest 5 min for threads finer than 0.8 pitch.

EXAMPLE:
MJ 13 × 0.9 - 4h6h (22S)
Lead and angle control required.

No lead and angle tolerances were specified, nor do default values appear in Tables 12 and 13. Values are calculated as follows:

Lead tolerance = 0.57735 × 0.5 Td_2
Pitch diameter tolerance Td_2 = 0.070
Lead tolerance = 0.57735 × 0.5 × 0.070 = 0.0202 mm

Angle tolerance (for coarser than P = 0.8) = 30 + 47.625/P
Angle tolerance = 30 + 47.625/0.9 = 82.92 min =
1 deg and 25 min when rounded to nearest 5 min

EXAMPLE:
MJ 3.25 × 0.55 - 4G6G (22S)
Lead and angle control required.
Lead tolerance = 0.57735 × 0.5 TD_2
Pitch diameter tolerance TD_2 = 0.068
Lead tolerance = 0.57735 × 0.5 × 0.068 = 0.0196 mm

Angle tolerance (for finer than P = 0.8) = 62 + 19.685/P
Angle tolerance = 62 + 19.685/0.55 = 97.79 min =
1 deg and 40 min when rounded to nearest 5 min

(c) If lead and angle tolerances are specified as a pitch diameter equivalent in terms of pitch diameter tolerance, tolerances in accordance with para. 4.4.2(a) or 4.4.2(b) may be adjusted proportionately using 0.5 times pitch diameter tolerance as a basis.

EXAMPLE:
MJ 10 × 1.25 - 4g6g (22S)
Lead and angle control required.
Lead tolerance = 0.4 × Td_2
Angle tolerance = 0.3 × Td_2

From Table 12, allowable lead variation is 0.0217 mm. This would be adjusted to 0.4/0.5 times 0.0217 which is 0.0174 mm. From Table 13, allowable angle variation is 1 deg 10 min or 70 min. This would be adjusted to 0.3/0.5 times 70 which is 42 min or 40 min when rounded.

(d) For requirements of (a) and (b) above, lead variation values tabulated or calculated are the maximum variations from specified lead (pitch) between any two points not farther apart than the length of the Maximum Material (GO) thread gage. Flank angle variation values are maximum variations from the basic 30 deg angle between thread flanks and perpendiculars to the thread axis.

(e) Allowable variations in lead and flank angles are maximum values. Maximum variation in these and pitch diameter tolerance cannot be taken simultaneously.

Copyright ASME International
Provided by IHS under license with ASME
No reproduction or networking permitted without license from IHS
Not for Resale

4.4.3 Runout of Major Diameter and Minor Diameter to Pitch Cylinders. When measurement is specified, maximum circular runout shall be limited to a full indicator movement equal to the pitch diameter tolerance.

4.4.4 Taper. If the pitch cylinder is conical, the difference in pitch diameters between the ends of the thread is an indication of taper. When measurement is required, tolerance should be specified. If not specified, then allowable taper is no greater than the pitch diameter tolerance and within the pitch diameter limits of size.

5 DIMENSIONAL ACCOMMODATION OF COATINGS AND PLATINGS

The general rules for calculation of coating allowance are defined in Appendix A. Restrictions in paras. 5.1 through 5.5 also apply.

5.1 Coated External Threads, Tolerance Position h

Coated or plated external threads with a pitch diameter tolerance of 0.090 mm or less may have the pitch diameter limits specified in Table 7 reduced by not more than 0.025 mm. The major and minor diameter limits specified in Table 7 may be reduced by not more than 0.013 mm. When the pitch diameter tolerance exceeds 0.090 mm, the pitch diameter limits may be reduced by 0.3 times the pitch diameter tolerance, but this reduction shall not exceed 0.038 mm. The major and minor diameter limits may be reduced by not more than 0.019 mm. All thread elements shall be within tolerance before coating. Use Tolerance Position g threads where adequate. The threads shall be within the values specified for Tolerance Class 4h6h after coating. Reference also Appendix A, Coating of Threads.

5.2 Coating Threads With Dry Film Lubricant

Threads to be coated with a dry film lubricant may have the standard coating allowance applied as specified in paras. 5.1 and 5.4. If the standard coating allowance is utilized, the threads shall conform to the specified limits of size after coating. If another coating is applied before dry film lubricant, no allowance shall be allowed to accommodate the dry film lubricant, and inspection should be accomplished before coating.

5.3 Coated External Threads, Tolerance Position g

Except where otherwise specified, the external thread material limits may not be reduced beyond the minimum material limits to accommodate coating. After coating, the threads shall be no larger than Tolerance Position h material limits specified in Table 7 or g limits where specified.

5.4 Coated Internal Threads, Tolerance Position H

For coated or plated internal threads, the maximum values of minor diameter and pitch diameter specified in Table 7 may be increased by the same amount permitted in para. 5.1 for external thread decrease. The limits for coated or plated internal threads shall be within the values specified in Table 7. Use Tolerance Position G threads where adequate.

5.5 Coated Internal Threads, Tolerance Position G

Except where otherwise specified, the internal thread material limits may not be increased beyond the maximum size limits to accomodate coating. After coating, the threads shall be no smaller than Tolerance Position H material limits specified in Table 7 or G limits where specified.

6 DESIGNATION OF THREADS

6.1 Basic Designation

The metric screw thread described in this Standard is designated by the letters "MJ" to identify the metric J Thread Form.

6.2 Standard Thread Series Designation

Standard threads shall be designated by the letters MJ followed by the nominal size and the pitch in millimeters (separated by the sign "×") and followed by the tolerance class (separated by a dash from the pitch). The gaging system designator depicted in the examples may be designated at each thread call-out as shown or as a general note on the drawing, specification sheet, or applicable document.

Copyright ASME International
Provided by IHS under license with ASME
No reproduction or networking permitted without license from IHS
Not for Resale

6.2.1 Examples

EXAMPLE: External Thread, Right Hand:

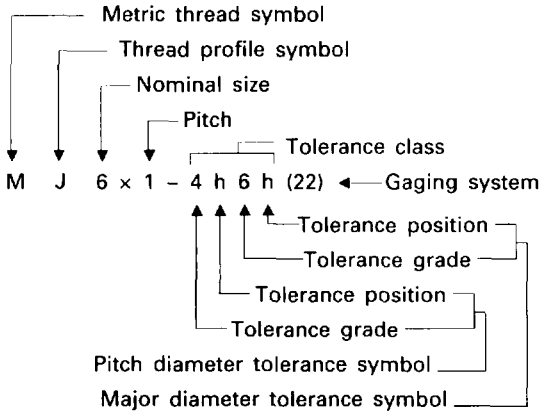

EXAMPLE: Internal Thread, Right Hand:

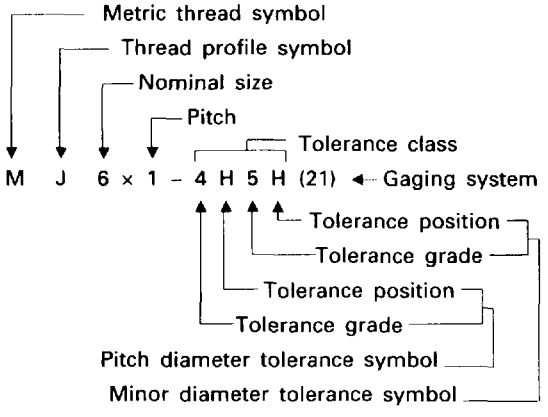

EXAMPLE: External Thread, Left Hand (LH)
MJ6 × 1 - 4h6h - LH (22)

EXAMPLE: External Thread — Cumulative Form Control
MJ10 × 1.25 - 4h6h (22S)
Cumulative Form Variation 0.5 × Td_2

EXAMPLE: External Thread — Angle and Lead Control
MJ12 × 1 - 4h6h (22S)
Lead and angle control required.

EXAMPLE: Internal Thread — Runout Control
MJ8 × 0.75 - 4H5H (21S)
Runout Variations 0.5 × TD_2

6.3 Designation of Coated Threads

Coated threads shall be designated by only the standard thread designation where the coating allowances given in Section 5 are adequate relief for the applied coating. Unless otherwise specified, threaded parts to be coated shall have the standard coating allowances specified in para. 5.1 for external threads and para. 5.4 for internal threads. The thread limits shall be within tolerance, as modified by the coating allowance, before coating. After coating, the material limits in Table 7 for standard MJ thread shall apply for Tolerance Position H/h threads. For Tolerance Position G/g threads, limits shall not be less than minimum H limits for internal threads nor more than maximum h limits for external threads.

6.4 Designation of Threads Having Modified Crests

Where the limits of size of the major diameter of an external thread or the minor diameter of an internal thread are modified, the thread designation is suffixed by the letters MOD followed by the modified diameter limits.

EXAMPLES:
External Thread — Major Diameter Reduced 0.075 mm
MJ6 × 1 - 4h6h MOD (22)
MAJOR DIAMETER 5.745 – 5.925 MOD

Internal Thread — Minor Diameter Increased 0.075 mm
MJ6 × 1 - 4H5H MOD (21)
MINOR DIAMETER 5.101 – 5.291 MOD

6.5 Designation of Threads Having Special Length Requirements

(a) Where a standard series thread has a special length of engagement differing from that for which the standard pitch diameter tolerances are applicable, the thread class symbol is suffixed by the letters SE (Special Engagement) followed by the special pitch diameter limits of size and the length of engagement (LE).

EXAMPLE:
Assembly and GO Gage Length 3 Times Standard
MJ6 × 1 - 4h6h SE (22)
PITCH DIAMETER 5.256 – 5.350
LE 18

(b) Where a long length of engagement is required and special length GO gages are to be used but the standard tolerances per Table 7 are required, the thread class symbol with the SPL (Special) suffix and the length of engagement, LE, shall be used as designated.

Copyright ASME International
Provided by IHS under license with ASME
No reproduction or networking permitted without license from IHS
Not for Resale

STD.ASME B1.21M-ENGL 1997 ■ 0759670 0589905 752 ■

EXAMPLE:
Assembly and GO Gage Length 2 Times Standard (but normal size limits required)
MJ8 × 1.25 - 4H5H SPL (22)
LE 16

6.6 Designation of Special Series Threads

Special diameter/pitch threads developed in accordance with this Standard shall be identified by the letters "MJS" for the thread series symbol in the thread designation. Below the designation, the major diameter, pitch diameter, minor diameter for internal thread, and the minor diameter and root radius of external thread shall be specified. Dimensions for threads of special diameter/pitch combinations shall be computed by using the formulae given in paras. 4.3.1 and 4.3.2.

EXAMPLES:
External Thread
MJS 6.5 × 1 - 4h6h (22)
MAJOR DIAMETER 6.320 – 6.500
PITCH DIAMETER 5.779 – 5.850
MINOR DIAMETER 5.213 – 5.345
ROOT RADIUS 0.150 min.

Internal Thread
MJS 6.5 × 1 - 4H5H (21)
MAJOR DIAMETER 6.500 min.
PITCH DIAMETER 5.850 – 5.945
MINOR DIAMETER 5.526 – 5.716

7 ACCEPTABILITY

Acceptability of product threads shall be in accordance with ASME B1.3M, with the gaging system designated at each thread call-out or on applicable document. See also para. 6.2.

ANSI/ASME B1.22M provides the specifications and dimensions for the gages used on metric screw threads, MJ Profile. The basic purpose and use of each gage are also described in that standard.

Copyright ASME International
Provided by IHS under license with ASME
No reproduction or networking permitted without license from IHS
Not for Resale

TABLE 1 LIMIT VALUES, EXTERNAL THREAD ROOT RADIUS, *R* (mm)

	Root Radius, *R*	
Pitch, *P*	Min. 0.15011*P*	Max. 0.18042*P*
0.35	0.053	0.063
0.4	0.060	0.072
0.45	0.068	0.081
0.5	0.075	0.090
0.6	0.090	0.108
0.7	0.105	0.126
0.75	0.113	0.135
0.8	0.120	0.144
1	0.150	0.180
1.25	0.188	0.225
1.5	0.225	0.271
1.75	0.263	0.316
2	0.300	0.361
2.5	0.375	0.451
3	0.450	0.541
3.5	0.525	0.631
4	0.600	0.722
4.5	0.675	0.812
5	0.751	0.902
5.5	0.826	0.992
6	0.901	1.083

Copyright ASME International
Provided by IHS under license with ASME
No reproduction or networking permitted without license from IHS Not for Resale

TABLE 2 METRIC J SCREW THREAD STANDARD SERIES, mm

Nominal Diameters		Pitches							Nominal Diameters		Pitches			
			Fine									Fine		
Col. 1 1st Choice	Col. 2 2nd Choice	Coarse	3	2	1.5	1.25	1	0.75	Col. 1 1st Choice	Col. 2 2nd Choice	Coarse	3	2	1.5
1.6	...	0.35	...	...	...	...	...	...	50	...	...	3	2	1.5
...	1.8	0.35	...	...	...	...	...	...	...	52	...	3	2	1.5
2	...	0.4	...	...	...	...	...	...	55	...	...	3	2	1.5
...	2.2	0.45	...	...	...	...	...	...	...	56	5.5	3	2	1.5
2.5	...	0.45	...	...	...	...	...	...	...	58	...	3	2	1.5
3	...	0.5	...	...	...	...	...	...	60	...	...	3	2	1.5
3.5	...	0.6	...	...	...	...	...	...	...	62	...	3	2	1.5
4	...	0.7	...	...	...	...	...	...	...	64	6	3	2	1.5
...	4.5	0.75	...	...	...	...	...	...	65	...	...	3	2	1.5
5	...	0.8	...	...	...	...	...	...	...	68	...	3	2	1.5
6	...	1	...	...	...	...	...	0.75	70	...	...	3	2	1.5
7	...	1	...	...	...	...	...	0.75	...	72	6	3	2	1.5
8	...	1.25	...	...	...	...	1	0.75	75	...	...	3	2	1.5
...	9	1.25	...	...	...	...	1	0.75	...	76	...	3	2	1.5
10	...	1.5	...	...	...	1.25	1	0.75	...	78	...	(3)	2	(1.5)
...	11	1.5	...	...	...	1.25 [Note (1)]	1	0.75	80	...	6	3	2	1.5
12	...	1.75	...	...	1.5	1.25	1	...	...	82	...	(3)	2	1.5
14	...	2	...	...	1.5	1.25 [Note (2)]	1	...	85	...	...	3	2	1.5
...	15	...	...	...	1.5	...	1	...	90	...	6	3	2	1.5
16	...	2	...	...	1.5	...	1	...	95	...	...	3	2	1.5
...	17	...	...	...	1.5	...	1	...	100	...	6	3	2	1.5
18	...	2.5	...	2	1.5	...	1	...	105	...	...	3	2	1.5
20	...	2.5	...	2	1.5	...	1	...	110	...	...	3	2	1.5
22	...	2.5	...	2	1.5	...	1	...	...	115	...	3	2	1.5
24	...	3	...	2	1.5	...	1	...	120	...	...	3	2	1.5
...	25	...	...	2	1.5	...	1	...	...	125	...	3	2	1.5
...	26	...	...	...	1.5	...	...	...	130	...	...	3	2	1.5
27	...	3	...	2	1.5	...	1	...	...	135	...	3	2	1.5
...	28	...	...	2	1.5	...	1	...	140	...	...	3	2	1.5
30	...	3.5	3	2	1.5	...	1	...	...	145	...	3	2	1.5
...	32	...	...	2	1.5	...	...	...	150	...	...	3	2	(1.5)
33	...	...	3	2	1.5	...	...	...	...	155	...	3	...	...
...	35	...	...	...	1.5	...	...	...	160	...	...	3	...	...
36	...	4	3	2	1.5	...	...	...	...	165	...	3	...	...
...	38	...	...	...	1.5	...	...	...	170	...	...	3	...	...

Copyright ASME International
Provided by IHS under license with ASME
No reproduction or networking permitted without license from IHS
Not for Resale

TABLE 2 METRIC J SCREW THREAD STANDARD SERIES, mm (CONT'D)

Nominal Diameters		Pitches							Nominal Diameters		Pitches			
			Fine									Fine		
Col. 1 1st Choice	Col. 2 2nd Choice	Coarse	3	2	1.5	1.25	1	0.75	Col. 1 1st Choice	Col. 2 2nd Choice	Coarse	3	2	1.5
39	...	...	3	2	1.5	...	...	...	...	175	...	3	...	...
...	40	...	3	2	1.5	...	...	...	180	...	...	3	...	...
...	42	4.5	3	2	1.5	...	...	...	...	185	...	3	...	...
45	...	...	3	2	1.5	...	...	...	190	...	...	3	...	...
...	48	5	3	2	1.5	...	...	...	...	195	...	3	...	...
...	...	...	...	...	...	...	...	...	200	...	...	3	...	...

GENERAL NOTES:

(a) Choose, for preference, diameters in Col. 1 of Table 2 and, if necessary, in Col. 2.

(b) Encircled pitches are not listed in ISO 261.

NOTES:

(1) Only for aircraft control cable fittings.

(2) Only for spark plugs for engines.

Copyright ASME International
Provided by IHS under license with ASME
No reproduction or networking permitted without license from IHS
Not for Resale

TABLE 3 STANDARD SERIES FOR AEROSPACE SCREWS, BOLTS, AND NUTS

Nominal Size, mm	Pitch, mm
1.6	0.35
2	0.4
2.5	0.45
3	0.5
3.5	0.6
4	0.7
5	0.8
6	1
7	1
8	1
10	1.25
12	1.25
14	1.5
16	1.5
18	1.5
20	1.5
22	1.5
24	2
27	2
30	2
33	2
36	2
39	2

GENERAL NOTE: For threads smaller than 1.6 nominal size, use miniature screw threads (ASME B1.10M).

TABLE 4 STANDARD SERIES FOR AEROSPACE FLUID SYSTEM FITTINGS

Nominal Size, mm	Pitch, mm
8	1
10	1
12	1.25
14	1.5
16	1.5
18	1.5
20	1.5
22	1.5
24	1.5
27	1.5
30	1.5
33	1.5
36	1.5
39	1.5
42	2
48	2
50	2

Copyright ASME International
Provided by IHS under license with ASME
No reproduction or networking permitted without license from IHS
Not for Resale

TABLE 5 OTHER STANDARD SERIES PREFERRED SCREW THREADS

Nominal Size, mm	Coarse Pitch, mm	Fine Pitch, mm
8	1.25	...
10	1.5	0.75
11	...	1.25 [Note (1)]
12	1.75	1
14	2	...
15	...	1
17	...	1
20	2.5	1
24	3	...
25	...	1.5
30	3.5	...
35	...	1.5
36	4	...
40	...	1.5
42	4.5	...
45	...	1.5
48	5	...
50	...	1.5
55	...	1.5
56	5.5	2
60	...	1.5
64	6	2
65	...	1.5
70	...	1.5
72	6	2
75	...	1.5
80	6	2, 1.5
85	...	2
90	6	2
95	...	2
100	6	2
105	...	2
110	...	2
120	...	2
130	...	2
140	...	2
150	...	2
160	...	3
170	...	3
180	...	3
190	...	3
200	...	3

NOTE:
(1) Only for aircraft control cable fittings.

Copyright ASME International
Provided by IHS under license with ASME
No reproduction or networking permitted without license from IHS
Not for Resale

TABLE 6 LIMITING DIMENSIONS OF METRIC J SCREW THREAD SERIES FOR TOLERANCE CLASS 6H/6g, mm

		External Threads						
Basic Thread Designation	Tolerance Class	Major Diameter, d		Pitch Diameter, d_2			Minor Diameter, d_3	
		Max.	Min.	Max.	Min.	Tolerance	Max.	Min.
MJ1.6 × 0.35	6g	1.581	1.496	1.354	1.291	0.063	1.177	1.093
MJ2 × 0.4	6g	1.981	1.886	1.721	1.654	0.067	1.519	1.428
MJ2.5 × 0.45	6g	2.480	2.380	2.188	2.117	0.071	1.960	1.862
MJ3 × 0.5	6g	2.980	2.874	2.655	2.580	0.075	2.403	2.297
MJ3.5 × 0.6	6g	3.479	3.354	3.089	3.004	0.085	2.786	2.665
MJ4 × 0.7	6g	3.978	3.838	3.523	3.433	0.090	3.170	3.037
MJ5 × 0.8	6g	4.976	4.826	4.456	4.361	0.095	4.052	3.909
MJ6 × 1	6g	5.974	5.794	5.324	5.212	0.112	4.819	4.647
MJ8 × 1.25	6g	7.972	7.760	7.160	7.042	0.118	6.529	6.335
MJ8 × 1	6g	7.974	7.794	7.324	7.212	0.112	6.819	6.647
MJ10 × 1.5	6g	9.968	9.732	8.994	8.862	0.132	8.236	8.013
MJ10 × 1.25	6g	9.972	9.760	9.160	9.042	0.118	8.529	8.335
MJ10 × 1	6g	9.974	9.794	9.324	9.212	0.112	8.819	8.647
MJ10 × 0.75	6g	9.978	9.838	9.491	9.391	0.100	9.112	8.967
MJ12 × 1.75	6g	11.966	11.701	10.829	10.679	0.150	9.945	9.689
MJ12 × 1.5	6g	11.968	11.732	10.994	10.854	0.140	10.236	10.005
MJ12 × 1.25	6g	11.972	11.760	11.160	11.028	0.132	10.529	10.321
MJ12 × 1	6g	11.974	11.794	11.324	11.206	0.118	10.819	10.641
MJ14 × 2	6g	13.962	13.682	12.663	12.503	0.160	11.653	11.371
MJ14 × 1.5	6g	13.968	13.732	12.994	12.854	0.140	12.236	12.005
MJ15 × 1	6g	14.974	14.794	14.324	14.206	0.118	13.819	13.641
MJ16 × 2	6g	15.962	15.682	14.663	14.503	0.160	13.653	13.371
MJ16 × 1.5	6g	15.968	15.732	14.994	14.854	0.140	14.236	14.005
MJ17 × 1	6g	16.974	16.794	16.324	16.206	0.118	15.819	15.641
MJ18 × 1.5	6g	17.968	17.732	16.994	16.854	0.140	16.236	16.005
MJ20 × 2.5	6g	19.958	19.623	18.334	18.164	0.170	17.071	16.750
MJ20 × 1.5	6g	19.968	19.732	18.994	18.854	0.140	18.236	18.005
MJ20 × 1	6g	19.974	19.794	19.324	19.206	0.118	18.819	18.641
MJ22 × 2.5	6g	21.958	21.623	20.334	20.164	0.170	19.071	18.750
MJ22 × 1.5	6g	21.968	21.732	20.994	20.854	0.140	20.236	20.005
MJ24 × 3	6g	23.952	23.577	22.003	21.803	0.200	20.488	20.106
MJ24 × 2	6g	23.962	23.682	22.663	22.493	0.170	21.653	21.361
MJ25 × 1.5	6g	24.968	24.732	23.994	23.844	0.150	23.236	22.995
MJ27 × 3	6g	26.952	26.577	25.003	24.803	0.200	23.488	23.106
MJ27 × 2	6g	26.962	26.682	25.663	25.493	0.170	24.653	24.361
MJ30 × 3.5	6g	29.947	29.522	27.674	27.462	0.212	25.906	25.481
MJ30 × 2	6g	29.962	29.682	28.663	28.493	0.170	27.653	27.361
MJ30 × 1.5	6g	29.968	29.732	28.994	28.844	0.150	28.236	27.995
MJ33 × 2	6g	32.962	32.682	31.663	31.493	0.170	30.653	30.361
MJ35 × 1.5	6g	34.968	34.732	33.994	33.844	0.150	33.236	32.995

Copyright ASME International
Provided by IHS under license with ASME
No reproduction or networking permitted without license from IHS
Not for Resale

TABLE 6 LIMITING DIMENSIONS OF METRIC J SCREW THREAD SERIES FOR TOLERANCE CLASS 6H/6g, mm

Internal Threads								
Basic Thread Designation	Tolerance Class	Minor Diameter, D_1		Pitch Diameter, D_2			Major Diameter, D	
		Min.	Max.	Min.	Max.	Tolerance	Min.	Max.[1]
MJ1.6 × 0.35	6H	1.259	1.359	1.373	1.458	0.085	1.600	1.736
MJ2 × 0.4	6H	1.610	1.722	1.740	1.830	0.090	2.000	2.148
MJ2.5 × 0.45	6H	2.062	2.187	2.208	2.303	0.095	2.500	2.660
MJ3 × 0.5	6H	2.513	2.653	2.675	2.775	0.100	3.000	3.172
MJ3.5 × 0.6	6H	2.915	3.075	3.110	3.222	0.112	3.500	3.698
MJ4 × 0.7	6H	3.318	3.498	3.545	3.663	0.118	4.000	4.219
MJ5 × 0.8	6H	4.221	4.421	4.480	4.605	0.125	5.000	5.240
MJ6 × 1	6H	5.026	5.262	5.350	5.500	0.150	6.000	6.294
MJ8 × 1.25	6H	6.782	7.047	7.188	7.348	0.160	8.000	8.340
MJ8 × 1	6H	7.026	7.262	7.350	7.500	0.150	8.000	8.294
MJ10 × 1.5	6H	8.539	8.839	9.026	9.206	0.180	10.000	10.397
MJ10 × 1.25	6H	8.782	9.047	9.188	9.348	0.160	10.000	10.340
MJ10 × 1	6H	9.026	9.262	9.350	9.500	0.150	10.000	10.294
MJ10 × 0.75	6H	9.269	9.459	9.513	9.645	0.132	10.000	10.240
MJ12 × 1.75	6H	10.295	10.630	10.863	11.063	0.200	12.000	12.452
MJ12 × 1.5	6H	10.539	10.839	11.026	11.216	0.190	12.000	12.407
MJ12 × 1.25	6H	10.782	11.047	11.188	11.368	0.180	12.000	12.360
MJ12 × 1	6H	11.026	11.262	11.350	11.510	0.160	12.000	12.304
MJ14 × 2	6H	12.051	12.426	12.701	12.913	0.212	14.000	14.501
MJ14 × 1.5	6H	12.539	12.839	13.026	13.216	0.190	14.000	14.407
MJ15 × 1	6H	14.026	14.262	14.350	14.510	0.160	15.000	15.304
MJ16 × 2	6H	14.051	14.426	14.701	14.913	0.212	16.000	16.501
MJ16 × 1.5	6H	14.539	14.839	15.026	15.216	0.190	16.000	16.407
MJ17 × 1	6H	16.026	16.262	16.350	16.510	0.160	17.000	17.304
MJ18 × 1.5	6H	16.539	16.839	17.026	17.216	0.190	18.000	18.407
MJ20 × 2.5	6H	17.564	18.014	18.376	18.600	0.224	20.000	20.585
MJ20 × 1.5	6H	18.539	18.839	19.026	19.216	0.190	20.000	20.407
MJ20 × 1	6H	19.026	19.262	19.350	19.510	0.160	20.000	20.304
MJ22 × 2.5	6H	19.564	20.014	20.376	20.600	0.224	22.000	22.585
MJ22 × 1.5	6H	20.539	20.839	21.026	21.216	0.190	22.000	22.407
MJ24 × 3	6H	21.077	21.577	22.051	22.316	0.265	24.000	24.698
MJ24 × 2	6H	22.051	22.426	22.701	22.925	0.224	24.000	24.513
MJ25 × 1.5	6H	23.539	23.839	24.026	24.226	0.200	25.000	25.417
MJ27 × 3	6H	24.077	24.577	25.051	25.316	0.265	27.000	27.698
MJ27 × 2	6H	25.051	25.426	25.701	25.925	0.224	27.000	27.513
MJ30 × 3.5	6H	26.590	27.150	27.727	28.007	0.280	30.000	30.785
MJ30 × 2	6H	28.051	28.426	28.701	28.925	0.224	30.000	30.513
MJ30 × 1.5	6H	28.539	28.839	29.026	29.226	0.200	30.000	30.417
MJ33 × 2	6H	31.051	31.426	31.701	31.925	0.224	33.000	33.513
MJ35 × 1.5	6H	33.539	33.839	34.026	34.226	0.200	35.000	35.417

(Notes follow at end of table)

Copyright ASME International
Provided by IHS under license with ASME
No reproduction or networking permitted without license from IHS
Not for Resale

TABLE 6 LIMITING DIMENSIONS OF METRIC J SCREW THREAD SERIES FOR TOLERANCE CLASS 6H/6g, mm (CONT'D)

External Threads								
Basic Thread Designation	Tolerance Class	Major Diameter, d		Pitch Diameter, d_2			Minor Diameter, d_3	
		Max.	Min.	Max.	Min.	Tolerance	Max.	Min.
MJ36 × 4	6g	35.940	35.465	33.342	33.118	0.224	31.321	30.855
MJ36 × 2	6g	35.962	35.682	34.663	34.493	0.170	33.653	33.361
MJ39 × 2	6g	38.962	38.682	37.663	37.493	0.170	36.653	36.361
MJ40 × 1.5	6g	39.968	39.732	38.994	38.844	0.150	38.236	37.995
MJ42 × 4.5	6g	41.937	41.437	39.014	38.778	0.236	36.741	36.232
MJ42 × 2	6g	41.962	41.682	40.663	40.493	0.170	39.653	39.361
MJ45 × 1.5	6g	44.968	44.732	43.994	43.844	0.150	43.236	42.995
MJ48 × 5	6g	47.929	47.399	44.681	44.431	0.250	42.155	41.602
MJ48 × 2	6g	47.962	47.682	46.663	46.483	0.180	45.653	45.351
MJ50 × 1.5	6g	49.968	49.732	48.994	48.834	0.160	48.236	47.985
MJ55 × 1.5	6g	54.968	54.732	53.994	53.834	0.160	53.236	52.985
MJ56 × 5.5	6g	55.925	55.365	52.353	52.088	0.265	49.574	48.976
MJ56 × 2	6g	55.962	55.682	54.663	54.483	0.180	53.653	53.351
MJ60 × 1.5	6g	59.968	59.732	58.994	58.834	0.160	58.236	57.985
MJ64 × 6	6g	63.920	63.320	60.023	59.743	0.280	56.992	56.348
MJ64 × 2	6g	63.962	63.682	62.663	62.483	0.180	61.653	61.351
MJ65 × 1.5	6g	64.968	64.732	63.994	63.834	0.160	63.236	62.985
MJ70 × 1.5	6g	69.968	69.732	68.994	68.834	0.160	68.236	67.985
MJ72 × 6	6g	71.920	71.320	68.023	67.743	0.280	64.992	64.348
MJ72 × 2	6g	71.962	71.682	70.663	70.483	0.180	69.653	69.351
MJ75 × 1.5	6g	74.968	74.732	73.994	73.834	0.160	73.236	72.985
MJ80 × 6	6g	79.920	79.320	76.023	75.743	0.280	72.992	72.348
MJ80 × 2	6g	79.962	79.682	78.663	78.483	0.180	77.653	77.351
MJ80 × 1.5	6g	79.968	79.732	78.994	78.834	0.160	78.236	77.985
MJ85 × 2	6g	84.962	84.682	83.663	83.483	0.180	82.653	82.351
MJ90 × 6	6g	89.920	89.320	86.023	85.743	0.280	82.992	82.348
MJ90 × 2	6g	89.962	89.682	88.663	88.483	0.180	87.653	87.351
MJ95 × 2	6g	94.962	94.682	93.663	93.473	0.190	92.653	92.341
MJ100 × 6	6g	99.920	99.320	96.023	95.723	0.300	92.992	92.328
MJ100 × 2	6g	99.962	99.682	98.663	98.473	0.190	97.653	97.341
MJ105 × 2	6g	104.962	104.682	103.663	103.473	0.190	102.653	102.341
MJ110 × 2	6g	109.962	109.682	108.663	108.473	0.190	107.653	107.341
MJ120 × 2	6g	119.962	119.682	118.663	118.473	0.190	117.653	117.341
MJ130 × 2	6g	129.962	129.682	128.663	128.473	0.190	127.653	127.341
MJ140 × 2	6g	139.962	139.682	138.663	138.473	0.190	137.653	137.341
MJ150 × 2	6g	149.962	149.682	148.663	148.473	0.190	147.653	147.341
MJ160 × 3	6g	159.952	159.577	158.003	157.779	0.224	156.488	156.082
MJ170 × 3	6g	169.952	169.577	168.003	167.779	0.224	166.488	166.082
MJ180 × 3	6g	179.952	179.577	178.003	177.779	0.224	176.488	176.082
MJ190 × 3	6g	189.952	189.577	188.003	187.753	0.250	186.488	186.056
MJ200 × 3	6g	199.952	199.577	198.003	197.753	0.250	196.488	196.056

Copyright ASME International
Provided by IHS under license with ASME
No reproduction or networking permitted without license from IHS
Not for Resale

TABLE 6 LIMITING DIMENSIONS OF METRIC J SCREW THREAD SERIES FOR TOLERANCE CLASS 6H/6g, mm (CONT'D)

Internal Threads								
Basic Thread Designation	Tolerance Class	Minor Diameter, D_1		Pitch Diameter, D_2			Major Diameter, D	
		Min.	Max.	Min.	Max.	Tolerance	Min.	Max.[1]
MJ36 × 4	6H	32.103	32.703	33.402	33.702	0.300	36.000	36.877
MJ36 × 2	6H	34.051	34.426	34.701	34.925	0.224	36.000	36.513
MJ39 × 2	6H	37.051	37.426	37.701	37.925	0.224	39.000	39.513
MJ40 × 1.5	6H	38.539	38.839	39.026	39.226	0.200	40.000	40.417
MJ42 × 4.5	6H	37.616	38.286	39.077	39.392	0.315	42.000	42.964
MJ42 × 2	6H	40.051	40.426	40.701	40.925	0.224	42.000	42.513
MJ45 × 1.5	6H	43.539	43.839	44.026	44.226	0.200	45.000	45.417
MJ48 × 5	6H	43.129	43.839	44.752	45.087	0.335	48.000	49.056
MJ48 × 2	6H	46.051	46.426	46.701	46.937	0.236	48.000	48.525
MJ50 × 1.5	6H	48.539	48.839	49.026	49.238	0.212	50.000	50.429
MJ55 × 1.5	6H	53.539	53.839	54.026	54.238	0.212	55.000	55.429
MJ56 × 5.5	6H	50.641	51.391	52.428	52.783	0.355	56.000	57.149
MJ56 × 2	6H	54.051	54.426	54.701	54.937	0.236	56.000	56.525
MJ60 × 1.5	6H	58.539	58.839	59.026	59.238	0.212	60.000	60.429
MJ64 × 6	6H	58.154	58.954	60.103	60.478	0.375	64.000	65.241
MJ64 × 2	6H	62.051	62.426	62.701	62.937	0.236	64.000	64.525
MJ65 × 1.5	6H	63.539	63.839	64.026	64.238	0.212	65.000	65.429
MJ70 × 1.5	6H	68.539	68.839	69.026	69.238	0.212	70.000	70.429
MJ72 × 6	6H	66.154	66.954	68.103	68.478	0.375	72.000	73.241
MJ72 × 2	6H	70.051	70.426	70.701	70.937	0.236	72.000	72.525
MJ75 × 1.5	6H	73.539	73.839	74.026	74.238	0.212	75.000	75.429
MJ80 × 6	6H	74.154	74.954	76.103	76.478	0.375	80.000	81.241
MJ80 × 2	6H	78.051	78.426	78.701	78.937	0.236	80.000	80.525
MJ80 × 1.5	6H	78.539	78.839	79.026	79.238	0.212	80.000	80.429
MJ85 × 2	6H	83.051	83.426	83.701	83.937	0.236	85.000	85.525
MJ90 × 6	6H	84.154	84.954	86.103	86.478	0.375	90.000	91.241
MJ90 × 2	6H	88.051	88.426	88.701	88.937	0.236	90.000	90.525
MJ95 × 2	6H	93.051	93.426	93.701	93.951	0.250	95.000	95.539
MJ100 × 6	6H	94.154	94.954	96.103	96.503	0.400	100.000	101.266
MJ100 × 2	6H	98.051	98.426	98.701	98.951	0.250	100.000	100.539
MJ105 × 2	6H	103.051	103.426	103.701	103.951	0.250	105.000	105.539
MJ110 × 2	6H	108.051	108.426	108.701	108.951	0.250	110.000	110.539
MJ120 × 2	6H	118.051	118.426	118.701	118.951	0.250	120.000	120.539
MJ130 × 2	6H	128.051	128.426	128.701	128.951	0.250	130.000	130.539
MJ140 × 2	6H	138.051	138.426	138.701	138.951	0.250	140.000	140.539
MJ150 × 2	6H	148.051	148.426	148.701	148.951	0.250	150.000	150.539
MJ160 × 3	6H	157.077	157.577	158.051	158.351	0.300	160.000	160.733
MJ170 × 3	6H	167.077	167.577	168.051	168.351	0.300	170.000	170.733
MJ180 × 3	6H	177.077	177.577	178.051	178.351	0.300	180.000	180.733
MJ190 × 3	6H	187.077	187.577	188.051	188.386	0.335	190.000	190.768
MJ200 × 3	6H	197.077	197.577	198.051	198.386	0.335	200.000	200.768

GENERAL NOTE: For Tolerance Position h maximum material limits, use maximum diameters for Class 4h6h in Table 7.

NOTE:

(1) For reference use. Dimension is used in the design of tools, etc. In dimensioning internal threads, it is not normally specified. Generally, major diameter acceptance is based on maximum material condition gaging.

Copyright ASME International
Provided by IHS under license with ASME
No reproduction or networking permitted without license from IHS Not for Resale

TABLE 7 LIMITING DIMENSIONS OF METRIC J SCREW THREAD STANDARD SERIES, mm

External Threads								
Basic Thread Designation	Tolerance Class	Major Diameter, d		Pitch Diameter, d_2			Minor Diameter, d_3	
		Max.	Min.	Max.	Min.	Tolerance	Max.	Min.
MJ1.6 × 0.35	4h6h	1.600	1.515	1.373	1.333	0.040	1.196	1.135
MJ1.6 × 0.35	4g6g	1.581	1.496	1.354	1.314	0.040	1.177	1.116
MJ1.8 × 0.35	4h6h	1.800	1.715	1.573	1.533	0.040	1.396	1.335
MJ1.8 × 0.35	4g6g	1.781	1.696	1.554	1.514	0.040	1.377	1.316
MJ2 × 0.4	4h6h	2.000	1.905	1.740	1.698	0.042	1.538	1.472
MJ2 × 0.4	4g6g	1.981	1.886	1.721	1.679	0.042	1.519	1.453
MJ2.2 × 0.45	4h6h	2.200	2.100	1.908	1.863	0.045	1.680	1.608
MJ2.2 × 0.45	4g6g	2.180	2.080	1.888	1.843	0.045	1.660	1.588
MJ2.5 × 0.45	4h6h	2.500	2.400	2.208	2.163	0.045	1.980	1.908
MJ2.5 × 0.45	4g6g	2.480	2.380	2.188	2.143	0.045	1.960	1.888
MJ3 × 0.5	4h6h	3.000	2.894	2.675	2.627	0.048	2.423	2.344
MJ3 × 0.5	4g6g	2.980	2.874	2.655	2.607	0.048	2.403	2.324
MJ3.5 × 0.6	4h6h	3.500	3.375	3.110	3.057	0.053	2.807	2.718
MJ3.5 × 0.6	4g6g	3.479	3.354	3.089	3.036	0.053	2.786	2.697
MJ4 × 0.7	4h6h	4.000	3.860	3.545	3.489	0.056	3.192	3.093
MJ4 × 0.7	4g6g	3.978	3.838	3.523	3.467	0.056	3.170	3.071
MJ4.5 × 0.75	4h6h	4.500	4.360	4.013	3.957	0.056	3.634	3.533
MJ4.5 × 0.75	4g6g	4.478	4.338	3.991	3.935	0.056	3.612	3.511
MJ5 × 0.8	4h6h	5.000	4.850	4.480	4.420	0.060	4.076	3.968
MJ5 × 0.8	4g6g	4.976	4.826	4.456	4.396	0.060	4.052	3.944
MJ6 × 0.75	4h6h	6.000	5.860	5.513	5.450	0.063	5.134	5.026
MJ6 × 0.75	4g6g	5.978	5.838	5.491	5.428	0.063	5.112	5.004
MJ6 × 1	4h6h	6.000	5.820	5.350	5.279	0.071	4.845	4.714
MJ6 × 1	4g6g	5.974	5.794	5.324	5.253	0.071	4.819	4.688
MJ7 × 0.75	4h6h	7.000	6.860	6.513	6.450	0.063	6.134	6.026
MJ7 × 0.75	4g6g	6.978	6.838	6.491	6.428	0.063	6.112	6.004
MJ7 × 1	4h6h	7.000	6.820	6.350	6.279	0.071	5.845	5.714
MJ7 × 1	4g6g	6.974	6.794	6.324	6.253	0.071	5.819	5.688
MJ8 × 0.75	4h6h	8.000	7.860	7.513	7.450	0.063	7.134	7.026
MJ8 × 0.75	4g6g	7.978	7.838	7.491	7.428	0.063	7.112	7.004
MJ8 × 1	4h6h	8.000	7.820	7.350	7.279	0.071	6.845	6.714
MJ8 × 1	4g6g	7.974	7.794	7.324	7.253	0.071	6.819	6.688
MJ8 × 1.25	4h6h	8.000	7.788	7.188	7.113	0.075	6.557	6.406
MJ8 × 1.25	4g6g	7.972	7.760	7.160	7.085	0.075	6.529	6.378
MJ9 × 0.75	4h6h	9.000	8.860	8.513	8.450	0.063	8.134	8.026
MJ9 × 0.75	4g6g	8.978	8.838	8.491	8.428	0.063	8.112	8.004
MJ9 × 1	4h6h	9.000	8.820	8.350	8.279	0.071	7.845	7.714
MJ9 × 1	4g6g	8.974	8.794	8.324	8.253	0.071	7.819	7.688
MJ9 × 1.25	4h6h	9.000	8.788	8.188	8.113	0.075	7.557	7.406
MJ9 × 1.25	4g6g	8.972	8.760	8.160	8.085	0.075	7.529	7.378

Copyright ASME International
Provided by IHS under license with ASME
No reproduction or networking permitted without license from IHS
Not for Resale

TABLE 7 LIMITING DIMENSIONS OF METRIC J SCREW THREAD STANDARD SERIES, mm

Internal Threads								
Basic Thread Designation	Tolerance Class	Minor Diameter, D_1		Pitch Diameter, D_2			Major Diameter, D	
		Min.	Max.	Min.	Max.	Tolerance	Min.	Max.
MJ1.6 × 0.35	4H6H	1.259	1.359	1.373	1.426	0.053	1.600	1.704
MJ1.6 × 0.35	4G6G	1.278	1.378	1.392	1.445	0.053	1.619	1.723
MJ1.8 × 0.35	4H6H	1.459	1.559	1.573	1.626	0.053	1.800	1.904
MJ1.8 × 0.35	4G6G	1.478	1.578	1.592	1.645	0.053	1.819	1.923
MJ2 × 0.4	4H6H	1.610	1.722	1.740	1.796	0.056	2.000	2.114
MJ2 × 0.4	4G6G	1.629	1.741	1.759	1.815	0.056	2.019	2.133
MJ2.2 × 0.45	4H6H	1.762	1.887	1.908	1.968	0.060	2.200	2.325
MJ2.2 × 0.45	4G6G	1.782	1.907	1.928	1.988	0.060	2.220	2.345
MJ2.5 × 0.45	4H6H	2.062	2.187	2.208	2.268	0.060	2.500	2.625
MJ2.5 × 0.45	4G6G	2.082	2.207	2.228	2.288	0.060	2.520	2.645
MJ3 × 0.5	4H6H	2.513	2.653	2.675	2.738	0.063	3.000	3.135
MJ3 × 0.5	4G6G	2.533	2.673	2.695	2.758	0.063	3.020	3.155
MJ3.5 × 0.6	4H6H	2.915	3.075	3.110	3.181	0.071	3.500	3.657
MJ3.5 × 0.6	4G6G	2.936	3.096	3.131	3.202	0.071	3.521	3.678
MJ4 × 0.7	4H6H	3.318	3.498	3.545	3.620	0.075	4.000	4.176
MJ4 × 0.7	4G6G	3.340	3.520	3.567	3.642	0.075	4.022	4.198
MJ4.5 × 0.75	4H6H	3.769	3.959	4.013	4.088	0.075	4.500	4.683
MJ4.5 × 0.75	4G6G	3.791	3.981	4.035	4.110	0.075	4.522	4.705
MJ5 × 0.8	4H6H	4.221	4.421	4.480	4.560	0.080	5.000	5.195
MJ5 × 0.8	4G6G	4.245	4.445	4.504	4.584	0.080	5.024	5.219
MJ6 × 0.75	4H5H	5.269	5.419	5.513	5.598	0.085	6.000	6.193
MJ6 × 0.75	4G5G	5.291	5.441	5.535	5.620	0.085	6.022	6.215
MJ6 × 1	4H5H	5.026	5.216	5.350	5.445	0.095	6.000	6.239
MJ6 × 1	4G5G	5.052	5.242	5.376	5.471	0.095	6.026	6.265
MJ7 × 0.75	4H5H	6.269	6.419	6.513	6.598	0.085	7.000	7.193
MJ7 × 0.75	4G5G	6.291	6.441	6.535	6.620	0.085	7.022	7.215
MJ7 × 1	4H5H	6.026	6.216	6.350	6.445	0.095	7.000	7.239
MJ7 × 1	4G5G	6.052	6.242	6.376	6.471	0.095	7.026	7.265
MJ8 × 0.75	4H5H	7.269	7.419	7.513	7.598	0.085	8.000	8.193
MJ8 × 0.75	4G5G	7.291	7.441	7.535	7.620	0.085	8.022	8.215
MJ8 × 1	4H5H	7.026	7.216	7.350	7.445	0.095	8.000	8.239
MJ8 × 1	4G5G	7.052	7.242	7.376	7.471	0.095	8.026	8.265
MJ8 × 1.25	4H5H	6.782	6.994	7.188	7.288	0.100	8.000	8.280
MJ8 × 1.25	4G5G	6.810	7.022	7.216	7.316	0.100	8.028	8.308
MJ9 × 0.75	4H5H	8.269	8.419	8.513	8.598	0.085	9.000	9.193
MJ9 × 0.75	4G5G	8.291	8.441	8.535	8.620	0.085	9.022	9.215
MJ9 × 1	4H5H	8.026	8.216	8.350	8.445	0.095	9.000	9.239
MJ9 × 1	4G5G	8.052	8.242	8.376	8.471	0.095	9.026	9.265
MJ9 × 1.25	4H5H	7.782	7.994	8.188	8.288	0.100	9.000	9.280
MJ9 × 1.25	4G5G	7.810	8.022	8.216	8.316	0.100	9.028	9.308

Copyright ASME International
Provided by IHS under license with ASME
No reproduction or networking permitted without license from IHS Not for Resale

STD.ASME B1.21M-ENGL 1997 ■ 0759670 0589917 474 ■

TABLE 7 LIMITING DIMENSIONS OF METRIC J SCREW THREAD STANDARD SERIES, mm (CONT'D)

External Threads								
Basic Thread Designation	Tolerance Class	Major Diameter, d		Pitch Diameter, d_2			Minor Diameter, d_3	
		Max.	Min.	Max.	Min.	Tolerance	Max.	Min.
MJ10 × 0.75	4h6h	10.000	9.860	9.513	9.450	0.063	9.134	9.026
MJ10 × 0.75	4g6g	9.978	9.838	9.491	9.428	0.063	9.112	9.004
MJ10 × 1	4h6h	10.000	9.820	9.350	9.279	0.071	8.845	8.714
MJ10 × 1	4g6g	9.974	9.794	9.324	9.253	0.071	8.819	8.688
MJ10 × 1.25	4h6h	10.000	9.788	9.188	9.113	0.075	8.557	8.406
MJ10 × 1.25	4g6g	9.972	9.760	9.160	9.085	0.075	8.529	8.378
MJ10 × 1.5	4h6h	10.000	9.764	9.026	8.941	0.085	8.268	8.092
MJ10 × 1.5	4g6g	9.968	9.732	8.994	8.909	0.085	8.236	8.060
MJ11 × 0.75	4h6h	11.000	10.860	10.513	10.450	0.063	10.134	10.026
MJ11 × 0.75	4g6g	10.978	10.838	10.491	10.428	0.063	10.112	10.004
MJ11 × 1	4h6h	11.000	10.820	10.350	10.279	0.071	9.845	9.714
MJ11 × 1	4g6g	10.974	10.794	10.324	10.253	0.071	9.819	9.688
MJ11 × 1.25	4h6h	11.000	10.788	10.188	10.113	0.075	9.557	9.406
MJ11 × 1.25	4g6g	10.972	10.760	10.160	10.085	0.075	9.529	9.378
MJ11 × 1.5	4h6h	11.000	10.764	10.026	9.941	0.085	9.268	9.092
MJ11 × 1.5	4g6g	10.968	10.732	9.994	9.909	0.085	9.236	9.060
MJ12 × 1	4h6h	12.000	11.820	11.350	11.275	0.075	10.845	10.710
MJ12 × 1	4g6g	11.974	11.794	11.324	11.249	0.075	10.819	10.684
MJ12 × 1.25	4h6h	12.000	11.788	11.188	11.103	0.085	10.557	10.396
MJ12 × 1.25	4g6g	11.972	11.760	11.160	11.075	0.085	10.529	10.368
MJ12 × 1.5	4h6h	12.000	11.764	11.026	10.936	0.090	10.268	10.087
MJ12 × 1.5	4g6g	11.968	11.732	10.994	10.904	0.090	10.236	10.055
MJ12 × 1.75	4h6h	12.000	11.735	10.863	10.768	0.095	9.979	9.778
MJ12 × 1.75	4g6g	11.966	11.701	10.829	10.734	0.095	9.945	9.744
MJ14 × 1	4h6h	14.000	13.820	13.350	13.275	0.075	12.845	12.710
MJ14 × 1	4g6g	13.974	13.794	13.324	13.249	0.075	12.819	12.684
MJ14 × 1.25	4h6h	14.000	13.788	13.188	13.103	0.085	12.557	12.396
MJ14 × 1.25	4g6g	13.972	13.760	13.160	13.075	0.085	12.529	12.368
MJ14 × 1.5	4h6h	14.000	13.764	13.026	12.936	0.090	12.268	12.087
MJ14 × 1.5	4g6g	13.968	13.732	12.994	12.904	0.090	12.236	12.055
MJ14 × 2	4h6h	14.000	13.720	12.701	12.601	0.100	11.691	11.469
MJ14 × 2	4g6g	13.962	13.682	12.663	12.563	0.100	11.653	11.431
MJ15 × 1	4h6h	15.000	14.820	14.350	14.275	0.075	13.845	13.710
MJ15 × 1	4g6g	14.974	14.794	14.324	14.249	0.075	13.819	13.684
MJ15 × 1.5	4h6h	15.000	14.764	14.026	13.936	0.090	13.268	13.087
MJ15 × 1.5	4g6g	14.968	14.732	13.994	13.904	0.090	13.236	13.055
MJ16 × 1	4h6h	16.000	15.820	15.350	15.275	0.075	14.845	14.710
MJ16 × 1	4g6g	15.974	15.794	15.324	15.249	0.075	14.819	14.684
MJ16 × 1.5	4h6h	16.000	15.764	15.026	14.936	0.090	14.268	14.087
MJ16 × 1.5	4g6g	15.968	15.732	14.994	14.904	0.090	14.236	14.055
MJ16 × 2	4h6h	16.000	15.720	14.701	14.601	0.100	13.691	13.469
MJ16 × 2	4g6g	15.962	15.682	14.663	14.563	0.100	13.653	13.431

Copyright ASME International
Provided by IHS under license with ASME
No reproduction or networking permitted without license from IHS
Not for Resale

TABLE 7 LIMITING DIMENSIONS OF METRIC J SCREW THREAD STANDARD SERIES, mm (CONT'D)

Internal Threads								
Basic Thread Designation	Tolerance Class	Minor Diameter, D_1		Pitch Diameter, D_2			Major Diameter, D	
		Min.	Max.	Min.	Max.	Tolerance	Min.	Max.
MJ10 × 0.75	4H5H	9.269	9.419	9.513	9.598	0.085	10.000	10.193
MJ10 × 0.75	4G5G	9.291	9.441	9.535	9.620	0.085	10.022	10.215
MJ10 × 1	4H5H	9.026	9.216	9.350	9.445	0.095	10.000	10.239
MJ10 × 1	4G5G	9.052	9.242	9.376	9.471	0.095	10.026	10.265
MJ10 × 1.25	4H5H	8.782	8.994	9.188	9.288	0.100	10.000	10.280
MJ10 × 1.25	4G5G	8.810	9.022	9.216	9.316	0.100	10.028	10.308
MJ10 × 1.5	4H5H	8.539	8.775	9.026	9.138	0.112	10.000	10.329
MJ10 × 1.5	4G5G	8.571	8.807	9.058	9.170	0.112	10.032	10.361
MJ11 × 0.75	4H5H	10.269	10.419	10.513	10.598	0.085	11.000	11.193
MJ11 × 0.75	4G5G	10.291	10.441	10.535	10.620	0.085	11.022	11.215
MJ11 × 1	4H5H	10.026	10.216	10.350	10.445	0.095	11.000	11.239
MJ11 × 1	4G5G	10.052	10.242	10.376	10.471	0.095	11.026	11.265
MJ11 × 1.25	4H5H	9.782	9.994	10.188	10.288	0.100	11.000	11.280
MJ11 × 1.25	4G5G	9.810	10.022	10.216	10.316	0.100	11.028	11.308
MJ11 × 1.5	4H5H	9.539	9.775	10.026	10.138	0.112	11.000	11.329
MJ11 × 1.5	4G5G	9.571	9.807	10.058	10.170	0.112	11.032	11.361
MJ12 × 1	4H5H	11.026	11.216	11.350	11.450	0.100	12.000	12.244
MJ12 × 1	4G5G	11.052	11.242	11.376	11.476	0.100	12.026	12.270
MJ12 × 1.25	4H5H	10.782	10.994	11.188	11.300	0.112	12.000	12.292
MJ12 × 1.25	4G5G	10.810	11.022	11.216	11.328	0.112	12.028	12.320
MJ12 × 1.5	4H5H	10.539	10.775	11.026	11.144	0.118	12.000	12.335
MJ12 × 1.5	4G5G	10.571	10.807	11.058	11.176	0.118	12.032	12.367
MJ12 × 1.75	4H5H	10.295	10.560	10.863	10.988	0.125	12.000	12.377
MJ12 × 1.75	4G5G	10.329	10.594	10.897	11.022	0.125	12.034	12.411
MJ14 × 1	4H5H	13.026	13.216	13.350	13.450	0.100	14.000	14.244
MJ14 × 1	4G5G	13.052	13.242	13.376	13.476	0.100	14.026	14.270
MJ14 × 1.25	4H5H	12.782	12.994	13.188	13.300	0.112	14.000	14.292
MJ14 × 1.25	4G5G	12.810	13.022	13.216	13.328	0.112	14.028	14.320
MJ14 × 1.5	4H5H	12.539	12.775	13.026	13.144	0.118	14.000	14.335
MJ14 × 1.5	4G5G	12.571	12.807	13.058	13.176	0.118	14.032	14.367
MJ14 × 2	4H5H	12.051	12.351	12.701	12.833	0.132	14.000	14.421
MJ14 × 2	4G5G	12.089	12.389	12.739	12.871	0.132	14.038	14.459
MJ15 × 1	4H5H	14.026	14.216	14.350	14.450	0.100	15.000	15.244
MJ15 × 1	4G5G	14.052	14.242	14.376	14.476	0.100	15.026	15.270
MJ15 × 1.5	4H5H	13.539	13.775	14.026	14.144	0.118	15.000	15.335
MJ15 × 1.5	4G5G	13.571	13.807	14.058	14.176	0.118	15.032	15.367
MJ16 × 1	4H5H	15.026	15.216	15.350	15.450	0.100	16.000	16.244
MJ16 × 1	4G5G	15.052	15.242	15.376	15.476	0.100	16.026	16.270
MJ16 × 1.5	4H5H	14.539	14.775	15.026	15.144	0.118	16.000	16.335
MJ16 × 1.5	4G5G	14.571	14.807	15.058	15.176	0.118	16.032	16.367
MJ16 × 2	4H5H	14.051	14.351	14.701	14.833	0.132	16.000	16.421
MJ16 × 2	4G5G	14.089	14.389	14.739	14.871	0.132	16.038	16.459

Copyright ASME International
Provided by IHS under license with ASME
No reproduction or networking permitted without license from IHS
Not for Resale

TABLE 7 LIMITING DIMENSIONS OF METRIC J SCREW THREAD STANDARD SERIES, mm (CONT'D)

External Threads								
Basic Thread Designation	Tolerance Class	Major Diameter, d		Pitch Diameter, d_2			Minor Diameter, d_3	
		Max.	Min.	Max.	Min.	Tolerance	Max.	Min.
MJ17 × 1	4h6h	17.000	16.820	16.350	16.275	0.075	15.845	15.710
MJ17 × 1	4g6g	16.974	16.794	16.324	16.249	0.075	15.819	15.684
MJ17 × 1.5	4h6h	17.000	16.764	16.026	15.936	0.090	15.268	15.087
MJ17 × 1.5	4g6g	16.968	16.732	15.994	15.904	0.090	15.236	15.055
MJ18 × 1	4h6h	18.000	17.820	17.350	17.275	0.075	16.845	16.710
MJ18 × 1	4g6g	17.974	17.794	17.324	17.249	0.075	16.819	16.684
MJ18 × 1.5	4h6h	18.000	17.764	17.026	16.936	0.090	16.268	16.087
MJ18 × 1.5	4g6g	17.968	17.732	16.994	16.904	0.090	16.236	16.055
MJ18 × 2	4h6h	18.000	17.720	16.701	16.601	0.100	15.691	15.469
MJ18 × 2	4g6g	17.962	17.682	16.663	16.563	0.100	15.653	15.431
MJ18 × 2.5	4h6h	18.000	17.665	16.376	16.270	0.106	15.113	14.856
MJ18 × 2.5	4g6g	17.958	17.623	16.334	16.228	0.106	15.071	14.814
MJ20 × 1	4h6h	20.000	19.820	19.350	19.275	0.075	18.845	18.710
MJ20 × 1	4g6g	19.974	19.794	19.324	19.249	0.075	18.819	18.684
MJ20 × 1.5	4h6h	20.000	19.764	19.026	18.936	0.090	18.268	18.087
MJ20 × 1.5	4g6g	19.968	19.732	18.994	18.904	0.090	18.236	18.055
MJ20 × 2	4h6h	20.000	19.720	18.701	18.601	0.100	17.691	17.469
MJ20 × 2	4g6g	19.962	19.682	18.663	18.563	0.100	17.653	17.431
MJ20 × 2.5	4h6h	20.000	19.665	18.376	18.270	0.106	17.113	16.856
MJ20 × 2.5	4g6g	19.958	19.623	18.334	18.228	0.106	17.071	16.814
MJ22 × 1	4h6h	22.000	21.820	21.350	21.275	0.075	20.845	20.710
MJ22 × 1	4g6g	21.974	21.794	21.324	21.249	0.075	20.819	20.684
MJ22 × 1.5	4h6h	22.000	21.764	21.026	20.936	0.090	20.268	20.087
MJ22 × 1.5	4g6g	21.968	21.732	20.994	20.904	0.090	20.236	20.055
MJ22 × 2	4h6h	22.000	21.720	20.701	20.601	0.100	19.691	19.469
MJ22 × 2	4g6g	21.962	21.682	20.663	20.563	0.100	19.653	19.431
MJ22 × 2.5	4h6h	22.000	21.665	20.376	20.270	0.106	19.113	18.856
MJ22 × 2.5	4g6g	21.958	21.623	20.334	20.228	0.106	19.071	18.814
MJ24 × 1	4h6h	24.000	23.820	23.350	23.270	0.080	22.845	22.705
MJ24 × 1	4g6g	23.974	23.794	23.324	23.244	0.080	22.819	22.679
MJ24 × 1.5	4h6h	24.000	23.764	23.026	22.931	0.095	22.268	22.082
MJ24 × 1.5	4g6g	23.968	23.732	22.994	22.899	0.095	22.236	22.050
MJ24 × 2	4h6h	24.000	23.720	22.701	22.595	0.106	21.691	21.463
MJ24 × 2	4g6g	23.962	23.682	22.663	22.557	0.106	21.653	21.425
MJ24 × 3	4h6h	24.000	23.625	22.051	21.926	0.125	20.536	20.229
MJ24 × 3	4g6g	23.952	23.577	22.003	21.878	0.125	20.488	20.181
MJ25 × 1	4h6h	25.000	24.820	24.350	24.270	0.080	23.845	23.705
MJ25 × 1	4g6g	24.974	24.794	24.324	24.244	0.080	23.819	23.679
MJ25 × 1.5	4h6h	25.000	24.764	24.026	23.931	0.095	23.268	23.082
MJ25 × 1.5	4g6g	24.968	24.732	23.994	23.899	0.095	23.236	23.050
MJ25 × 2	4h6h	25.000	24.720	23.701	23.595	0.106	22.691	22.463
MJ25 × 2	4g6g	24.962	24.682	23.663	23.557	0.106	22.653	22.425

Copyright ASME International
Provided by IHS under license with ASME
No reproduction or networking permitted without license from IHS
Not for Resale

TABLE 7 LIMITING DIMENSIONS OF METRIC J SCREW THREAD STANDARD SERIES, mm (CONT'D)

Internal Threads								
Basic Thread Designation	Tolerance Class	Minor Diameter, D_1		Pitch Diameter, D_2			Major Diameter, D	
		Min.	Max.	Min.	Max.	Tolerance	Min.	Max.
MJ17 × 1	4H5H	16.026	16.216	16.350	16.450	0.100	17.000	17.244
MJ17 × 1	4G5G	16.052	16.242	16.376	16.476	0.100	17.026	17.270
MJ17 × 1.5	4H5H	15.539	15.775	16.026	16.144	0.118	17.000	17.335
MJ17 × 1.5	4G5G	15.571	15.807	16.058	16.176	0.118	17.032	17.367
MJ18 × 1	4H5H	17.026	17.216	17.350	17.450	0.100	18.000	18.244
MJ18 × 1	4G5G	17.052	17.242	17.376	17.476	0.100	18.026	18.270
MJ18 × 1.5	4H5H	16.539	16.775	17.026	17.144	0.118	18.000	18.335
MJ18 × 1.5	4G5G	16.571	16.807	17.058	17.176	0.118	18.032	18.367
MJ18 × 2	4H5H	16.051	16.351	16.701	16.833	0.132	18.000	18.421
MJ18 × 2	4G5G	16.089	16.389	16.739	16.871	0.132	18.038	18.459
MJ18 × 2.5	4H5H	15.564	15.919	16.376	16.516	0.140	18.000	18.501
MJ18 × 2.5	4G5G	15.606	15.961	16.418	16.558	0.140	18.042	18.543
MJ20 × 1	4H5H	19.026	19.216	19.350	19.450	0.100	20.000	20.244
MJ20 × 1	4G5G	19.052	19.242	19.376	19.476	0.100	20.026	20.270
MJ20 × 1.5	4H5H	18.539	18.775	19.026	19.144	0.118	20.000	20.335
MJ20 × 1.5	4G5G	18.571	18.807	19.058	19.176	0.118	20.032	20.367
MJ20 × 2	4H5H	18.051	18.351	18.701	18.833	0.132	20.000	20.421
MJ20 × 2	4G5G	18.089	18.389	18.739	18.871	0.132	20.038	20.459
MJ20 × 2.5	4H5H	17.564	17.919	18.376	18.516	0.140	20.000	20.501
MJ20 × 2.5	4G5G	17.606	17.961	18.418	18.558	0.140	20.042	20.543
MJ22 × 1	4H5H	21.026	21.216	21.350	21.450	0.100	22.000	22.244
MJ22 × 1	4G5G	21.052	21.242	21.376	21.476	0.100	22.026	22.270
MJ22 × 1.5	4H5H	20.539	20.775	21.026	21.144	0.118	22.000	22.335
MJ22 × 1.5	4G5G	20.571	20.807	21.058	21.176	0.118	22.032	22.367
MJ22 × 2	4H5H	20.051	20.351	20.701	20.833	0.132	22.000	22.421
MJ22 × 2	4G5G	20.089	20.389	20.739	20.871	0.132	22.038	22.459
MJ22 × 2.5	4H5H	19.564	19.919	20.376	20.516	0.140	22.000	22.501
MJ22 × 2.5	4G5G	19.606	19.961	20.418	20.558	0.140	22.042	22.543
MJ24 × 1	4H5H	23.026	23.216	23.350	23.456	0.106	24.000	24.250
MJ24 × 1	4G5G	23.052	23.242	23.376	23.482	0.106	24.026	24.276
MJ24 × 1.5	4H5H	22.539	22.775	23.026	23.151	0.125	24.000	24.342
MJ24 × 1.5	4G5G	22.571	22.807	23.058	23.183	0.125	24.032	24.374
MJ24 × 2	4H5H	22.051	22.351	22.701	22.841	0.140	24.000	24.429
MJ24 × 2	4G5G	22.089	22.389	22.739	22.879	0.140	24.038	24.467
MJ24 × 3	4H5H	21.077	21.477	22.051	22.221	0.170	24.000	24.603
MJ24 × 3	4G5G	21.125	21.525	22.099	22.269	0.170	24.048	24.651
MJ25 × 1	4H5H	24.026	24.216	24.350	24.456	0.106	25.000	25.250
MJ25 × 1	4G5G	24.052	24.242	24.376	24.482	0.106	25.026	25.276
MJ25 × 1.5	4H5H	23.539	23.775	24.026	24.151	0.125	25.000	25.342
MJ25 × 1.5	4G5G	23.571	23.807	24.058	24.183	0.125	25.032	25.374
MJ25 × 2	4H5H	23.051	23.351	23.701	23.841	0.140	25.000	25.429
MJ25 × 2	4G5G	23.089	23.389	23.739	23.879	0.140	25.038	25.467

Copyright ASME International
Provided by IHS under license with ASME
No reproduction or networking permitted without license from IHS
Not for Resale

TABLE 7 LIMITING DIMENSIONS OF METRIC J SCREW THREAD STANDARD SERIES, mm (CONT'D)

External Threads								
Basic Thread Designation	Tolerance Class	Major Diameter, d		Pitch Diameter, d_2			Minor Diameter, d_3	
		Max.	Min.	Max.	Min.	Tolerance	Max.	Min.
MJ26 × 1.5	4h6h	26.000	25.764	25.026	24.931	0.095	24.268	24.082
MJ26 × 1.5	4g6g	25.968	25.732	24.994	24.899	0.095	24.236	24.050
MJ27 × 1	4h6h	27.000	26.820	26.350	26.270	0.080	25.845	25.705
MJ27 × 1	4g6g	26.974	26.794	26.324	26.244	0.080	25.819	25.679
MJ27 × 1.5	4h6h	27.000	26.764	26.026	25.931	0.095	25.268	25.082
MJ27 × 1.5	4g6g	26.968	26.732	25.994	25.899	0.095	25.236	25.050
MJ27 × 2	4h6h	27.000	26.720	25.701	25.595	0.106	24.691	24.463
MJ27 × 2	4g6g	26.962	26.682	25.663	25.557	0.106	24.653	24.425
MJ27 × 3	4h6h	27.000	26.625	25.051	24.926	0.125	23.536	23.229
MJ27 × 3	4g6g	26.952	26.577	25.003	24.878	0.125	23.488	23.181
MJ28 × 1	4h6h	28.000	27.820	27.350	27.270	0.080	26.845	26.705
MJ28 × 1	4g6g	27.974	27.794	27.324	27.244	0.080	26.819	26.679
MJ28 × 1.5	4h6h	28.000	27.764	27.026	26.931	0.095	26.268	26.082
MJ28 × 1.5	4g6g	27.968	27.732	26.994	26.899	0.095	26.236	26.050
MJ28 × 2	4h6h	28.000	27.720	26.701	26.595	0.106	25.691	25.463
MJ28 × 2	4g6g	27.962	27.682	26.663	26.557	0.106	25.653	25.425
MJ30 × 1	4h6h	30.000	29.820	29.350	29.270	0.080	28.845	28.705
MJ30 × 1	4g6g	29.974	29.794	29.324	29.244	0.080	28.819	28.679
MJ30 × 1.5	4h6h	30.000	29.764	29.026	28.931	0.095	28.268	28.082
MJ30 × 1.5	4g6g	29.968	29.732	28.994	28.899	0.095	28.236	28.050
MJ30 × 2	4h6h	30.000	29.720	28.701	28.595	0.106	27.691	27.463
MJ30 × 2	4g6g	29.962	29.682	28.663	28.557	0.106	27.653	27.425
MJ30 × 3	4h6h	30.000	29.625	28.051	27.926	0.125	26.536	26.229
MJ30 × 3	4g6g	29.952	29.577	28.003	27.878	0.125	26.488	26.181
MJ30 × 3.5	4h6h	30.000	29.575	27.727	27.595	0.132	25.959	25.614
MJ30 × 3.5	4g6g	29.947	29.522	27.674	27.542	0.132	25.906	25.561
MJ32 × 1.5	4h6h	32.000	31.764	31.026	30.931	0.095	30.268	30.082
MJ32 × 1.5	4g6g	31.968	31.732	30.994	30.899	0.095	30.236	30.050
MJ32 × 2	4h6h	32.000	31.720	30.701	30.595	0.106	29.691	29.463
MJ32 × 2	4g6g	31.962	31.682	30.663	30.557	0.106	29.653	29.425
MJ33 × 1.5	4h6h	33.000	32.764	32.026	31.931	0.095	31.268	31.082
MJ33 × 1.5	4g6g	32.968	32.732	31.994	31.899	0.095	31.236	31.050
MJ33 × 2	4h6h	33.000	32.720	31.701	31.595	0.106	30.691	30.463
MJ33 × 2	4g6g	32.962	32.682	31.663	31.557	0.106	30.653	30.425
MJ33 × 3	4h6h	33.000	32.625	31.051	30.926	0.125	29.536	29.229
MJ33 × 3	4g6g	32.952	32.577	31.003	30.878	0.125	29.488	29.181
MJ35 × 1.5	4h6h	35.000	34.764	34.026	33.931	0.095	33.268	33.082
MJ35 × 1.5	4g6g	34.968	34.732	33.994	33.899	0.095	33.236	33.050
MJ36 × 1.5	4h6h	36.000	35.764	35.026	34.931	0.095	34.268	34.082
MJ36 × 1.5	4g6g	35.968	35.732	34.994	34.899	0.095	34.236	34.050
MJ36 × 2	4h6h	36.000	35.720	34.701	34.595	0.106	33.691	33.463
MJ36 × 2	4g6g	35.692	35.682	34.663	34.557	0.106	33.653	33.425
MJ36 × 3	4h6h	36.000	35.625	34.051	33.926	0.125	32.536	32.229
MJ36 × 3	4g6g	35.952	35.577	34.003	33.878	0.125	32.488	32.181
MJ36 × 4	4h6h	36.000	35.525	33.402	33.262	0.140	31.381	30.999
MJ36 × 4	4g6g	35.940	35.465	33.342	33.202	0.140	31.321	30.939

Copyright ASME International
Provided by IHS under license with ASME
No reproduction or networking permitted without license from IHS
Not for Resale

TABLE 7 LIMITING DIMENSIONS OF METRIC J SCREW THREAD STANDARD SERIES, mm (CONT'D)

Internal Threads								
Basic Thread Designation	Tolerance Class	Minor Diameter, D_1		Pitch Diameter, D_2			Major Diameter, D	
		Min.	Max.	Min.	Max.	Tolerance	Min.	Max.
MJ26 × 1.5	4H5H	24.539	24.775	25.026	25.151	0.125	26.000	26.342
MJ26 × 1.5	4G5G	24.571	24.807	25.058	25.183	0.125	26.032	26.374
MJ27 × 1	4H5H	26.026	26.216	26.350	26.456	0.106	27.000	27.250
MJ27 × 1	4G5G	26.052	26.242	26.376	26.482	0.106	27.026	27.276
MJ27 × 1.5	4H5H	25.539	25.775	26.026	26.151	0.125	27.000	27.342
MJ27 × 1.5	4G5G	25.571	25.807	26.058	26.183	0.125	27.032	27.374
MJ27 × 2	4H5H	25.051	25.351	25.701	25.841	0.140	27.000	27.429
MJ27 × 2	4G5G	25.089	25.389	25.739	25.879	0.140	27.038	27.467
MJ27 × 3	4H5H	24.077	24.477	25.051	25.221	0.170	27.000	27.603
MJ27 × 3	4G5G	24.125	24.525	25.099	25.269	0.170	27.048	27.651
MJ28 × 1	4H5H	27.026	27.216	27.350	27.456	0.106	28.000	28.250
MJ28 × 1	4G5G	27.052	27.242	27.376	27.482	0.106	28.026	28.276
MJ28 × 1.5	4H5H	26.539	26.775	27.026	27.151	0.125	28.000	28.342
MJ28 × 1.5	4G5G	26.571	26.807	27.058	27.183	0.125	28.032	28.374
MJ28 × 2	4H5H	26.051	26.351	26.701	26.841	0.140	28.000	28.429
MJ28 × 2	4G5G	26.089	26.389	26.739	26.879	0.140	28.038	28.467
MJ30 × 1	4H5H	29.026	29.216	29.350	29.456	0.106	30.000	30.250
MJ30 × 1	4G5G	29.052	29.242	29.376	29.482	0.106	30.026	30.276
MJ30 × 1.5	4H5H	28.539	28.775	29.026	29.151	0.125	30.000	30.342
MJ30 × 1.5	4G5G	28.571	28.807	29.058	29.183	0.125	30.032	30.374
MJ30 × 2	4H5H	28.051	28.351	28.701	28.841	0.140	30.000	30.429
MJ30 × 2	4G5G	28.089	28.389	28.739	28.879	0.140	30.038	30.467
MJ30 × 3	4H5H	27.077	27.477	28.051	28.221	0.170	30.000	30.603
MJ30 × 3	4G5G	27.125	27.525	28.099	28.269	0.170	30.048	30.651
MJ30 × 3.5	4H5H	26.590	27.040	27.727	27.907	0.180	30.000	30.686
MJ30 × 3.5	4G5G	26.643	27.093	27.780	27.960	0.180	30.053	30.739
MJ32 × 1.5	4H5H	30.539	30.775	31.026	31.151	0.125	32.000	32.342
MJ32 × 1.5	4G5G	30.571	30.807	31.058	31.183	0.125	32.032	32.374
MJ32 × 2	4H5H	30.051	30.351	30.701	30.841	0.140	32.000	32.429
MJ32 × 2	4G5G	30.089	30.389	30.739	30.879	0.140	32.038	32.467
MJ33 × 1.5	4H5H	31.539	31.775	32.026	32.151	0.125	33.000	33.342
MJ33 × 1.5	4G5G	31.571	31.807	32.058	32.183	0.125	33.032	33.374
MJ33 × 2	4H5H	31.051	31.351	31.701	31.841	0.140	33.000	33.429
MJ33 × 2	4G5G	31.089	31.389	31.739	31.879	0.140	33.038	33.467
MJ33 × 3	4H5H	30.077	30.477	31.051	31.221	0.170	33.000	33.603
MJ33 × 3	4G5G	30.125	30.525	31.099	31.269	0.170	33.048	33.651
MJ35 × 1.5	4H5H	33.539	33.775	34.026	34.151	0.125	35.000	35.342
MJ35 × 1.5	4G5G	33.571	33.807	34.058	34.183	0.125	35.032	35.374
MJ36 × 1.5	4H5H	34.539	34.775	35.026	35.151	0.125	36.000	36.342
MJ36 × 1.5	4G5G	34.571	34.807	35.058	35.183	0.125	36.032	36.374
MJ36 × 2	4H5H	34.051	34.351	34.701	34.841	0.140	36.000	36.429
MJ36 × 2	4G5G	34.089	34.389	34.739	34.879	0.140	36.038	36.467
MJ36 × 3	4H5H	33.077	33.477	34.051	34.221	0.170	36.000	36.603
MJ36 × 3	4G5G	33.125	33.525	34.099	34.269	0.170	36.048	36.651
MJ36 × 4	4H5H	32.103	32.578	33.402	33.592	0.190	36.000	36.767
MJ36 × 4	4G5G	32.163	32.638	33.462	33.652	0.190	36.060	36.827

Copyright ASME International
Provided by IHS under license with ASME
No reproduction or networking permitted without license from IHS
Not for Resale

TABLE 7 LIMITING DIMENSIONS OF METRIC J SCREW THREAD STANDARD SERIES, mm (CONT'D)

External Threads								
Basic Thread Designation	Tolerance Class	Major Diameter, d		Pitch Diameter, d_2			Minor Diameter, d_3	
		Max.	Min.	Max.	Min.	Tolerance	Max.	Min.
MJ38 × 1.5	4h6h	38.000	37.764	37.026	36.931	0.095	36.268	36.082
MJ38 × 1.5	4g6g	37.968	37.732	36.994	36.899	0.095	36.236	36.050
MJ39 × 1.5	4h6h	39.000	38.764	38.026	37.931	0.095	37.268	37.082
MJ39 × 1.5	4g6g	38.968	38.732	37.994	37.899	0.095	37.236	37.050
MJ39 × 2	4h6h	39.000	38.720	37.701	37.595	0.106	36.691	36.463
MJ39 × 2	4g6g	38.962	38.682	37.663	37.557	0.106	36.653	36.425
MJ39 × 3	4h6h	39.000	38.625	37.051	36.926	0.125	35.536	35.229
MJ39 × 3	4g6g	38.952	38.577	37.003	36.878	0.125	35.488	35.181
MJ40 × 1.5	4h6h	40.000	39.764	39.026	38.931	0.095	38.268	38.082
MJ40 × 1.5	4g6g	39.968	39.732	38.994	38.899	0.095	38.236	38.050
MJ40 × 2	4h6h	40.000	39.720	38.701	38.595	0.106	37.691	37.463
MJ40 × 2	4g6g	39.962	39.682	38.663	38.557	0.106	37.653	37.425
MJ40 × 3	4h6h	40.000	39.625	38.051	37.926	0.125	36.536	36.229
MJ40 × 3	4g6g	39.952	39.577	38.003	37.878	0.125	36.488	36.181
MJ42 × 1.5	4h6h	42.000	41.764	41.026	40.931	0.095	40.268	40.082
MJ42 × 1.5	4g6g	41.968	41.732	40.994	40.899	0.095	40.236	40.050
MJ42 × 2	4h6h	42.000	41.720	40.701	40.595	0.106	39.691	39.463
MJ42 × 2	4g6g	41.962	41.682	40.663	40.557	0.106	39.653	39.425
MJ42 × 3	4h6h	42.000	41.625	40.051	39.926	0.125	38.536	38.229
MJ42 × 3	4g6g	41.952	41.577	40.003	39.878	0.125	38.488	38.181
MJ42 × 4.5	4h6h	42.000	41.500	39.077	38.927	0.150	36.804	36.381
MJ42 × 4.5	4g6g	41.937	41.437	39.014	38.864	0.150	36.741	36.318
MJ45 × 1.5	4h6h	45.000	44.764	44.026	43.931	0.095	43.268	43.082
MJ45 × 1.5	4g6g	44.968	44.732	43.994	43.899	0.095	43.236	43.050
MJ45 × 2	4h6h	45.000	44.720	43.701	43.595	0.106	42.691	42.463
MJ45 × 2	4g6g	44.962	44.682	43.663	43.557	0.106	42.653	42.425
MJ45 × 3	4h6h	45.000	44.625	43.051	42.926	0.125	41.536	41.229
MJ45 × 3	4g6g	44.952	44.577	43.003	42.878	0.125	41.488	41.181
MJ48 × 1.5	4h6h	48.000	47.764	47.026	46.926	0.100	46.268	46.077
MJ48 × 1.5	4g6g	47.968	47.732	46.994	46.894	0.100	46.236	46.045
MJ48 × 2	4h6h	48.000	47.720	46.701	46.589	0.112	45.691	45.457
MJ48 × 2	4g6g	47.962	47.682	46.663	46.551	0.112	45.653	45.419
MJ48 × 3	4h6h	48.000	47.625	46.051	45.919	0.132	44.536	44.222
MJ48 × 3	4g6g	47.952	47.577	46.003	45.871	0.132	44.488	44.174
MJ48 × 5	4h6h	48.000	47.470	44.752	44.592	0.160	42.226	41.763
MJ48 × 5	4g6g	47.929	47.399	44.681	44.521	0.160	42.155	41.692
MJ50 × 1.5	4h6h	50.000	49.764	49.026	48.926	0.100	48.268	48.077
MJ50 × 1.5	4g6g	49.968	49.732	48.994	48.894	0.100	48.236	48.045
MJ50 × 2	4h6h	50.000	49.720	48.701	48.589	0.112	47.691	47.457
MJ50 × 2	4g6g	49.962	49.682	48.663	48.551	0.112	47.653	47.419
MJ50 × 3	4h6h	50.000	49.625	48.051	47.919	0.132	46.536	46.222
MJ50 × 3	4g6g	49.952	49.577	48.003	47.871	0.132	46.488	46.174
MJ52 × 1.5	4h6h	52.000	51.764	51.026	50.926	0.100	50.268	50.077
MJ52 × 1.5	4g6g	51.968	51.732	50.994	50.894	0.100	50.236	50.045
MJ52 × 2	4h6h	52.000	51.720	50.701	50.589	0.112	49.691	49.457
MJ52 × 2	4g6g	51.962	51.682	50.663	50.551	0.112	49.653	49.419
MJ52 × 3	4h6h	52.000	51.625	50.051	49.919	0.132	48.536	48.222
MJ52 × 3	4g6g	51.952	51.577	50.003	49.871	0.132	48.488	48.174

Copyright ASME International
Provided by IHS under license with ASME
No reproduction or networking permitted without license from IHS
Not for Resale

TABLE 7 LIMITING DIMENSIONS OF METRIC J SCREW THREAD STANDARD SERIES, mm (CONT'D)

Internal Threads								
Basic Thread Designation	Tolerance Class	Minor Diameter, D_1		Pitch Diameter, D_2			Major Diameter, D	
		Min.	Max.	Min.	Max.	Tolerance	Min.	Max.
MJ38 × 1.5	4H5H	36.539	36.775	37.026	37.151	0.125	38.000	38.342
MJ38 × 1.5	4G5G	36.571	36.807	37.058	37.183	0.125	38.032	36.374
MJ39 × 1.5	4H5H	37.539	37.775	38.026	38.151	0.125	39.000	39.342
MJ39 × 1.5	4G5G	37.571	37.807	38.058	38.183	0.125	39.032	39.374
MJ39 × 2	4H5H	37.051	37.351	37.701	37.841	0.140	39.000	39.429
MJ39 × 2	4G5G	37.089	37.389	37.739	37.879	0.140	39.038	39.467
MJ39 × 3	4H5H	36.077	36.477	37.051	37.221	0.170	39.000	39.603
MJ39 × 3	4G5G	36.125	36.525	37.099	37.269	0.170	39.048	39.651
MJ40 × 1.5	4H5H	38.539	38.775	39.026	39.151	0.125	40.000	40.342
MJ40 × 1.5	4G5G	38.571	38.807	39.058	39.183	0.125	40.032	40.374
MJ40 × 2	4H5H	38.051	38.351	38.701	38.841	0.140	40.000	40.429
MJ40 × 2	4G5G	38.089	38.389	38.739	38.879	0.140	40.038	40.467
MJ40 × 3	4H5H	37.077	37.477	38.051	38.221	0.170	40.000	40.603
MJ40 × 3	4G5G	37.125	37.525	38.099	38.269	0.170	40.048	40.651
MJ42 × 1.5	4H5H	40.539	40.775	41.026	41.151	0.125	42.000	42.342
MJ42 × 1.5	4G5G	40.571	40.807	41.058	41.183	0.125	42.032	42.374
MJ42 × 2	4H5H	40.051	40.351	40.701	40.841	0.140	42.000	42.429
MJ42 × 2	4G5G	40.089	40.389	40.739	40.879	0.140	42.038	42.467
MJ42 × 3	4H5H	39.077	39.477	40.051	40.221	0.170	42.000	42.603
MJ42 × 3	4G5G	39.125	39.525	40.099	40.269	0.170	42.048	42.651
MJ42 × 4.5	4H5H	37.616	38.146	39.077	39.277	0.200	42.000	42.849
MJ42 × 4.5	4G5G	37.679	38.209	39.140	39.340	0.200	42.063	42.912
MJ45 × 1.5	4H5H	43.539	43.775	44.026	44.151	0.125	45.000	45.342
MJ45 × 1.5	4G5G	43.571	43.807	44.058	44.183	0.125	45.032	45.374
MJ45 × 2	4H5H	43.051	43.351	43.701	43.841	0.140	45.000	45.429
MJ45 × 2	4G5G	43.089	43.389	43.739	43.879	0.140	45.038	45.467
MJ45 × 3	4H5H	42.077	42.477	43.051	43.221	0.170	45.000	45.603
MJ45 × 3	4G5G	42.125	42.525	43.099	43.269	0.170	45.048	45.651
MJ48 × 1.5	4H5H	46.539	46.775	47.026	47.158	0.132	48.000	48.349
MJ48 × 1.5	4G5G	46.571	46.807	47.058	47.190	0.132	48.032	48.381
MJ48 × 2	4H5H	46.051	46.351	46.701	46.851	0.150	48.000	48.439
MJ48 × 2	4G5G	46.089	46.389	46.739	46.889	0.150	48.038	48.477
MJ48 × 3	4H5H	45.077	45.477	46.051	46.231	0.180	48.000	48.613
MJ48 × 3	4G5G	45.125	45.525	46.099	46.279	0.180	48.048	48.661
MJ48 × 5	4H5H	43.129	43.689	44.752	44.964	0.212	48.000	48.933
MJ48 × 5	4G5G	43.200	43.760	44.823	45.035	0.212	48.071	49.004
MJ50 × 1.5	4H5H	48.539	48.775	49.026	49.158	0.132	50.000	50.349
MJ50 × 1.5	4G5G	48.571	48.807	49.058	49.190	0.132	50.032	50.381
MJ50 × 2	4H5H	48.051	48.351	48.701	48.851	0.150	50.000	50.439
MJ50 × 2	4G5G	48.089	48.389	48.739	48.889	0.150	50.038	50.477
MJ50 × 3	4H5H	47.077	47.477	48.051	48.231	0.180	50.000	50.613
MJ50 × 3	4G5G	47.125	47.525	48.099	48.279	0.180	50.048	50.661
MJ52 × 1.5	4H5H	50.539	50.775	51.026	51.158	0.132	52.000	52.349
MJ52 × 1.5	4G5G	50.571	50.807	51.058	51.190	0.132	52.032	52.381
MJ52 × 2	4H5H	50.051	50.351	50.701	50.851	0.150	52.000	52.439
MJ52 × 2	4G5G	50.089	50.389	50.739	50.889	0.150	52.038	52.477
MJ52 × 3	4H5H	49.077	49.477	50.051	50.231	0.180	52.000	52.613
MJ52 × 3	4G5G	49.125	49.525	50.099	50.279	0.180	52.048	52.661

Copyright ASME International
Provided by IHS under license with ASME
No reproduction or networking permitted without license from IHS
Not for Resale

TABLE 7 LIMITING DIMENSIONS OF METRIC J SCREW THREAD STANDARD SERIES, mm (CONT'D)

External Threads								
Basic Thread Designation	Tolerance Class	Major Diameter, d		Pitch Diameter, d_2			Minor Diameter, d_3	
		Max.	Min.	Max.	Min.	Tolerance	Max.	Min.
MJ55 x 1.5	4h6h	55.000	54.764	54.026	53.926	0.100	53.268	53.077
MJ55 x 1.5	4g6g	54.968	54.732	53.994	53.894	0.100	53.236	53.045
MJ55 x 2	4h6h	55.000	54.720	53.701	53.589	0.112	52.691	52.457
MJ55 x 2	4g6g	54.962	54.682	53.663	53.551	0.112	52.653	52.419
MJ55 x 3	4h6h	55.000	54.625	53.051	52.919	0.132	51.536	51.222
MJ55 x 3	4g6g	54.952	54.577	53.003	52.871	0.132	51.488	51.174
MJ56 x 1.5	4h6h	56.000	55.764	55.026	54.926	0.100	54.268	54.077
MJ56 x 1.5	4g6g	55.968	55.732	54.994	54.894	0.100	54.236	54.045
MJ56 x 2	4h6h	56.000	55.720	54.701	54.589	0.112	53.691	53.457
MJ56 x 2	4g6g	55.962	55.682	54.663	54.551	0.112	53.653	53.419
MJ56 x 3	4h6h	56.000	55.625	54.051	53.919	0.132	52.536	52.222
MJ56 x 3	4g6g	55.952	55.577	54.003	53.871	0.132	52.488	52.174
MJ56 x 5.5	4h6h	56.000	55.440	52.428	52.258	0.170	49.649	49.146
MJ56 x 5.5	4g6g	55.925	55.365	52.353	52.183	0.170	49.574	49.071
MJ58 x 1.5	4h6h	58.000	57.764	57.026	56.926	0.100	56.268	56.077
MJ58 x 1.5	4g6g	57.968	57.732	56.994	56.894	0.100	56.236	56.045
MJ58 x 2	4h6h	58.000	57.720	56.701	56.589	0.112	55.691	55.457
MJ58 x 2	4g6g	57.962	57.682	56.663	56.551	0.112	55.653	55.419
MJ58 x 3	4h6h	58.000	57.625	56.051	55.919	0.132	54.536	54.222
MJ58 x 3	4g6g	57.952	57.577	56.003	55.871	0.132	54.488	54.174
MJ60 x 1.5	4h6h	60.000	59.764	59.026	58.926	0.100	58.268	58.077
MJ60 x 1.5	4g6g	59.968	59.732	58.994	58.894	0.100	58.236	58.045
MJ60 x 2	4h6h	60.000	59.720	58.701	58.589	0.112	57.691	57.457
MJ60 x 2	4g6g	59.962	59.682	58.663	58.551	0.112	57.653	57.419
MJ60 x 3	4h6h	60.000	59.625	58.051	57.919	0.132	56.536	56.222
MJ60 x 3	4g6g	59.952	59.577	58.003	57.871	0.132	56.488	56.174
MJ62 x 1.5	4h6h	62.000	61.764	61.026	60.926	0.100	60.268	60.077
MJ62 x 1.5	4g6g	61.968	61.732	60.994	60.894	0.100	60.236	60.045
MJ62 x 2	4h6h	62.000	61.720	60.701	60.589	0.112	59.691	59.457
MJ62 x 2	4g6g	61.962	61.682	60.663	60.551	0.112	59.653	59.419
MJ62 x 3	4h6h	62.000	61.625	60.051	59.919	0.132	58.536	58.222
MJ62 x 3	4g6g	61.952	61.577	60.003	59.871	0.132	58.488	58.174
MJ64 x 1.5	4h6h	64.000	63.764	63.026	62.926	0.100	62.268	62.077
MJ64 x 1.5	4g6g	63.968	63.732	62.994	62.894	0.100	62.236	62.045
MJ64 x 2	4h6h	64.000	63.720	62.701	62.589	0.112	61.691	61.457
MJ64 x 2	4g6g	63.962	63.682	62.663	62.551	0.112	61.653	61.419
MJ64 x 3	4h6h	64.000	63.625	62.051	61.919	0.132	60.536	60.222
MJ64 x 3	4g6g	63.952	63.577	62.003	61.871	0.132	60.488	60.174
MJ64 x 6	4h6h	64.000	63.400	60.103	59.923	0.180	57.072	56.528
MJ64 x 6	4g6g	63.920	63.320	60.023	59.843	0.180	56.992	56.448
MJ65 x 1.5	4h6h	65.000	64.764	64.026	63.926	0.100	63.268	63.077
MJ65 x 1.5	4g6g	64.968	64.732	63.994	63.894	0.100	63.236	63.045
MJ65 x 2	4h6h	65.000	64.720	63.701	63.589	0.112	62.691	62.457
MJ65 x 2	4g6g	64.962	64.682	63.663	63.551	0.112	62.653	62.419
MJ65 x 3	4h6h	65.000	64.625	63.051	62.919	0.132	61.536	61.222
MJ65 x 3	4g6g	64.952	64.577	63.003	62.871	0.132	61.488	61.174

Copyright ASME International
Provided by IHS under license with ASME
No reproduction or networking permitted without license from IHS
Not for Resale

TABLE 7 LIMITING DIMENSIONS OF METRIC J SCREW THREAD STANDARD SERIES, mm (CONT'D)

Internal Threads								
Basic Thread Designation	Tolerance Class	Minor Diameter, D_1		Pitch Diameter, D_2			Major Diameter, D	
		Min.	Max.	Min.	Max.	Tolerance	Min.	Max.
MJ55 × 1.5	4H5H	53.539	53.775	54.026	54.158	0.132	55.000	55.349
MJ55 × 1.5	4G5G	53.571	53.807	54.058	54.190	0.132	55.032	55.381
MJ55 × 2	4H5H	53.051	53.351	53.701	53.851	0.150	55.000	55.439
MJ55 × 2	4G5G	53.089	53.389	53.739	53.889	0.150	55.038	55.477
MJ55 × 3	4H5H	52.077	52.477	53.051	53.231	0.180	55.000	55.613
MJ55 × 3	4G5G	52.125	52.525	53.099	53.279	0.180	55.048	55.661
MJ56 × 1.5	4H5H	54.539	54.775	55.026	55.158	0.132	56.000	56.349
MJ56 × 1.5	4G5G	54.571	54.807	55.058	55.190	0.132	56.032	56.381
MJ56 × 2	4H5H	54.051	54.351	54.701	54.851	0.150	56.000	56.439
MJ56 × 2	4G5G	54.089	54.389	54.739	54.889	0.150	56.038	56.477
MJ56 × 3	4H5H	53.077	53.477	54.051	54.231	0.180	56.000	56.613
MJ56 × 3	4G5G	53.125	53.525	54.099	54.279	0.180	56.048	56.661
MJ56 × 5.5	4H5H	50.641	51.241	52.428	52.652	0.224	56.000	57.018
MJ56 × 5.5	4G5G	50.716	51.316	52.503	52.727	0.224	56.075	57.093
MJ58 × 1.5	4H5H	56.539	56.775	57.026	57.158	0.132	58.000	58.349
MJ58 × 1.5	4G5G	56.571	56.807	57.058	57.190	0.132	58.032	58.381
MJ58 × 2	4H5H	56.051	56.351	56.701	56.851	0.150	58.000	58.439
MJ58 × 2	4G5G	56.089	56.389	56.739	56.889	0.150	58.038	58.477
MJ58 × 3	4H5H	55.077	55.477	56.051	56.231	0.180	58.000	58.613
MJ58 × 3	4G5G	55.125	55.525	56.099	56.279	0.180	58.048	58.661
MJ60 × 1.5	4H5H	58.539	58.775	59.026	59.158	0.132	60.000	60.349
MJ60 × 1.5	4G5G	58.571	58.807	59.058	59.190	0.132	60.032	60.381
MJ60 × 2	4H5H	58.051	58.351	58.701	58.851	0.150	60.000	60.439
MJ60 × 2	4G5G	58.089	58.389	58.739	58.889	0.150	60.038	60.477
MJ60 × 3	4H5H	57.077	57.477	58.051	58.231	0.180	60.000	60.613
MJ60 × 3	4G5G	57.125	57.525	58.099	58.279	0.180	60.048	60.661
MJ62 × 1.5	4H5H	60.539	60.775	61.026	61.158	0.132	62.000	62.349
MJ62 × 1.5	4G5G	60.571	60.807	61.058	61.190	0.132	62.032	62.381
MJ62 × 2	4H5H	60.051	60.351	60.701	60.851	0.150	62.000	62.439
MJ62 × 2	4G5G	60.089	60.389	60.739	60.889	0.150	62.038	62.477
MJ62 × 3	4H5H	59.077	59.477	60.051	60.231	0.180	62.000	62.613
MJ62 × 3	4G5G	59.125	59.525	60.099	60.279	0.180	62.048	62.661
MJ64 × 1.5	4H5H	62.539	62.775	63.026	63.158	0.132	64.000	64.349
MJ64 × 1.5	4G5G	62.571	62.807	63.058	63.190	0.132	64.032	64.381
MJ64 × 2	4H5H	62.051	62.351	62.701	62.851	0.150	64.000	64.439
MJ64 × 2	4G5G	62.089	62.389	62.739	62.889	0.150	64.038	64.477
MJ64 × 3	4H5H	61.077	61.477	62.051	62.231	0.180	64.000	64.613
MJ64 × 3	4G5G	61.125	61.525	62.099	62.279	0.180	64.048	64.661
MJ64 × 6	4H5H	58.154	58.784	60.103	60.339	0.236	64.000	65.102
MJ64 × 6	4G5G	58.234	58.864	60.183	60.419	0.236	64.080	65.182
MJ65 × 1.5	4H5H	63.539	63.775	64.026	64.158	0.132	65.000	65.349
MJ65 × 1.5	4G5G	63.571	63.807	64.058	64.190	0.132	65.032	65.381
MJ65 × 2	4H5H	63.051	63.351	63.701	63.851	0.150	65.000	65.439
MJ65 × 2	4G5G	63.089	63.389	63.739	63.889	0.150	65.038	65.477
MJ65 × 3	4H5H	62.077	62.477	63.051	63.231	0.180	65.000	65.613
MJ65 × 3	4G5G	62.125	62.525	63.099	63.279	0.180	65.048	65.661

Copyright ASME International
Provided by IHS under license with ASME
No reproduction or networking permitted without license from IHS
Not for Resale

TABLE 7 LIMITING DIMENSIONS OF METRIC J SCREW THREAD STANDARD SERIES, mm (CONT'D)

		External Threads						
		Major Diameter, d		Pitch Diameter, d_2			Minor Diameter, d_3	
Basic Thread Designation	Tolerance Class	Max.	Min.	Max.	Min.	Tolerance	Max.	Min.
MJ68 × 1.5	4h6h	68.000	67.764	67.026	66.926	0.100	66.268	66.077
MJ68 × 1.5	4g6g	67.968	67.732	66.994	66.894	0.100	66.236	66.045
MJ68 × 2	4h6h	68.000	67.720	66.701	66.589	0.112	65.691	65.457
MJ68 × 2	4g6g	67.962	67.682	66.663	66.551	0.112	65.653	65.419
MJ68 × 3	4h6h	68.000	67.625	66.051	65.919	0.132	64.536	64.222
MJ68 × 3	4g6g	67.952	67.577	66.003	65.871	0.132	64.488	64.174
MJ70 × 1.5	4h6h	70.000	69.764	69.026	68.926	0.100	68.268	68.077
MJ70 × 1.5	4g6g	69.968	69.732	68.994	68.894	0.100	68.236	68.045
MJ70 × 2	4h6h	70.000	69.720	68.701	68.589	0.112	67.691	67.457
MJ70 × 2	4g6g	69.962	69.682	68.663	68.551	0.112	67.653	67.419
MJ70 × 3	4h6h	70.000	69.625	68.051	67.919	0.132	66.536	66.222
MJ70 × 3	4g6g	69.952	69.577	68.003	67.871	0.132	66.488	66.174
MJ72 × 1.5	4h6h	72.000	71.764	71.026	70.926	0.100	70.268	70.077
MJ72 × 1.5	4g6g	71.968	71.732	70.994	70.894	0.100	70.236	70.045
MJ72 × 2	4h6h	72.000	71.720	70.701	70.589	0.112	69.691	69.457
MJ72 × 2	4g6g	71.962	71.682	70.663	70.551	0.112	69.653	69.419
MJ72 × 3	4h6h	72.000	71.625	70.051	69.919	0.132	68.536	68.222
MJ72 × 3	4g6g	71.952	71.577	70.003	69.871	0.132	68.488	68.174
MJ72 × 6	4h6h	72.000	71.400	68.103	67.923	0.180	65.072	64.528
MJ72 × 6	4g6g	71.920	71.320	68.023	67.843	0.180	64.992	64.448
MJ75 × 1.5	4h6h	75.000	74.764	74.026	73.926	0.100	73.268	73.077
MJ75 × 1.5	4g6g	74.968	74.732	73.994	73.894	0.100	73.236	73.045
MJ75 × 2	4h6h	75.000	74.720	73.701	73.589	0.112	72.691	72.457
MJ75 × 2	4g6g	74.962	74.682	73.663	73.551	0.112	72.653	72.419
MJ75 × 3	4h6h	75.000	74.625	73.051	72.919	0.132	71.536	71.222
MJ75 × 3	4g6g	74.952	74.577	73.003	72.871	0.132	71.488	71.174
MJ76 × 1.5	4h6h	76.000	75.764	75.026	74.926	0.100	74.268	74.077
MJ76 × 1.5	4g6g	75.968	75.732	74.994	74.894	0.100	74.236	74.045
MJ76 × 2	4h6h	76.000	75.720	74.701	74.589	0.112	73.691	73.457
MJ76 × 2	4g6g	75.962	75.682	74.663	74.551	0.112	73.653	73.419
MJ76 × 3	4h6h	76.000	75.625	74.051	73.919	0.132	72.536	72.222
MJ76 × 3	4g6g	75.952	75.577	74.003	73.871	0.132	72.488	72.174
MJ78 × 1.5	4h6h	78.000	77.764	77.026	76.926	0.100	76.268	76.077
MJ78 × 1.5	4g6g	77.968	77.732	76.994	76.894	0.100	76.236	76.045
MJ78 × 2	4h6h	78.000	77.720	76.701	76.589	0.112	75.691	75.457
MJ78 × 2	4g6g	77.962	77.682	76.663	76.551	0.112	75.653	75.419
MJ78 × 3	4h6h	78.000	77.625	76.051	75.919	0.132	74.536	74.222
MJ78 × 3	4g6g	77.952	77.577	76.003	75.871	0.132	74.488	74.174
MJ80 × 1.5	4h6h	80.000	79.764	79.026	78.926	0.100	78.268	78.077
MJ80 × 1.5	4g6g	79.968	79.732	78.994	78.894	0.100	78.236	78.045
MJ80 × 2	4h6h	80.000	79.720	78.701	78.589	0.112	77.691	77.457
MJ80 × 2	4g6g	79.962	79.682	78.663	78.551	0.112	77.653	77.419
MJ80 × 3	4h6h	80.000	79.625	78.051	77.919	0.132	76.536	76.222
MJ80 × 3	4g6g	79.952	79.577	78.003	77.871	0.132	76.488	76.174
MJ80 × 6	4h6h	80.000	79.400	76.103	75.923	0.180	73.072	72.528
MJ80 × 6	4g6g	79.920	79.320	76.023	75.843	0.180	72.992	72.448

Copyright ASME International
Provided by IHS under license with ASME
No reproduction or networking permitted without license from IHS

Not for Resale

TABLE 7 LIMITING DIMENSIONS OF METRIC J SCREW THREAD STANDARD SERIES, mm (CONT'D)

Internal Threads								
Basic Thread Designation	Tolerance Class	Minor Diameter, D_1		Pitch Diameter, D_2			Major Diameter, D	
		Min.	Max.	Min.	Max.	Tolerance	Min.	Max.
MJ68 × 1.5	4H5H	66.539	66.775	67.026	67.158	0.132	68.000	68.349
MJ68 × 1.5	4G5G	66.571	66.807	67.058	67.190	0.132	68.032	68.381
MJ68 × 2	4H5H	66.051	66.351	66.701	66.851	0.150	68.000	68.439
MJ68 × 2	4G5G	66.089	66.389	66.739	66.889	0.150	68.038	68.477
MJ68 × 3	4H5H	65.077	65.477	66.051	66.231	0.180	68.000	68.613
MJ68 × 3	4G5G	65.125	65.525	66.099	66.279	0.180	68.048	68.661
MJ70 × 1.5	4H5H	68.539	68.775	69.026	69.158	0.132	70.000	70.349
MJ70 × 1.5	4G5G	68.571	68.807	69.058	69.190	0.132	70.032	70.381
MJ70 × 2	4H5H	68.051	68.351	68.701	68.851	0.150	70.000	70.439
MJ70 × 2	4G5G	68.089	68.389	68.739	68.889	0.150	70.038	70.477
MJ70 × 3	4H5H	67.077	67.477	68.051	68.231	0.180	70.000	70.613
MJ70 × 3	4G5G	67.125	67.525	68.099	68.279	0.180	70.048	70.661
MJ72 × 1.5	4H5H	70.539	70.775	71.026	71.158	0.132	72.000	72.349
MJ72 × 1.5	4G5G	70.571	70.807	71.058	71.190	0.132	72.032	72.381
MJ72 × 2	4H5H	70.051	70.351	70.701	70.851	0.150	72.000	72.439
MJ72 × 2	4G5G	70.089	70.389	70.739	70.889	0.150	72.038	72.477
MJ72 × 3	4H5H	69.077	69.477	70.051	70.231	0.180	72.000	72.613
MJ72 × 3	4G5G	69.125	69.525	70.099	70.279	0.180	72.048	72.661
MJ72 × 6	4H5H	66.154	66.784	68.103	68.339	0.236	72.000	73.102
MJ72 × 6	4G5G	66.234	66.864	68.183	68.419	0.236	72.080	73.182
MJ75 × 1.5	4H5H	73.539	73.775	74.026	74.158	0.132	75.000	75.349
MJ75 × 1.5	4G5G	73.571	73.807	74.058	74.190	0.132	75.032	75.381
MJ75 × 2	4H5H	73.051	73.351	73.701	73.851	0.150	75.000	75.439
MJ75 × 2	4G5G	73.089	73.389	73.739	73.889	0.150	75.038	75.477
MJ75 × 3	4H5H	72.077	72.477	73.051	73.231	0.180	75.000	75.613
MJ75 × 3	4G5G	72.125	72.525	73.099	73.279	0.180	75.048	75.661
MJ76 × 1.5	4H5H	74.539	74.775	75.026	75.158	0.132	76.000	76.349
MJ76 × 1.5	4G5G	74.571	74.807	75.058	75.190	0.132	76.032	76.381
MJ76 × 2	4H5H	74.051	74.351	74.701	74.851	0.150	76.000	76.439
MJ76 × 2	4G5G	74.089	74.389	74.739	74.889	0.150	76.038	76.477
MJ76 × 3	4H5H	73.077	73.477	74.051	74.231	0.180	76.000	76.613
MJ76 × 3	4G5G	73.125	73.525	74.099	74.279	0.180	76.048	76.661
MJ78 × 1.5	4H5H	76.539	76.775	77.026	77.158	0.132	78.000	78.349
MJ78 × 1.5	4G5G	76.571	76.807	77.058	77.190	0.132	78.032	78.381
MJ78 × 2	4H5H	76.051	76.351	76.701	76.851	0.150	78.000	78.439
MJ78 × 2	4G5G	76.089	76.389	76.739	76.889	0.150	78.038	78.477
MJ78 × 3	4H5H	75.077	75.477	76.051	76.231	0.180	78.000	78.613
MJ78 × 3	4G5G	75.125	75.525	76.099	76.279	0.180	78.048	78.661
MJ80 × 1.5	4H5H	78.539	78.775	79.026	79.158	0.132	80.000	80.349
MJ80 × 1.5	4G5G	78.571	78.807	79.058	79.190	0.132	80.032	80.381
MJ80 × 2	4H5H	78.051	78.351	78.701	78.851	0.150	80.000	80.439
MJ80 × 2	4G5G	78.089	78.389	78.739	78.889	0.150	80.038	80.477
MJ80 × 3	4H5H	77.077	77.477	78.051	78.231	0.180	80.000	80.613
MJ80 × 3	4G5G	77.125	77.525	78.099	78.279	0.180	80.048	80.661
MJ80 × 6	4H5H	74.154	74.784	76.103	76.339	0.236	80.000	81.102
MJ80 × 6	4G5G	74.234	74.864	76.183	76.419	0.236	80.080	81.182

Copyright ASME International
Provided by IHS under license with ASME
No reproduction or networking permitted without license from IHS Not for Resale

TABLE 7 LIMITING DIMENSIONS OF METRIC J SCREW THREAD STANDARD SERIES, mm (CONT'D)

External Threads								
Basic Thread Designation	Tolerance Class	Major Diameter, d		Pitch Diameter, d_2			Minor Diameter, d_3	
		Max.	Min.	Max.	Min.	Tolerance	Max.	Min.
MJ82 × 1.5	4h6h	82.000	81.764	81.026	80.926	0.100	80.268	80.077
MJ82 × 1.5	4g6g	81.968	81.732	80.994	80.894	0.100	80.236	80.045
MJ82 × 2	4h6h	82.000	81.720	80.701	80.589	0.112	79.691	79.457
MJ82 × 2	4g6g	81.962	81.682	80.663	80.551	0.112	79.653	79.419
MJ82 × 3	4h6h	82.000	81.625	80.051	79.919	0.132	78.536	78.222
MJ82 × 3	4g6g	81.952	81.577	80.003	79.871	0.132	78.488	78.174
MJ85 × 1.5	4h6h	85.000	84.764	84.026	83.926	0.100	83.268	83.077
MJ85 × 1.5	4g6g	84.968	84.732	83.994	83.894	0.100	83.236	83.045
MJ85 × 2	4h6h	85.000	84.720	83.701	83.589	0.112	82.691	82.457
MJ85 × 2	4g6g	84.962	84.682	83.663	83.551	0.112	82.653	82.419
MJ85 × 3	4h6h	85.000	84.625	83.051	82.919	0.132	81.536	81.222
MJ85 × 3	4g6g	84.952	84.577	83.003	82.871	0.132	81.488	81.174
MJ90 × 1.5	4h6h	90.000	89.764	89.026	88.926	0.100	88.268	88.077
MJ90 × 1.5	4g6g	89.968	89.732	88.994	88.894	0.100	88.236	88.045
MJ90 × 2	4h6h	90.000	89.720	88.701	88.589	0.112	87.691	87.457
MJ90 × 2	4g6g	89.962	89.682	88.663	88.551	0.112	87.653	87.419
MJ90 × 3	4h6h	90.000	89.625	88.051	87.919	0.132	86.536	86.222
MJ90 × 3	4g6g	89.952	89.577	88.003	87.871	0.132	86.488	86.174
MJ90 × 6	4h6h	90.000	89.400	86.103	85.923	0.180	83.072	82.528
MJ90 × 6	4g6g	89.920	89.320	86.023	85.843	0.180	82.992	82.448
MJ95 × 1.5	4h6h	95.000	94.764	94.026	93.921	0.105	93.268	93.072
MJ95 × 1.5	4g6g	94.968	94.732	93.994	93.889	0.105	93.236	93.040
MJ95 × 2	4h6h	95.000	94.720	93.701	93.583	0.118	92.691	92.451
MJ95 × 2	4g6g	94.962	94.682	93.663	93.545	0.118	92.653	92.413
MJ95 × 3	4h6h	95.000	94.625	93.051	92.911	0.140	91.536	91.214
MJ95 × 3	4g6g	94.952	94.577	93.003	92.863	0.140	91.488	91.166
MJ100 × 1.5	4h6h	100.000	99.764	99.026	98.921	0.105	98.268	98.072
MJ100 × 1.5	4g6g	99.968	99.732	98.994	98.889	0.105	98.236	98.040
MJ100 × 2	4h6h	100.000	99.720	98.701	98.583	0.118	97.691	97.451
MJ100 × 2	4g6g	99.962	99.682	98.663	98.545	0.118	97.653	97.413
MJ100 × 3	4h6h	100.000	99.625	98.051	97.911	0.140	96.536	96.214
MJ100 × 3	4g6g	99.952	99.577	98.003	97.863	0.140	96.488	96.166
MJ100 × 6	4h6h	100.000	99.400	96.103	95.913	0.190	93.072	92.518
MJ100 × 6	4g6g	99.920	99.320	96.023	95.833	0.190	92.992	92.438
MJ105 × 1.5	4h6h	105.000	104.764	104.026	103.921	0.105	103.268	103.072
MJ105 × 1.5	4g6g	104.968	104.732	103.994	103.889	0.105	103.236	103.040
MJ105 × 2	4h6h	105.000	104.720	103.701	103.583	0.118	102.691	102.451
MJ105 × 2	4g6g	104.962	104.682	103.663	103.545	0.118	102.653	102.413
MJ105 × 3	4h6h	105.000	104.625	103.051	102.911	0.140	101.536	101.214
MJ105 × 3	4g6g	104.952	104.577	103.003	102.863	0.140	101.488	101.166
MJ110 × 1.5	4h6h	110.000	109.764	109.026	108.921	0.105	108.268	108.072
MJ110 × 1.5	4g6g	109.968	109.732	108.994	108.889	0.105	108.236	108.040
MJ110 × 2	4h6h	110.000	109.720	108.701	108.583	0.118	107.691	107.451
MJ110 × 2	4g6g	109.962	109.682	108.663	108.545	0.118	107.653	107.413
MJ110 × 3	4h6h	110.000	109.625	108.051	107.911	0.140	106.536	106.214
MJ110 × 3	4g6g	109.952	109.577	108.003	107.863	0.140	106.488	106.166

Copyright ASME International
Provided by IHS under license with ASME
No reproduction or networking permitted without license from IHS
Not for Resale

TABLE 7 LIMITING DIMENSIONS OF METRIC J SCREW THREAD STANDARD SERIES, mm (CONT'D)

Internal Threads								
Basic Thread Designation	Tolerance Class	Minor Diameter, D_1		Pitch Diameter, D_2			Major Diameter, D	
		Min.	Max.	Min.	Max.	Tolerance	Min.	Max.
MJ82 × 1.5	4H5H	80.539	80.775	81.026	81.158	0.132	82.000	82.349
MJ82 × 1.5	4G5G	80.571	80.807	81.058	81.190	0.132	82.032	82.381
MJ82 × 2	4H5H	80.051	80.351	80.701	80.851	0.150	82.000	82.439
MJ82 × 2	4G5G	80.089	80.389	80.739	80.889	0.150	82.038	82.477
MJ82 × 3	4H5H	79.077	79.477	80.051	80.231	0.180	82.000	82.613
MJ82 × 3	4G5G	79.125	79.525	80.099	80.279	0.180	82.048	82.661
MJ85 × 1.5	4H5H	83.539	83.775	84.026	84.158	0.132	85.000	85.349
MJ85 × 1.5	4G5G	83.571	83.807	84.058	84.190	0.132	85.032	85.381
MJ85 × 2	4H5H	83.051	83.351	83.701	83.851	0.150	85.000	85.439
MJ85 × 2	4G5G	83.089	83.389	83.739	83.889	0.150	85.038	85.477
MJ85 × 3	4H5H	82.077	82.477	83.051	83.231	0.180	85.000	85.613
MJ85 × 3	4G5G	82.125	82.525	83.099	83.279	0.180	85.048	85.661
MJ90 × 1.5	4H5H	88.539	88.775	89.026	89.158	0.132	90.000	90.349
MJ90 × 1.5	4G5G	88.571	88.807	89.058	89.190	0.132	90.032	90.381
MJ90 × 2	4H5H	88.051	88.351	88.701	88.851	0.150	90.000	90.439
MJ90 × 2	4G5G	88.089	88.389	88.739	88.889	0.150	90.038	90.477
MJ90 × 3	4H5H	87.077	87.477	88.051	88.231	0.180	90.000	90.613
MJ90 × 3	4G5G	87.125	87.525	88.099	88.279	0.180	90.048	90.661
MJ90 × 6	4H5H	84.154	84.784	86.103	86.339	0.236	90.000	91.102
MJ90 × 6	4G5G	84.234	84.864	86.183	86.419	0.236	90.080	91.182
MJ95 × 1.5	4H5H	93.539	93.775	94.026	94.168	0.142	95.000	95.359
MJ95 × 1.5	4G5G	93.571	93.807	94.058	94.200	0.142	95.032	95.391
MJ95 × 2	4H5H	93.051	93.351	93.701	93.861	0.160	95.000	95.449
MJ95 × 2	4G5G	93.089	93.389	93.739	93.899	0.160	95.038	95.487
MJ95 × 3	4H5H	92.077	92.477	93.051	93.241	0.190	95.000	95.623
MJ95 × 3	4G5G	92.125	92.525	93.099	93.289	0.190	95.048	95.671
MJ100 × 1.5	4H5H	98.539	98.775	99.026	99.168	0.142	100.000	100.359
MJ100 × 1.5	4G5G	98.571	98.807	99.058	99.200	0.142	100.032	100.391
MJ100 × 2	4H5H	98.051	98.351	98.701	98.861	0.160	100.000	100.449
MJ100 × 2	4G5G	98.089	98.389	98.739	98.899	0.160	100.038	100.487
MJ100 × 3	4H5H	97.077	97.477	98.051	98.241	0.190	100.000	100.623
MJ100 × 3	4G5G	97.125	97.525	98.099	98.289	0.190	100.048	100.671
MJ100 × 6	4H5H	94.154	94.784	96.103	96.353	0.250	100.000	101.116
MJ100 × 6	4G5G	94.234	94.864	96.183	96.433	0.250	100.080	101.196
MJ105 × 1.5	4H5H	103.539	103.775	104.026	104.168	0.142	105.000	105.359
MJ105 × 1.5	4G5G	103.571	103.807	104.058	104.200	0.142	105.032	105.391
MJ105 × 2	4H5H	103.051	103.351	103.701	103.861	0.160	105.000	105.449
MJ105 × 2	4G5G	103.089	103.389	103.739	103.899	0.160	105.038	105.487
MJ105 × 3	4H5H	102.077	102.477	103.051	103.241	0.190	105.000	105.623
MJ105 × 3	4G5G	102.125	102.525	103.099	103.289	0.190	105.048	105.671
MJ110 × 1.5	4H5H	108.539	108.775	109.026	109.168	0.142	110.000	110.359
MJ110 × 1.5	4G5G	108.571	108.807	109.058	109.200	0.142	110.032	110.391
MJ110 × 2	4H5H	108.051	108.351	108.701	108.861	0.160	110.000	110.449
MJ110 × 2	4G5G	108.089	108.389	108.739	108.899	0.160	110.038	110.487
MJ110 × 3	4H5H	107.077	107.477	108.051	108.241	0.190	110.000	110.623
MJ110 × 3	4G5G	107.125	107.525	108.099	108.289	0.190	110.048	110.671

Copyright ASME International
Provided by IHS under license with ASME
No reproduction or networking permitted without license from IHS
Not for Resale

TABLE 7 LIMITING DIMENSIONS OF METRIC J SCREW THREAD STANDARD SERIES, mm (CONT'D)

External Threads								
Basic Thread Designation	Tolerance Class	Major Diameter, d		Pitch Diameter, d_2			Minor Diameter, d_3	
		Max.	Min.	Max.	Min.	Tolerance	Max.	Min.
MJ115 × 1.5	4h6h	115.000	114.764	114.026	113.921	0.105	113.268	113.072
MJ115 × 1.5	4g6g	114.968	114.732	113.994	113.889	0.105	113.236	113.040
MJ115 × 2	4h6h	115.000	114.720	113.701	113.583	0.118	112.691	112.451
MJ115 × 2	4g6g	114.962	114.682	113.663	113.545	0.118	112.653	112.413
MJ115 × 3	4h6h	115.000	114.625	113.051	112.911	0.140	111.536	111.214
MJ115 × 3	4g6g	114.952	114.577	113.003	112.863	0.140	111.488	111.166
MJ120 × 1.5	4h6h	120.000	119.764	119.026	118.921	0.105	118.268	118.072
MJ120 × 1.5	4g6g	119.968	119.732	118.994	118.889	0.105	118.236	118.040
MJ120 × 2	4h6h	120.000	119.720	118.701	118.583	0.118	117.691	117.451
MJ120 × 2	4g6g	119.962	119.682	118.663	118.545	0.118	117.653	117.413
MJ120 × 3	4h6h	120.000	119.625	118.051	117.911	0.140	116.536	116.214
MJ120 × 3	4g6g	119.952	119.577	118.003	117.863	0.140	116.488	116.166
MJ125 × 1.5	4h6h	125.000	124.764	124.026	123.921	0.105	123.268	123.072
MJ125 × 1.5	4g6g	124.968	124.732	123.994	123.889	0.105	123.236	123.040
MJ125 × 2	4h6h	125.000	124.720	123.701	123.583	0.118	122.691	122.451
MJ125 × 2	4g6g	124.962	124.682	123.663	123.545	0.118	122.653	122.413
MJ125 × 3	4h6h	125.000	124.625	123.051	122.911	0.140	121.536	121.214
MJ125 × 3	4g6g	124.952	124.577	123.003	122.863	0.140	121.488	121.166
MJ130 × 1.5	4h6h	130.000	129.764	129.026	128.921	0.105	128.268	128.072
MJ130 × 1.5	4g6g	129.968	129.732	128.994	128.889	0.105	128.236	128.040
MJ130 × 2	4h6h	130.000	129.720	128.701	128.583	0.118	127.691	127.451
MJ130 × 2	4g6g	129.962	129.682	128.663	128.545	0.118	127.653	127.413
MJ130 × 3	4h6h	130.000	129.625	128.051	127.911	0.140	126.536	126.214
MJ130 × 3	4g6g	129.952	129.577	128.003	127.863	0.140	126.488	126.166
MJ135 × 1.5	4h6h	135.000	134.764	134.026	133.921	0.105	133.268	133.072
MJ135 × 1.5	4g6g	134.968	134.732	133.994	133.889	0.105	133.236	133.040
MJ135 × 2	4h6h	135.000	134.720	133.701	133.583	0.118	132.691	132.451
MJ135 × 2	4g6g	134.962	134.682	133.663	133.545	0.118	132.653	132.413
MJ135 × 3	4h6h	135.000	134.625	133.051	132.911	0.140	131.536	131.214
MJ135 × 3	4g6g	134.952	134.577	133.003	132.863	0.140	131.488	131.166
MJ140 × 1.5	4h6h	140.000	139.764	139.026	138.921	0.105	138.268	138.072
MJ140 × 1.5	4g6g	139.968	139.732	138.994	138.889	0.105	138.236	138.040
MJ140 × 2	4h6h	140.000	139.720	138.701	138.583	0.118	137.691	137.451
MJ140 × 2	4g6g	139.962	139.682	138.663	138.545	0.118	137.653	137.413
MJ140 × 3	4h6h	140.000	139.625	138.051	137.911	0.140	136.536	136.214
MJ140 × 3	4g6g	139.952	139.577	138.003	137.863	0.140	136.488	136.166
MJ145 × 1.5	4h6h	145.000	144.764	144.026	143.921	0.105	143.268	143.072
MJ145 × 1.5	4g6g	144.968	144.732	143.994	143.889	0.105	143.236	143.040
MJ145 × 2	4h6h	145.000	144.720	143.701	143.583	0.118	142.691	142.451
MJ145 × 2	4g6g	144.962	144.682	143.663	143.545	0.118	142.653	142.413
MJ145 × 3	4h6h	145.000	144.625	143.051	142.911	0.140	141.536	141.214
MJ145 × 3	4g6g	144.952	144.577	143.003	142.863	0.140	141.488	141.166
MJ150 × 1.5	4h6h	150.000	149.764	149.026	148.921	0.105	148.268	148.072
MJ150 × 1.5	4g6g	149.968	149.732	148.994	148.889	0.105	148.236	148.040
MJ150 × 2	4h6h	150.000	149.720	148.701	148.583	0.118	147.691	147.451
MJ150 × 2	4g6g	149.962	149.682	148.663	148.545	0.118	147.653	147.413
MJ150 × 3	4h6h	150.000	149.625	148.051	147.911	0.140	146.536	146.214
MJ150 × 3	4g6g	149.952	149.577	148.003	147.863	0.140	146.488	146.166

Copyright ASME International
Provided by IHS under license with ASME
No reproduction or networking permitted without license from IHS

Not for Resale

TABLE 7 LIMITING DIMENSIONS OF METRIC J SCREW THREAD STANDARD SERIES, mm (CONT'D)

		Internal Threads						
		Minor Diameter, D_1		Pitch Diameter, D_2			Major Diameter, D	
Basic Thread Designation	Tolerance Class	Min.	Max.	Min.	Max.	Tolerance	Min.	Max.
MJ115 × 1.5	4H5H	113.539	113.775	114.026	114.168	0.142	115.000	115.359
MJ115 × 1.5	4G5G	113.571	113.807	114.058	114.200	0.142	115.032	115.391
MJ115 × 2	4H5H	113.051	113.351	113.701	113.861	0.160	115.000	115.449
MJ115 × 2	4G5G	113.089	113.389	113.739	113.899	0.160	115.038	115.487
MJ115 × 3	4H5H	112.077	112.477	113.051	113.241	0.190	115.000	115.623
MJ115 × 3	4G5G	112.125	112.525	113.099	113.289	0.190	115.048	115.671
MJ120 × 1.5	4H5H	118.539	118.775	119.026	119.168	0.142	120.000	120.359
MJ120 × 1.5	4G5G	118.571	118.807	119.058	119.200	0.142	120.032	120.391
MJ120 × 2	4H5H	118.051	118.351	118.701	118.861	0.160	120.000	120.449
MJ120 × 2	4G5G	118.089	118.389	118.739	118.899	0.160	120.038	120.487
MJ120 × 3	4H5H	117.077	117.477	118.051	118.241	0.190	120.000	120.623
MJ120 × 3	4G5G	117.125	117.525	118.099	118.289	0.190	120.048	120.671
MJ125 × 1.5	4H5H	123.539	123.775	124.026	124.168	0.142	125.000	125.359
MJ125 × 1.5	4G5G	123.571	123.807	124.058	124.200	0.142	125.032	125.391
MJ125 × 2	4H5H	123.051	123.351	123.701	123.861	0.160	125.000	125.449
MJ125 × 2	4G5G	123.089	123.389	123.739	123.899	0.160	125.038	125.487
MJ125 × 3	4H5H	122.077	122.477	123.051	123.241	0.190	125.000	125.623
MJ125 × 3	4G5G	122.125	122.525	123.099	123.289	0.190	125.048	125.671
MJ130 × 1.5	4H5H	128.539	128.775	129.026	129.168	0.142	130.000	130.359
MJ130 × 1.5	4G5G	128.571	128.807	129.058	129.200	0.142	130.032	130.391
MJ130 × 2	4H5H	128.051	128.351	128.701	128.861	0.160	130.000	130.449
MJ130 × 2	4G5G	128.089	128.389	128.739	128.899	0.160	130.038	130.487
MJ130 × 3	4H5H	127.077	127.477	128.051	128.241	0.190	130.000	130.623
MJ130 × 3	4G5G	127.125	127.525	128.099	128.289	0.190	130.048	130.671
MJ135 × 1.5	4H5H	133.539	133.775	134.026	134.168	0.142	135.000	135.359
MJ135 × 1.5	4G5G	133.571	133.807	134.058	134.200	0.142	135.032	135.391
MJ135 × 2	4H5H	133.051	133.351	133.701	133.861	0.160	135.000	135.449
MJ135 × 2	4G5G	133.089	133.389	133.739	133.899	0.160	135.038	135.487
MJ135 × 3	4H5H	132.077	132.477	133.051	133.241	0.190	135.000	135.623
MJ135 × 3	4G5G	132.125	132.525	133.099	133.289	0.190	135.048	135.671
MJ140 × 1.5	4H5H	138.539	138.775	139.026	139.168	0.142	140.000	140.359
MJ140 × 1.5	4G5G	138.571	138.807	139.058	139.200	0.142	140.032	140.391
MJ140 × 2	4H5H	138.051	138.351	138.701	138.861	0.160	140.000	140.449
MJ140 × 2	4G5G	138.089	138.389	138.739	138.899	0.160	140.038	140.487
MJ140 × 3	4H5H	137.077	137.477	138.051	138.241	0.190	140.000	140.623
MJ140 × 3	4G5G	137.125	137.525	138.099	138.289	0.190	140.048	140.671
MJ145 × 1.5	4H5H	143.539	143.775	144.026	144.168	0.142	145.000	145.359
MJ145 × 1.5	4G5G	143.571	143.807	144.058	144.200	0.142	145.032	145.391
MJ145 × 2	4H5H	143.051	143.351	143.701	143.861	0.160	145.000	145.449
MJ145 × 2	4G5G	143.089	143.389	143.739	143.899	0.160	145.038	145.487
MJ145 × 3	4H5H	142.077	142.477	143.051	143.241	0.190	145.000	145.623
MJ145 × 3	4G5G	142.125	142.525	143.099	143.289	0.190	145.048	145.671
MJ150 × 1.5	4H5H	148.539	148.775	149.026	149.168	0.142	150.000	150.359
MJ150 × 1.5	4G5G	148.571	148.807	149.058	149.200	0.142	150.032	150.391
MJ150 × 2	4H5H	148.051	148.351	148.701	148.861	0.160	150.000	150.449
MJ150 × 2	4G5G	148.089	148.389	148.739	148.899	0.160	150.038	150.487
MJ150 × 3	4H5H	147.077	147.477	148.051	148.241	0.190	150.000	150.623
MJ150 × 3	4G5G	147.125	147.525	148.099	148.289	0.190	150.048	150.671

Copyright ASME International
Provided by IHS under license with ASME
No reproduction or networking permitted without license from IHS Not for Resale

TABLE 7 LIMITING DIMENSIONS OF METRIC J SCREW THREAD STANDARD SERIES, mm (CONT'D)

External Threads								
Basic Thread Designation	Tolerance Class	Major Diameter, d		Pitch Diameter, d_2			Minor Diameter, d_3	
		Max.	Min.	Max.	Min.	Tolerance	Max.	Min.
MJ155 × 3	4h6h	155.000	154.625	153.051	152.911	0.140	151.536	151.214
MJ155 × 3	4g6g	154.952	154.577	153.003	152.863	0.140	151.488	151.166
MJ160 × 3	4h6h	160.000	159.625	158.051	157.911	0.140	156.536	156.214
MJ160 × 3	4g6g	159.952	159.577	158.003	157.863	0.140	156.488	156.166
MJ165 × 3	4h6h	165.000	164.625	163.051	162.911	0.140	161.536	161.214
MJ165 × 3	4g6g	164.952	164.577	163.003	162.863	0.140	161.488	161.166
MJ170 × 3	4h6h	170.000	169.625	168.051	167.911	0.140	166.536	166.214
MJ170 × 3	4g6g	169.952	169.577	168.003	167.863	0.140	166.488	166.166
MJ175 × 3	4h6h	175.000	174.625	173.051	172.911	0.140	171.536	171.214
MJ175 × 3	4g6g	174.952	174.577	173.003	172.863	0.140	171.488	171.166
MJ180 × 3	4h6h	180.000	179.625	178.051	177.911	0.140	176.536	176.214
MJ180 × 3	4g6g	179.952	179.577	178.003	177.863	0.140	176.488	176.166
MJ185 × 3	4h6h	185.000	184.625	183.051	182.891	0.160	181.536	181.194
MJ185 × 3	4g6g	184.952	184.577	183.003	182.843	0.160	181.488	181.146
MJ190 × 3	4h6h	190.000	189.625	188.051	187.891	0.160	186.536	186.194
MJ190 × 3	4g6g	189.952	189.577	188.003	187.843	0.160	186.488	186.146
MJ195 × 3	4h6h	195.000	194.625	193.051	192.891	0.160	191.536	191.194
MJ195 × 3	4g6g	194.952	194.577	193.003	192.843	0.160	191.488	191.146
MJ200 × 3	4h6h	200.000	199.625	198.051	197.891	0.160	196.536	196.194
MJ200 × 3	4g6g	199.952	199.577	198.003	197.843	0.160	196.488	196.146

Copyright ASME International
Provided by IHS under license with ASME
No reproduction or networking permitted without license from IHS
Not for Resale

TABLE 7 LIMITING DIMENSIONS OF METRIC J SCREW THREAD STANDARD SERIES, mm (CONT'D)

Internal Threads								
Basic Thread Designation	Tolerance Class	Minor Diameter, D_1		Pitch Diameter, D_2			Major Diameter, D	
		Min.	Max.	Min.	Max.	Tolerance	Min.	Max.
MJ155 × 3	4H5H	152.077	152.477	153.051	153.241	0.190	155.000	155.623
MJ155 × 3	4G5G	152.125	152.525	153.099	153.289	0.190	155.048	155.671
MJ160 × 3	4H5H	157.077	157.477	158.051	158.241	0.190	160.000	160.623
MJ160 × 3	4G5G	157.125	157.525	158.099	158.289	0.190	160.048	160.671
MJ165 × 3	4H5H	162.077	162.477	163.051	163.241	0.190	165.000	165.623
MJ165 × 3	4G5G	162.125	162.525	163.099	163.289	0.190	165.048	165.671
MJ170 × 3	4H5H	167.077	167.477	168.051	168.241	0.190	170.000	170.623
MJ170 × 3	4G5G	167.125	167.525	168.099	168.289	0.190	170.048	170.671
MJ175 × 3	4H5H	172.077	172.477	173.051	173.241	0.190	175.000	175.623
MJ175 × 3	4G5G	172.125	172.525	173.099	173.289	0.190	175.048	175.671
MJ180 × 3	4H5H	177.077	177.477	178.051	178.241	0.190	180.000	180.623
MJ180 × 3	4G5G	177.125	177.525	178.099	178.289	0.190	180.048	180.671
MJ185 × 3	4H5H	182.077	182.477	183.051	183.263	0.212	185.000	185.645
MJ185 × 3	4G5G	182.125	182.525	183.099	183.311	0.212	185.048	185.693
MJ190 × 3	4H5H	187.077	187.477	188.051	188.263	0.212	190.000	190.645
MJ190 × 3	4G5G	187.125	187.525	188.099	188.311	0.212	190.048	190.693
MJ195 × 3	4H5H	192.077	192.477	193.051	193.263	0.212	195.000	195.645
MJ195 × 3	4G5G	192.125	192.525	193.099	193.311	0.212	195.048	195.693
MJ200 × 3	4H5H	197.077	197.477	198.051	198.263	0.212	200.000	200.645
MJ200 × 3	4G5G	197.125	197.525	198.099	198.311	0.212	200.048	200.693

Copyright ASME International
Provided by IHS under license with ASME
No reproduction or networking permitted without license from IHS Not for Resale

TABLE 8 THEORETICAL THREAD PROFILE DATA, mm

Pitch, *P*	Height of Sharp Vee Thread $H = 0.8660254P$	Height of Internal Thread and Depth Of Thread Engagement $\frac{9}{16}H = 0.4871393P$	Height of External Thread $\frac{2}{3}H = 0.5773503P$	Truncation of Internal Thread Major Dia. and External Thread Crest $\frac{1}{8}H = 0.1082532P$	Flat at Internal Thread Major Dia. and External Thread Crest $0.125P$	Truncation of Internal Thread Crest and External Thread Minor Dia. $\frac{5}{16}H = 0.2706329P$	Flat at Internal Thread Crest and External Thread Minor Dia. $0.3125P$
0.35	0.30311	0.17050	0.20207	0.03789	0.04375	0.09472	0.10938
0.4	0.34641	0.19486	0.23094	0.04330	0.05000	0.10825	0.12500
0.45	0.38971	0.21921	0.25981	0.04871	0.05625	0.12178	0.14063
0.5	0.43301	0.24357	0.28868	0.05413	0.06250	0.13532	0.15625
0.6	0.51962	0.29228	0.34641	0.06495	0.07500	0.16238	0.18750
0.7	0.60622	0.34100	0.40415	0.07578	0.08750	0.18944	0.21875
0.75	0.64952	0.36535	0.43301	0.08119	0.09375	0.20297	0.23438
0.8	0.69282	0.38971	0.46188	0.08660	0.10000	0.21651	0.25000
1	0.86603	0.48714	0.57735	0.10825	0.12500	0.27063	0.31250
1.25	1.08253	0.60892	0.72169	0.13532	0.15625	0.33829	0.39063
1.5	1.29904	0.73071	0.86603	0.16238	0.18750	0.40595	0.46875
1.75	1.51554	0.85249	1.01036	0.18944	0.21875	0.47361	0.54688
2	1.73205	0.97428	1.15470	0.21651	0.25000	0.54127	0.62500
2.5	2.16506	1.21785	1.44338	0.27063	0.31250	0.67658	0.78125
3	2.59808	1.46142	1.73205	0.32476	0.37500	0.81190	0.93750
3.5	3.03109	1.70499	2.02073	0.37889	0.43750	0.94722	1.09375
4	3.46410	1.94856	2.30940	0.43301	0.50000	1.08253	1.25000
4.5	3.89711	2.19213	2.59808	0.48714	0.56250	1.21785	1.40625
5	4.33013	2.43570	2.88675	0.54127	0.62500	1.35316	1.56250
5.5	4.76314	2.67927	3.17543	0.59539	0.68750	1.48848	1.71875
6	5.19615	2.92284	3.46410	0.64952	0.75000	1.62380	1.87500

Copyright ASME International
Provided by IHS under license with ASME
No reproduction or networking permitted without license from IHS
Not for Resale

TABLE 8 THEORETICAL THREAD PROFILE DATA, mm

Addendum of External Thread	Twice External Thread Addendum	Difference Between Max. Root Dia. and Max. Pitch Dia.[1] of Internal Thread	Double Height of Internal Thread	Difference Between Max. Pitch Dia.[1] and Max. Root Dia. of External Thread	Difference Between Min. Pitch Dia.[1] and Min. Root Dia. of External Thread	Pitch, *P*
$\frac{3}{8}H$ = 0.3247595*P*	$\frac{3}{4}H$ = 0.6495191*P*	$\frac{11}{12}H$ = 0.7938566*P*	$1\frac{1}{8}H$ = 0.9742786*P*	$\frac{7}{12}H$ = 0.5051815*P*	0.6533358*H* = 0.5658054*P*	
0.11367	0.22733	0.27785	0.34100	0.17681	0.19803	0.35
0.12990	0.25981	0.31754	0.38971	0.20207	0.22632	0.4
0.14614	0.29228	0.35724	0.43843	0.22733	0.25461	0.45
0.16238	0.32476	0.39693	0.48714	0.25259	0.28290	0.5
0.19486	0.38971	0.47631	0.58457	0.30311	0.33948	0.6
0.22733	0.45466	0.55570	0.68200	0.35363	0.39606	0.7
0.24357	0.48714	0.59539	0.73071	0.37889	0.42435	0.75
0.25981	0.51962	0.63509	0.77942	0.40415	0.45264	0.8
0.32476	0.64952	0.79386	0.97428	0.50518	0.56581	1
0.40595	0.81190	0.99232	1.21785	0.63148	0.70726	1.25
0.48714	0.97428	1.19078	1.46142	0.75777	0.84871	1.5
0.56833	1.13666	1.38925	1.70499	0.88407	0.99016	1.75
0.64952	1.29904	1.58771	1.94856	1.01036	1.13161	2
0.81190	1.62380	1.98464	2.43570	1.26295	1.41451	2.5
0.97428	1.94856	2.38157	2.92284	1.51554	1.69742	3
1.13666	2.27332	2.77850	3.40998	1.76814	1.98032	3.5
1.29904	2.59808	3.17543	3.89711	2.02073	2.26322	4
1.46142	2.92284	3.57235	4.38425	2.27332	2.54612	4.5
1.62380	3.24760	3.96928	4.87139	2.52591	2.82903	5
1.78618	3.57235	4.36621	5.35853	2.77850	3.11193	5.5
1.94856	3.89711	4.76314	5.84567	3.03109	3.39483	6

NOTE:
(1) Theoretical pitch diameter rounded to 5 decimal places.

Copyright ASME International
Provided by IHS under license with ASME
No reproduction or networking permitted without license from IHS
Not for Resale

TABLE 9 MAJOR DIAMETER TOLERANCE, EXTERNAL THREAD

Pitch, *P*	Tolerance Grade 6, *Td*
mm	mm
0.35	0.085
0.4	0.095
0.45	0.100
0.5	0.106
0.6	0.125
0.7	0.140
0.75	0.140
0.8	0.150
1	0.180
1.25	0.212
1.5	0.236
1.75	0.265
2	0.280
2.5	0.335
3	0.375
3.5	0.425
4	0.475
4.5	0.500
5	0.530
5.5	0.560
6	0.600

TABLE 10 MINOR DIAMETER TOLERANCE, INTERNAL THREAD

Pitch, *P*	Tolerance Grade 5, TD_1	Tolerance Grade 6, TD_1
mm	mm	mm
0.35	...	0.100
0.4	...	0.112
0.45	...	0.125
0.5	...	0.140
0.6	...	0.160
0.7	...	0.180
0.75	0.150	0.190
0.8	0.160	0.200
1	0.190	0.236
1.25	0.212	0.265
1.5	0.236	0.300
1.75	0.265	0.335
2	0.300	0.375
2.5	0.355	0.450
3	0.400	0.500
3.5	0.450	0.560
4	0.475	0.600
4.5	0.530	0.670
5	0.560	0.710
5.5	0.600	0.750
6	0.630	0.800

Copyright ASME International
Provided by IHS under license with ASME
No reproduction or networking permitted without license from IHS
Not for Resale

TABLE 11 PITCH DIAMETER TOLERANCE, mm

Major Diameter *D* and *d*		Pitch	External Thread Tolerance Grade 4	Internal Thread Tolerance Grade 4	External Thread Tolerance Grade 6	Internal Thread Tolerance Grade 6
Over	To and Including	*P*	Td_2	TD_2	Td_2	TD_2
1.4	2.8	0.35	−0.040	+0.053	−0.063	+0.085
		0.4	−0.042	+0.056	−0.067	+0.090
		0.45	−0.045	+0.060	−0.071	+0.095
2.8	5.6	0.5	−0.048	+0.063	−0.075	+0.100
		0.6	−0.053	+0.071	−0.085	+0.112
		0.7	−0.056	+0.075	−0.090	+0.118
		0.75	−0.056	+0.075	−0.090	+0.118
		0.8	−0.060	+0.080	−0.095	+0.125
5.6	11.2	0.75	−0.063	+0.085	−0.100	+0.132
		1	−0.071	+0.095	−0.112	+0.150
		1.25	−0.075	+0.100	−0.118	+0.160
		1.5	−0.085	+0.112	−0.132	+0.180
11.2	22.4	1	−0.075	+0.100	−0.118	+0.160
		1.25	−0.085	+0.112	−0.132	+0.180
		1.5	−0.090	+0.118	−0.140	+0.190
		1.75	−0.095	+0.125	−0.150	+0.200
		2	−0.100	+0.132	−0.160	+0.212
		2.5	−0.106	+0.140	−0.170	+0.224
22.4	45	1	−0.080	+0.106	−0.125	+0.170
		1.5	−0.095	+0.125	−0.150	+0.200
		2	−0.106	+0.140	−0.170	+0.224
		3	−0.125	+0.170	−0.200	+0.265
		3.5	−0.132	+0.180	−0.212	+0.280
		4	−0.140	+0.190	−0.224	+0.300
		4.5	−0.150	+0.200	−0.236	+0.315
45	90	1.5	−0.100	+0.132	−0.160	+0.212
		2	−0.112	+0.150	−0.180	+0.236
		3	−0.132	+0.180	−0.212	+0.280
		4	−0.150	+0.200	−0.236	+0.315
		5	−0.160	+0.212	−0.250	+0.335
		5.5	−0.170	+0.224	−0.265	+0.355
		6	−0.180	+0.236	−0.280	+0.375
90	180	1.5	−0.105	+0.142	−0.167	+0.220
		2	−0.118	+0.160	−0.190	+0.250
		3	−0.140	+0.190	−0.224	+0.300
		4	−0.160	+0.212	−0.250	+0.335
		6	−0.190	+0.250	−0.300	+0.400
180	355	3	−0.160	+0.212	−0.250	+0.335
		4	−0.180	+0.236	−0.280	+0.375
		6	−0.200	+0.265	−0.315	+0.425

Copyright ASME International
Provided by IHS under license with ASME
No reproduction or networking permitted without license from IHS Not for Resale

TABLE 12 ALLOWABLE VARIATIONS IN LEAD AND EQUIVALENT CHANGE IN FUNCTIONAL DIAMETER, mm

	External Threads			Internal Threads		
Basic Thread Designation	Pitch Diameter Tolerance Grade	Allowable Variation in Lead (−/+)	Equivalent Change in Functional Diameter (+)	Pitch Diameter Tolerance Grade	Allowable Variation in Lead (−/+)	Equivalent Change in Functional Diameter (−)
MJ1.6 × 0.35	4	0.0116	0.0200	4	0.0153	0.0265
MJ1.8 × 0.35	4	0.0116	0.0200	4	0.0153	0.0265
MJ2 × 0.4	4	0.0121	0.0210	4	0.0162	0.0280
MJ2.2 × 0.45	4	0.0130	0.0225	4	0.0173	0.0300
MJ2.5 × 0.45	4	0.0130	0.0225	4	0.0173	0.0300
MJ3 × 0.5	4	0.0139	0.0240	4	0.0182	0.0315
MJ3.5 × 0.6	4	0.0153	0.0265	4	0.0205	0.0355
MJ4 × 0.7	4	0.0162	0.0280	4	0.0217	0.0375
MJ4.5 × 0.75	4	0.0162	0.0280	4	0.0217	0.0375
MJ5 × 0.8	4	0.0173	0.0300	4	0.0231	0.0400
MJ6 × 0.75	4	0.0182	0.0315	4	0.0245	0.0425
MJ6 × 1	4	0.0205	0.0355	4	0.0274	0.0475
MJ7 × 0.75	4	0.0182	0.0315	4	0.0245	0.0425
MJ7 × 1	4	0.0205	0.0355	4	0.0274	0.0475
MJ8 × 0.75	4	0.0182	0.0315	4	0.0245	0.0425
MJ8 × 1	4	0.0205	0.0355	4	0.0274	0.0475
MJ8 × 1.25	4	0.0217	0.0375	4	0.0289	0.0500
MJ9 × 0.75	4	0.0182	0.0315	4	0.0245	0.0425
MJ9 × 1	4	0.0205	0.0355	4	0.0274	0.0475
MJ9 × 1.25	4	0.0217	0.0375	4	0.0289	0.0500
MJ10 × 0.75	4	0.0182	0.0315	4	0.0245	0.0425
MJ10 × 1	4	0.0205	0.0355	4	0.0274	0.0475
MJ10 × 1.25	4	0.0217	0.0375	4	0.0289	0.0500
MJ10 × 1.5	4	0.0245	0.0425	4	0.0323	0.0560
MJ11 × 0.75	4	0.0182	0.0315	4	0.0245	0.0425
MJ11 × 1	4	0.0205	0.0355	4	0.0274	0.0475
MJ11 × 1.25	4	0.0217	0.0375	4	0.0289	0.0500
MJ11 × 1.5	4	0.0245	0.0425	4	0.0323	0.0560
MJ12 × 1	4	0.0217	0.0375	4	0.0289	0.0500
MJ12 × 1.25	4	0.0245	0.0425	4	0.0323	0.0560
MJ12 × 1.5	4	0.0260	0.0450	4	0.0341	0.0590
MJ12 × 1.75	4	0.0274	0.0475	4	0.0361	0.0625
MJ14 × 1	4	0.0217	0.0375	4	0.0289	0.0500
MJ14 × 1.25	4	0.0245	0.0425	4	0.0323	0.0560
MJ14 × 1.5	4	0.0260	0.0450	4	0.0341	0.0590
MJ14 × 2	4	0.0289	0.0500	4	0.0381	0.0660
MJ15 × 1	4	0.0217	0.0375	4	0.0289	0.0500
MJ15 × 1.5	4	0.0260	0.0450	4	0.0341	0.0590
MJ16 × 1	4	0.0217	0.0375	4	0.0289	0.0500
MJ16 × 1.5	4	0.0260	0.0450	4	0.0341	0.0590
MJ16 × 2	4	0.0289	0.0500	4	0.0381	0.0660

Copyright ASME International
Provided by IHS under license with ASME
No reproduction or networking permitted without license from IHS
Not for Resale

TABLE 12 ALLOWABLE VARIATIONS IN LEAD AND EQUIVALENT CHANGE IN FUNCTIONAL DIAMETER, mm (CONT'D)

	External Threads			Internal Threads		
Basic Thread Designation	Pitch Diameter Tolerance Grade	Allowable Variation in Lead (−/+)	Equivalent Change in Functional Diameter (+)	Pitch Diameter Tolerance Grade	Allowable Variation in Lead (−/+)	Equivalent Change in Functional Diameter (−)
MJ17 × 1	4	0.0217	0.0375	4	0.0289	0.0500
MJ17 × 1.5	4	0.0260	0.0450	4	0.0341	0.0590
MJ18 × 1	4	0.0217	0.0375	4	0.0289	0.0500
MJ18 × 1.5	4	0.0260	0.0450	4	0.0341	0.0590
MJ18 × 2	4	0.0289	0.0500	4	0.0381	0.0660
MJ18 × 2.5	4	0.0306	0.0530	4	0.0404	0.0700
MJ20 × 1	4	0.0217	0.0375	4	0.0289	0.0500
MJ20 × 1.5	4	0.0260	0.0450	4	0.0341	0.0590
MJ20 × 2	4	0.0289	0.0500	4	0.0381	0.0660
MJ20 × 2.5	4	0.0306	0.0530	4	0.0404	0.0700
MJ22 × 1	4	0.0217	0.0375	4	0.0289	0.0500
MJ22 × 1.5	4	0.0260	0.0450	4	0.0341	0.0590
MJ22 × 2	4	0.0289	0.0500	4	0.0381	0.0660
MJ22 × 2.5	4	0.0306	0.0530	4	0.0404	0.0700
MJ24 × 1	4	0.0231	0.0400	4	0.0306	0.0530
MJ24 × 1.5	4	0.0274	0.0475	4	0.0361	0.0625
MJ24 × 2	4	0.0306	0.0530	4	0.0404	0.0700
MJ24 × 3	4	0.0361	0.0625	4	0.0491	0.0850
MJ25 × 1	4	0.0231	0.0400	4	0.0306	0.0530
MJ25 × 1.5	4	0.0274	0.0475	4	0.0361	0.0625
MJ25 × 2	4	0.0306	0.0530	4	0.0404	0.0700
MJ26 × 1.5	4	0.0274	0.0475	4	0.0361	0.0625
MJ27 × 1	4	0.0231	0.0400	4	0.0306	0.0530
MJ27 × 1.5	4	0.0274	0.0475	4	0.0361	0.0625
MJ27 × 2	4	0.0306	0.0530	4	0.0404	0.0700
MJ27 × 3	4	0.0361	0.0625	4	0.0491	0.0850
MJ28 × 1	4	0.0231	0.0400	4	0.0306	0.0530
MJ28 × 1.5	4	0.0274	0.0475	4	0.0361	0.0625
MJ28 × 2	4	0.0306	0.0530	4	0.0404	0.0700
MJ30 × 1	4	0.0231	0.0400	4	0.0306	0.0530
MJ30 × 1.5	4	0.0274	0.0475	4	0.0361	0.0625
MJ30 × 2	4	0.0306	0.0530	4	0.0404	0.0700
MJ30 × 3	4	0.0361	0.0625	4	0.0491	0.0850
MJ30 × 3.5	4	0.0381	0.0660	4	0.0520	0.0900
MJ32 × 1.5	4	0.0274	0.0475	4	0.0361	0.0625
MJ32 × 2	4	0.0306	0.0530	4	0.0404	0.0700
MJ33 × 1.5	4	0.0274	0.0475	4	0.0361	0.0625
MJ33 × 2	4	0.0306	0.0530	4	0.0404	0.0700
MJ33 × 3	4	0.0361	0.0625	4	0.0491	0.0850
MJ35 × 1.5	4	0.0274	0.0475	4	0.0361	0.0625
MJ36 × 1.5	4	0.0274	0.0475	4	0.0361	0.0625

Copyright ASME International
Provided by IHS under license with ASME
No reproduction or networking permitted without license from IHS Not for Resale

TABLE 12 ALLOWABLE VARIATIONS IN LEAD AND EQUIVALENT CHANGE IN FUNCTIONAL DIAMETER, mm (CONT'D)

	External Threads			Internal Threads		
Basic Thread Designation	Pitch Diameter Tolerance Grade	Allowable Variation in Lead (−/+)	Equivalent Change in Functional Diameter (+)	Pitch Diameter Tolerance Grade	Allowable Variation in Lead (−/+)	Equivalent Change in Functional Diameter (−)
MJ36 × 2	4	0.0306	0.0530	4	0.0404	0.0700
MJ36 × 3	4	0.0361	0.0625	4	0.0491	0.0850
MJ36 × 4	4	0.0404	0.0700	4	0.0549	0.0950
MJ38 × 1.5	4	0.0274	0.0475	4	0.0361	0.0625
MJ39 × 1.5	4	0.0274	0.0475	4	0.0361	0.0625
MJ39 × 2	4	0.0306	0.0530	4	0.0404	0.0700
MJ39 × 3	4	0.0361	0.0625	4	0.0491	0.0850
MJ40 × 1.5	4	0.0274	0.0475	4	0.0361	0.0625
MJ40 × 2	4	0.0306	0.0530	4	0.0404	0.0700
MJ40 × 3	4	0.0361	0.0625	4	0.0491	0.0850
MJ42 × 1.5	4	0.0274	0.0475	4	0.0361	0.0625
MJ42 × 2	4	0.0306	0.0530	4	0.0404	0.0700
MJ42 × 3	4	0.0361	0.0625	4	0.0491	0.0850
MJ42 × 4.5	4	0.0433	0.0750	4	0.0577	0.1000
MJ45 × 1.5	4	0.0274	0.0475	4	0.0361	0.0625
MJ45 × 2	4	0.0306	0.0530	4	0.0404	0.0700
MJ45 × 3	4	0.0361	0.0625	4	0.0491	0.0850
MJ48 × 1.5	4	0.0289	0.0500	4	0.0381	0.0660
MJ48 × 2	4	0.0323	0.0560	4	0.0433	0.0750
MJ48 × 3	4	0.0381	0.0660	4	0.0520	0.0900
MJ48 × 5	4	0.0462	0.0800	4	0.0612	0.1060
MJ50 × 1.5	4	0.0289	0.0500	4	0.0381	0.0660
MJ50 × 2	4	0.0323	0.0560	4	0.0433	0.0750
MJ50 × 3	4	0.0381	0.0660	4	0.0520	0.0900
MJ52 × 1.5	4	0.0289	0.0500	4	0.0381	0.0660
MJ52 × 2	4	0.0323	0.0560	4	0.0433	0.0750
MJ52 × 3	4	0.0381	0.0660	4	0.0520	0.0900
MJ55 × 1.5	4	0.0289	0.0500	4	0.0381	0.0660
MJ55 × 2	4	0.0323	0.0560	4	0.0433	0.0750
MJ55 × 3	4	0.0381	0.0660	4	0.0520	0.0900
MJ56 × 1.5	4	0.0289	0.0500	4	0.0381	0.0660
MJ56 × 2	4	0.0323	0.0560	4	0.0433	0.0750
MJ56 × 3	4	0.0381	0.0660	4	0.0520	0.0900
MJ56 × 5.5	4	0.0491	0.0850	4	0.0647	0.1120
MJ58 × 1.5	4	0.0289	0.0500	4	0.0381	0.0660
MJ58 × 2	4	0.0323	0.0560	4	0.0433	0.0750
MJ58 × 3	4	0.0381	0.0660	4	0.0520	0.0900
MJ60 × 1.5	4	0.0289	0.0500	4	0.0381	0.0660
MJ60 × 2	4	0.0323	0.0560	4	0.0433	0.0750
MJ60 × 3	4	0.0381	0.0660	4	0.0520	0.0900
MJ62 × 1.5	4	0.0289	0.0500	4	0.0381	0.0660

Copyright ASME International
Provided by IHS under license with ASME
No reproduction or networking permitted without license from IHS
Not for Resale

STD.ASME B1.21M-ENGL 1997 ■ 0759670 0589942 62T ■

TABLE 12 ALLOWABLE VARIATIONS IN LEAD AND EQUIVALENT CHANGE IN FUNCTIONAL DIAMETER, mm (CONT'D)

	External Threads			Internal Threads		
Basic Thread Designation	Pitch Diameter Tolerance Grade	Allowable Variation in Lead (−/+)	Equivalent Change in Functional Diameter (+)	Pitch Diameter Tolerance Grade	Allowable Variation in Lead (−/+)	Equivalent Change in Functional Diameter (−)
MJ62 × 2	4	0.0323	0.0560	4	0.0433	0.0750
MJ62 × 3	4	0.0381	0.0660	4	0.0520	0.0900
MJ64 × 1.5	4	0.0289	0.0500	4	0.0381	0.0660
MJ64 × 2	4	0.0323	0.0560	4	0.0433	0.0750
MJ64 × 3	4	0.0381	0.0660	4	0.0520	0.0900
MJ64 × 6	4	0.0520	0.0900	4	0.0681	0.1180
MJ65 × 1.5	4	0.0289	0.0500	4	0.0381	0.0660
MJ65 × 2	4	0.0323	0.0560	4	0.0433	0.0750
MJ65 × 3	4	0.0381	0.0660	4	0.0520	0.0900
MJ68 × 1.5	4	0.0289	0.0500	4	0.0381	0.0660
MJ68 × 2	4	0.0323	0.0560	4	0.0433	0.0750
MJ68 × 3	4	0.0381	0.0660	4	0.0520	0.0900
MJ70 × 1.5	4	0.0289	0.0500	4	0.0381	0.0660
MJ70 × 2	4	0.0323	0.0560	4	0.0433	0.0750
MJ70 × 3	4	0.0381	0.0660	4	0.0520	0.0900
MJ72 × 1.5	4	0.0289	0.0500	4	0.0381	0.0660
MJ72 × 2	4	0.0323	0.0560	4	0.0433	0.0750
MJ72 × 3	4	0.0381	0.0660	4	0.0520	0.0900
MJ72 × 6	4	0.0520	0.0900	4	0.0681	0.1180
MJ75 × 1.5	4	0.0289	0.0500	4	0.0381	0.0660
MJ75 × 2	4	0.0323	0.0560	4	0.0433	0.0750
MJ75 × 3	4	0.0381	0.0660	4	0.0520	0.0900
MJ76 × 1.5	4	0.0289	0.0500	4	0.0381	0.0660
MJ76 × 2	4	0.0323	0.0560	4	0.0433	0.0750
MJ76 × 3	4	0.0381	0.0660	4	0.0520	0.0900
MJ78 × 1.5	4	0.0289	0.0500	4	0.0381	0.0660
MJ78 × 2	4	0.0323	0.0560	4	0.0433	0.0750
MJ78 × 3	4	0.0381	0.0660	4	0.0520	0.0900
MJ80 × 1.5	4	0.0289	0.0500	4	0.0381	0.0660
MJ80 × 2	4	0.0323	0.0560	4	0.0433	0.0750
MJ80 × 3	4	0.0381	0.0660	4	0.0520	0.0900
MJ80 × 6	4	0.0520	0.0900	4	0.0681	0.1180
MJ82 × 1.5	4	0.0289	0.0500	4	0.0381	0.0660
MJ82 × 2	4	0.0323	0.0560	4	0.0433	0.0750
MJ82 × 3	4	0.0381	0.0660	4	0.0520	0.0900
MJ85 × 1.5	4	0.0289	0.0500	4	0.0381	0.0660
MJ85 × 2	4	0.0323	0.0560	4	0.0433	0.0750
MJ85 × 3	4	0.0381	0.0660	4	0.0520	0.0900
MJ90 × 1.5	4	0.0289	0.0500	4	0.0381	0.0660
MJ90 × 2	4	0.0323	0.0560	4	0.0433	0.0750
MJ90 × 3	4	0.0381	0.0660	4	0.0520	0.0900

Copyright ASME International
Provided by IHS under license with ASME
No reproduction or networking permitted without license from IHS
Not for Resale

TABLE 12 ALLOWABLE VARIATIONS IN LEAD AND EQUIVALENT CHANGE IN FUNCTIONAL DIAMETER, mm (CONT'D)

	External Threads			Internal Threads		
Basic Thread Designation	Pitch Diameter Tolerance Grade	Allowable Variation in Lead (−/+)	Equivalent Change in Functional Diameter (+)	Pitch Diameter Tolerance Grade	Allowable Variation in Lead (−/+)	Equivalent Change in Functional Diameter (−)
MJ90× 6	4	0.0520	0.0900	4	0.0681	0.1180
MJ95 × 1.5	4	0.0303	0.0525	4	0.0410	0.0710
MJ95 × 2	4	0.0341	0.0590	4	0.0462	0.0800
MJ95 × 3	4	0.0404	0.0700	4	0.0549	0.0950
MJ100 × 1.5	4	0.0303	0.0525	4	0.0410	0.0710
MJ100 × 2	4	0.0341	0.0590	4	0.0462	0.0800
MJ100 × 3	4	0.0404	0.0700	4	0.0549	0.0950
MJ100 × 6	4	0.0549	0.0950	4	0.0722	0.1250
MJ105 × 1.5	4	0.0303	0.0525	4	0.0410	0.0710
MJ105 × 2	4	0.0341	0.0590	4	0.0462	0.0800
MJ105 × 3	4	0.0404	0.0700	4	0.0549	0.0950
MJ110 × 1.5	4	0.0303	0.0525	4	0.0410	0.0710
MJ110 × 2	4	0.0341	0.0590	4	0.0462	0.0800
MJ110 × 3	4	0.0404	0.0700	4	0.0549	0.0950
MJ115 × 1.5	4	0.0303	0.0525	4	0.0410	0.0710
MJ115 × 2	4	0.0341	0.0590	4	0.0462	0.0800
MJ115 × 3	4	0.0404	0.0700	4	0.0549	0.0950
MJ120 × 1.5	4	0.0303	0.0525	4	0.0410	0.0710
MJ120 × 2	4	0.0341	0.0590	4	0.0462	0.0800
MJ120 × 3	4	0.0404	0.0700	4	0.0549	0.0950
MJ125 × 1.5	4	0.0303	0.0525	4	0.0410	0.0710
MJ125 × 2	4	0.0341	0.0590	4	0.0462	0.0800
MJ125 × 3	4	0.0404	0.0700	4	0.0549	0.0950
MJ130 × 1.5	4	0.0303	0.0525	4	0.0410	0.0710
MJ130 × 2	4	0.0341	0.0590	4	0.0462	0.0800
MJ130 × 3	4	0.0404	0.0700	4	0.0549	0.0950
MJ135 × 1.5	4	0.0303	0.0525	4	0.0410	0.0710
MJ135 × 2	4	0.0341	0.0590	4	0.0462	0.0800
MJ135 × 3	4	0.0404	0.0700	4	0.0549	0.0950
MJ140 × 1.5	4	0.0303	0.0525	4	0.0410	0.0710
MJ140 × 2	4	0.0341	0.0590	4	0.0462	0.0800
MJ140 × 3	4	0.0404	0.0700	4	0.0549	0.0950
MJ145 × 1.5	4	0.0303	0.0525	4	0.0410	0.0710
MJ145 × 2	4	0.0341	0.0590	4	0.0462	0.0800
MJ145 × 3	4	0.0404	0.0700	4	0.0549	0.0950
MJ150 × 1.5	4	0.0303	0.0525	4	0.0410	0.0710
MJ150 × 2	4	0.0341	0.0590	4	0.0462	0.0800
MJ150 × 3	4	0.0404	0.0700	4	0.0549	0.0950
MJ155 × 3	4	0.0404	0.0700	4	0.0549	0.0950
MJ160 × 3	4	0.0404	0.0700	4	0.0549	0.0950
MJ165 × 3	4	0.0404	0.0700	4	0.0549	0.0950

Copyright ASME International
Provided by IHS under license with ASME
No reproduction or networking permitted without license from IHS
Not for Resale

TABLE 12 ALLOWABLE VARIATIONS IN LEAD AND EQUIVALENT CHANGE IN FUNCTIONAL DIAMETER, mm (CONT'D)

	External Threads			Internal Threads		
Basic Thread Designation	Pitch Diameter Tolerance Grade	Allowable Variation in Lead (−/+)	Equivalent Change in Functional Diameter (+)	Pitch Diameter Tolerance Grade	Allowable Variation in Lead (−/+)	Equivalent Change in Functional Diameter (−)
MJ170 × 3	4	0.0404	0.0700	4	0.0549	0.0950
MJ175 × 3	4	0.0404	0.0700	4	0.0549	0.0950
MJ180 × 3	4	0.0404	0.0700	4	0.0549	0.0950
MJ185 × 3	4	0.0462	0.0800	4	0.0612	0.1060
MJ190 × 3	4	0.0462	0.0800	4	0.0612	0.1060
MJ195 × 3	4	0.0462	0.0800	4	0.0612	0.1060
MJ200 × 3	4	0.0462	0.0800	4	0.0612	0.1060

GENERAL NOTE:
Allowable variation in lead for pitch diameter Tolerance Grade 6 may be calculated by multiplying one-half the applicable pitch diameter tolerance (from Table 6) by 0.57735 and rounding the resulting value to 4 decimal places. Equivalent change in functional diameter is equal to one-half the applicable pitch diameter tolerance.

Copyright ASME International
Provided by IHS under license with ASME
No reproduction or networking permitted without license from IHS
Not for Resale

TABLE 13 ALLOWABLE VARIATIONS IN 30 deg BASIC HALF-ANGLE OF SCREW THREADS

External and Internal Threads		
	Allowable Variation in Half-Angle of Thread	
Pitch	± Deg	Min.
0.35	2	00
0.4	1	50
0.45	1	45
0.5	1	40
0.6	1	35
0.7	1	30
0.75	1	30
0.8	1	30
1	1	20
1.25	1	10
1.5	1	00
1.75	0	55
2	0	55
2.5	0	50
3	0	45
3.5	0	45
4	0	40
4.5	0	40
5	0	40
5.5	0	40
6	0	40

GENERAL NOTE: The allowable flank half-angle variation in min of arc for pitch diameter Tolerance Grade 6 is equal to 125 divided by the square root of pitch. Round calculated angle variation to the nearest 5 min so that the last digit is either a zero or a 5.

Copyright ASME International
Provided by IHS under license with ASME
No reproduction or networking permitted without license from IHS
Not for Resale

APPENDIX A
COATING OF THREADS

(This Appendix is not part of ASME B1.21M-1997 and is included for information only.)

A1 GENERAL

Coating is one or more applications of additive finish of any material including dry film lubricants, but not including soft or liquid lubricant. On a cylindrical surface, the effect of coating is to change the diameter by twice the coating thickness — one coating thickness on each side of the cylinder. Because the coating thickness is measured perpendicular to the coated surface, while the pitch diameter is measured perpendicular to the thread axis, the effect of a uniformly coated thread flank on the pitch diameter is a change four times the thickness of coating on the flank.

The diameters of external threads before coating will be smaller while the diameters of internal threads before coating will be larger than the coated diameters.

A1.1 External Thread, Maximum and Minimum Coating Thickness Specified

Before determining coating gaging limits for a uniformly coated thread, decrease:

(a) maximum pitch diameter by four times maximum coating thickness,

(b) minimum pitch diameter by four times minimum coating thickness,

(c) maximum major diameter by two times maximum coating thickness, and

(d) minimum major diameter by two times minimum coating thickness.

A1.2 External Thread, Only Nominal or Minimum Coating Thickness Specified

If no coating thickness tolerance is given, it is recommended that a tolerance of plus 50% of the nominal or minimum thickness be assumed. Then, before determining coating gaging limits for a uniformly coated thread, decrease:

(a) maximum pitch diameter by six times coating thickness,

(b) minimum pitch diameter by four times coating thickness,

(c) maximum major diameter by three times coating thickness, and

(d) minimum major diameter by two times coating thickness.

A1.3 Internal Threads

Standard internal threads provide no allowance for coating thickness. Before determining coating gaging limits for a uniformly coated thread, increase:

(a) minimum pitch diameter by four times maximum coating thickness, if specified, or by six times minimum or nominal coating thickness when a tolerance is not specified,

(b) maximum pitch diameter by four times minimum or nominal coating thickness,

(c) minimum minor diameter by two times maximum coating thickness, if specified, or by three times minimum or nominal coating thickness, and

(d) maximum minor diameter by two times minimum or nominal coating thickness.

A1.4 Other Considerations

It is essential to adequately review all possibilities and consider limitations in the threading and coating production processes before finalizing the coating process and the allowance required to accommodate the coating. A no-allowance thread after coating shall not transgress the basic profile and is, therefore, subject to acceptance using a basic (Tolerance Position H/h) size GO thread gage.

Copyright ASME International
Provided by IHS under license with ASME
No reproduction or networking permitted without license from IHS
Not for Resale

APPENDIX B
SYMBOLS FOR MJ THREAD DIMENSIONS AND TOLERANCES

(This Appendix is not part of ASME B1.21M-1997 and is included for information only.)

Symbol	Dimension	Symbol	Dimension
H	Height, sharp vee thread	LE	Length of thread engagement
P	Pitch	LE bsc	basic length, thread engagement
α	Flank half-angle	LE max.	maximum length, thread engagement
MJ	Thread form symbol	LE min.	minimum length, thread engagement
	Internal Threads		**External Threads**
D	Major diameter	d	Major diameter
D bsc	basic major diameter	d bsc	basic major diameter
D min.	minimum major diamter	d max.	maximum major diamter
		d min.	minimum major diameter
D_1	Minor diameter	d_1	Minor diameter
D_1 bsc	basic minor diameter	d_1 bsc	basic minor diameter
D_1 max.	maximum minor diameter	d_1 max.	maximum minor diameter
D_1 min.	minimum minor diameter		
D_2	Pitch diameter	d_2	Pitch diameter
D_2 bsc	basic pitch diameter	d_2 bsc	basic pitch diameter
D_2 max.	maximum pitch diameter	d_2 max.	maximum pitch diameter
D_2 min.	minimum pitch diameter	d_2 min.	minimum pitch diameter
D_3	Root diameter	d_3	Root diameter
D_3 max.	maximum root diameter	d_3 max.	maximum root diameter
		d_3 min.	minimum root diameter
		R	Root radius
		R max.	maximum root radius
		R min.	minimum root radius
T	Tolerance	T	Tolerance
TD_1	minor diameter tolerance	Td	major diameter tolerance
TD_2	pitch diameter tolerance	Td_2	pitch diameter tolerance
		Td_3	root diameter tolerance

Copyright ASME International
Provided by IHS under license with ASME
No reproduction or networking permitted without license from IHS
Not for Resale

AMERICAN NATIONAL STANDARDS FOR SCREW THREADS

Unified Inch Screw Threads (UN and UNR Thread Form) B1.1-1989
Gages and Gaging for Unified Inch Screw Threads ..... B1.2-1983(R1991)
Screw Thread Gaging Systems for Dimensional Acceptability — Inch and Metric Screw Threads (UN, UNR, UNJ, M, and MJ) B1.3M-1992
Acme Screw Threads ..... B1.5-1988(R1994)
Nomenclature, Definitions, and Letter Symbols for Screw Threads ..... B1.7M-1984(R1992)
Stub Acme Screw Threads ..... B1.8-1988(R1994)
Buttress Inch Screw Threads 7°/45° Form With 0.6 Pitch Basic Height of Thread Engagement ..... B1.9-1973(R1992)
Unified Miniature Screw Threads B1.10M-1997
Microscope Objective Thread ..... B1.11-1958(R1994)
Class 5 Interference-Fit Thread ..... B1.12-1987(R1992)
Metric Screw Threads — M Profile B1.13M-1995
Unified Inch Screw Threads (UNJ Thread Form) B1.15-1995
Gages and Gaging for Metric M Screw Threads ..... B1.16M-1984(R1992)
Metric Screw Threads for Commercial Mechanical Fasteners — Boundary Profile Defined ..... B1.18M-1982(R1987)
Gages for Metric Screw Threads for Commercial Mechanical Fasteners — Boundary Profile Defined ..... B1.19M-1984(R1992)
Pipe Threads, General Purpose (Inch) ..... B1.20.1-1983(R1992)
Dryseal Pipe Threads (Inch) ..... B1.20.3-1976(R1991)
Dryseal Pipe Threads (Metric Translation of B1.20.3-1976) ..... B1.20.4-1976(R1982)
Gaging for Dryseal Pipe Threads (Inch) B1.20.5-1991
Gaging for Dryseal Pipe Threads (Metric Translation of B1.20.5-1978) B1.20.6M-1984
Hose Coupling Screw Threads (Inch) B1.20.7-1991
Metric Screw Threads: MJ Profile B1.21M-1997
Gages and Gaging for MJ Series Metric Screw Threads ..... B1.22M-1985(R1992)
Screw Threads — Standard Practice for Calculating and Rounding Dimensions B1.30M-1992

The ASME Publications Catalog shows a complete list of all the Standards published by the Society. For a complimentary catalog, or the latest information about our publications, call 1-800-THE-ASME (1-800-843-2763).

Copyright ASME International
Provided by IHS under license with ASME
No reproduction or networking permitted without license from IHS
Not for Resale