NOTICE OF ADOPTION

ADOPTION NOTICE 1
21 June 1993 for
ASME B1.20.7-1991
19 September 1991

ASME B1.20.7-1991 was adopted on 21 June 1993, and is approved for use by the Federal agencies. The American Society of Mechanical Engineers (ASME) prepared this document which was approved by the American National Standards Institute (ANSI) as an American National Standard. Both ASME and ANSI have furnished clearances required by existing regulations. Copies of this document are stocked by the Standardization Documents Order Desk, Building 4D, 700 Robbins Avenue, Philadelphia, PA 19111-5094, for issue to DoD activities only. All other requestors must obtain documents from:

The American Society of Mechanical Engineers
United Engineering Center
345 East 47th Street
New York, NY 10017-2392

or

The American National Standards Institute
11 West 42nd Street
New York, NY 10036-8002

Title of Document: Hose Coupling Screw Threads (Inch)

Date of Specific Issue Adopted: 19 September 1991

Releasing Non-Government Standards Body: The American Society of Mechanical Engineers

NOTE: Use of this standard is subject to all requirements and limitations of FED-STD-H28/10, Screw-Thread Standards for Federal Services Section 10, Hose Coupling and Fire Hose Coupling Screw Threads.

Custodians:
Army - AR
Navy - AS
Air Force - 99

Review Activities:
Army - AT
Navy - SH
Air Force - 82, 84
DLA - CS

User Activity:
Navy - YD

Civil Agency Coordination Activities:
Commerce - NIST
GSA - 7FXE

Military Coordinating Activity:
DLA - IS

(Project THDS-0091)

AMSC N/A

AREA THDS

DISTRIBUTION STATEMENT A. Approved for public release; distribution is unlimited.

Copyright ASME International
Provided by IHS under license with ASME
No reproduction or networking permitted without license from IHS
Not for Resale

ASME B1.20.7 91 ■ 0759670 0529982 807 ■

ASME B1.20.7-1991

(REVISION OF ANSI/ASME B1.20.7-1966)

HOSE COUPLING SCREW THREADS (INCH)

AN AMERICAN NATIONAL STANDARD

The American Society of Mechanical Engineers

Copyright ASME International
Provided by IHS under license with ASME
No reproduction or networking permitted without license from IHS
Not for Resale

AN AMERICAN NATIONAL STANDARD

Hose Coupling Screw Threads (Inch)

ASME B1.20.7-1991

(REVISION OF ANSI/ASME B1.20.7-1966)

The American Society of Mechanical Engineers

345 East 47th Street, New York, N.Y. 10017

Copyright ASME International
Provided by IHS under license with ASME
No reproduction or networking permitted without license from IHS

Not for Resale

Date of Issuance: April 16, 1992

This Standard will be revised when the Society approves the issuance of a new edition. There will be no addenda or written interpretations of the requirements of this Standard issued to this edition.

ASME is the registered trademark of The American Society of Mechanical Engineers

This code or standard was developed under procedures accredited as meeting the criteria for American National Standards. The Consensus Committee that approved the code or standard was balanced to assure that individuals from competent and concerned interests have had an opportunity to participate. The proposed code or standard was made available for public review and comment which provides an opportunity for additional public input from industry, academia, regulatory agencies, and the public-at-large.

ASME does not "approve," "rate," or "endorse" any item, construction, proprietary device, or activity.

ASME does not take any position with respect to the validity of any patent rights asserted in connection with any items mentioned in this document, and does not undertake to insure anyone utilizing a standard against liability for infringement of any applicable Letters Patent, nor assume any such liability. Users of a code or standard are expressly advised that determination of the validity of any such patent rights, and the risk of infringement of such rights, is entirely their own responsibility.

Participation by federal agency representative(s) or person(s) affiliated with industry is not to be interpreted as government or industry endorsement of this code or standard.

ASME accepts responsibility for only those interpretations issued in accordance with governing ASME procedures and policies which preclude the issuance of interpretations by individual volunteers.

No part of this document may be reproduced in any form,
in an electronic retrieval system or otherwise,
without the prior written permission of the publisher.

Copyright © 1992 by
THE AMERICAN SOCIETY OF MECHANICAL ENGINEERS
All Rights Reserved
Printed in U.S.A.

Copyright ASME International
Provided by IHS under license with ASME
No reproduction or networking permitted without license from IHS

Not for Resale

FOREWORD

(This Foreword is not part of ASME B1.20.7-1991.)

Local standards for small hose coupling threads in use prior to 1920 were summarized in a table in the Proceedings of the National Fire Protection Association, Vol. 24, 1920, p. 180. Of these, the Standard Iron Pipe Thread had been most widely used, and it had been reliably reported that this thread had been in use for small hose couplings since 1894 or earlier. In the case of the three-fourths-inch size, however, 11 and 11½ threads per inch, with a diameter of 1 1/16 in. were already in very extensive use for garden hose. It was reported that the first garden hose spray nozzle had been made prior to 1890 in the shops of the W. D. Allen Mfg. Co., Chicago.

In 1918 the Fire Dept. Supply and Linen Hose Section of the War Industries Board recommended that for the duration of the war "hydrants, hose valves, hose couplings, nipples, and nozzles 1¼ in. to 2 in., inclusive, to be iron pipe thread for new work, hose gauge or special threads only to be used for replacement or extension of existing plant equipment. The adoption of such a standard will result in the elimination of the various so-called hose threads which are used locally in the different sections of the country. Such a standard will also permit repairs or connections being made in the field by the use of wrought iron pipe connections or fittings. It will also result in considerable saving in correspondence and detail now necessary in endeavoring to ascertain what particular 'hose' standard thread is desired."

A blueprint of the nominal sizes and pitches of hose thread dimensions, dated March 5, 1918, of the National Association of Brass Manufacturers was furnished the National Screw Thread Commission in November, 1918. Limits of size for iron pipe thread sizes and pitches were designed as National hose coupling thread dimensions and adopted by the National Association of Brass Manufacturers March 18, 1920. These were in agreement with those in the Progress Report of the N.S.T.C., approved June 19, 1920, and published January 4, 1921 as NBS Miscellaneous Publication No. 42. A survey in 1925 of some of the members of the National Association of Brass Manufacturers showed these standards to be satisfactory. These threads from ½ to 2 in. diameter are now designated "NPSH."

In January 1927, The American Society of Mechanical Engineers requested the American Engineering Standards Committee (later changed to the American Standards Association) to authorize the organization of a Sectional Committee to complete the standardization of firehose couplings and to attempt to unify and complete the existing dimensions of small hose couplings. This authority was given and the Sectional Committee B33 was organized in October, 1928, under the sponsorship of The American Society of Mechanical Engineers, to prepare specifications for screw threads for small hose couplings ranging from ½ to 2 in. nominal size. A draft dated July 1935 was approved by the American Standards Association and issued as ASA B33.1-1935.

At its meeting of April 13, 1961, the ASA Mechanical Standards Board assigned responsibility for future revisions of the American Standards

B26-1925, Fire-Hose Couplings Screw Thread, and
B33.1-1935, Hose Coupling Screw Threads

to Sectional Committee B2. As a result, the name of the Committee was changed to Sectional Committee B2 on the Standardization of Pipe and Hose Coupling Threads.

Copyright ASME International
Provided by IHS under license with ASME
No reproduction or networking permitted without license from IHS
Not for Resale

Subcommittee 6 on Hose Coupling Threads was organized and held its first meeting on October 24, 1962 to undertake the revision of ASA B33.1-1935.

Subcommittee 7 on Fire Hose Coupling Threads was organized and held its first meeting on October 25, 1962 to undertake the revision of ASA B26-1925. It was arranged that Subcommittee 7 would include in its scope those thread sizes in ASA B33.1-1935 which are used primarily for fire protection purposes.

The proposed revision of B33.1, designated B2.4, was submitted to the sponsor organizations and the United States of America Standards Institute, and formally designated a USA Standard on December 30, 1966.

In 1973 the American National Standards Committee B2 was absorbed by ANSI Standard Committee B1 and reorganized as Subcommittee 20. B2.4 was reaffirmed without revision by Standard Committee B1 and redesignated as ANSI/ASME Standard B1.20.7 on August 5, 1983.

This revision was approved by the American National Standards Institute on September 19, 1991.

Copyright ASME International
Provided by IHS under license with ASME
No reproduction or networking permitted without license from IHS
Not for Resale

ASME STANDARDS COMMITTEE B1
Standardization and Unification of Screw Threads

(The following is the roster of the Committee at the time of approval of this Standard.)

OFFICERS

E. Schwartz, *Chairman*
K. E. McCullough, *Vice Chairman*
R. McGinnis, *Secretary*

COMMITTEE PERSONNEL

A. R. Breed
R. J. Browning
R. M. Byrne
D. P. Cadieux
F. H. Cantrell
R. S. Chamerda
R. Dodge
P. J. Drake
A. E. Ellis
H. W. Ellison
C. G. Erickson
W. C. Farrell, Jr.
G. A. Flannery
D. S. George
J. O. Heinze
C. W. Jatho
S. P. Johnson
S. I. Kanter
R. W. Lamport
R. S. LaNier
J. B. Levy
K. E. McCullough
J. L. McMurray
W. R. Newman
A. Painter
G. A. Russ
R. J. Sabatos
D. M. Satava
M. M. Schuster
E. Schwartz
R. Searr
R. Seppey
A. D. Shepherd, Jr.
V. B. Shook
A. G. Strang
J. F. Sullivan
R. L. Tennis
A. F. Thibodeau
J. Trilling
C. J. Wilson

SUBCOMMITTEE B1.20 — PIPE THREADS

D. P. Cadieux, *Chairman*
A. F. Thibodeau, *Secretary*
C. F. Banks
D. Berg
M. J. Bibeau
P. F. Braun
R. J. Browning
F. G. Calderone
J. A. Casner
W. O. Clinedinst
F. Dallas, Jr.
L. N. Dixon, Jr.
R. Dodge
W. C. Farrell, Jr.
L. S. Feldheim
G. A. Flannery
S. Jiles
S. I. Kanter
R. P. Knittel
M. W. Rose
G. A. Russ
D. M. Satava
A. D. Shepherd, Jr.
A. G. Strang
A. M. Wilkerson

Copyright ASME International
Provided by IHS under license with ASME
No reproduction or networking permitted without license from IHS
Not for Resale

CONTENTS

Foreword iii
Standards Committee Roster v

1 Scope 1
1.1 Purpose 1
1.2 Federal Government Use 1
1.3 Reference Documents 1

2 Thread Designations 1

3 Tolerances 1
3.1 For Nipple (External) Threads 2
3.2 For Coupling Swivel (Internal) Threads 2

4 Acceptability 2

Figure
1 Thread Form for American National Standard Hose Coupling Threads, NPSH, NH, and NHR 3

Tables
1 Design Dimensions of American National Standard Hose Coupling Threads, NPSH, NH, and NHR 4
2 Product External Thread Limits of Size and Tolerances for American National Standard Hose Coupling Threads, NPSH, NH, and NHR Nipples 5
3 Product Internal Thread Limits of Size and Tolerances for American National Standard Hose Coupling Threads, NPSH, NH, and NHR Coupling Swivels 6
4 Lengths of Threads for American National Standard Hose Coupling Threads, NPSH, NH, and NHR 7
5 Variations in Lead and Half-Angle Consuming One-Half of Pitch Diameter Tolerances for American National Standard Hose Coupling Threads, NPSH, NH, and NHR 8
6 Gage Limits of Size of Ring Gages for External (Nipple) Threads for American National Standard Hose Coupling Threads, NPSH, NH, and NHR 9
7 Gage Limits of Size of Plug Gages for Internal (Coupling Swivel) Threads for American National Standard Hose Coupling Threads NPSH, NH, and NHR 10
8 Setting Plug Gage Limits of Size for Ring Gages for American National Standard Hose Coupling Threads, NPSH, NH, and NHR 11

Copyright ASME International
Provided by IHS under license with ASME
No reproduction or networking permitted without license from IHS
Not for Resale

Appendix

A American National Fire-Hose Coupling Threads 13
A1 Scope 13

Tables

A1 Basic Dimensions of American National Fire-Hose Coupling Threads, NH 13
A2 Thread Limits of Size and Tolerance for NH Internal Thread (Couplings) 14
A3 Limits of Size and Tolerances of NH External Threads (Nipples) 14

Copyright ASME International
Provided by IHS under license with ASME
No reproduction or networking permitted without license from IHS
Not for Resale

HOSE COUPLING SCREW THREADS

1 SCOPE

1.1 Purpose

The purpose of this document is to provide standards for application to the threaded parts of hose couplings, valves, nozzles, and all other fittings used in direct connection with hose intended for domestic, industrial, and general service in nominal sizes of ½, ⅝, ¾, 1, 1¼, 1½, 2, 2½, 3, 3½, and 4 in.

The normal sequence of connections, in relation to the direction of flow, is from an externally threaded nipple into an internally threaded coupling.

The basic dimensions are given in Table 1 while complete detailed dimensions and thread form are given in Tables 2 and 3.

1.2 Federal Government Use

When this Standard is approved by the Department of Defense and Federal Agencies and is incorporated into FED-STD-H28/10, Screw Thread Standards for Federal Services Section 10, the use of this Standard by the Federal Government is subject to all the requirements and limitations of FED-STD-H28/10.

1.3 Reference Documents

The latest issues of the following documents form a part of this Standard to the extent specified herein:

ANSI/ASME B1.7M	Nomenclature, Definitions, and Letter Symbols for Screw Threads
ANSI/ASME B1.3M	Screw Thread Gaging Systems for Dimensional Acceptability
ANSI/ASME B1.2	Gages and Gaging for Unified Inch Screw Threads
ASME/ANSI B47.1	Gage Blanks

2 THREAD DESIGNATIONS

Threads are designated NH, NHR, and NPSH. The significance of each designation is as follows:

NH	Standard hose coupling threads of full form and fire hose.
NHR	Standard hose coupling threads for garden hose application where the design utilizes thin walled material which is formed to the desired thread.
NPSH	Hose coupling joints ordinarily made with straight internal and external loose-fitting threads. By the use of this thread series, it is possible to join small hose couplings in sizes ½ to 4; inclusive, to ends of standard pipe having NPT threads using a gasket to seal the joint.

3 TOLERANCES

Figure 1 shows the relationship between external (nipple) and internal (coupling swivel) dimensions.

The pitch diameter tolerances for a mating nipple and coupling swivel are the same. Pitch diameter tolerances include lead and angle variations. Values for variations in lead and half-angles consuming one-half of the pitch diameter tolerance are shown in Table 5.

The tolerance relationships are as follows.

Copyright ASME International
Provided by IHS under license with ASME
No reproduction or networking permitted without license from IHS
Not for Resale

3.1 For Nipple (External) Threads (except NHR)

(*a*) Major Diameter Tolerances = 2 × Pitch Diameter Tolerance

(*b*) Minor Diameter Tolerance = Pitch Diameter Tolerance + 2*h*/9 (*h* = Basic Thread Height. See Fig. 1).

The minimum minor diameter of the nipple is such as to result in a flat equal to ⅓ of the *P*/8 basic flat or *P*/24 at the root, when the pitch diameter of the nipple is at its minimum value. The maximum minor diameter is such as to result in a *P*/8 flat at the root of the nipple thread at maximum pitch diameter, but may be such as what would be produced by the use of a worn or rounded threading tool. This is the maximum minor diameter shown in Fig. 1 and is the diameter on which the minor diameter tolerance formula shown above is based. In practice, the minor diameter of an external thread is satisfactory when accepted by a gage or gaging method that represents the maximum material condition of the internal thread.

3.2 For Coupling Swivel (Internal) Threads (except NHR)

(*a*) Minor Diameter Tolerance = 2 × Pitch Diameter Tolerance. The minimum minor diameter of the coupling swivel is such as to result in a basic flat of *P*/8 at the crest when the pitch diameter of the coupling swivel is at its minimum value.

(*b*) Major Diameter Tolerance = Pitch Diameter Tolerance + 2*h*/9. The minimum major diameter of the coupling swivel is such as to result in a basic flat of *P*/8 at the root of the thread when the pitch diameter is at its minimum value.

4 ACCEPTABILITY

Acceptability of product screw threads, based on the method specified, shall be in accordance with ANSI/ASME B1.3M. Gages and gaging are in accordance with ANSI/ASME B1.2. Gage dimensions are specified in Tables 6, 7, and 8. The maximum minor diameter of the GO thread gage for external product threads is equal to the minimum minor diameter of the internal product thread. All other gage dimensions are calculated in accordance with ANSI/ASME B1.2. Gage design shall be in accordance with American National Standard ASME/ANSI B47.1.

Copyright ASME International
Provided by IHS under license with ASME
No reproduction or networking permitted without license from IHS
Not for Resale

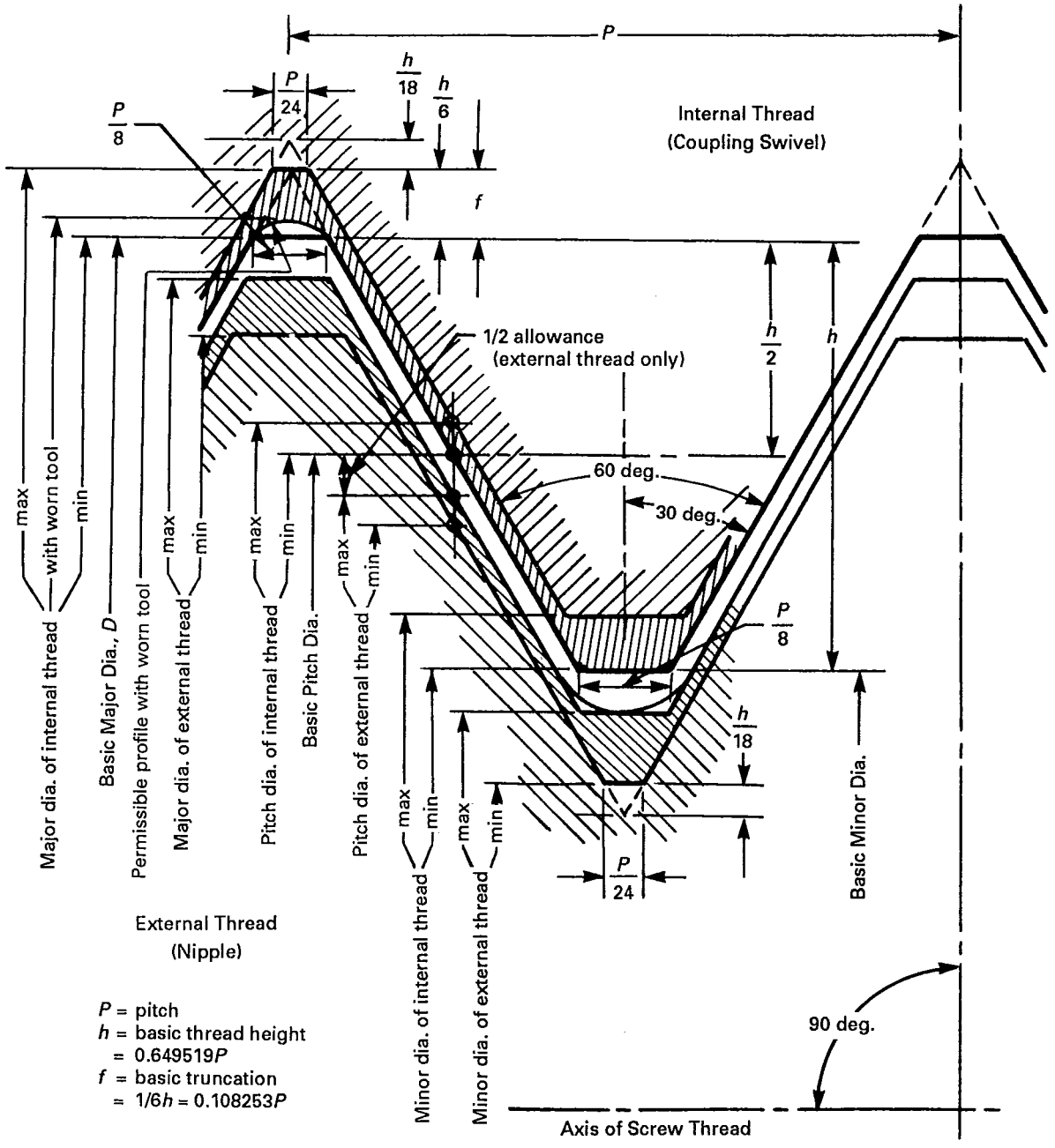

(Heavy line shows basic size)

FIG. 1 THREAD FORM FOR AMERICAN NATIONAL STANDARD HOSE COUPLING THREADS, NPSH, NH, AND NHR

Copyright ASME International
Provided by IHS under license with ASME
No reproduction or networking permitted without license from IHS
Not for Resale

TABLE 1 DESIGN DIMENSIONS OF AMERICAN NATIONAL STANDARD HOSE COUPLING THREADS, NPSH, NH, AND NHR

Nominal Size of Hose	Threads per Inch, tpi	Thread Designation	Service	Pitch	Basic Height of Thread	Maximum Nipple Dimensions (External Thread)				Minimum (Basic) Coupling Dimensions (Internal Thread)		
						Allowance	Major Diameter	Pitch Diameter	Minor Diameter	Minor Diameter	Pitch Diameter	Major Diameter
1	2	3	4	5	6	7	8	9	10	11	12	13
½, ⅝, ¾	11.5	¾–11.5NH	Garden hose	0.08696	0.05648	0.0100	1.0625	1.0060	0.9495	0.9595	1.0160	1.0725
½, ⅝, ¾	11.5	¾–11.5NHR	Garden hose formed thread	0.08696	0.05648	0.0160	1.0520	1.0100	0.9495	0.9720	1.0160	1.0680
½	14	½–14NPSH	Steam, air, water, and all other hose connections to be made up with standard pipe threads.	0.07143	0.04639	0.0075	0.8248	0.7784	0.7320	0.7395	0.7859	0.8323
¾	14	¾–14NPSH		0.07143	0.04639	0.0075	1.0353	0.9889	0.9425	0.9500	0.9964	1.0428
1	11.5	1–11.5NPSH		0.08696	0.05648	0.0100	1.2951	1.2386	1.1821	1.1921	1.2486	1.3051
1¼	11.5	1¼–11.5NPSH		0.08696	0.05648	0.0100	1.6399	1.5834	1.5269	1.5369	1.5934	1.6499
1½	11.5	1½–11.5NPSH		0.08696	0.05648	0.0100	1.8788	1.8223	1.7658	1.7758	1.8323	1.8888
2	11.5	2–11.5NPSH		0.08696	0.05648	0.0100	2.3528	2.2963	2.2398	2.2498	2.3063	2.3628
2½	8	2½–8NPSH		0.12500	0.08119	0.0120	2.8434	2.7622	2.6810	2.6930	2.7742	2.8554
3	8	3–8NPSH		0.12500	0.08119	0.0120	3.4697	3.3885	3.3073	3.3193	3.4005	3.4817
3½	8	3½–8NPSH		0.12500	0.08119	0.0120	3.9700	3.8888	3.8076	3.8196	3.9008	3.9820
4	8	4–8NPSH		0.12500	0.08119	0.0120	4.4683	4.3871	4.3059	4.3179	4.3991	4.4803
4 [Note (1)]	6	4–6NH(SPL)	Marine applications	0.16667	0.10825	0.0201	4.9082	4.7999	4.6916	4.7117	4.8200	4.9283

NOTE:
(1) Data on the 4–6NH(SPL) thread are included since this thread is used extensively aboard ship by the Navy Department.

Copyright ASME International
Provided by IHS under license with ASME
No reproduction or networking permitted without license from IHS
Not for Resale

TABLE 2 PRODUCT EXTERNAL THREAD LIMITS OF SIZE AND TOLERANCES FOR AMERICAN NATIONAL STANDARD HOSE COUPLING THREADS, NPSH, NH, AND NHR NIPPLES

Nominal Size of Hose	Threads per Inch, tpi	Thread Designation	Service	Pitch	Basic Height of Thread	Nipple (External) Thread						
						Major Diameter			Pitch Diameter			Minor Diameter [Note (1)]
						Max	Min	Tol.	Max	Min	Tol.	Max
1	2	3	4	5	6	7	8	9	10	11	12	13
½, ⅝, ¾	11.5	¾–11.5NH	Garden hose	0.08696	0.05648	1.0625	1.0455	0.0170	1.0060	0.9975	0.0085	0.9495
½, ⅝, ¾	11.5	¾–11.5NHR	Garden hose formed thread	0.08696	0.05648	1.0520	1.0350	0.0170	0.0100	0.9930	0.0170	0.9495
½	14	½–14NPSH	Steam, air, and all other hose connections to be made up with standard pipe threads.	0.07143	0.04639	0.8248	0.8108	0.0140	0.7784	0.7714	0.0070	0.7320
¾	14	¾–14NPSH		0.07143	0.04639	1.0353	1.0213	0.0140	0.9889	0.9819	0.0070	0.9425
1	11.5	1–11.5NPSH		0.08696	0.05648	1.2951	1.2781	0.0170	1.2386	1.2301	0.0085	1.1821
1¼	11.5	1¼–11.5NPSH		0.08696	0.05648	1.6399	1.6229	0.0170	1.5834	1.5749	0.0085	1.5269
1½	11.5	1½–11.5NPSH		0.08696	0.05648	1.8788	1.8618	0.0170	1.8223	1.8138	0.0085	1.7658
2	11.5	2–11.5NPSH		0.08696	0.05648	2.3528	2.3358	0.0170	2.2963	2.2878	0.0085	2.2398
2½	8	2½–8NPSH		0.12500	0.08119	2.8434	2.8212	0.0222	2.7622	2.7511	0.0111	2.6810
3	8	3–8NPSH		0.12500	0.08119	3.4697	3.4475	0.0222	3.3885	3.3774	0.0111	3.3073
3½	8	3½–8NPSH		0.12500	0.08119	3.9700	3.9478	0.0222	3.8888	3.8777	0.0111	3.8076
4	8	4–8NPSH		0.12500	0.08119	4.4683	4.4461	0.0222	4.3871	4.3760	0.0111	4.3059
4 [Note (2)]	6	4–6NH(SPL)	Marine applications	0.16667	0.10825	4.9082	4.8722	0.0360	4.7999	4.7819	0.0180	4.6916

NOTES:

(1) Dimensions given for the maximum minor diameter of the nipple are figured to the intersection of the worn tool arc with a centerline through crest and root. For reference only the minimum minor diameter of the nipple shall be that corresponding to a flat at the minor diameter of the minimum nipple equal to $\frac{1}{24} \times P$ and may be determined by subtracting $1\frac{2}{9} \times h$ (or $0.7939P$) from the minimum pitch diameter of the nipple.

(2) Data on the 4–6NH(SPL) thread are included since this thread is used extensively aboard ship by the Navy Department.

Copyright ASME International
Provided by IHS under license with ASME
No reproduction or networking permitted without license from IHS
Not for Resale

TABLE 3 PRODUCT INTERNAL THREAD LIMITS OF SIZE AND TOLERANCES FOR AMERICAN NATIONAL STANDARD HOSE COUPLING THREADS, NPSH, NH, AND NHR COUPLING SWIVELS

Nominal Size of Hose	Threads per Inch, tpi	Thread Designation	Service	Pitch	Basic Height of Thread	Coupling (Internal) Thread						
						Minor Diameter			Pitch Diameter			Major Diameter [Note (1)]
						Min	Max	Tol.	Min	Max	Tol.	Min.
1	2	3	4	5	6	7	8	9	10	11	12	13
½, ⅝, ¾	11.5	¾–11.5NH	Garden hose	0.08696	0.05648	0.9595	0.9765	0.0170	1.0160	1.0245	0.0085	1.0725
½, ⅝, ¾	11.5	¾–11.5NHR	Garden hose formed thread	0.08696	0.05648	0.9720	0.9930	0.0210	1.0160	1.0280	0.0120	1.0680
½	14	½–14NPSH	Steam, air, water, and all other hose connections to be made up with standard pipe threads.	0.07143	0.04639	0.7395	0.7535	0.0140	0.7859	0.7929	0.0070	0.8323
¾	14	¾–14NPSH		0.07143	0.04639	0.9500	0.9640	0.0140	0.9964	1.0034	0.0070	1.0428
1	11.5	1–11.5NPSH		0.08696	0.05648	1.1921	1.2091	0.0170	1.2486	1.2571	0.0085	1.3051
1¼	11.5	1¼–11.5NPSH		0.08696	0.05648	1.5369	1.5539	0.0170	1.5934	1.6019	0.0085	1.6499
1½	11.5	1½–11.5NPSH		0.08696	0.05648	1.7758	1.7928	0.0170	1.8323	1.8408	0.0085	1.8888
2	11.5	2–11.5NPSH		0.08696	0.05648	2.2498	2.2668	0.0170	2.3063	2.3148	0.0085	2.3628
2½	8	2½–8NPSH		0.12500	0.08119	2.6930	2.7152	0.0222	2.7742	2.7853	0.0111	2.8554
3	8	3–8NPSH		0.12500	0.08119	3.3193	3.3415	0.0222	3.4005	3.4116	0.0111	3.4817
3½	8	3½–8NPSH		0.12500	0.08119	3.8196	3.8418	0.0222	3.9008	3.9119	0.0111	3.9820
4	8	4–8NPSH		0.12500	0.08119	4.3179	4.3401	0.0222	4.3991	4.4102	0.0111	4.4803
4 [Note (2)]	6	4–6NH(SPL)	Marine applications	0.16667	0.10825	4.7117	4.7477	0.0360	4.8200	4.8380	0.0180	4.9283

NOTES:

(1) Dimensions for the minimum major diameter of the coupling correspond to the basic flat ($\frac{1}{8} \times P$), and the profile at the major diameter produced by a worn tool must not fall below the basic outline. For reference only the maximum major diameter of the coupling shall be that corresponding to a flat at the major diameter of the maximum coupling equal to $\frac{1}{24} \times P$ and may be determined by adding $1\frac{3}{8} \times h$ (or $0.7939P$) to the maximum pitch diameter of the coupling.

(2) Data on the 4–6NH(SPL) thread are included since this thread is used extensively aboard ship by the Navy Department.

Copyright ASME International
Provided by IHS under license with ASME
No reproduction or networking permitted without license from IHS
Not for Resale

TABLE 4 LENGTHS OF THREADS FOR AMERICAN NATIONAL STANDARD HOSE COUPLING THREADS, NPSH, NH, AND NHR

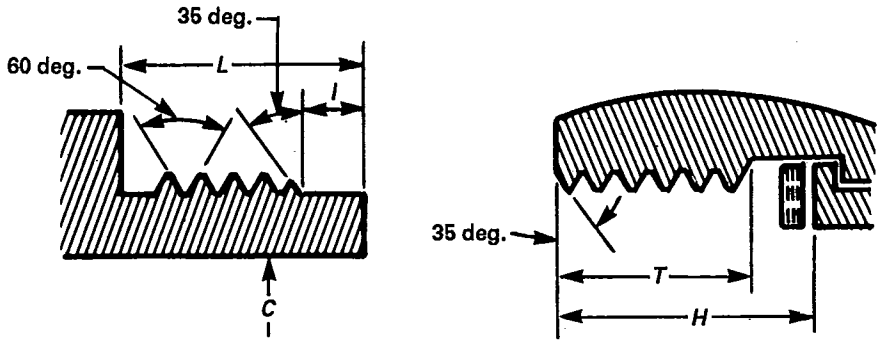

Nominal Size of Hose	Thread per Inch, tpi	Thread Designation	Service	Inside Diameter of Nipple, *C*	Approximate Outside Diameter of External Thread	Length of Nipple *L*	Length of Pilot *l*	Depth of Coupling, *H*	Thread Length for Coupling, *T*	Approximate Number of Threads in Length, *T*
1	2	3	4	5	6	7	8	9	10	11
½, ⅝, ¾	11.5	¾–11.5NH	Garden hose	25/32	1 1/16	9/16	1/8	17/32	3/8	4¼
½, ⅝, ¾	11.5	¾–11.5NHR	Garden hose formed thread	25/32	1 1/16	9/16	1/8	17/32	3/8	4¼
½	14	½–14NPSH	Steam, air, water, and all other hose connections to be made up with standard pipe threads.	17/32	13/16	½	1/8	15/32	5/16	4¼
¾	14	¾–14NPSH		25/32	1 1/32	9/16	1/8	17/32	3/8	5¼
1	11.5	1–11.5NPSH		1 1/32	1 9/32	9/16	5/32	17/32	3/8	4¼
1¼	11.5	1¼–11.5NPSH		1 9/32	1 5/8	5/8	5/32	19/32	15/32	5½
1½	11.5	1½–11.5NPSH		1 17/32	1 7/8	5/8	5/32	19/32	15/32	5½
2	11.5	2–11.5NPSH		2 1/32	2 11/32	¾	3/16	23/32	19/32	6¾
2½	8	2½–8NPSH		2 17/32	2 27/32	1	¼	15/16	11/16	5½
3	8	3–8NPSH		3 1/32	3 15/32	1 1/8	¼	1 1/16	13/16	6½
3½	8	3½–8NPSH		3 17/32	3 31/32	1 1/8	¼	1 1/16	13/16	6½
4	8	4–8NPSH		4 1/32	4 15/32	1 1/8	¼	1 1/16	13/16	6½
4	6	4–6NH(SPL)	Marine applications	4	4 29/32	1 1/8	5/16	1 1/16	¾	4½

Copyright ASME International
Provided by IHS under license with ASME
No reproduction or networking permitted without license from IHS
Not for Resale

TABLE 5 VARIATIONS IN LEAD AND HALF-ANGLE CONSUMING ONE-HALF OF PITCH DIAMETER TOLERANCES FOR AMERICAN NATIONAL STANDARD HOSE COUPLING THREADS, NPSH, NH AND NHR

Nominal Size of Hose	Threads per Inch, tpi	Thread Designation	Pitch Diameter Tolerance [Note (1)]	Lead Variation Consuming One-Half of Pitch Diameter Tolerance [Notes (1) and (2)]	Half-Angle Variation Consuming One-Half of Pitch Diameter Tolerance [Notes (2) and (3)]	
1	2	3	4	5	6	
					deg.	min
½, ⅝, ¾	11.5	¾–11.5 NH	0.0085	0.0025	1	52
½, ⅝, ¾	11.5	¾–11.5 NHR (external)	0.0170	0.0049	3	44
½, ⅝, ¾	11.5	¾–11.5 NHR (internal)	0.0120	0.0035	2	38
½	14	½–14 NPSH	0.0070	0.0020	1	52
¾	14	¾–14 NPSH	0.0070	0.0020	1	52
1	11.5	1–11.5 NPSH	0.0085	0.0025	1	52
1¼	11.5	1¼–11.5 NPSH	0.0085	0.0025	1	52
1½	11.5	1½–11.5 NPSH	0.0085	0.0025	1	52
2	11.5	2–11.5 NPSH	0.0085	0.0025	1	52
2½	8	2½–8 NPSH	0.0111	0.0032	1	42
3	8	3–8 NPSH	0.0111	0.0032	1	42
3½	8	3½–8 NPSH	0.0111	0.0032	1	42
4	8	4–8 NPSH	0.0111	0.0032	1	42
4 [Note (3)]	6	4–6 NH (SPL)	0.0180	0.0052	2	4

NOTES:

(1) The tolerances specified for pitch diameter include all variation of pitch diameter, lead, and angle. The full tolerance cannot, therefore, be used on pitch diameter unless the lead and angle of the thread are perfect. The last two columns give, for information, the variations in lead and angle, each of which can be compensated for by half the pitch-diameter tolerance given in column 4. If lead and angle variations both exist to the amount tabulated, the pitch diameter of a nipple, for example, must be reduced by the full tolerances or it will not enter the GO gage.

(2) Between any two threads not farther apart then the length of engagement.

(3) Values are based upon diameter equivalents of half-angle variations equal to $1.5P \tan \Delta\alpha$ where P is the thread pitch and $\Delta\alpha$ is half-angle variation. This relationship is an approximation where half-angle variations of the flanks are equal.

Copyright ASME International
Provided by IHS under license with ASME
No reproduction or networking permitted without license from IHS
Not for Resale

TABLE 6 GAGE LIMITS OF SIZE OF RING GAGES FOR EXTERNAL (NIPPLE) THREADS FOR AMERICAN NATIONAL STANDARD HOSE COUPLING THREADS, NPSH, NH, AND NHR

Nominal Size of Hose	Threads per Inch, tpi	Thread Designation		X Thread Ring Gages				Z Plain Ring Gages	
				GO		NOT GO (LO)		Major Diameter	
				Pitch Diameter	Minor Diameter [Note (1)]	Pitch Diameter	Minor Diameter	GO	NOT GO
Gage Tolerance →				−	−	+	+	−	+
1	2	3	4	5	6	7	8	9	10
½, ⅝, ¾	11.5	¾–11.5 NH	max.	1.0060	0.9595	0.9978	0.9793	1.06250	1.04562
			min.	1.0057	0.9589	0.9975	0.9787	1.06238	1.04550
½, ⅝, ¾	11.5	¾–11.5 NHR	max.	1.0100	0.9720	0.9933	0.9748	1.05200	1.03512
			min.	1.0097	0.9726	0.9930	0.9742	1.05188	1.03500
½	14	½–14 NPSH	max.	0.7784	0.7395	0.7717	0.7565	0.82480	0.81090
			min.	0.7781	0.7389	0.7714	0.7559	0.82470	0.81080
¾	14	¾–14 NPSH	max.	0.9889	0.9500	0.9822	0.9670	1.03530	1.02142
			min.	0.9886	0.9494	0.9819	0.9664	1.03518	1.02130
1	11.5	1–11.5 NPSH	max.	1.2386	1.1921	1.2304	1.2119	1.29510	1.27822
			min.	1.2383	1.1915	1.2301	1.2113	1.29498	1.27810
1¼	11.5	1¼–11.5 NPSH	max.	1.5834	1.5369	1.5753	1.5567	1.63990	1.62306
			min.	1.5830	1.5363	1.5749	1.5561	1.63974	1.62290
1½	11.5	1½–11.5 NPSH	max.	1.8223	1.7758	1.8142	1.7956	1.87880	1.86196
			min.	1.8219	1.7752	1.8138	1.7950	1.87864	1.86180
2	11.5	2–11.5 NPSH	max.	2.2963	2.2498	2.2882	2.2696	2.35280	2.33596
			min.	2.2959	2.2492	2.2878	2.2690	2.35264	2.33580
2½	8	2½–8 NPSH	max.	2.7622	2.6930	2.7516	2.7247	2.84340	2.82140
			min.	2.7617	2.6923	2.7511	2.7240	2.84320	2.82120
3	8	3–8 NPSH	max.	3.3885	3.3193	3.3779	3.3510	3.46970	3.44770
			min.	3.3880	3.3186	3.3774	3.3503	3.46950	3.44750
3½	8	3½–8 NPSH	max.	3.8888	3.8196	3.8782	3.8513	3.97000	3.94800
			min.	3.8883	3.8189	3.8777	3.8506	3.96980	3.94780
4	8	4–8 NPSH	max.	4.3871	4.3179	4.3766	4.3500	4.46830	4.44630
			min.	4.3865	4.3168	4.3760	4.3489	4.46810	4.44610
4 [Note (1)]	6	4–6 NH(SPL)	max.	4.7999	4.7117	4.7825	4.7464	4.90820	4.87245
			min.	4.7993	4.7109	4.7819	4.7458	4.90795	4.87220

NOTE:
(1) Gage limit values in this table have been obtained in accordance with ANSI/ASME B1.2 except for the values shown in Col. 6. The max values shown in Col. 6 are values for the min minor diameter of the internal thread.

Copyright ASME International
Provided by IHS under license with ASME
No reproduction or networking permitted without license from IHS
Not for Resale

TABLE 7 GAGE LIMITS OF SIZE OF PLUG GAGES FOR INTERNAL (COUPLING SWIVEL) THREADS FOR AMERICAN NATIONAL STANDARD HOSE COUPLING THREAD, NPSH, NH, AND NHR

Nominal Size of Hose	Threads per Inch, tpi	Thread Designation		X Thread Plug Gages				Z Plain Plug Gages	
				GO		NOT GO (HI)		Minor Diameter	
				Major Diameter	Pitch Diameter	Major Diameter	Pitch Diameter	GO	NOT GO
Gage Tolerance →				+	+	−	−	+	−
1	2	3	4	5	6	7	8	9	10
½, ⅝, ¾	11.5	¾–11.5NH	max.	1.0731	1.0163	1.0622	1.0245	0.95962	0.97650
			min.	1.0725	1.0160	1.0616	1.0242	0.95950	0.97638
½, ⅝, ¾	11.5	¾–11.5NHR	max.	1.0686	1.0163	1.0657	1.0280	0.97212	0.99300
			min.	1.0680	1.0160	1.0651	1.0277	0.97200	0.99288
½	14	½–14NPSH	max.	0.8329	0.7862	0.8238	0.7929	0.73960	0.75350
			min.	0.8323	0.7859	0.8232	0.7926	0.73950	0.75340
¾	14	¾–14NPSH	max.	1.0434	0.9967	1.0343	1.0034	0.95012	0.96400
			min.	1.0428	0.9964	1.0337	1.0031	0.95000	0.96388
1	11.5	1–11.5NPSH	max.	1.3057	1.2489	1.2948	1.2571	1.19222	1.20910
			min.	1.3051	1.2486	1.2942	1.2568	1.19210	1.20898
1¼	11.5	1¼–11.5NPSH	max.	1.6505	1.5938	1.6396	1.6019	1.53706	1.55390
			min.	1.6499	1.5934	1.6390	1.6015	1.53690	1.55374
1½	11.5	1½–11.5NPSH	max.	1.8894	1.8327	1.8785	1.8408	1.77596	1.79280
			min.	1.8888	1.8323	1.8779	1.8404	1.77580	1.79264
2	11.5	2–11.5NPSH	max.	2.3634	2.3067	2.3525	2.3148	2.24996	2.26680
			min.	2.3628	2.3063	2.3519	2.3144	2.24980	2.26664
2½	8	2½–8NPSH	max.	2.8561	2.7747	2.8394	2.7853	2.69320	2.71520
			min.	2.8554	2.7742	2.8387	2.7848	2.69300	2.71500
3	8	3–8NPSH	max.	3.4824	3.4010	3.4657	3.4116	3.31950	3.34150
			min.	3.4817	3.4005	3.4650	3.4111	3.31930	3.34130
3½	8	3½–8NPSH	max.	3.9827	3.9013	3.9660	3.9119	3.81980	3.84180
			min.	3.9820	3.9008	3.9653	3.9114	3.81960	3.84160
4	8	4–8NPSH	max.	4.4814	4.3997	4.4643	4.4102	4.31810	4.34010
			min.	4.4803	4.3991	4.4632	4.4096	4.31790	4.33990
4	6	4–6NH(SPL)	max.	4.9296	4.8206	4.9102	4.8380	4.71195	4.74770
			min.	4.9283	4.8200	4.9089	4.8374	4.71170	4.74745

GENERAL NOTE: Gage limit values in this table have been obtained in accordance with ANSI/ASME B1.2.

Copyright ASME International
Provided by IHS under license with ASME
No reproduction or networking permitted without license from IHS
Not for Resale

TABLE 8 SETTING PLUG GAGE LIMITS OF SIZE FOR RING GAGES FOR AMERICAN NATIONAL STANDARD HOSE COUPLING THREADS, NPSH, NH, AND NHR[1]

Nominal Size of Hose	Threads per Inch, tpi	Thread Designation		X Truncated Setting Plugs [Note (2)]						X Full Form Setting Plugs [Notes (2), (3)]	
				Plug for GO Thread Gage			Plug for NOT GO (LO) Thread Gage			Major Diameter	
				Major Diameter		Pitch Diameter	Major Diameter		Pitch Diameter	Plug for GO Thread Gage	Plug for NOT GO (LO) Thread Gage
				Truncated	Full		Truncated	Full			
Gage Tolerance →				−	+	−	−	+	+	+	+
1	2	3	4	5	6	7	8	9	10	11	12
½, ⅝, ¾	11.5	¾–11.5NH	max.	1.0492	1.0631	1.0060	1.0352	1.0631	0.9978	1.0631	1.0631
			min.	1.0486	1.0625	1.0057	1.0346	1.0625	0.9975	1.0625	1.0625
½, ⅝, ¾	11.5	¾–11.5NHR	max.	1.0387	1.0526	1.0100	1.0307	1.0526	0.9933	1.0526	1.0526
			min.	1.0381	1.0520	1.0097	1.0301	1.0520	0.9930	1.0520	1.0520
½	14	½–14NPSH	max.	0.8133	0.8254	0.7784	0.8023	0.8254	0.7717	0.8254	0.8254
			min.	0.8127	0.8248	0.7781	0.8017	0.8248	0.7714	0.8248	0.8248
¾	14	¾–14NPSH	max.	1.0238	1.0359	0.9889	1.0128	1.0359	0.9822	1.0359	1.0359
			min.	1.0232	1.0353	0.9886	1.0122	1.0353	0.9819	1.0353	1.0353
1	11.5	1–11.5NPSH	max.	1.2818	1.2957	1.2386	1.2678	1.2957	1.2304	1.2957	1.2957
			min.	1.2812	1.2951	1.2383	1.2672	1.2951	1.2301	1.2951	1.2951
1¼	11.5	1¼–11.5NPSH	max.	1.6266	1.6405	1.5834	1.6126	1.6405	1.5753	1.6405	1.6405
			min.	1.6260	1.6399	1.5830	1.6210	1.6399	1.5749	1.6399	1.6399
1½	11.5	1½–11.5NPSH	max.	1.8655	1.8794	1.8223	1.8515	1.8794	1.8142	1.8794	1.8794
			min.	1.8649	1.8788	1.8219	1.8509	1.8788	1.8138	1.8788	1.8788
2	11.5	2–11.5NPSH	max.	2.3395	2.3534	2.2963	2.3255	2.3534	2.2882	2.3534	2.3534
			min.	2.3389	2.3528	2.2959	2.3249	2.3528	2.2878	2.3528	2.3528
2½	8	2½–8NPSH	max.	2.8263	2.8440	2.7622	2.8052	2.8441	2.7516	2.8441	2.8441
			min.	2.8256	2.8434	2.7617	2.8045	2.8434	2.7511	2.8434	2.8434
3	8	3–8NPSH	max.	3.4526	2.4704	3.3885	3.4315	3.4704	3.3779	3.4704	3.4704
			min.	3.4519	2.4697	3.3880	3.4308	3.4697	3.3774	3.4697	3.4697
3½	8	3½–8NPSH	max.	3.9529	3.9707	3.8888	3.9318	3.9707	3.8782	3.9707	3.9707
			min.	3.9522	3.9700	3.8883	3.9311	3.9700	3.8777	3.9700	3.9700
4	8	4–8NPSH	max.	4.4512	4.4694	4.3871	4.4301	4.4694	4.3766	4.4694	4.4694
			min.	4.4501	4.4683	4.3865	4.4290	4.4683	3.3760	4.4683	4.4683
4	6	4–6NH(SPL)	max.	4.8872	4.9090	4.7999	4.8541	4.9090	4.7825	4.9090	4.9090
			min.	4.8864	4.9082	4.7993	4.8533	4.9082	4.7819	4.9082	4.9082

NOTES:
(1) Gage limit values in this table have been obtained in accordance with ANSI/ASME B1.2.
(2) Lead, flank angle, and taper are to be held to Class "W" tolerances as specified in ANSI/ASME B1.2.
(3) Pitch diameter limits for full form (GO) setting plugs are the same as those shown in column 7. Pitch diameter limits for basic-crest NO GO (LO) setting plugs are the same as those shown in column 10.

Copyright ASME International
Provided by IHS under license with ASME
No reproduction or networking permitted without license from IHS
Not for Resale

APPENDIX A
AMERICAN NATIONAL FIRE-HOSE COUPLING THREADS

(This Appendix is not part of ASME B1.20.7-1991 and is included for information purposes only.)

A1 SCOPE

This Appendix is provided for easy reference concerning American National Fire-Hose Coupling Thread dimensions for product threads. For further information and gage specifications see American National Standard ANSI/NFPA 1963.

TABLE A1 BASIC DIMENSIONS OF AMERICAN NATIONAL FIRE-HOSE COUPLING THREADS, NH

Nominal Size of Connection	Threads per Inch (tpi) [Note (1)]	Thread Designation (NH) [Note (1)]	Pitch (*P*)	Basic Thread Height (*h*)	External Thread Dimensions (Nipple)				Minimum Internal Thread Dimensions		
					Allowance	Maximum Major Diameter	Maximum Pitch Diameter	Maximum Minor Diameter	Minimum Minor Diameter, *D*-2*h*	Basic Pitch Diameter, *D*-*h*	Basic Major Diameter, *D*
1	2	3	4	5	6	7	8	9	10	11	12
¾	8	0.75–8 NH	0.12500	0.08119	0.0120	1.3750	1.2938	1.2126	1.2246	1.3058	1.3870
1	8	1–8 NH	0.12500	0.08119	0.0120	1.3750	1.2938	1.2126	1.2246	1.3058	1.3870
1½	9	1.5–9 NH	0.11111	0.07217	0.0120	1.9900	1.9178	1.8457	1.8577	1.9298	2.0020
2½	7.5	2.5–7.5 NH	0.13333	0.08660	0.0150	3.0686	2.9820	2.8954	2.9104	2.9970	3.0836
3	6	3–6 NH	0.16667	0.10825	0.0150	3.6239	3.5156	3.4073	3.4223	3.5306	3.6389
3½	6	3.5–6 NH	0.16667	0.10825	0.0200	4.2439	4.1356	4.0273	4.0473	4.1556	4.2639
4	4	4–4 NH	0.25000	0.16238	0.0250	5.0109	4.8485	4.6861	4.7111	4.8735	5.0359
4½	4	4.5–4 NH	0.25000	0.16238	0.0250	5.7609	5.5985	5.4361	5.4611	4.6235	5.7859
5	4	5–4 NH	0.25000	0.16238	0.0250	6.2600	6.0976	5.9352	5.9602	6.1226	6.2850
6	4	6–4 NH	0.25000	0.16238	0.0250	7.0250	6.8626	6.7002	6.7252	6.8876	7.0500

NOTE:
(1) All other values are given in inches.

Copyright ASME International
Provided by IHS under license with ASME
No reproduction or networking permitted without license from IHS
Not for Resale

TABLE A2 THREAD LIMITS OF SIZE AND TOLERANCES FOR NH INTERNAL THREADS (COUPLINGS)

Nominal Size of Connection	Threads per Inch (tpi) [Note (1)]	Thread Designation (NH) [Note (1)]	Pitch (*P*)	Basic Thread Height (*h*)	Internal Thread (Coupling)						
					Minor Diameter			Pitch Diameter			Major Diameter [Note (2)]
					Minimum	Maximum	Tolerance	Minimum	Maximum	Tolerance	Minimum
1	2	3	4	5	6	7	8	9	10	11	12
¾	8	0.75–8 NH	0.12500	0.08119	1.2246	1.2468	0.0222	1.3058	1.3169	0.0111	1.3870
1	8	1–8 NH	0.12500	0.08119	1.2246	1.2468	0.0222	1.3058	1.3169	0.0111	1.3870
1½	9	1.5–9 NH	0.11111	0.07217	1.8577	1.8799	0.0222	1.9298	1.9409	0.0111	2.0020
2½	7.5	2.5–7.5 NH	0.13333	0.08660	2.9104	2.9424	0.0320	2.9970	3.0130	0.0160	3.0836
3	6	3–6 NH	0.16667	0.10825	3.4223	3.4583	0.0360	3.5306	3.5486	0.0180	3.6389
3½	6	3.5–6 NH	0.16667	0.10825	4.0473	4.0833	0.0360	4.1556	4.1736	0.0180	4.2639
4	4	4–4 NH	0.25000	0.16238	4.7111	4.7611	0.0500	4.8735	4.8985	0.0250	5.0359
4½	4	4.5–4 NH	0.25000	0.16238	5.4611	5.5111	0.0500	5.6235	5.6485	0.0250	5.7859
5	4	5–4 NH	0.25000	0.16238	5.9602	6.0102	0.0500	6.1226	6.1476	0.0250	6.2850
6	4	6–4 NH	0.25000	0.16238	6.7252	6.7752	0.0500	6.8876	6.9126	0.0250	7.0500

NOTES:
(1) All other values are given in inches.
(2) Dimensions for the minimum major diameter of the coupling correspond to the basic flat *P*/8, and the profile as the major diameter produced by a worn tool must not fall below the basic outline. The maximum major diameter of the coupling shall be that corresponding to a flat at the major diameter of the maximum coupling equal to *P*/24 and may be determined by adding 11 *h*/9 (or 0.7939 *P*) to the maximum pitch diameter of the coupling.

TABLE A3 LIMITS OF SIZE AND TOLERANCES OF NH EXTERNAL THREADS (NIPPLES)

Nominal Size of Connection	Threads per Inch (tpi) [Note (1)]	Thread Designation (NH) [Note (1)]	Pitch (*P*)	Basic Thread Height (*h*)	External Thread (Nipple)						
					Major Diameter			Pitch Diameter			Minor Diameter [Note (2)]
					Maximum	Minimum	Tolerance	Maximum	Minimum	Tolerance	Maximum
1	2	3	4	5	6	7	8	9	10	11	12
¾	8	0.75–8 NH	0.12500	0.08119	1.3750	1.3528	0.0222	1.2938	1.2827	0.0111	1.2126
1	8	1–8 NH	0.12500	0.08119	1.3750	1.3528	0.0222	1.2938	1.2827	0.0111	1.2126
1½	9	1.5–9 NH	0.11111	0.07217	1.9900	1.9678	0.0222	1.9178	1.9067	0.0111	1.8457
2½	7.5	2.5–7.5 NH	0.13333	0.08660	3.0686	3.0366	0.0320	2.9820	2.9660	0.0160	2.8954
3	6	3–6 NH	0.16667	0.10825	3.6239	3.5879	0.0360	3.5156	3.4976	0.0180	3.4073
3½	6	3.5–6 NH	0.16667	0.10825	4.2439	4.2079	0.0360	4.1356	4.1176	0.0180	4.0273
4	4	4–4 NH	0.25000	0.16238	5.0109	4.9609	0.0500	4.8485	4.8235	0.0250	4.6861
4½	4	4.5–4 NH	0.25000	0.16238	5.7609	5.7109	0.0500	5.5985	5.5735	0.0250	5.4361
5	4	5–4 NH	0.25000	0.16238	6.2600	6.2100	0.0500	6.0976	6.0726	0.0250	5.9352
6	4	6–4 NH	0.25000	0.16238	7.0250	6.9750	0.0500	6.8626	6.8376	0.0250	6.7002

NOTES:
(1) All other values are given in inches.
(2) Dimensions given for the maximum minor diameter of the nipple are figured to the intersection of the worn tool arc with a centerline through crest and root. The minimum minor diameter of the nipple shall be that corresponding to a flat at the minor diameter of the minimum nipple equal to *P*/24 and may be determined by subtracting 11 *h*/9 (or 0.7939 *P*) from the minimum pitch diameter of the nipple.

Copyright ASME International
Provided by IHS under license with ASME
No reproduction or networking permitted without license from IHS
Not for Resale

AMERICAN NATIONAL STANDARDS FOR SCREW THREADS

(Published by The American Society of Mechanical Engineers)

TITLE OF STANDARD

Unified Inch Screw Threads (UN and UNR Thread Form) B1.1-1989
Gages and Gaging for Unified Inch Screw Threads ..... B1.2-1983(R1991)
Screw Thread Gaging Systems for Dimensional
Acceptability — Inch and Metric Screw Threads (UN, UNR, UNJ, M, and MJ) B1.3M-1986
Acme Screw Threads B1.5-1988
Nomenclature, Definitions, and Letter Symbols for Screw Threads B1.7M-1984
Stub Acme Screw Threads B1.8-1988
Buttress Inch Screw Threads 7°/45° Form With 0.6 Pitch Basic Height of
Thread Engagement ..... B1.9-1973(R1985)
Unified Miniature Screw Threads ..... B1.10-1958(R1988)
Microscope Objective Thread ..... B1.11-1958(R1989)
Class 5 Interference-Fit Thread B1.12M-1987
Metric Screw Threads — M Profile ..... B1.13M-1983(R1989)
Gages and Gaging for Metric M Screw Threads B1.16M-1984
Metric Screw Threads for Commercial Mechanical
Fasteners — Boundary Profile Defined ..... B1.18M-1982(R1987)
Gages for Metric Screw Threads for Commercial Mechanical
Fasteners — Boundary Profile Defined B1.19M-1984
Pipe Threads, General Purpose (Inch) ..... B1.20.1-1983(R1992)
Dryseal Pipe Threads (Inch) ..... B1.20.3-1976(R1982)
Dryseal Pipe Threads (Metric Translation of B1.20.3-1976) ..... B1.20.4-1976(R1982)
Gaging for Dryseal Pipe Threads (Inch) B1.20.5-1991
Gaging for Dryseal Pipe Threads (Metric Translation
of B1.20.5-1978) B1.20.6M-1984
Hose Coupling Screw Threads (Inch) B1.20.7-1991
Metric Screw Threads — MJ Profile B1.21M-1978
Gages and Gaging for MJ Series Metric Screw Threads B1.22M-1985

The ASME Publications Catalog shows a complete list of all the Standards published by the Society. For a complimentary catalog, or the latest information about our publications, call 1-800-THE-ASME (1-800-843-2763).

Copyright ASME International
Provided by IHS under license with ASME
No reproduction or networking permitted without license from IHS
Not for Resale

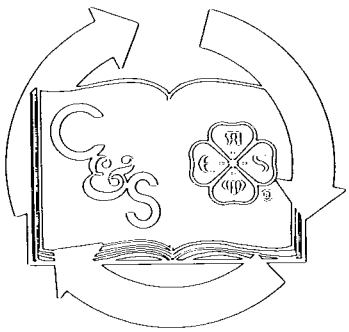

This document is printed on 50% recycled paper.

50% RECOVERED PAPER MATERIAL means paper waste generated after the completion of the papermaking process, such as postconsumer materials, text books, envelopes, bindery waste, printing waste, cutting and converting waste, butt rolls, obsolete inventories, and rejected unused stock.

ISBN #0-7918-2140-4

K01491

Copyright ASME International
Provided by IHS under license with ASME
No reproduction or networking permitted without license from IHS
Not for Resale