ADOPTION NOTICE

ANSI-B1.20.3, "Pipe Threads, Inch, Dryseal," was adopted on October 3, 1994 for use by the Department of Defense (DoD). Proposed changes by DoD activities must be submitted to the DoD Adopting Activity: Commanding Officer, Naval Construction Battalion Center, Code 156, 1000 23rd Avenue, Port Hueneme, CA 93043-4301. DoD activities may obtain copies of this standard from the Standardization Document Order Desk, 700 Robbins Avenue, Building 4D, Philadelphia, PA 19111-5094. The private sector and other Government agencies may purchase copies from the American National Standards Institute, 11 West 42nd Street, New York, NY 10036.

Custodians:
Army - GL
Navy - YD-1
Air Force - 11
DLA - IS

Adopting Activity
Navy - YD-1

AREA THDS

DISTRIBUTION STATEMENT A. Approved for public release; distribution is unlimited.

Copyright ASME International
Provided by IHS under license with ASME
No reproduction or networking permitted without license from IHS
Not for Resale

ASME B1.20.3 76 ■ 2595512 0011875 9 ■

D-90-25
REAPPROVED 82

AMERICAN NATIONAL STANDARD

Dryseal Pipe Threads

(Inch)

ANSI B1.20.3 - 1976

(REVISION AND REDESIGNATION OF B2.2-1968)

SECRETARIAT

SOCIETY OF AUTOMOTIVE ENGINEERS
THE AMERICAN SOCIETY OF MECHANICAL ENGINEERS

PUBLISHED BY

THE AMERICAN SOCIETY OF MECHANICAL ENGINEERS

United Engineering Center 345 East 47th Street New York, N. Y. 10017

Copyright ASME International
Provided by IHS under license with ASME
No reproduction or networking permitted without license from IHS

Not for Resale

No part of this document may be reproduced in any form, in an electronic retrieval system or otherwise, without the prior written permission of the publisher.

Copyright © 1977 by
THE AMERICAN SOCIETY OF MECHANICAL ENGINEERS
All Rights Reserved
Printed in U.S.A.

Copyright ASME International
Provided by IHS under license with ASME
No reproduction or networking permitted without license from IHS

Not for Resale

FOREWORD

In 1913 a Committee on the Standardization of Pipe Threads was organized for the purpose of re-editing and expanding the Briggs Standard. The American Gas Association and The American Society of Mechanical Engineers served as joint sponsors. After six years of work, this committee completed the revised standard for taper pipe thread which was published in the ASME "Transactions" of 1919, and was approved as an American Standard by the then American Engineering Standards Committee (later changed to American Standards Association) in December, 1919. It was the first standard to receive this designation under the ASA procedure, and was later republished in pamphlet form.

In the years which followed, the need for a further revision of this American Standard became evident as well as the necessity of adding to it the recent developments in pipe threading practice. Accordingly, the Sectional Committee on the Standardization of Pipe Threads, B2, was organized in 1927 under the joint sponsorship of the A.G.A. and the ASME.

During the following 15 years, several meetings were held leading to approval by the members of the Sectional Committee, of the April 1941 draft. The revision was approved by the sponsors and ASA and published as an American Standard in October 1942.

Shortly after publication of the 1942 standard, the Committee undertook preparation of a complete revision. The text and tables were re-arranged and expanded to include Dryseal pipe threads, and an extensive appendix was added to provide additional data on the application of pipe threads and to record in abbreviated form the several special methods which were established for gaging some of the various applications of pipe threads.

The resulting proposal was designated an American Standard on December 11, 1945. The section covering Dryseal Pipe Threads in ASA B2.1-1945 was deleted and developed as a separate standard designated ASA B2.2-1960, Dryseal Pipe Threads. Another updating occurred with republication as USAS B2.2-1968.

In 1973, Standards Committee B2 was absorbed by American National Standards Institute Standard Committee B1 and reorganized as subcommittee 20. A complete rewrite of the B2.2-1968 document was undertaken with the product thread data in separate documents from the gaging standards for Dryseal Pipe threads. The system of renumbering, to include metric revisions, is as follows:

ANSI B1.20.3-1976	Inch Dryseal Pipe Threads
ANSI B1.20.4-1976	Metric Dryseal Pipe Threads
ANSI B1.20.5-197	Gaging for Inch Dryseal Pipe Threads
ANSI B1.20.6-197	Gaging for Metric Dryseal Pipe Threads

Since the product thread documents are being published before completion of the new gaging standards, the gaging data in the B2.2-1968 Standard should be used until superseded by publication of the new B1.20.5 and B1.20.6 gaging standards.

ANSI B1.20.3 and B1.20.4 were approved by ANSI Committee B1 for publication as official ANSI Standards and thereupon submitted to the Secretariat and the American National Standards Institute. They were approved and formally designated as American National Standards on November 18, 1976.

Copyright ASME International
Provided by IHS under license with ASME
No reproduction or networking permitted without license from IHS
Not for Resale

AMERICAN NATIONAL STANDARDS COMMITTEE B1
Standardization and Unification of Screw Threads

(The following is the roster of the Committee at the time of approval of this standard)

Organized . . . . . June, 1921
Reorganized . . . . . February, 1929

SPONSORS: Society of Automotive Engineers
The American Society of Mechanical Engineers

SCOPE: Nomenclature of screw threads; form of threads; diameter and pitches of screws for various uses; classification of thread fits, tolerances and allowances for threaded parts; and the gaging of threads. Screw threads for fire hose couplings are not included within the scope.

T. C. Baumgartner, *Chairman*
J. B. Levy, *Vice-Chairman*
S. W. Taylor, *Secretary*

AEROSPACE INDUSTRIES ASSOCIATION OF AMERICA, INC.
Propulsion Technical Committee
D. H. Secord, Pratt & Whitney Aircraft, E. Hartford, Connecticut

National Aerospace Standards Committee
E. L. Wall, McDonell Aircraft Company, St. Louis, Missouri

AIRCRAFT LOCKNUT MANUFACTURERS ASSOCIATION
Charles Fineran, ESNA Division, American Amerace Corporation, Union, N.J.

AIR INDUSTRIES CORPORATION
Edward Clark, Air Industries Corporation, Garden Grove, California
Alex Butovich, Alternate, Air Industries Corporation, Garden Grove, California

AMERICAN MEASURING TOOL MANUFACTURERS ASSOCIATION
Dale Dodge, Pennoyer-Dodge Company, Glendale, California

AMERICAN SOCIETY OF MECHANICAL ENGINEERS, THE
Edward McHugh, Professor, Clarkson College of Technology, Potsdam, New York

ANTIFRICTION BEARING MANUFACTURERS ASSOCIATION
William J. Derner, Bearing Division, FMC Corporation, Indianapolis, Indiana

ASSOCIATION OF AMERICAN RAILROADS
Engineering Division
C. C. Herrick, New York Central System, New York, New York

BELOIT TOOL CORPORATION
Phillip V. Pastore, Beloit Tool Corporation, South Beloit, Illinois
J. O. Heinze, Alternate, Beloit Tool Corporation, South Beloit, Illinois

BENDIX CORPORATION, THE
Dale Story, The Bendix Corporation, South Beloit, Illinois

CLARK EQUIPMENT COMPANY
D. N. Badgley, Clark Equipment Company, Battle Creek, Michigan

Copyright ASME International
Provided by IHS under license with ASME
No reproduction or networking permitted without license from IHS
Not for Resale

COMPUTERS & BUSINESS EQUIPMENT MANUFACTURERS ASSOCIATION
H. G. Atwater (observer), International Business Machine Corporation, Endicott, New York

COMPRESSED GAS ASSOCIATION, INC.
M. E. Steczynski, Steczynski & Associates, Chicago, Illinois
E. A. Olsen, Alternate, Compressed Gas Associate, Inc., New York, New York

DEFENSE INDUSTRIAL SUPPLY CENTER
Eli Schwartz, Defense Industrial Supply Center, Philadelphia, Pennsylvania
Francis S. Ciccarone, Alternate, Defense Industrial Supply Center, Philadelphia, Pennsylvania

FARM & INDUSTRIAL EQUIPMENT INSTITUTE
C. W. Stockwell (observer), International Harvester Co., Hinsdale, Illinois

FORD MOTOR COMPANY
S. E. Mallen, Ford Motor Company, Dearborn, Michigan
J. F. Nagy, Alternate, Ford Motor Company, Dearborn, Michigan

GEOMETRIC TOOL CORPORATION
E. S. Zook, Geometric Tool, New Haven, Connecticut

GREENFIELD TAP & DIE DIVISION OF TRW INC.
D. J. Emanuelli, Greenfield Tape & Die, A United-Greenfield Division of TRW Inc., Greenfield, Massachusetts

HANSON-WHITNEY COMPANY, THE
S. I. Kanter, The Hanson-Whitney Company, Hartford, Connecticut

HI-SHEAR CORPORATION
M. M. Schuster, Hi-Shear Corporation, Torrance, California

INDUSTRIAL FASTENERS INSTITUTE
T. C. Baumgartner, Chairman, Standard Pressed Steel Company, Jenkintown, Pennsylvania
R. B. Belford, Industrial Fasteners Institute, Cleveland, Ohio
R. M. Harris, Alternate, Bethlehem Steel Company, Lebanon, Pennsylvania
D. D. Wheeler, Armco Steel Corporation, Kansas City, Missouri
R. W. Groover, Bethlehem Steel Company, Lebanon, Pennsylvania
K. E. McCullough, Alternate, Standard Pressed Steel Company, Jenkintown, Pennsylvania
J. C. McMurray, Russell, Burdsall & Ward Bolt & Nut Company, Port Chester, New York

JOHNSON GAGE COMPANY, THE
R. S. Chamerda, The Johnson Gage Co., Bloomfield, Connecticut
Stanley Johnson, Alternate, The Johnson Gage Co., Bloomfield, Connecticut

MANUFACTURERS STANDARDIZATION SOCIETY OF THE VALVE & FITTINGS INDUSTRY
J. R. Welshman, Grinnel Corp., Providence, Rhode Island

METAL CUTTING TOOL INSTITUTE
Tap and Die Division
C. G. Erickson, Pratt & Whitney Small Tool Division, Colt Industries, Inc., W. Hartford, Connecticut

NATIONAL AUTOMATIC SPRINKLER & FIRE CONTROL ASSOCIATION
Frank Hills, Colligan Fyr-Protexion, Indianapolis, Indiana
Ray Malek, Paul J. Gruneau Company, Milwaukee, Wisconsin

NATIONAL ELECTRICAL MANUFACTURERS ASSOCIATION
F. V. Kupchak, Westinghouse Electric Corporation, Pittsburgh, Pennsylvania
J. B. Levy, Vice-Chairman, General Electric Company, Schenectady, New York
R. L. Mancini, Alternate, National Electrical Manufacturers Association, New York, New York

NATIONAL MACHINE TOOL BUILDERS' ASSOCIATION
Thomas Lenhart, The Cleveland Twist Drill Company, Cleveland, Ohio

REED ROLLED THREAD DIE COMPANY
Joseph F. Dickson, Reed Rolled Thread Die Company, Nolden, Massachusetts

SOCIETY OF AUTOMOTIVE ENGINEERS
C. H. Baker, Jr., Muncie, Indiana
J. E. Long, GM Corporation, GM Technical Center, Warren, Michigan
L. R. Strang, Caterpillar Tractor Company, E. Peoria, Illinois

Copyright ASME International
Provided by IHS under license with ASME
No reproduction or networking permitted without license from IHS
Not for Resale

SOCIETY OF MANUFACTURING ENGINEERS
M. Davidson, Thredco Company, Troy, Michigan
J. S. Urso, Sepulveda, California
Dale Story, The Bendix Corporation, South Beloit, Illinois

SOCKET SCREW PRODUCTS BUREAU
E. J. Heldmann, The Holo-Krome Screw Corporation, Hartford, Connecticut

TELEPHONE GROUP, THE
R. H. Van Horn, Bell Telephone Laboratories, Inc., Columbus, Ohio
F. P. Balacek, Alternate, Bell Telephone Laboratories, Inc., Columbus, Ohio
L. L. Parrish, Alternate, Western Electric Company, Inc., Chicago, Illinois

U.S. MACHINE, CAP, WOOD & TAPPING SCREW BUREAU
R. M. Byrne, U.S. Screw Service Bureaus, New York, New York
E. F. Tauscher, Alternate, Pheoll Manufacturing Company, Chicago, Illinois

U.S. DEPARTMENT OF THE ARMY
Irwin Rosen, USA Mobility Equipment Company, Fort Belvoir, Virginia
M. L. Fruechtenicht, Alternate, Redstone Arsenal, Alabama
John McAdams, Alternate, U.S. Army Materiel Command, Alexandria, Virginia

Watervliet Arsenal
J. J. Fiscella, Watervliet, New York

U.S. DEPARTMENT OF COMMERCE
National Bureau of Standards
A. G. Strang, National Bureau of Standards, Optical Physics Division, Washington, D.C.

U.S. DEPARTMENT OF THE NAVY
Naval Ship Engineering Center (NSSC)
J. Kelly, Naval Ship Systems Command, Washington, D.C.

U.S. DEPARTMENT OF THE AIR FORCE
Edward Sosnowski, Aeronautical Systems Division, Wright-Patterson Air Force Base, Dayton, Ohio
F. Hannon, Alternate, Aeronautical Systems Division, Wright-Patterson Air Force Base, Dayton, Ohio
R. B. Norwood, Robbins Air Force Base, Georgia

VALLEY BOLT COMPANY
C. O. Franklin, Marion, Iowa

VAN KEUREN COMPANY
R. W. Lamport, The Van Keuren Company, Watertown, Massachusetts

INDIVIDUAL MEMBERS
S. C. Adamek, (observer), Pheoll Manufacturing Company, Chicago, Illinois
C. T. Appleton, Jefferson, Massachusetts
W. E. Bour, Santa Monica, California
W. S. Brown, Roanoke, Virginia
J. F. Cramer, Des Moines, Washington
R. B. Donahue, Xerox Corporation, Rochester, New York
E. W. Drescher, Bulova Watch Company, Inc., Flushing, New York
I. H. Fullmer (observer), Silver Springs, Maryland
W. E. Hay, The Pipe Machinery Company, Wickliffe, Ohio
A. R. Machell, Jr., Xerox Corporation, Rochester, New York
A. E. Masterson, Watervliet, New York
P. V. Miller (observer), Santa Maria, California
H. G. Muenchinger, Continental Screw Company, New Bedford, Massachusetts
Frank Tisch, Desert Hot Springs, California
R. P. Trowbridge, GM Technical Center, Warren, Michigan
J. E. Watson, Philadelphia, Pennsylvania

Copyright ASME International
Provided by IHS under license with ASME
No reproduction or networking permitted without license from IHS
Not for Resale

PERSONNEL OF SUBCOMMITTEE NO. 20 ON PIPE THREADS

D. N. Badgley, Chairman, Clark Equipment Company, Battle Creek, Michigan
W. E. Bour, Gardena, California
R. J. Browning, Southern Gage Company, Erin, Tennessee
J. A. Casner, Youngstown Steel Company, Youngstown, Ohio
W. O. Clinedinst, Consulting Engineer, Pittsburgh, Pennsylvania
M. Davidson, Southfield, Michigan
H. W. Ellison, General Motors Technical Center, Warren, Michigan
L. S. Feldheim, Secretary, The Weatherhead Company, Cleveland, Ohio
J. O. Heinze, Regal-Beloit Corporation, South Beloit, Illinois
J. S. Hinske, Parker-Hannifin Corporation, Tube Fitting Division, Cleveland, Ohio
D. F. Hubbard, Long Island Lighting Company, Hicksville, New York
S. I. Kanter, The Hanson-Whitney Company, Hartford, Connecticut
W. A. Keaton, Vice Chairman, General Motors Technical Center, Warren, Michigan
W. C. Matlock, Stockham Valves & Fittings, Birmingham, Alabama
R. S. Piotrowski, Mack Trucks, Inc., Allentown, Pennsylvania
P. V. Pastore, Regal-Beloit Corporation, South Beloit, Illinois
W. M. Roll, Deere & Company, Moline, Illinois
M. Rose, Southern Gage Company, Erin, Tennessee
R. J. Ross, Wheeling-Pittsburgh Steel Corporation, Benwood, West Virginia
C. J. Schim, Ford Motor Company, Dearborn, Michigan
J. Shields, Jackes-Evans Manufacturing Company, Jackson, Mississippi
J. Turton, The Bendix Corporation, South Beloit, Illinois
A. G. Strang, National Bureau of Standards, Washington, D.C.

Copyright ASME International
Provided by IHS under license with ASME
No reproduction or networking permitted without license from IHS
Not for Resale

CONTENTS

			Page
Section	1	Product Threads	1
	1.1	Introduction	1
	1.2	Thread Types	2
	1.3	Thread Designations and Notation	3
	1.3.1	NPTF Thread Class	3
	1.3.2	Designation of Plated Threads	3
	1.4	Applications	3
	1.4.1	Type	3
	1.4.1.1	NPTF	3
	1.4.1.2	PTF-SAE SHORT	3
	1.4.1.3	NPSF	4
	1.4.1.4	NPSI	4
	1.4.2	CLASS	4
	1.4.2.1	NPTF CLASS 1	4
	1.4.2.2	NPTF CLASS 2	4
	1.5	Assembly Limitations	4
	1.6	Thread Form and Tolerance	4
	1.7	Basic Dimensions	7
	1.7.1	NPTF Threads	7
	1.7.2	PTF-SAE SHORT, External Threads	8
	1.7.3	PTF-SAE SHORT, Internal Threads	9
	1.7.4	NPSF Threads	10
	1.7.5	NPSI Threads	10
Appendix A		Letter Symbols and Formulas	11
	A.1	Symbols Designating the Dimensions of Pipe Threads	11
	A.2	Formulas for Diameter and Length of Thread	11
Appendix B		Suggested Tap Drill Sizes for Internal Dryseal Pipe Threads	14
Appendix C		Special Short, Special Extra Short, Fine, and Special Diameter-Pitch Combination Dryseal Pipe Threads	15
	C.1	Dryseal Special Short Taper Pipe Thread, PTF-SPL SHORT	15
	C.2	Dryseal Special Extra Short Taper Pipe Thread, PTF-SPL EXTRA SHORT	15
	C.3	Limitations of Assembly	15
	C.4	Dryseal Fine Taper Thread Series, F-PTF	16
	C.5	Dryseal Special Diameter-Pitch Combination Series, SPL-PTF	16
	C.6	Formulas for Diameter and Length of Thread	16
	C.7	Designations	16
Table	1	Recommended Limitations of Assembly Among the Various Types of Dryseal Threads	5
	2	Reference Dimensions for Assembled Engagement of Dryseal Pipe Threads	5
	3	Basic Dimensions for NPTF Threads	7
	4	Basic Dimensions for PTF-SAE SHORT, External Threads	8

Copyright ASME International
Provided by IHS under license with ASME
No reproduction or networking permitted without license from IHS
Not for Resale

			Page
Table	5	Basic Dimensions for PTF-SAE SHORT, Internal Threads	9
	6	Dimensional Data for NPSF Threads	10
	7	Dimensional Data for NPSI Threads	10
	A1	Pipe Thread Symbols	12
	B1	Suggested Tap Drill Sizes for Internal Dryseal Pipe Threads	14
	C1	Basic Dimensions of Dryseal Fine Taper Pipe Thread, F-PTF	18
	C2	Basic Dimensions of Dryseal Special Taper Pipe Thread, SPL-PTF (For Thin Wall Nominal Size OD Tubing)	19
Figure	1	Extreme Mating Conditions for Dryseal Pipe Threads	2
	2	Thread Form and Limits on Root and Crest Tuncation of Product Threads	6
	A1	Application of Pipe Thread Symbols	13
	C1	Comparison of Special Dryseal Threads with Standard Length Dryseal Threads	17

Copyright ASME International
Provided by IHS under license with ASME
No reproduction or networking permitted without license from IHS
Not for Resale

AMERICAN NATIONAL STANDARD

INCH DRYSEAL PIPE THREADS

SECTION I
PRODUCT THREADS

1.1 Introduction

Dryseal pipe threads are based on the USA (American) pipe thread, however, they differ from the USA (American) pipe thread in that they are designed to seal pressuretight joints without the necessity of using sealing compounds. To accomplish this some modification of thread form and greater accuracy in manufacture is required. The roots of both the external and internal threads are truncated slightly more than the crests, i.e. roots have wider flats than crests, so that metal-to-metal contact occurs at the crests and roots coincident with or prior to flank contact, see Figure 1. Thus as the threads are assembled by wrenching, the roots of the threads crush the sharper crests of the mating threads. This sealing action at both the major and minor diameters tends to prevent spiral leakage and makes the joints pressuretight without the necessity of using sealing compounds, provided that the mating threads are in accordance with standard specifications and tolerances and are not damaged by galling in assembly. The control of crest and root truncation is simplified by the use of properly designed threading tools. Also, it is desirable that both external and internal threads have full thread height for the L_1 length. However, where not functionally objectionable, the use of a compatible lubricant or sealant may be used to minimize the possibility of galling. This is desirable in assembling Dryseal pipe threads in refrigeration and other systems to effect a pressuretight seal.[1]

1.1.1 In order to obtain a pressure tight seal using Dryseal pipe threads without a sealer, it is necessary to hold crest and root truncation of both internal and external threads within the limits specified. Unless this is done by use of threading tools with the crest and root truncation controlled so as to assure reproduction on the product threads, it is necessary to use a system of measuring or a system of gaging and measuring to determine conformance.

1.1.2 Even without truncation gages, the standard practice of using two separate thread gages for Dryseal pipe threads, each with a difference in truncation, length of engagement and point of engagement, provides a more detailed check of angle, lead and taper deviations than is required for non-dryseal taper pipe threads.

1.1.3 One method of checking crest truncation is by using 6 step plain gages. It should be recognized that this method may give misleading results in that the crest truncation of the product threads is always less (flat narrower) than that indicated by the position of the gages, the degree of inconsistency depending on the angle, lead and taper deviations present in the product thread.

1.1.4 Another method employs both crest and root truncation check gages. The root check gage is made with a thread form having an included angle of 50 degrees and with a smaller gage crest flat than the root flat to be checked. The major diameter of this gage is controlled in relation to 6 gaging steps in a similar manner to the plain 6 step crest check gage. Like the crest check gage, the results may be somewhat misleading except that in the case of the root check gage, the root truncation of the product thread is always more (flat wider) than is indicated by the position of the gages.

1.1.5 Unless lead, angle and taper of product threads are very well controlled, use of 6 step crest and root check gages will result in product threads with narrower crest flats and wider root flats than envisioned by the dryseal tolerances. Use of such a gaging system could result in rejection of threads which would actually conform to the dryseal tolerances specified. The only completely reliable referee method for determining whether crest and root truncation has been

[1] The refrigeration industry has generally accepted the use of a sealant to obtain an absolute pressuretight joint, when assembling taper pipe threads.

Copyright ASME International
Provided by IHS under license with ASME
No reproduction or networking permitted without license from IHS
Not for Resale

held within tolerance is direct measurement of the external thread flats and measurement of these flats on a cast or section of the internal thread.

1.1.6 This standard covers two classes of NPTF Dryseal pipe threads; Class 1 and Class 2. The classes differ only in inspection requirements, with Class 1 threads exactly those standardized in ANSI B2.2-1968 (inspection of root and crest truncation not specified). Class 2 threads are identical to Class 1 threads except that inspection of root and crest truncation is required. For Class 2 threads, direct measurement of crest and root truncation is the referee method. These classes do not apply to other than NPTF Dryseal pipe threads.

1.1.7 All dimensions in this standard including all tables are in inches unless otherwise noted.

1.2 Thread Types

External Dryseal pipe threads are tapered only. Internal Dryseal pipe threads may be either straight or tapered, as specified. Also, thread lengths may be either "standard" or "short," depending on the requirements of the application. The short external thread is obtained by shortening the standard thread by one pitch at the small end. A short internal taper thread is obtained by shortening the standard thread by one pitch at the large end. Accordingly, there are four standard types of Dryseal pipe threads, as follows:

Type 1 — Dryseal USA (American) Standard Taper Pipe Thread, NPTF
Type 2 — Dryseal SAE Short Taper Pipe Thread, PTE-SAE SHORT
Type 3 — Dryseal USA (American) Standard Fuel Internal Straight Pipe Thread, NPSF
Type 4 — Dryseal USA (American) Standard Intermediate Internal Straight Pipe Thread, NPSI

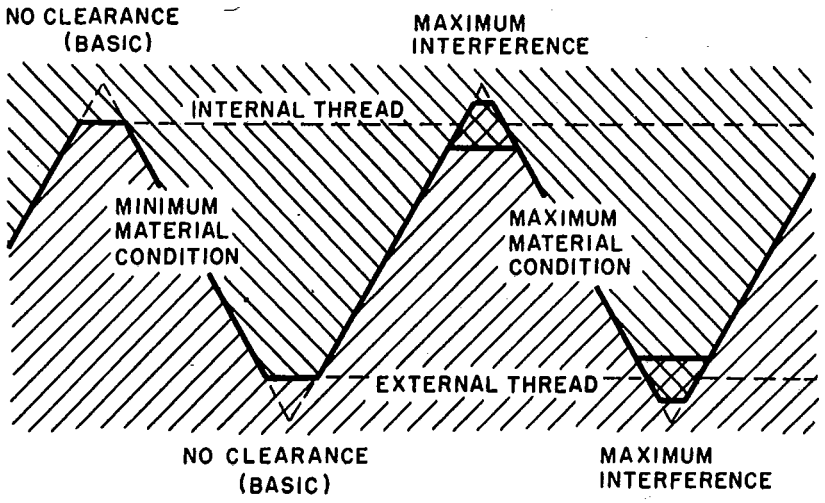

The minimum material condition as shown at the left is established by having the mating crests and roots of equal truncation so as to assure metal to metal contact at these points coincident with flank contact. This condition is established at the sharpest root and the flattest crest and gives no clearance.

Tolerances at the crests and roots are established in the direction of interference only, therefore the maximum material condition shown at the right is established by having the extreme combination of sharpest crests and flattest roots, which provide the maximum interference.

NOTE: When threaded joints are made up wrenchtight, it is intended that the flanks and the crests and roots shall be in contact.

FIG 1 EXTREME MATING CONDITIONS FOR DRYSEAL PIPE THREADS

Copyright ASME International
Provided by IHS under license with ASME
No reproduction or networking permitted without license from IHS
Not for Resale

1.3 Thread Designations and Notation

The above types of Dryseal pipe threads are designated by specifying in sequence the nominal size designations, thread series symbol, and class, as follows:

1/8-27 NPTF-1
1/8-27 NPTF-2
1/8-27 PTF-SAE SHORT
1/8-27 NPSF
1/8-27 NPSI

Each of the letters in the symbols has a definite significance as follows:

N = National (American) Standard
P = Pipe
T = Taper
S = Straight
F = Fuel and Oil
I = Intermediate

1.3.1 NPTF Thread Class. Two classes of NPTF threads have been established: Class 1 and Class 2. Class 1 signifies that specific inspection of root and crest truncation is not required, while class 2 signifies that such is required.

Since class notation is introduced in this standard there will undoubtedly be a long period of time before users completely adopt the new classification. In cases where class is not denoted, the thread shall be considered Class 1.

1.3.2 Designation of Plated Threads. The product specifications of this standard do not include an allowance for plating. If plating is desired, it may be necessary to modify the threads since the same final gaging requirements must be satisfied for plated and unplated parts. This may be emphasized by adding the words AFTER PLATING to the designation. For manufacturing purposes, notes for plated taper pipe threads may specify the gage limits (turns engagement) before plating followed by the words "BEFORE PLATING." These should be followed by the standard gage limits (turns engagement) after plating and the words "AFTER PLATING." Examples of optional designations for an external thread having 0.0002 inch plating thickness are:

3/8-18 NPTF-1, or
3/8-18 NPTF-1 AFTER PLATING, or

3/8-18 NPTF-1, L_1 RING GAGE LIMITS
2¾ to 4¼ turns engagement before plating
2¼ to 4¼ turns engagement after plating

3/8-18 NPTF-1, L_2 RING GAGE LIMITS
2¼ to 3¼ turns beyond actual L_1 gage turns engagement before and after plating.

Example of optional designations for internal thread with 0.0002 inch plating thickness is:

3/8-18 NPTF-1, or
3/8-18 NPTF-1 AFTER PLATING, or

3/8-18 NPTF-1, L_1 PLUG GAGE LIMITS
3 to 4¾ turns engagement before plating
2¾ to 4¾ turns engagement after plating

3/8-18 NPTF-1, L_3 PLUG GAGE LIMITS
2¼ to 3¼ turns beyond actual L_1 gage turns engagement before and after plating.

1.4 Applications

1.4.1 Type

1.4.1.1 NPTF. This type applies to both external and internal threads and is suitable for pipe joints in practically every type of service. Of all Dryseal pipe threads, NPTF external and internal threads mated are generally conceded to be superior for strength and seal since they have the longest length of thread and theoretically, interference (sealing) occurs at every engaged thread root and crest. Use of tapered internal threads, such as NPTF or PTF-SAE SHORT in hard or brittle materials having thin sections will minimize the possibility of fracture.

1.4.1.2 PTF-SAE Short. External threads of this type conform in all respects with NPTF threads, except that the thread length has been shortened by eliminating one thread from the small (entering) end. These threads are designed for applications where clearance is not sufficient for the full thread length of NPTF threads or for economy of material, where the full thread length is not necessary. PTF-SAE SHORT external threads are intended for assembly with NPSI threads, but may also be assembled with NPTF internal threads. They are not designed for and at extreme tolerance limits may not assemble with PTF-SAE SHORT internal or NPSF threads.

Internal threads of this type conform in all respects with NPTF threads, except that the thread length has been shortened by eliminating one thread from the large (entry) end. These threads are designed for thin materials where thickness is not sufficient for the full thread length of NPTF threads or for economy in tapping where the full thread length is not necessary. PTF-SAE SHORT internal threads are primarily intended for assembly with NPTF external threads. They are not designed for and at the extreme tolerance limits may not assemble with PTF-SAE SHORT external threads.

Pressure-tight joints without the use of lubricant or sealer can best be assured where mating components are both threaded with NPTF threads. This

Copyright ASME International
Provided by IHS under license with ASME
No reproduction or networking permitted without license from IHS

Not for Resale

should be considered before specifying PTF-SAE SHORT external or internal threads.

1.4.1.3 NPSF. Threads of this type are straight (cylindrical) instead of tapered and internal only. They are more economical to produce than tapered internal threads, but when assembled do not offer as strong a guarantee of sealing since root and crest interference will not occur for all threads. NPSF threads are generally used with soft or ductile materials which will tend to adjust at assembly to the taper of external threads, but may be used in hard or brittle materials where the section is thick. They are primarily intended for assembly with NPTF external threads. (For other applications see Appendix C.)

1.4.1.4 NPSI. Threads of this type are straight (cylindrical) instead of tapered, internal only, and are slightly larger in diameter than NPSF threads but have the same tolerance and thread length. They are more economical to produce than tapered threads and may be used in hard or brittle materials where the section is thick or where there is little expansion at assembly with external taper threads. As with NPSF threads, NPSI threads when assembled do not offer as strong a guarantee of sealing as do tapered internal threads. NPSI threads are primarily intended for assembly with PTF-SAE SHORT external threads, but can be used with NPTF external threads.

1.4.2 Class

1.4.2.1 NPTF Class 1. Threads made to this class are designed to interfere (seal) at root and crest when mated, but inspection of crest and root truncation for acceptance is not required. Consequently, Class 1 threads are intended for applications where close control of tooling is required for conformance of truncation or where sealing is accomplished by means of a sealant applied to the threads.

1.4.2.2 NPTF Class 2. Threads made to this class are theoretically identical to those made to Class 1, however, inspection of root and crest truncation is required. Consequently, where a sealant is not used, there is more assurance of a pressure-tight seal for Class 2 threads than for Class 1 threads.

1.5 Assembly Limitations

1.5.1 As described in par. 1.2, there are four types of standard Dryseal pipe threads. Types 1 and 2 are tapered and can be made as both external and internal threads. Types 3 and 4 are straight threads and are made only as internal threads. When selecting the combination of external and internal threads to be mated, Table 1 should be used as a guideline. Approximate values for length of engagement for various assemblies are given in Table 2.

1.5.2 Another important factor to consider in the design and manufacture of Dryseal pipe threads is the effect of out-of-roundness which is possible between the wrench-tight mated parts in final assembly. This will vary depending on the method for producing the thread in conjunction with the elasticity and/or ductility of the mating parts and the resultant conformance at final assembly.

1.6 Thread Form and Tolerance

Dryseal pipe threads are triangular with truncated roots and crests. The angle between the flanks of the thread is 60 degrees when measured on an axial plane and the line bisecting this angle is perpendicular to the axis of both the taper and straight threads making each half angle equal to 30 degrees. Thread form and limits on crest and root truncation are given in Figure 2. Although the crests and roots of the Dryseal threads are theoretically flat, they may be rounded providing their contour is within the limits shown in Figure 2. They are truncated parallel to the pitch line on both product and gage threads.

There is no specified tolerance on product pitch diameter, except for internal straight pipe threads. Basic size of the product thread is defined using the basic dimensions covered in paragraph 1.7 and deviations from basic size not defined by a specific tolerance are defined entirely by the gages used for acceptance. In particular, the maximum deviation of functional size from basic is plus and minus 1 turn for NPTF, plus 0 minus 1½ turns for PTF-SAE SHORT, plus 0 minus 1½ turns for NPSF and plus 1 minus ½ turns for NPSI of the L_1 gage. In addition, the L_2 or L_3 gage must correlate within plus and minus ½ turns of the actual L_1 gage position on each specific taper threaded part.

Diametral taper of tapered threads is 0.0625 ± 0.0050 inch per inch of length.

Copyright ASME International
Provided by IHS under license with ASME
No reproduction or networking permitted without license from IHS
Not for Resale

Table 1 Recommended Limitation of Assembly among the Various Types of Dryseal Threads[1]

External Dryseal thread:			For Assembly with Internal Dryseal thread:		
Type	Table	Description	Type	Table	Description
1	4	NPTF (tapered), ext thd	1	4	NPTF (tapered), int thd
			2[2,4]	6	PTF-SAE SHORT (tapered), int thd
			3[2,5]	7	NPSF (straight), int thd
			4[2,5,6]	8	NPSI (straight), int thd
2[2,3]	5	PTF-SAE SHORT (tapered) ext thd	4	8	NPSI (straight), int thd
			1	4	NPTF (tapered), int thd

[1] An assembly with straight internal pipe threads and taper external pipe threads is frequently more advantageous than an all taper thread assembly, particularly in automotive and other allied industries where economy and rapid production are major considerations. Dryseal threads are not used in assemblies in which both components have straight pipe threads.

[2] Pressuretight joints without the use of a sealant can best be assured where both components are threaded with NPTF (full length threads), since theoretically interference (sealing) occurs at all threads, but there are two less threads engaged than for NPTF assemblies. When straight internal threads are used, there is interference only at one thread depending on ductility of materials.

[3] PTF-SAE SHORT external threads are primarily intended for assembly with type 4-NPSI internal threads but can also be used with type 1-NPTF internal threads. They are not designed for, and at extreme tolerance limits may not assemble with, type 2-PTF-SAE SHORT internal threads or type 3-NPSF internal threads.

[4] PTF-SAE SHORT internal threads are primarily intended for assembly with type 1-NPTF external threads. They are not designed for, and at extreme tolerance limits may not assemble with, type 2-PTF-SAE SHORT external threads.

[5] There is no external straight Dryseal thread.

[6] NPSI internal threads are primarily intended for assembly with type 2-PTF-SAE SHORT external threads but will also assemble with full length type 1 NPTF external threads.

Table 2 Reference Dimensions for Assembled Engagement of Dryseal Pipe Threads

Size	Approximate Length of Thread Engagement NPTF External Thread Assembled Into				Approximate Length of Thread Engagement PTF-SAE SHORT External Thread Assembled Into			
	NPSI Internal Thread,	NPTF Internal Thread,	NPSF Internal Thread,	PTF-SAE SHORT Internal Thread,	NPSI Internal Thread,	NPTF Internal Thread,	NPSF Internal Thread,	PTF-SAE SHORT Internal Thread,
	$L_1 + 3p$	$L_1 + 2.5p$	$L_1 + 2p$	$L_1 + 1.5p$	$L_1 + 2p$	$L_1 + 1.5p$	$L_1 + 1p$	$L_1 + 0.5p$
1	2	3	4	5	6	7	8	9
1/16 – 27	0.27	0.25	0.23	0.22	0.23	0.22	0.20	0.18
1/8 – 27	0.27	0.25	0.23	0.22	0.23	0.22	0.20	0.18
1/4 – 18	0.39	0.37	0.34	0.31	0.34	0.31	0.28	0.26
3/8 – 18	0.41	0.38	0.35	0.32	0.35	0.32	0.29	0.27
1/2 – 14	053	0.50	0.46	0.43	0.46	0.43	0.39	0.36
3/4 – 14	0.55	0.52	0.48	0.45	0.48	0.45	0.41	0.37
1 – 11½	0.66	0.62	0.57	0.53	0.57	0.53	0.49	0.44
1¼ – 11½	0.68	0.64	0.59	0.55	0.59	0.55	0.51	0.46
1½ – 11½	0.68	0.64	0.59	0.55	0.59	0.55	0.51	0.46
2 – 11½	0.70	0.65	0.61	0.57	0.61	0.57	0.52	0.48
2½ – 8	1.06	0.99	0.93	0.87	0.93	0.87	0.81	0.74
3 – 8	1.14	1.08	1.02	0.95	1.02	0.95	0.89	0.83

Copyright ASME International
Provided by IHS under license with ASME
No reproduction or networking permitted without license from IHS

Not for Resale

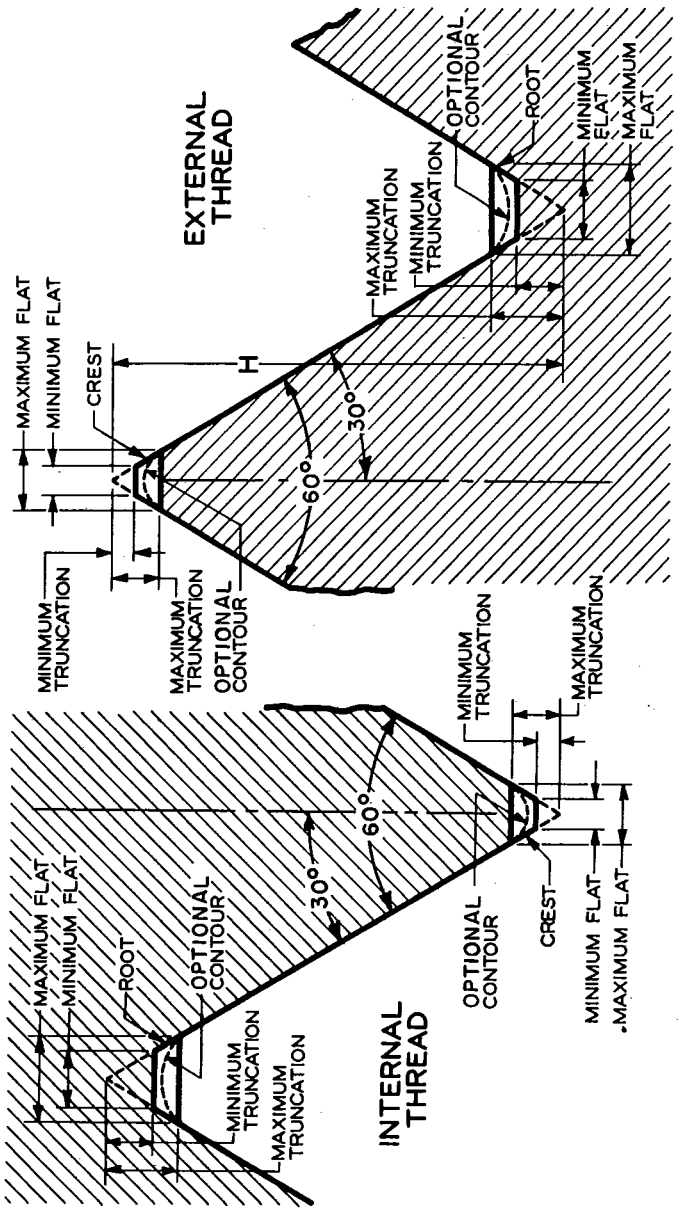

Threads Per Inch	Height of Sharp V Thread (H)	Truncation								Equivalent Width of Flat							
		Minimum				Maximum				Minimum				Maximum			
		At Crest		At Root		At Crest		At Root		At Crest		At Root		At Crest		At Root	
	Formula	Inch	Formula	Inch	Formula	Inch	Formula	Inch	Formula	Inch	Formula	Inch	Formula	Inch	Formula	Inch	
27	0.03208	0.047p	0.0017	0.094p	0.0035	0.094p	0.0035	0.140p	0.0052	0.054p	0.0020	0.108p	0.0040	0.108p	0.0040	0.162p	0.0060
18	0.04811	0.047p	0.0026	0.078p	0.0043	0.078p	0.0043	0.109p	0.0061	0.054p	0.0030	0.090p	0.0050	0.090p	0.0050	0.126p	0.0070
14	0.06180	0.036p	0.0026	0.060p	0.0043	0.060p	0.0043	0.085p	0.0061	0.042p	0.0030	0.070p	0.0050	0.070p	0.0050	0.098p	0.0070
11½	0.07531	0.040p	0.0035	0.060p	0.0052	0.060p	0.0052	0.090p	0.0078	0.046p	0.0040	0.069p	0.0060	0.069p	0.0060	0.103p	0.0090
8	0.10825	0.042p	0.0052	0.055p	0.0069	0.055p	0.0069	0.076p	0.0095	0.048p	0.0060	0.064p	0.0080	0.064p	0.0080	0.088p	0.0110

FIG 2 THREAD FORM AND LIMITS ON ROOT AND CREST TRUNCATION OF PRODUCT THREADS

Copyright ASME International
Provided by IHS under license with ASME
No reproduction or networking permitted without license from IHS

Not for Resale

Copyright ASME International
Provided by IHS under license with ASME
No reproduction or networking permitted without license from IHS

1.7 Basic Dimensions

1.7.1 NPTF Threads

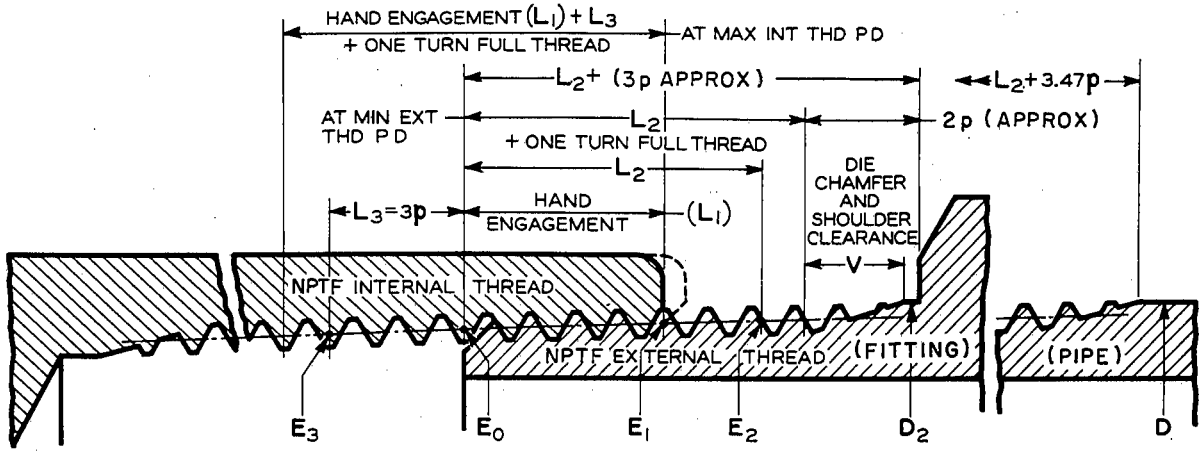

Table 3 Basic Dimensions for NPTF Threads

Size	Pitch (p)	PD at Small End of Ext. Thread (E_0)	PD at Large End of Int Thread (E_1)	PD at Large End of Ext Thread (E_2)	PD at Small End of Int Thread (E_3)	Hand Engagement (L_1)		Length of Full Thread (L_2)[a]		Vanish Thds V Plus Full Thd Tol Plus Shoulder Clearance (V + 1p + ½p)		Shoulder Length [L_2 + (3p Approx)]	External Thread for Draw ($L_2 - L_1$)		Length of Internal Full Thread ($L_1 + L_3$)[b]		OD of Fitting (D_2)	OD of Pipe (D)
	Inch	Inch	Inch	Inch	Inch	Inch	Thd	Inch	Thd	Inch	Thd	Inch	Inch	Thd	Inch	Thd	Inch	Inch
1/16 – 27	0.03704	0.27118	0.28118	0.28750	0.2642	0.1600	4.32	0.2611	7.05	0.1139	3.075	0.3750	0.1011	2.73	0.2711	7.32	0.315	0.3125
1/8 – 27	0.03704	0.36351	0.37360	0.38000	0.3566	0.1615	4.36	0.2639	7.12	0.1112	3.072	0.3750	0.1024	2.76	0.2726	7.36	0.407	0.4050
¼ – 18	0.05556	0.47739	0.49163	0.50250	0.4670	0.2278	4.10	0.4018	7.23	0.1607	2.892	0.5625	0.1740	3.13	0.3945	7.10	0.546	0.5400
⅜ – 18	0.05556	0.61201	0.62701	0.63750	0.6016	0.2400	4.32	0.4078	7.34	0.1547	2.791	0.5625	0.1678	3.02	0.4067	7.32	0.681	0.6750
½ – 14	0.07143	0.75843	0.77843	0.79179	0.7451	0.3200	4.48	0.5337	7.47	0.2163	3.028	0.7500	0.2137	2.99	0.5343	7.48	0.850	0.8400
¾ – 14	0.07143	0.96768	0.98887	1.00179	0.9543	0.3390	4.75	0.5457	7.64	0.2043	2.860	0.7500	0.2067	2.89	0.5533	7.75	1.060	1.0500
1 – 11½	0.08696	1.21363	1.23863	1.25630	1.1973	0.4000	4.60	0.6828	7.85	0.2547	2.929	0.9375	0.2828	3.25	0.6609	7.60	1.327	1.3150
1¼ – 11½	0.08696	1.55713	1.58338	1.60130	1.5408	0.4200	4.83	0.7068	8.13	0.2620	3.013	0.9688	0.2868	3.30	0.6809	7.83	1.672	1.6600
1½ – 11½	0.08696	1.79609	1.82234	1.84130	1.7798	0.4200	4.83	0.7235	8.32	0.2765	3.180	1.0000	0.3035	3.49	0.6809	7.83	1.912	1.9000
2 – 11½	0.08696	2.26902	2.29627	2.31630	2.2527	0.4360	5.01	0.7565	8.70	0.2747	3.159	1.0312	0.3205	3.69	0.6969	8.01	2.387	2.3750
2½ – 8	0.12500	2.71953	2.76216	2.79062	2.6961	0.6820	5.46	1.1375	9.10	0.3781	3.025	1.5156	0.4555	3.64	1.0570	8.46	2.893	2.8750
3 – 8	0.12500	3.34062	3.38850	3.41562	3.3172	0.7660	6.13	1.2000	9.60	0.3781	3.025	1.5781	0.4340	3.47	1.1410	9.13	3.518	3.5000

a External thread tabulated full thread lengths include chamfers not exceeding one pitch (thread) length.
b Internal thread tabulated full thread lengths do not include countersink beyond the intersection of the pitch line and the chamfer cone (gaging reference point).

Not for Resale

1.7.2 PTF-SAE SHORT, External Threads

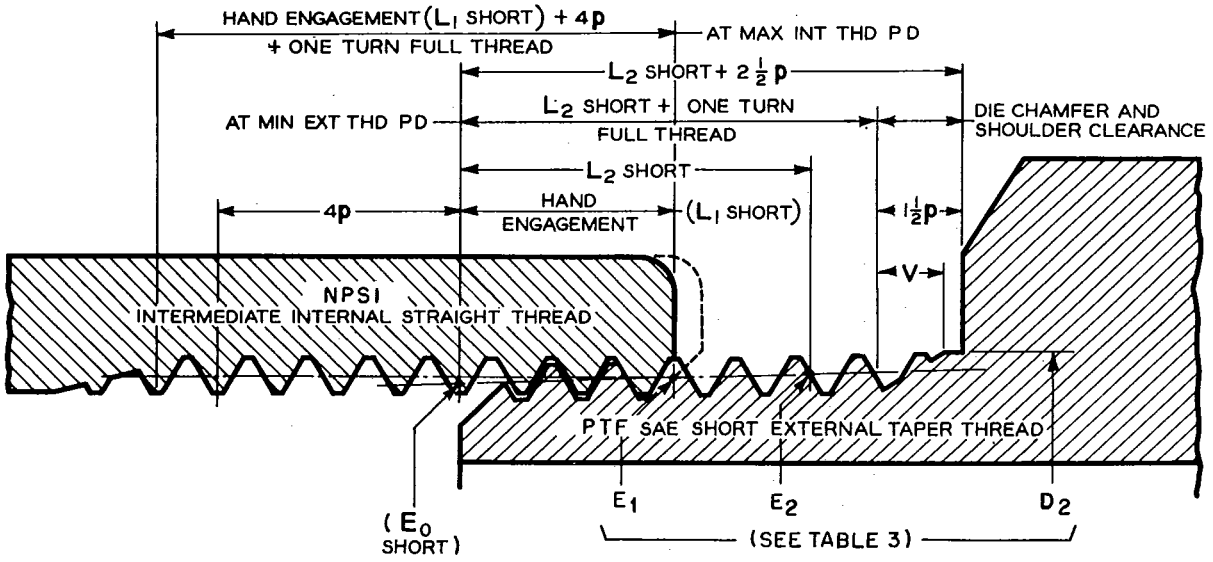

Table 4 Basic Dimensions for PTF-SAE Short, External Threads

Size	Pitch (p)	PD at End of Ext Thread (E_0 Short)	(L_1)		Hand Engagement (L_1 Short)		Length of Full Thread (L_2 Short)[a]		Vanish Thds V Plus Full Thd Tol Plus Shoulder Clearance (V + 1p + ½p)		Minimum Shoulder Length (L_2 Short + 2½p)	External Thread for Draw (L_2 Short – L_1 Short)		Length of Internal Full Thread (L_1 Short + 4p)[b]	
	Inch	Inch	Inch	Thd	Inch	Thd	Inch	Thd	Inch	Thd	Inch	Inch	Thd	Inch	Thd
1/16 – 27	0.03704	0.27349	0.1600	4.32	0.1230	3.32	0.2241	6.05	0.0926	2.50	0.3167	0.1011	2.73	0.2711	7.32
1/8 – 27	0.03704	0.36582	0.1615	4.36	0.1244	3.36	0.2268	6.12	0.0926	2.50	0.3194	0.1024	2.76	0.2726	7.36
¼ – 18	0.05556	0.48086	0.2278	4.10	0.1722	3.10	0.3462	6.23	0.1389	2.50	0.4851	0.1740	3.13	0.3945	7.10
⅜ – 18	0.05556	0.61548	0.2400	4.32	0.1844	3.32	0.3522	6.34	0.1389	2.50	0.4911	0.1678	3.02	0.4067	7.32
½ – 14	0.07143	0.76289	0.3200	4.48	0.2486	3.48	0.4623	6.47	0.1786	2.50	0.6409	0.2137	2.99	0.5343	7.48
¾ – 14	0.07143	0.97214	0.3390	4.75	0.2676	3.75	0.4743	6.64	0.1786	2.50	0.6528	0.2067	2.89	0.5533	7.75
1 – 11½	0.08696	1.21906	0.4000	4.60	0.3130	3.60	0.5958	6.85	0.2174	2.50	0.8132	0.2828	3.25	0.6609	7.60
1¼ – 11½	0.08696	1.56256	0.4200	4.83	0.3330	3.83	0.6198	7.13	0.2174	2.50	0.8372	0.2868	3.30	0.6809	7.83
1½ – 11½	0.08696	1.80152	0.4200	4.83	0.3330	3.83	0.6365	7.32	0.2174	2.50	0.8539	0.3035	3.49	0.6809	7.83
2 – 11½	0.08696	2.27445	0.4360	5.01	0.3490	4.01	0.6695	7.70	0.2174	2.50	0.8869	0.3205	3.69	0.6969	8.01
2½ – 8	0.12500	2.72734	0.6820	5.46	0.5570	4.46	1.0125	8.10	0.3125	2.50	1.3250	0.4555	3.64	1.0570	8.46
3 – 8	0.12500	3.34844	0.7660	6.13	0.6410	5.13	1.0750	8.60	0.3125	2.50	1.3875	0.4340	3.47	1.1410	9.13

a External thread tabulated full thread lengths include chamfers not exceeding one pitch (thread) length.

b Internal thread tabulated full thread lengths do not include countersink beyond the intersection of the pitch line and the chamfer cone (gaging reference point).

Copyright ASME International
Provided by IHS under license with ASME
No reproduction or networking permitted without license from IHS
Not for Resale

1.7.3 PTF-SAE SHORT, Internal Threads

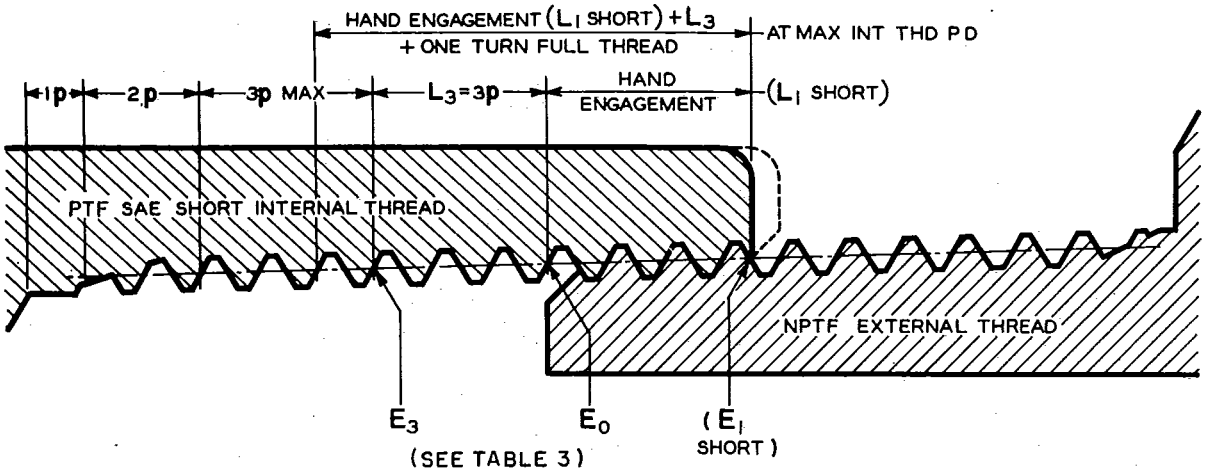

Table 5 Basic Dimensions for PTF-SAE Short, Internal Threads

Size	Pitch (p)	PD at End of Int Thread (E_1 Short)	(L_1)		Hand Engagement (L_1 Short)		Length of Internal Full Thread (L_1 Short + L_3)[a]		Hole Depth For SAE Short Tap
	Inch	Inch	Inch	Thd	Inch	Thd	Inch	Thd	Inch
1/16 – 27	0.03704	0.27887	0.1600	4.32	0.1230	3.32	0.2341	6.32	0.4564
1/8 – 27	0.03704	0.37129	0.1615	4.36	0.1244	3.36	0.2356	6.36	0.4578
1/4 – 18	0.05556	0.48815	0.2278	4.10	0.1722	3.10	0.3389	6.10	0.6722
3/8 – 18	0.05556	0.62354	0.2400	4.32	0.1844	3.32	0.3511	6.32	0.6844
1/2 – 14	0.07143	0.77397	0.3200	4.48	0.2486	3.48	0.4629	6.48	0.8915
3/4 – 14	0.07143	0.98441	0.3390	4.75	0.2676	3.75	0.4819	6.75	0.9105
1 – 11½	0.08696	1.23320	0.4000	4.60	0.3130	3.60	0.5739	6.60	1.0956
1¼ – 11½	0.08696	1.57795	0.4200	4.83	0.3330	3.83	0.5939	6.83	1.1156
1½ – 11½	0.08696	1.81691	0.4200	4.83	0.3330	3.83	0.5939	6.83	1.1156
2 – 11½	0.08696	2.29084	0.4360	5.01	0.3490	4.01	0.6099	7.01	1.1316
2½ – 8	0.12500	2.75435	0.6820	5.46	0.5570	4.46	0.9320	7.46	1.6820
3 – 8	0.12500	3.38069	0.7660	6.13	0.6410	5.13	1.0160	8.13	1.7660

a Internal thread tabulated full thread lengths do not include countersink beyond the intersection of the pitch line and the chamfer cone (gaging reference point).

Copyright ASME International
Provided by IHS under license with ASME
No reproduction or networking permitted without license from IHS

Not for Resale

1.7.4 NPSF Threads

Table 6 Dimensional Data for NPSF Threads

Size	Pitch Diameter[a]		Minor Diameter[b]	Desired Minimum Full Thread Length[c]	
	Min[d]	Max[e]	Min	Inch	Thd
1/16 – 27	0.2768	0.2803	0.2482	0.31	8.44
1/8 – 27	0.3692	0.3727	0.3406	0.31	8.44
1/4 – 18	0.4852	0.4904	0.4422	0.47	8.44
3/8 – 18	0.6205	0.6257	0.5776	0.50	9.00
1/2 – 14	0.7700	0.7767	0.7133	0.66	9.19
3/4 – 14	0.9805	0.9872	0.9238	0.66	9.19
1 – 11½	1.2284	1.2365	1.1600	0.78	8.98

a The pitch diameter of the tapped hole as indicated by the taper plug gage is slightly larger than the values given due to the gage having to enter approximately 3/8 turn to engage first full thread.
b As the Dryseal American Standard pipe thread form is maintained, the major and minor diameters of the internal thread vary with the pitch diameter.
c Internal thread tabulated full thread lengths do not include countersink beyond the intersection of the pitch line and the chamfer cone (gaging reference point).
d Minimum pitch diameter is the maximum pitch diameter reduced by 1½ turns.
e Maximum pitch diameter is the same as the E_1 pitch diameter at large end of internal thread (Table 3) minus (small) 3/8 thread taper.

1.7.5 NPSI Threads

Table 7 Dimensional Data for NPSI Threads

Size	Pitch Diameter[a]		Minor Diameter[b]	Desired Minimum Full Thread Length[c]	
	Min[d]	Max[e]	Min	Inch	Thd
1/16 – 27	0.2791	0.2826	0.2505	0.31	8.44
1/8 – 27	0.3715	0.3750	0.3429	0.31	8.44
1/4 – 18	0.4886	0.4938	0.4457	0.47	8.44
3/8 – 18	0.6240	0.6292	0.5811	0.50	9.00
1/2 – 14	0.7745	0.7812	0.7180	0.66	9.19
3/4 – 14	0.9850	0.9917	0.9283	0.66	9.19
1 – 11½	1.2338	1.2420	1.1655	0.78	8.98

Footnotes a, b, c and d as shown under Table 6 apply also to Table 7.
e Maximum pitch diameter is the same as the E_1 pitch diameter at large end of internal thread (Table 3) plus (large) 5/8 thread taper.

Copyright ASME International
Provided by IHS under license with ASME
No reproduction or networking permitted without license from IHS

Not for Resale

APPENDIX A

LETTER SYMBOLS AND FORMULAS

A.1 Symbols Designating the Dimensions of Pipe Thread Elements

Standard letter symbols to designate the dimensions of pipe threads are given in Table A1. The application of pipe thread symbols is illustrated in Figure A1.

A.2 Formulas for Diameter and Length of Thread

Basic diameter and length of thread for different sizes given in Tables 3, 4, and 5, are based on the following formulas:

Basic pitch diameter of thread at small end of NPTF external thread.

$$E_0 = D - (0.05D + 1.1)\,p$$

Basic pitch diameter of thread at small end of PTF-SAE Short external thread.

$$E_0 \text{ Short} = D - (0.05D + 1.037)\,p$$

Basic pitch diameter of thread at large end of NPTF internal thread.

$$E_1 = E_0 + (0.0625L_1 \text{ Basic})$$

Basic pitch diameter of thread at large end of PTF-SAE Short internal thread.

$$E_1 \text{ Short} = E_0 \text{ Short} + (0.0625L_1 \text{ Short})$$

Basic length of NPTF external full and effective length thread.

$$L_2 = (0.8D + 6.8)\,p$$

Basic length of PTF-SAE Short external full and effective length thread.

$$L_2 \text{ Short} = (0.8D + 5.8)\,p$$

Basic length of NPTF internal full and effective length thread $= L_1$ Basic $+ L_3$

Basic length of PTF-SAE Short internal full and effective length thread $= L_1$ Short $+ L_3$

where D = outside diameter of pipe
p = pitch of thread

Copyright ASME International
Provided by IHS under license with ASME
No reproduction or networking permitted without license from IHS
Not for Resale

APPENDIX A

Table A1 Pipe-thread Symbols (*See Fig* A1)

SYMBOLS	DIMENSIONS	REMARKS
D	Outside diameter of pipe	
d	Inside diameter of pipe	
t	Wall thickness of pipe	
D_x	Major diameter	Subscript x denotes plane containing the diameter. For axial *positions of planes* see below. Subscripts s, or n designating external and internal threads, respectively, may also be used if necessary.
E_x	Pitch diameter	
K_x	Minor diameter	
L_x	Length of thread from plane of pipe end to plane containing basic diameter D_x, E_x, or K_x.	For axial position of plane containing *basic diameter*, see below.
V	Length of vanish cone (washout) threads.	
β (beta)	Half apex angle of pitch cone of taper thread.	
γ (gamma)	Angle of chamfer at end of pipe measured from a plane normal to the axis.	
A	Handtight standoff of face of coupling from plane containing vanish point on pipe.	
M	Length from plane of handtight engagement to the face of coupling on internally threaded member.	
S	Distance of gaging step of plug gage from face of ring gage for handtight engagement. Standoff.	
L_n	Length from center line of coupling, face of flange, or bottom of internal thread chamber to face of fitting.	
b	Width of bearing face on coupling.	
τ (tau)	Angle of chamfer at bottom of recess or counterbore measured from the axis.	
ϵ (epsilon)	Half apex angle of vanish cone.	
J	Length from center line of coupling, face of flange, or bottom of internal thread chamber to end of pipe wrenched engagement.	
L_t	(1) Length of straight full thread (see Table 1). (2) Length from plane of handtight engagement to small end of full internal taper thread.	
Q	Diameter of recess or counterbore in fitting.	
q	Depth of recess or counterbore in fitting.	
W	Outside diameter of coupling or hub of fitting.	

DEFINITIONS OF PLANES DENOTED BY SUBSCRIPT x

$x = 0$	Plane of pipe end.
$x = 1$	Plane of handtight engagement or plane at mouth of coupling (excluding recess, if present). On British pipe threads this is designated the "gauge plane" and the major diameter in this plane is designated the "gauge diameter."
$x = 2$	Plane at which vanish threads on pipe commence.
$x = 3$	Plane in coupling reached by end of pipe in wrenched condition. (L_3 is measured from plane containing pipe end in position of handtight engagement.)
$x = 4$	Plane containing vanish point of thread on pipe.
$x = 5$	Plane at which major diameter cone of thread intersects outside diameter of pipe.

Note: Additional special subscripts are as follows: Plane $x = 6$ is the plane of the pipe end for railing joints. Plane $x = 7$ is the plane of the API gage point at a specified length from the plane of vanish point. Plane $x = 8$ is the plane of the large end of the "L_8 thread ring gage" for the National Gas Taper (compressed-gas cylinder valve inlet connection) thread. Plane $x = 9$ is the plane of the small end of the "L_9 thread plug gage" for the National Gas Taper (compressed-gas cylinder inlet) thread.

Copyright ASME International
Provided by IHS under license with ASME
No reproduction or networking permitted without license from IHS
Not for Resale

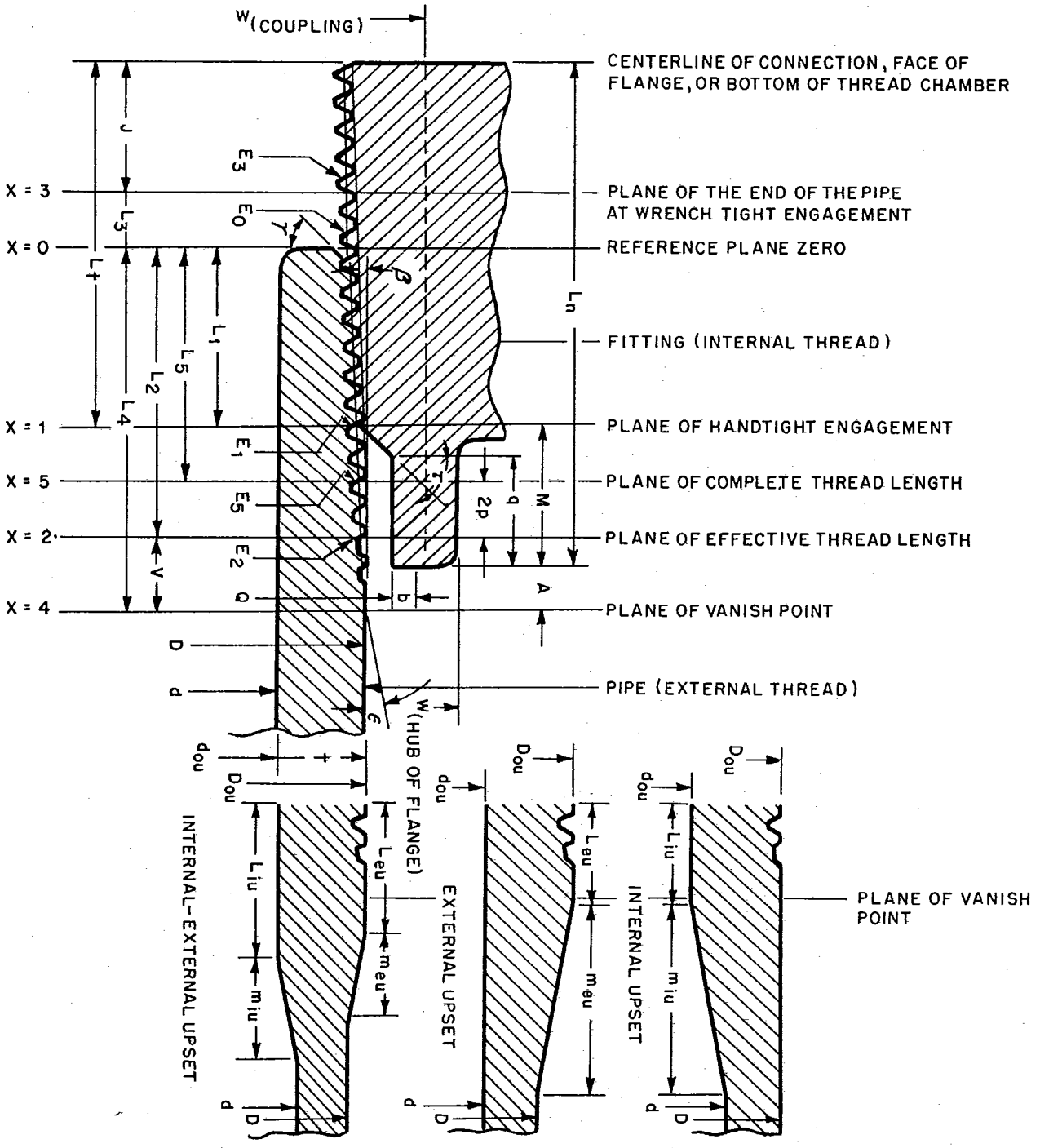

FIG A1 APPLICATION OF PIPE THREAD SYMBOLS
(See Table A1)

Copyright ASME International
Provided by IHS under license with ASME
No reproduction or networking permitted without license from IHS
Not for Resale

APPENDIX B

SUGGESTED TAP DRILL SIZES FOR INTERNAL DRYSEAL PIPE THREADS

The drill diameters given in Table B1 are for taper and straight internal pipe threads and will usually permit the tapping of acceptable threads in free-machining brass or steel provided the drill is correctly sharpened. When hard metals or other similar materials are to be drilled and tapped, it may be necessary to use a drill of slightly larger diameter whereas some soft materials may require a smaller size.

Taper pipe threads of improved quality are obtained when the holes are taper reamed after drilling and before tapping. Standard taper pipe reamers are used and, as in drilling, the actual size of the hole depends upon the material and is best determined by trial.

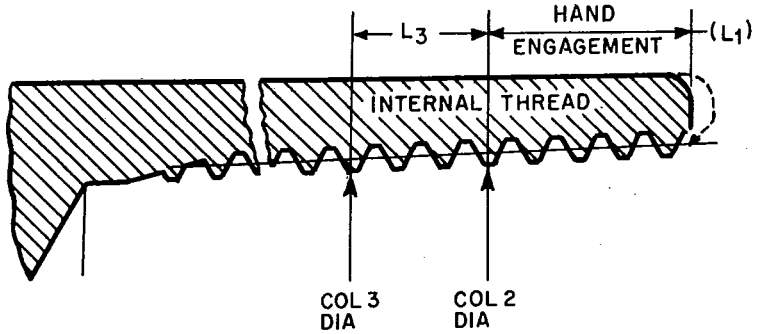

Table B1 Suggested Tap Drill Sizes For Internal Dryseal Pipe Threads

Size	Probable Drill Oversize Cut (Mean)	Taper Pipe thread						Straight Pipe Thread			
		Minor Diameter At Distance		Drill For Use Without Reamer		Drill For Use With Reamer		Minor Diameter		c Theoretical Drill Size	d Suggested Drill Size
		L_1 From Large End	$L_1 + L_3$ From Large End	a Theoretical Drill Size	d Suggested Drill Size	b Theoretical Drill Size	d Suggested Drill Size	NPSF	NPSI		
	1	2	3	4	5	6	7	8	9	10	11
1/16 – 27	0.0038	0.2443	0.2374	0.2405	"C" (0.242)	0.2336	"A" (0.234)	0.2482	0.2505	0.2444	"D" (0.246)
1/8 – 27	0.0044	0.3367	0.3298	0.3323	"Q" (0.332)	0.3254	21/64 (0.328)	0.3406	0.3429	0.3362	"R" (0.339)
1/4 – 18	0.0047	0.4362	0.4258	0.4315	7/16 (0.438)	0.4211	27/64 (0.422)	0.4422	0.4457	0.4375	7/16 (0.438)
3/8 – 18	0.0049	0.5708	0.5604	0.5659	9/16 (0.562)	0.5555	9/16 (0.563)	0.5776	0.5811	0.5727	37/64 (0.578)
1/2 – 14	0.0051	0.7034	0.6901	0.6983	45/64 (0.703)	0.6850	11/16 (0.688)	0.7133	0.7180	0.7082	45/64 (0.703)
3/4 – 14	0.0060	0.9127	0.8993	0.9067	29/32 (0.906)	0.8933	57/64 (0.891)	0.9238	0.9283	0.9178	59/64 (0.922)
1 – 11½	0.0080	1.1470	1.1307	1.1390	1 9/64 (1.141)	1.1227	1 1/8 (1.125)	1.1600	1.1655	1.1520	1 5/32 (1.156)
1¼ – 11½	0.0100	1.4905	1.4742	1.4805	1 31/64 (1.484)	1.4642	1 15/32 (1.469)				
1½ – 11½	0.0120	1.7295	1.7132	1.7175	1 23/32 (1.719)	1.7012	1 45/64 (1.703)				
2 – 11½	0.0160	2.2024	2.1861	2.1864	2 3/16 (2.188)	2.1701	2 11/64 (2.172)				
2½ – 8	0.0180	2.6234	2.6000	2.6054	2 39/64 (2.609)	2.5820	2 37/64 (2.578)				
3 – 8	0.0200	3.2445	3.2211	3.2245	3 15/64 (3.234)	3.2011	3 13/64 (3.203)				

a Column 4 values equal column 2 values minus column 1 values.
b Column 6 values equal column 3 values minus column 1 values.
c Column 10 values equal column 8 values minus column 1 values.
d Some drill sizes listed may not be standard drills, and in some cases, standard metric drill sizes may be closer to the theoretical drill size.

Copyright ASME International
Provided by IHS under license with ASME
No reproduction or networking permitted without license from IHS
Not for Resale

APPENDIX C

SPECIAL SHORT, SPECIAL EXTRA SHORT, FINE, AND SPECIAL DIAMETER-PITCH COMBINATION DRYSEAL PIPE THREADS

The SAE Dryseal pipe thread series are based on thread length. Full thread lengths and clearance for Dryseal Standard and SAE SHORT series are shown in Tables 3, 4, 5, 6, and 7 of the standard, and the differences between them are described in the text under the series headings. These full thread lengths and clearances should be used in design applications wherever possible.

Design limitations, economy of material, permanent installation or other limiting conditions may not permit the use of either of the full thread lengths and shoulder lengths in the preceding tables for the above thread series. To meet these conditions two special thread series have been established as shown in Fig. C1 and the deviations from standard practice are described below.

C.1 Dryseal Special Short Taper Pipe Thread, PTF-SPL SHORT

Threads of this series conform in all respects to the PTF-SAE SHORT threads except that the full thread length has been further shortened by eliminating one thread at the large end of external threads or eliminating one thread at the small end of internal threads. Gaging is the same as for PTF-SAE SHORT except the L_2 ring thread gage for external thread length and taper or the L_3 plug thread gage for internal thread length and taper cannot be used. Tolerance must be altered and coordinated as described in paragraph C.3. The designation of this series thread is as follows:

$\frac{1}{8}$-27 PTF-SPL SHORT

C.2 Dryseal Special Extra Short Taper Pipe Thread, PTF-SPL EXTRA SHORT

Threads of this series conform in all respects to the PTF-SAE SHORT threads except that the full thread length has been further shortened by eliminating two threads at the large end of external threads or eliminating two threads at the small end of internal threads. Gaging is the same as for PTF-SAE SHORT except the L_2 ring thread gage for external thread length and taper or the L_3 plug thread gage for internal thread length and taper cannot be used. Tolerance must be altered and co-ordinated as described in paragraph C.3. The designation of this series thread is as follows:

$\frac{1}{8}$-27 PTF-SPL EXTRA SHORT

C.3 Limitations of Assembly

Standard combinations and applications of the various series Dryseal pipe threads are given in the preceding thread descriptions. However, where special combinations are used, additional considerations as outlined below must be observed. These should be designated with the suffix "SPL" and gaging tolerance should be specified.

PTF SPL SHORT EXTERNAL PTF SPL EXTRA SHORT EXTERNAL	MAY* ASSEMBLE WITH	PTF SAE SHORT INTERNAL NPSF INTERNAL PTF SPL SHORT INTERNAL PTF SPL EXTRA SHORT INTERNAL
PTF SPL SHORT INTERNAL PTF SPL EXTRA SHORT INTERNAL	MAY* ASSEMBLE WITH	PTF SAE SHORT EXTERNAL

*Only when the external thread or the internal thread or both are held closer than the standard tolerance, the external toward the minimum and the internal toward the maximum pitch diameter to provide a minimum of one turn hand engagement. At extreme tolerance limits the shortened full thread lengths reduce hand engagement and threads may not start to assemble.

PTF SPL SHORT EXTERNAL PTF SPL EXTRA SHORT EXTERNAL	MAY** ASSEMBLE WITH	NPTF or NPSI INTERNAL
PTF SPL SHORT INTERNAL PTF SPL EXTRA SHORT INTERNAL	MAY** ASSEMBLE WITH	NPTF EXTERNAL

**Only when the internal thread or the external thread or both are held closer than the standard tolerance, the internal toward the minimum and the external toward the maximum pitch diameter to provide a minimum of two turns for wrench make-up and sealing. At extreme tolerance limits the shortened full thread lengths reduce wrench make-up and threads may not seal.

Copyright ASME International
Provided by IHS under license with ASME
No reproduction or networking permitted without license from IHS
Not for Resale

C.4 Dryseal Fine Taper Thread Series, F-PTF

The need for finer pitches for nominal pipe sizes has brought into use applications of 27 threads per inch to 1/4 and 3/8 pipe sizes. There may be other needs which require finer pitches for larger pipe sizes. It is recommended that the existing threads per inch be applied to next size larger pipe size for a fine thread series such as are shown in Table C1. This series applies to external and internal threads of full length and is suitable for applications where threads finer than NPTF are required.

C.5 Dryseal Special Diameter-Pitch Combination Series, SPL-PTF

Other applications of diameter-pitch combinations have also come into use where taper pipe threads are applied to nominal size thin wall tubing such as are shown in Table C2. This series applies to external and internal threads of full length and is applicable to thin wall nominal outside diameter tubing. The number of threads is uniform at 27 per inch.

C.6 Formulas for Diameter and Length of Thread

Basic diameter and length of thread for sizes of Dryseal Fine Taper Pipe Thread, F-PTF, and Dryseal Special Taper Pipe Thread, SPL-PTF, given in Tables C1 and C2 are based on the following formulas:

D = outside diameter of pipe or tubing
p = pitch of thread
Diametral taper = 0.0625 inch per inch of length

Basic pitch diameter at small end of external thread:

$$E_0 = D - (0.05D + 1.1)\,p$$

Basic pitch diameter at large end of internal thread:

$$E_1 = E_0 + 0.0625\,L_1 = D - 0.0625\,p$$

Basic pitch diameter at large end of external thread:

$$E_2 = E_0 + 0.0625\,L_2 = D - 0.675\,p$$

Basic pitch diameter at small end of internal thread:

$$E_1 = E_0 - 0.0625\,L_3 = D - (0.05\,D + 1.2875)\,p$$

Basic length of thread for hand engagement:

$$L_1 = (0.8\,D + 3.8)\,p$$

Basic length of full and effective thread:

$$L_2 = (0.8\,D + 6.8)\,p$$

Basic length of internal thread from end of hand engagement, E_0, to small end of internal thread, E_3:

$$L_3 = 3p$$

Tolerance shall be equal to plus or minus the taper of one thread on the diameter.

C.7 Designations

The designation for a fine thread series pipe thread should include letter F and omit letter N, for example: ¼-27 F-PTF. The designation for a special thread series pipe thread should include abbreviation SPL, for special and omit letter N. Also, the outside diameter of tubing should be given, for example:

½-27 SPL-PTF, OD 0.500.

Copyright ASME International
Provided by IHS under license with ASME
No reproduction or networking permitted without license from IHS
Not for Resale

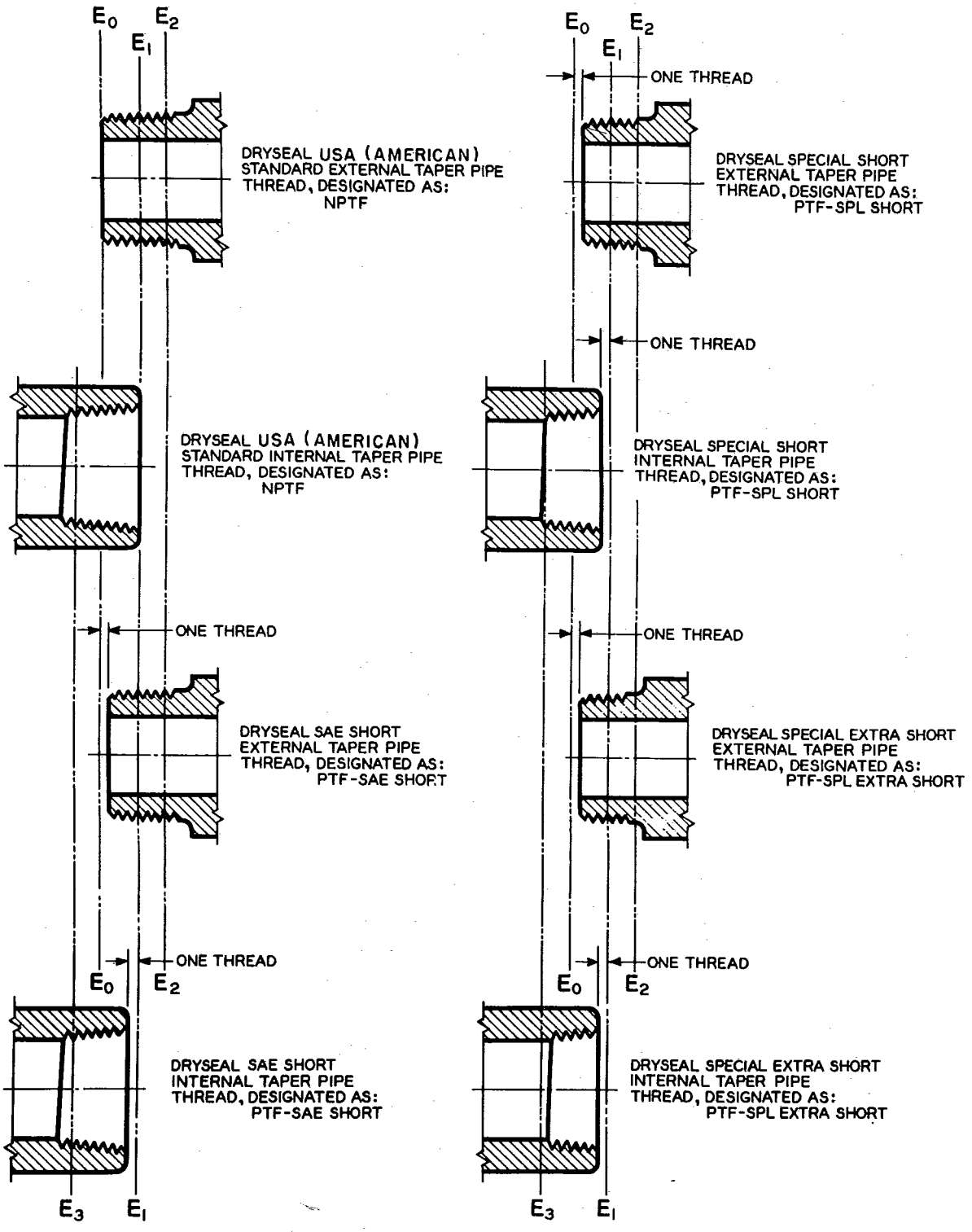

FIG C1 COMPARISON OF SPECIAL LENGTH DRYSEAL THREADS WITH STANDARD LENGTH DRYSEAL THREADS

Copyright ASME International
Provided by IHS under license with ASME
No reproduction or networking permitted without license from IHS
Not for Resale

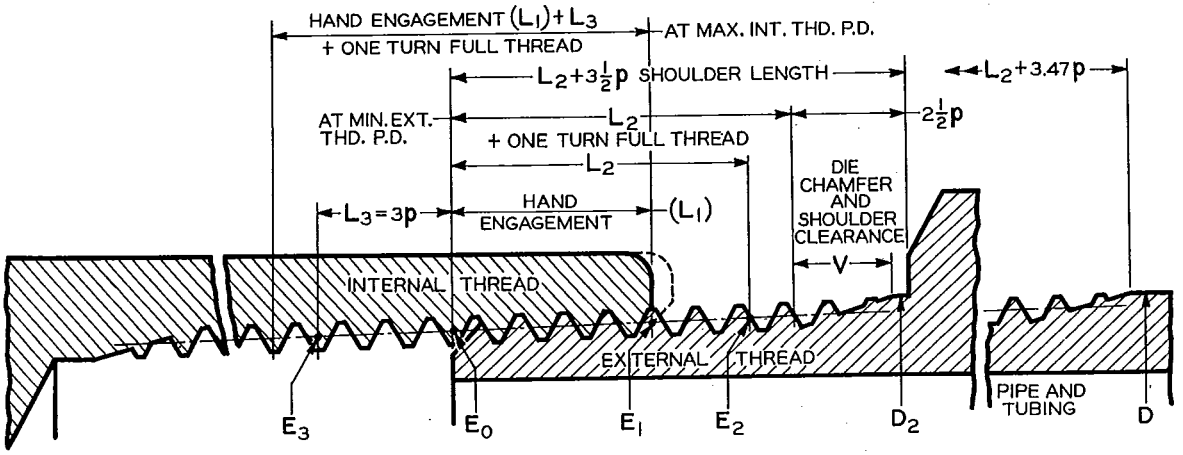

Table C1 Basic Dimensions of Dryseal Fine Taper Pipe Thread, F-PTF

Size	Pitch (p)	PD at Small End of Ext Thread (E_0)	PD at Large End of Int Thread (E_1)	PD at Large End of Ext Thread (E_2)	PD at Small End of Int Thread (E_3)	Hand Engagement (L_1)		Length of Full Thread[a,b] Int ($L_1 + L_3$) & Ext (L_2)		Vanish Thds V Plus Full Thd Tol Plus Shoulder Clearance ($V + 1p + \frac{1}{2}p$)		Shoulder Length ($L_2 + 3\frac{1}{2}p$)	Thread for Draw		Outside Dia of Fitting (D_2)	Outside Dia of Pipe (D)
	Inch	Inch	Inch	Inch	Inch	Inch	Thd	Inch	Thd	Inch	Thd	Inch	Inch	Thd	Inch	Inch
¼ – 27	0.03704	0.49826	0.50807	0.51501	0.49132	0.157	4.23	0.268	7.23	0.1296	3.5	0.3975	0.1111	3.0	0.546	0.540
⅜ – 27	0.03704	0.63301	0.64307	0.65001	0.62607	0.161	4.34	0.272	7.34	0.1296	3.5	0.4015	0.1111	3.0	0.681	0.675
½ – 18	0.05556	0.77655	0.79205	0.80249	0.76613	0.248	4.47	0.415	7.47	0.1944	3.5	0.6096	0.1667	3.0	0.850	0.840
¾ – 18	0.05556	0.98597	1.00210	1.01247	0.97555	0.258	4.64	0.424	7.64	0.1944	3.5	0.6189	0.1667	3.0	1.060	1.050
1 – 14	0.07143	1.23173	1.25342	1.26679	1.21834	0.347	4.85	0.561	7.85	0.2500	3.5	0.8109	0.2143	3.0	1.327	1.315
1¼ – 14	0.07143	1.57550	1.59837	1.61181	1.56211	0.366	5.13	0.581	8.13	0.2500	3.5	0.8306	0.2143	3.0	1.672	1.660
1½ – 14	0.07143	1.81464	1.83839	1.85176	1.80125	0.380	5.32	0.594	8.32	0.2500	3.5	0.8443	0.2143	3.0	1.912	1.900
2 – 14	0.07143	2.28794	2.31338	2.32675	2.27455	0.407	5.70	0.621	8.70	0.2500	3.5	0.8714	0.2143	3.0	2.387	2.375

a External thread tabulated full thread lengths include chamfers not exceeding one pitch (thread) length.
b Internal thread tabulated full thread lengths do not include countersink beyond the intersection of the pitch line and the chamfer cone (gaging reference point).

Copyright ASME International
Provided by IHS under license with ASME
No reproduction or networking permitted without license from IHS
Not for Resale

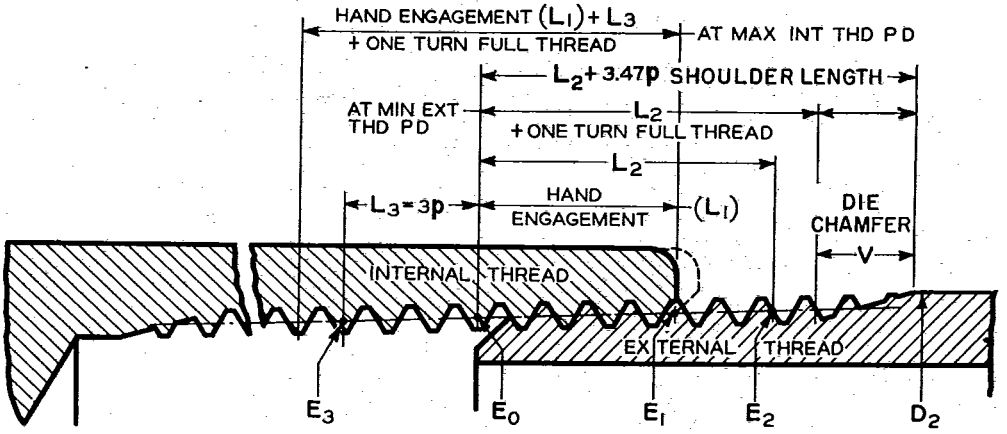

Table C2 Basic Dimensions of Dryseal Special Taper Pipe Thread, SPL-PTF (For Thin Wall Nominal Size OD Tubing)

Tubing Dia (D)[c]	Size	Pitch (p)	PD at Small End of Ext Thread (E_0)	PD at Large End of Int Thread (E_1)	PD at Large End of Ext Thread (E_2)	PD at Small End of Int Thread (E_3)	Hand Engagement (L_1)		Length of Full Thread Int ($L_1 + L_3$)[b] & Ext (L_2)[a]		Thread for Draw	
Inch		Inch	Inch	Inch	Inch	Inch	Inch	Thd	Inch	Thd	Inch	Thd
0.500	1/2–27	0.03704	0.45833	0.46806	0.47500	0.45139	0.1556	4.2	0.2667	7.2	0.1111	3.0
0.625	5/8–27	0.03704	0.58310	0.59306	0.60000	0.57616	0.1593	4.3	0.2704	7.3	0.1111	3.0
0.750	3/4–27	0.03704	0.70787	0.71806	0.72500	0.70093	0.1630	4.4	0.2741	7.4	0.1111	3.0
0.875	7/8–27	0.03704	0.83264	0.84306	0.85000	0.82570	0.1667	4.5	0.2778	7.5	0.1111	3.0
1.000	1–27	0.03704	0.95740	0.96805	0.97500	0.95046	0.1704	4.6	0.2815	7.6	0.1111	3.0

a External thread tabulated full thread lengths include chamfers not exceeding one pitch (thread) length.
b Internal thread tabulated full thread lengths do not include countersink beyond the intersection of the pitch line and the chamfer cone (gaging reference point).
c This denotes nominal outside diameter of tubing and should not be confused with nominal pipe diameter and thread designations.

Copyright ASME International
Provided by IHS under license with ASME
No reproduction or networking permitted without license from IHS
Not for Resale

AMERICAN NATIONAL STANDARDS FOR SCREW THREADS, THREADING TOOLS AND FASTENERS

ISO Metric Screw Threads (not an ANSI Standard) . . . . . B1 Report
Unified Inch Screw Threads (UN and UNR Thread Form) B1.1-1974
Gages and Gaging for Unified Inch Screw Threads B1.2-1974
Acme Screw Threads B1.5-1973
Nomenclature, Definitions and Letter Symbols for Screw Threads B1.7-1965 (R1972)
Stub Acme Screw Threads B1.8-1973
Buttress Inch Screw Threads 7°/45° Form with 0.6 Pitch Basic Height of Thread Engagement . . B1.9-1973
Unified Miniature Screw Threads B1.10-1958
Microscope Objective Thread B1.11-1958 (R1972)
Class 5 Interference-Fit Thread B1.12-1972
American Gaging Practice for Metric Screw Threads B1.16-1972
Hose Coupling Screw Threads B2.4-1966 (R1974)
Taps-Cut and Ground Threads B94.9-1971
Twist Drills B94.11-1967 (R1972)
Small Solid Rivets B18.1.1-1972
Large Rivets B18.1.2-1972
Square and Hex Bolts and Screws B18.2.1-1972
Square and Hex Nuts B18.2.2-1972
Socket Cap, Shoulder and Set Screws B18.3-1969
Round Head Bolts B18.5-1971
Wood Screws B18.6.1-1972
Slotted Head Cap Screws, Square Head Set Screws, and Slotted Headless Set Screws B18.6.2-1972
Machine Screws and Machine Screw Nuts B18.6.3-1972
Slotted and Recessed Head Tapping Screws and Metallic Drive Screws B18.6.4-1966 (R1975)
General Purpose Semi-Tubular Rivets, Full Tubular Rivets and Rivet Caps B18.7-1972
Clevis Pins and Cotter Pins B18.8.1-1972
Plow Bolts B18.9-1958 (R1971)
Track Bolts and Nuts B18.10-1963 (R1975)
Miniature Screws B18.11-1961 (R1975)
Glossary of Terms for Mechanical Fasteners B18.12-1962 (R1975)
Screw and Washer Assemblies–SEMS B18.13-1965 (R1975)
Forged Eyebolts B18.15-1969
Wing Nuts, Thumb Screws and Wing Screws B18.17-1968 (1975)
Lock Washers B18.21.1-1972
Plain Washers B18.22.1-1965 (R1975)
Beveled Washers B18.23.1-1967 (R1975)

N00076

Copyright ASME International
Provided by IHS under license with ASME
No reproduction or networking permitted without license from IHS
Not for Resale