ADOPTION NOTICE

ANSI-B1.20.1, "Pipe Threads, General Purpose (Inch)," was adopted on October 3, 1994 for use by the Department of Defense (DoD). Proposed changes by DoD activities must be submitted to the DoD Adopting Activity: Commanding Officer, Naval Construction Battalion Center, Code 156, 1000 23rd Avenue, Port Hueneme, CA 93043-4301. DoD activities may obtain copies of this standard from the Standardization Document Order Desk, 700 Robbins Avenue, Building 4D, Philadelphia, PA 19111-5094. The private sector and other Government agencies may purchase copies from the American National Standards Institute, 11 West 42nd Street, New York, NY 10036.

Custodians:
Army - ME
Navy - YD-1
DLA - CS

Adopting Activity
Navy - YD-1

AREA THDS

DISTRIBUTION STATEMENT A. Approved for public release; distribution is unlimited.

Copyright ASME International
Provided by IHS under license with ASME
No reproduction or networking permitted without license from IHS
Not for Resale

ASME B1.20.1 83 ■ 2595512 0011841 3 ■

D-90-25

AN AMERICAN NATIONAL STANDARD

PIPE THREADS, GENERAL PURPOSE (INCH)

ANSI/ASME B1.20.1 - 1983

(REVISION AND REDESIGNATION OF ANSI B2.1–1968)

SPONSORED AND PUBLISHED BY

THE AMERICAN SOCIETY OF MECHANICAL ENGINEERS

United Engineering Center 345 East 47th Street New York, N. Y. 10017

Copyright ASME International
Provided by IHS under license with ASME
No reproduction or networking permitted without license from IHS

Not for Resale

Date of Issuance: August 31, 1983

This code or standard was developed under procedures accredited as meeting the criteria for American National Standards. The Consensus Committee that approved the code or standard was balanced to assure that individuals from competent and concerned interests have had an opportunity to participate. The proposed code or standard was made available for public review and comment which provides an opportunity for additional public input from industry, academia, regulatory agencies, and the public-at-large.

ASME does not "approve," "rate," or endorse" any item, construction, proprietary device, or activity.

ASME does not take any position with respect to the validity of any patent rights asserted in connection with any items mentioned in this document, and does not undertake to insure anyone utilizing a standard against liability for infringement of any applicable Letters Patent, nor assume any such liability. Users of a code or standard are expressly advised that determination of the validity of any such patent rights, and the risk of infringement of such rights, is entirely their own responsibility.

Participation by federal agency representative(s) or person(s) affiliated with industry is not to be interpreted as government or industry endorsement of this code or standard.

No part of this document may be reproduced in any form,
in an electronic retrieval system or otherwise,
without the prior written permission of the publisher.

Copyright © 1983 by
THE AMERICAN SOCIETY OF MECHANICAL ENGINEERS
All Rights Reserved
Printed in U.S.A.

Copyright ASME International
Provided by IHS under license with ASME
No reproduction or networking permitted without license from IHS

Not for Resale

FOREWORD

(This Foreword is not part of American National Standard, Pipe Threads, General Purpose (Inch) ANSI/ASME B1.20.1-1983.)

In 1973 American National Standards Committee B2, which had formerly been responsible for pipe thread standards, was absorbed by ANSI Standards Committee B1 and reorganized as subcommittee 20. A complete rewrite of the B2.2-1968 standard on Dryseal Pipe Threads has been completed, with the product thread data in separate documents from the gaging standards for Dryseal Pipe Threads. The system of numbering, to include metric conversions, is as follows:

ANSI B1.20.3-1976 Dryseal Pipe Threads (Inch)
ANSI B1.20.4-1976 Dryseal Pipe Threads (Metric Translation)
ANSI B1.20.5-1978 Gaging for Dryseal Pipe Threads (Inch)
In preparation, B1.20.6M Gaging for Dryseal Pipe Threads (Metric Translation)

A complete rewrite of the B2.1-1968 standard on Pipe Threads (Except Dryseal) was then undertaken. The system of numbering, to include metric conversions, is as follows:

ANSI/ASME B1.20.1 Pipe Threads, General Purpose (Inch)
In preparation, B1.20.2M Pipe Threads, General Purpose (Metric Translation)

These standards, ANSI/ASME B1.20.1 and B1.20.2M, have product thread dimensions and gaging in the same document. Thread inspection specifies the use of L_1 taper thread plug and ring gages similar to B2.1-1968. In addition, emphasis is given to the requirement that all basic thread design dimensions are to be met within the specified tolerances.

The data in this Standard supersede those given in ANSI B2.1-1968.

The ANSI/ASME B1.20.1 was approved by ASME Standards Committee B1 on December 1, 1982 for publication as an official ANSI standard.

The proposed standard was submitted by standards committee B1 to the Secretariat and the American National Standards Institute. It was approved and formally designated as an American National Standard on February 4, 1983.

Copyright ASME International
Provided by IHS under license with ASME
No reproduction or networking permitted without license from IHS
Not for Resale

ASME STANDARDS COMMITTEE B1
Standardization and Unification of Screw Threads

(The following is the roster of the Committee at the time of approval of this Standard.)

OFFICERS

D. J. Emanuelli, *Chairman* **H. W. Ellison,** *Vice Chairman*
C. E. Lynch, *Secretary*

COMMITTEE PERSONNEL

AEROSPACE INDUSTRIES ASSOCIATION OF AMERICA, INC.
- **G. G. Gerber,** McDonnell Douglas, St. Louis, Missouri
- **H. Borrman,** *Alternate,* Sperry Gyroscope Division, Great Neck, New York

AMERICAN IRON AND STEEL INSTITUTE
- **F. Dallas, Jr.,** Sawhill Tubular Division, Sharon, Pennsylvania

AMERICAN MEASURING TOOL MANUFACTURERS ASSOCIATION
- **D. Dodge,** Pennoyer-Dodge Company, Glendale, California
- **C. W. Jatho,** *Alternate,* American Measuring Tool Manufacturers Association, Birmingham, Michigan

AMERICAN PIPE FITTINGS ASSOCIATION
- **W. C. Farrell,** Stockham Valves and Fittings, Birmingham, Alabama

DEFENSE INDUSTRIAL SUPPLY CENTER
- **E. Schwartz,** Defense Industrial Supply Center, Philadelphia, Pennsylvania
- **F. S. Ciccarone,** *Alternate,* Defense Industrial Supply Center, Philadelphia, Pennsylvania

ENGINE MANUFACTURERS ASSOCIATION
- **G. A. Russ,** Cummins Engine Company, Columbus, Indiana

FARM AND INDUSTRIAL EQUIPMENT INSTITUTE
- **J. F. Nagy,** Ford Motor Company, Dearborn, Michigan

INDUSTRIAL FASTENERS INSTITUTE
- **R. B. Belford,** Industrial Fasteners Institute, Cleveland, Ohio
- **R. M. Harris,** Bethlehem Steel Company, Lebanon, Pennsylvania
- **K. E. McCullough,** SPS Technologies, Inc., Jenkintown, Pennsylvania
- **J. C. McMurray,** Russell, Burdsall and Ward Inc., Mentor, Ohio
- **J. A. Trilling,** Holo-Krome Company, West Hartford, Connecticut
- **E. D. Spengler,** *Alternate,* Bethlehem Steel Company, Lebanon, Pennsylvania

MANUFACTURERS STANDARDIZATION SOCIETY OF THE VALVE AND FITTING INDUSTRY
- **W. C. Farrell,** Stockham Valves and Fittings, Birmingham, Alabama

METAL CUTTING TOOL INSTITUTE (TAP & DIE DIVISION)
- **N. F. Nau,** Union/Butterfield, Athol, Massachusetts
- **A. D. Shepherd, Jr.,** *Alternate,* Union/Butterfield, Derby Line, Vermont

Copyright ASME International
Provided by IHS under license with ASME
No reproduction or networking permitted without license from IHS
Not for Resale

NATIONAL AUTOMATIC SPRINKLER AND FIRE CONTROL ASSOCIATION, INC.
- **W. Testa,** Grinnell Fire Protection Systems Company, Inc., Providence, Rhode Island
- **R. P. Fleming,** *Alternate,* National Automatic Sprinkler and Fire Control Association, Inc., Patterson, New York

NATIONAL ELECTRICAL MANUFACTURERS ASSOCIATION
- **J. L. Griffin,** Wheatland Tube Company, Wheatland, Pennsylvania
- **J. B. Levy,** General Electric Company, Schenectady, New York
- **F. F. Weingruber,** Westinghouse Electric Corp., Pittsburgh, Pennsylvania
- **W. R. Williford,** *Alternate,* National Electrical Manufacturers Association, Washington, D.C.

NATIONAL MACHINE TOOL BUILDERS ASSOCIATION
- **R. J. Sabatos,** The Cleveland Twist Drill Company, Cleveland, Ohio
- **D. R. Stoner, Jr.,** Teledyne Landis Machine, Waynesboro, Pennsylvania

NATIONAL SCREW MACHINE PRODUCTS ASSOCIATION
- **T. S. Meyer,** Fischer Special Manufacturing Company, Cold Spring, Kentucky
- **H. A. Eichstaedt,** *Alternate,* National Screw Machine Products Association, Brecksville, Ohio

SOCIETY OF AUTOMOTIVE ENGINEERS
- **H. W. Ellison,** General Motors Technical Center, Warren, Michigan

SOCIETY OF MANUFACTURING ENGINEERS
- **D. Davidson,** Morse/Hemco Corp., Holland, Michigan

TUBULAR RIVET AND MACHINE INSTITUTE
- **R. M. Byrne,** Industry Service Bureaus, Inc., White Plains, New York

UNITED STATES DEPARTMENT OF THE AIR FORCE
- **R. P. Stewart,** Wright-Patterson AFB, Dayton, Ohio

UNITED STATES DEPARTMENT OF THE ARMY
- **J. Crowley,** U.S. Army Material Development and Readiness Command, Alexandria, Virginia
- **F. J. Clas,** Watervliet Arsenal, Watervliet, New York
- **F. L. Jones,** *Alternate,* U. S. Army Missile Command, Redstone Arsenal, Alabama

UNITED STATES DEPARTMENT OF DEFENSE
- **E. Schwartz,** Defense Industrial Supply Center, Philadelphia, Pennsylvania

UNITED STATES DEPARTMENT OF THE NAVY
- **C. T. Gustafson,** Portsmouth Naval Shipyard, Portsmouth, New Hampshire

INDIVIDUAL MEMBERS
- **C. T. Appleton,** Jefferson, Massachusetts
- **D. N. Badgley,** Clark Equipment Company, Battle Creek, Michigan
- **J. Boehnlein,** PMC Industries, Wickliffe, Ohio
- **W. E. Bour,** Santa Monica, California
- **A. R. Breed,** Mechanical Fasteners and Assembly, Lakewood, Ohio
- **R. Browning,** Southern Gage Company, Erin, Tennessee
- **A. Butovich,** Air Industries Corp., Garden Grove, California
- **R. S. Chamerda,** The Johnson Gage Company, Bloomfield, Connecticut
- **J. F. Cramer,** Des Moines, Washington
- **J. F. Dickson,** Reed Rolled Thread Die Company, Holden, Massachusetts
- **R. B. Donahue,** Xerox Corp., Webster, New York
- **E. W. Drescher,** Lancaster, Pennsylvania
- **D. J. Emanuelli,** Greenfield Tap and Die, Greenfield, Massachusetts
- **C. G. Erickson,** Colt Industries, Sterling Die Operation, West Hartford, Connecticut
- **S. I. Kanter,** The Hanson-Whitney Company, Hartford, Connecticut
- **R. W. Lamport,** The Van Keuren Company, Watertown, Massachusetts
- **A. R. Machell, Jr.,** Xerox Corp., Rochester, New York
- **A. E. Masterson,** Watervliet, New York
- **R. E. Mazzara,** Geometric Tool, New Haven, Connecticut
- **H. G. Muenchinger,** Westerly, Rhode Island

Copyright ASME International
Provided by IHS under license with ASME
No reproduction or networking permitted without license from IHS
Not for Resale

P. V. **Pastore,** Regal Beloit Corp., South Beloit, Illinois
M. M. **Schuster,** Hi-Shear Corp., Torrance, California
A. G. **Strang,** Boyds, Maryland
L. R. **Strang,** Caterpillar Tractor Company, Peoria, Illinois
A. F. **Thibodeau,** Swanson Tool Manufacturing, Inc., West Hartford, Connecticut
J. **Turton,** The Bendix Corp., Greenfield, Massachusetts

PERSONNEL OF SUBCOMMITTEE B1.20 — PIPE THREADS

D. N. **Badgley,** *Chairman,* Clark Equipment Company, Battle Creek, Michigan
W. A. **Keaton,** *Vice-Chairman,* General Motors Technical Center, Warren, Michigan
J. S. **Hinske,** *Secretary,* Parker-Hannifin Corp., Worcester, Massachusetts
C. **Banks,** Naval Sea System Command, Washington, D.C.
M. **Bibeau,** Jamesbury Corp., Worcester, Massachusetts
R. J. **Browning,** Southern Gage Company, Erin, Tennessee
D. **Cadieux,** TRW/Greenfield Tap & Die Division, Greenfield, Massachusetts
J. A. **Casner,** Hydril Technology Center, Houston, Texas
W. O. **Clinedinst,** Belleair, Florida
W. R. **Cochran,** J&L Steel Corp., Aliquippa, Pennsylvania
F. **Dallas, Jr.,** Sawhill Tubular Division, Cyclops Corporation, Sharon, Pennsylvania
D. **Davidson,** Morse/Hemco Corp., Holland, Michigan
D. **Dodge,** Pennoyer-Dodge Company, Glendale, California
W. C. **Farrell, Jr.,** Stockham Valves & Fittings, Birmingham, Alabama
L. S. **Feldheim,** The Weatherhead Company, Cleveland, Ohio
A. C. **Flanders,** Picoma Industries, Inc., Martins Ferry, Ohio
W. A. **Franz,** U. S. Steel Corp., Pittsburgh, Pennsylvania
H. D. **Goldberg,** Allied Tube & Conduit Corp., Harvey, Illinois
W. E. **Hay,** The Pipe Machinery Company, Wickliffe, Ohio
S. I. **Kanter,** The Hanson-Whitney Company, Hartford, Connecticut
G. K. **Otten,** Wheeling Machine Products Company, Wheeling, West Virginia
R. S. **Piotrowski,** Mack Trucks, Inc., Allentown, Pennsylvania
G. **Russ,** Cummins Engine Company, Inc., Columbus, Indiana
A. D. **Shepherd, Jr.,** Litton Union/Butterfield, Derby Line, Vermont
A. G. **Strang,** Boyds, Maryland
J. **Turton,** The Bendix Corp., Inc., Greenfield, Massachusettts

Copyright ASME International
Provided by IHS under license with ASME
No reproduction or networking permitted without license from IHS
Not for Resale

CONTENTS

Foreword iii
Standards Committee Roster iv

1 Introduction 1
1.1 Scope 1
1.2 Thread Designations 1
1.3 Sealing 1
1.4 Inspection 1
1.5 Appendix 1
1.6 Related Standard 1

2 American National Standard Pipe Thread Form 4
2.1 Thread Form 4
2.2 Angle of Thread 4
2.3 Truncation and Thread Height 4

3 Specification for General Purpose Taper Pipe Threads, NPT 4
3.1 Taper Pipe Threads 4
3.2 Tolerances 9

4 Specifications for Internal Straight Threads in Pipe Couplings, NPSC 9
4.1 Straight Pipe Threads in Pipe Couplings 9

5 Specifications for Railing Joint Taper Pipe Threads, NPTR 9
5.1 Railing Joints 9

6 Specifications for Straight Pipe Threads for Mechanical Joints; NPSM, NPSL, NPSH 13
6.1 Straight Pipe Threads 13
6.2 Free-Fitting Mechanical Joints for Fixtures, NPSM 13
6.3 Loose-Fitting Mechanical Joints With Locknuts, NPSL 13
6.4 Loose-Fitting Mechanical Joints for Hose Coupling, NPSH 16

7 Gages and Gage Tolerances for American National Standard Pipe Threads 16
7.1 Design of Gages 16
7.2 Classes of Gages 16
7.3 Gage Tolerances 18
7.4 Relation of Lead and Angle Deviations to Pitch Diameter Tolerances of Gages 18

Copyright ASME International
Provided by IHS under license with ASME
No reproduction or networking permitted without license from IHS
Not for Resale

8 Gaging of Taper Pipe Threads 18
8.1 Gaging External Taper Threads 18
8.2 Gaging Internal Taper Threads 18
8.3 Gaging Practice 18
8.4 Gaging Chamfered, Countersunk, or Recessed Threads 18

9 Gaging of Straight Pipe Threads 22
9.1 Types of Gages 22
9.2 Gage Dimensions 22

Figures

1 Basic Form of American National Standard Taper Pipe Thread 2
2 American National Standard Taper Pipe Threads for Pressure-Tight Joints, NPT 4
3 American National Standard Taper Pipe Thread Notation 5
4 NPT Standard Taper Pipe Thread Plug and Ring Gages 14
5 Suggested Form of Gage Thread 14
6 Gaging External Taper Threads With Ring Gage 14
7 Gaging Internal Taper Threads 14
8 Gaging of Chamfered Threads 15

Tables

1 Limits on Crest and Root Truncation of American National Standard External and Internal Taper Pipe Threads, NPT 3
2 Basic Dimensions of American National Standard Taper Pipe Thread, NPT 6
3 Tolerances on Taper, Lead, and Angle of Pipe Threads, NPT 8
4 Dimensions, Internal Straight Threads in Pipe Coupling, NPSC 8
5 Dimensions of External and Internal Taper Pipe Threads for Railing Joints, NPTR . . . 10
6 Dimensions of External and Internal Straight Pipe Threads for Fixtures, NPSM 11
7 Dimensions, External and Internal Straight Pipe Thread for Locknut Connections, NPSL 12
8 Basic Dimensions of Threaded Plug and Ring Gages for National American National Standard Taper Pipe Threads, NPT 17
9 Tolerances for American National Standard Working Taper Pipe Thread Plug and Ring Gages, NPT 19
10 Diameter Equivalent of Deviation in Half Included Angle of Thread for Tools and Gages 20
11 Diameter Equivalent of Deviation in Lead for Tools and Gages 21

Appendix 23

Copyright ASME International
Provided by IHS under license with ASME
No reproduction or networking permitted without license from IHS
Not for Resale

AN AMERICAN NATIONAL STANDARD

PIPE THREADS, GENERAL PURPOSE (INCH)

1 INTRODUCTION

1.1 Scope

This American National Standard covers dimensions and gaging of pipe threads for general purpose applications.

1.2 Thread Designations

1.2.1 The types of pipe threads included in this Standard are designated by specifying in sequence the nominal pipe size,[1] number of threads per inch and the thread series symbol as follows:

3/8 - 18 NPT
1/8 - 27 NPSC
1/2 - 14 NPTR
1/8 - 27 NPSM
1/8 - 27 NPSL
1 - 11.5 NPSH

For left hand threads add LH to the designation, otherwise right hand threads will be understood. For example:

3/8 - 18 NPT - LH

1.2.2 Each of these letters in the symbols has a definite significance as follows:

N = National (American) Standard
P = Pipe
T = Taper
C = Coupling
S = Straight
M = Mechanical
L = Locknut
H = Hose Coupling
R = Railing Fittings

[1] Where it is necessary to use decimal notation for the size designation (as when inserting such in a computer or electronic accounting machine) the decimal equivalent of nominal pipe size may be substituted for fractional pipe sizes.

1.2.3 Coated or Plated Threads. The threaded product specifications covered in this Standard do not include an allowance for coatings or plating.

1.3 Sealing

1.3.1 Where pressure-tight joints are required, it is intended that taper pipe threads conforming to this Standard be made up wrench-tight with a sealant. To prevent galling on certain piping materials such as stainless steels, the sealant usually contains a lubricant.

1.3.2 Pipe threads designed for pressure-tight joints that may be used without sealing compounds (Dryseal Threads) are covered in ANSI B1.20.3 (Inch) and ANSI B1.20.4 (Metric Translation).

1.4 Inspection

A gaging method and tolerances are prescribed in this Standard to effect a functional inspection of the handtight L_1 engagement threads. However, conformance to this Standard requires that all basic design dimensions be met (within applicable tolerances) including extension of the thread elements to provide for wrench-tight makeup. Therefore, additional methods of gaging may be employed to evaluate conformance to the basic design dimensions. When additional methods of gaging are employed, they shall be agreed upon by the supplier and the purchaser.

1.5 Appendix

Useful and supplementary information which is not a part of this Standard is presented in the Appendix. Specifically, the Appendix gives Suggested Twist Drill Diameters for Drilled Hole Sizes for Pipe Threads.

1.6 Related Standard

Definitions of terms and symbols for thread dimensions are given in ANSI B1.7, Nomenclature, Definitions and Letter Symbols for Screw Threads.

Copyright ASME International
Provided by IHS under license with ASME
No reproduction or networking permitted without license from IHS
Not for Resale

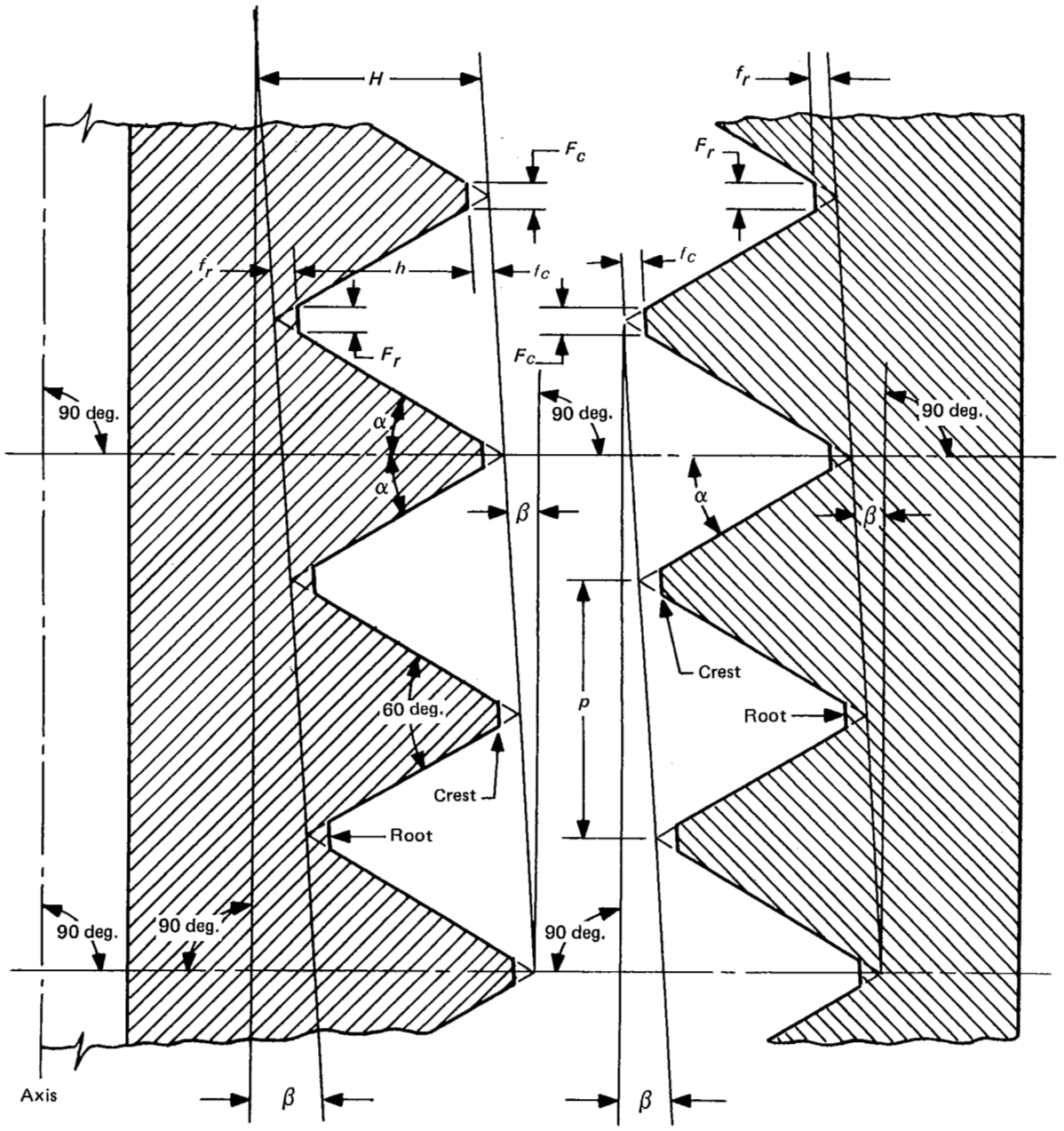

NOTATION

H = 0.866025p	= height of 60 deg. sharp V thread	β	= 1 deg. 47 min. = thread taper angle for 1/16 taper
h = 0.800000p	= height of thread on product	f_c	= depth of truncation at crest
p = 1/n	= pitch (measured parallel to axis)	f_r	= depth of truncation at root
n	= number of threads per inch	F_c	= width of flat at crest
α	= 30 deg. = thread flank angle	F_r	= width of flat at root

GENERAL NOTE: For a symmetrical straight screw thread, $H = \cot \alpha/2n$. For a symmetrical taper screw thread, $H = (\cot \alpha - \tan^2 \beta \tan \alpha)/2n$, so that the exact value for an American National Standard taper pipe thread is $H = 0.865743p$ as against $H = 0.866025p$, the value given above. For an 8-pitch thread, which is the coarsest standard taper pipe thread pitch, the corresponding values of H are 0.108218 and 0.108253 respectively, the difference being 0.000035 inch. This difference being too small to be significant, the value of $H = 0.866025p$ continues in use for threads of 0.750 in., or less, taper/ft on the diameter.

FIG. 1 BASIC FORM OF AMERICAN NATIONAL STANDARD TAPER PIPE THREAD

Copyright ASME International
Provided by IHS under license with ASME
No reproduction or networking permitted without license from IHS
Not for Resale

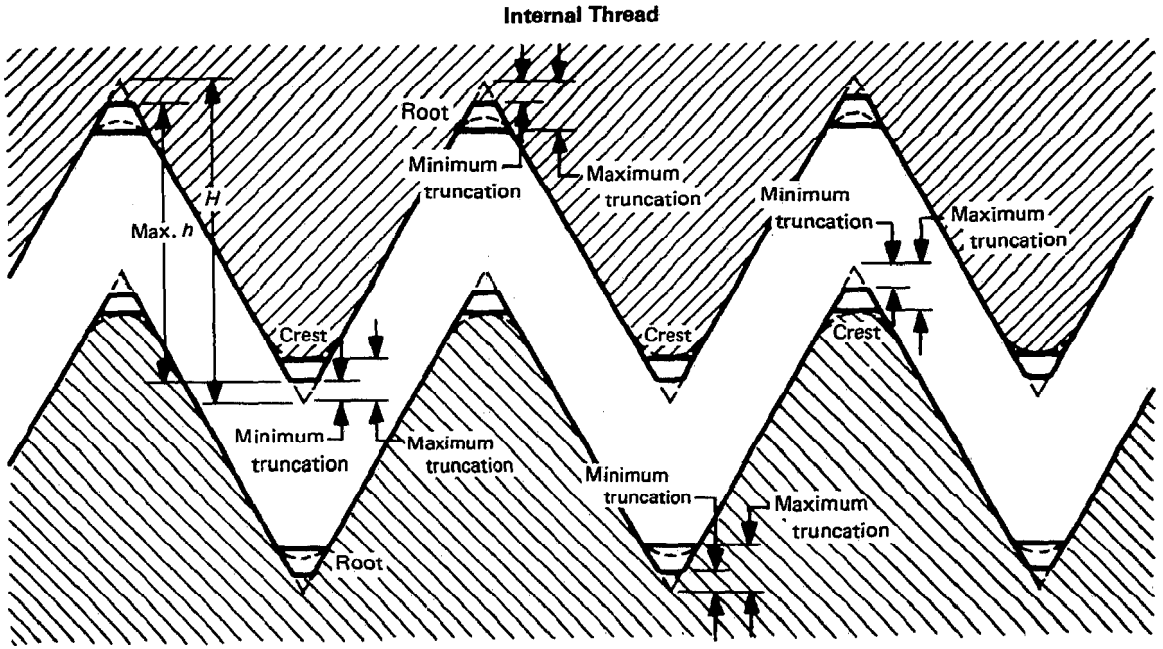

TABLE 1 LIMITS ON CREST AND ROOT TRUNCATION OF AMERICAN NATIONAL STANDARD EXTERNAL AND INTERNAL TAPER PIPE THREADS, NPT[1]

Threads/ in. (n)	Height of Sharp V Thread (H)	Height of Thread (h)		Truncation (f)					Equivalent Width of Flat (F)				
				Minimum		Maximum		Tolerance	Minimum		Maximum		Tolerance
		Maximum	Minimum	Formula	in.	Formula	in.		Formula	in.	Formula	in.	
1	2	3	4	5	6	7	8	9	10	11	12	13	14
27	0.03208	0.02963	0.02496	0.033*p*	0.0012	0.096*p*	0.0036	0.0024	0.038*p*	0.0014	0.111*p*	0.0041	0.0027
18	0.04811	0.04444	0.03833	0.033*p*	0.0018	0.088*p*	0.0049	0.0031	0.038*p*	0.0021	0.102*p*	0.0057	0.0036
14	0.06186	0.05714	0.05071	0.033*p*	0.0024	0.078*p*	0.0056	0.0032	0.038*p*	0.0027	0.090*p*	0.0064	0.0037
11.5	0.07531	0.06957	0.06261	0.033*p*	0.0029	0.073*p*	0.0063	0.0034	0.038*p*	0.0033	0.084*p*	0.0073	0.0040
8	0.10825	0.10000	0.09275	0.033*p*	0.0041	0.062*p*	0.0078	0.0037	0.038*p*	0.0048	0.072*p*	0.0090	0.0042

NOTE:

(1) The basic dimensions of the American National Standard Taper Pipe Thread are given in inches to four and five decimal places. While this implies a greater degree of precision than is ordinarily attained, these dimensions are so expressed for the purpose of eliminating errors in computations.

Copyright ASME International
Provided by IHS under license with ASME
No reproduction or networking permitted without license from IHS
Not for Resale

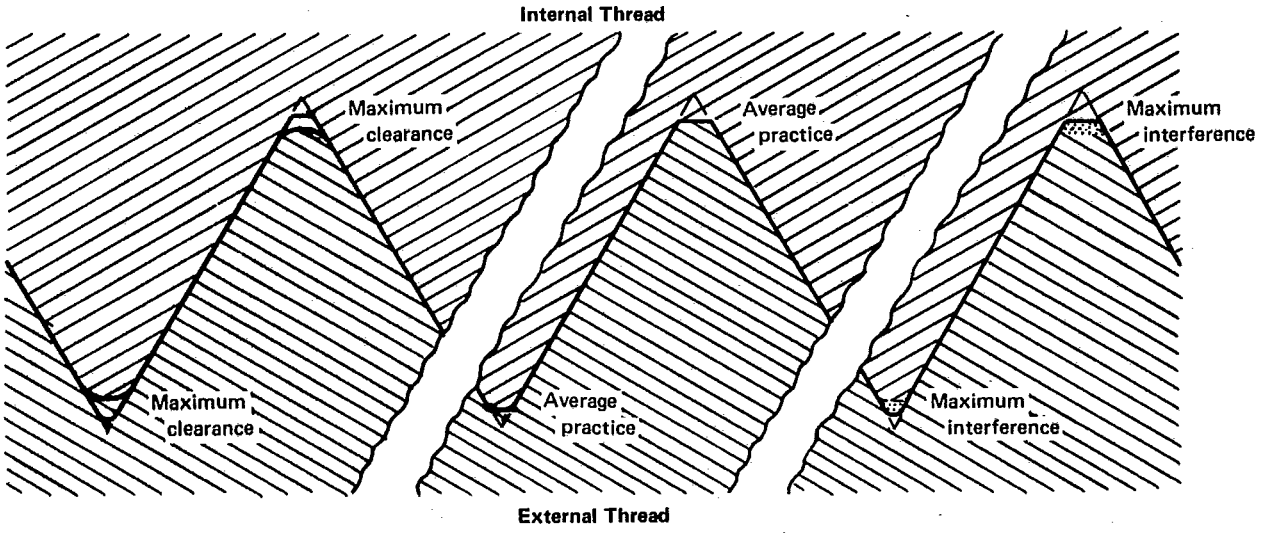

GENERAL NOTE:
When threaded joints are made up wrench-tight with lubricant or sealer, it is intended that the flanks shall be in contact.

FIG. 2. AMERICAN NATIONAL STANDARD TAPER PIPE THREADS FOR PRESSURE-TIGHT JOINTS, NPT

2 AMERICAN NATIONAL STANDARD PIPE THREAD FORM

2.1 Thread Form

The form of thread profile specified in this Standard shall be known as the American National Standard Pipe Thread Form. The relations as specified herein, for form of thread and general notation are shown in Fig. 1.

2.2 Angle of Thread

The angle between the sides of the thread is 60 deg when measured in an axial plane. The line bisecting this angle is perpendicular to the axis.

2.3 Truncation and Thread Height

The height of the sharp V thread, H, is

$$H = 0.866025p = 0.866025/n$$

where

p = pitch of thread
n = threads per inch

The basic maximum depth of the truncated thread, h (see Fig. 1), is based on factors entering into the manufacture of cutting tools and the making of tight joints.

$$h = 0.800p = 0.800/n$$

The crest and root of pipe threads are truncated a minimum of $0.033p$. The maximum depth of truncation for the crest and root of these pipe threads will be found in Table 1. The crests and roots of the external and internal threads may be truncated either parallel to the pitch line or parallel to the axis.

The sketch in Table 2, giving a sectional view of this Standard thread form, represents the truncated thread form by a straight line. However, when closely examined, the crests and roots of commercially manufactured pipe threads appear slightly rounded. When crests and roots of threading tools or chasers lie within the limits shown in Table 1, the pipe threads of products produced by such means are acceptable on the basis of in-process control.

3 SPECIFICATION FOR GENERAL PURPOSE TAPER PIPE THREADS, NPT

3.1 Taper Pipe Threads

Threads made in accordance with these specifications consist of an external taper and an internal taper thread, to form the normal type of joint having general application on pipe and fittings. See Fig. 2.

NPT taper pipe threads are intended to be made up wrench-tight and with a sealant whenever a pressure-tight joint is required.

Copyright ASME International
Provided by IHS under license with ASME
No reproduction or networking permitted without license from IHS

Not for Resale

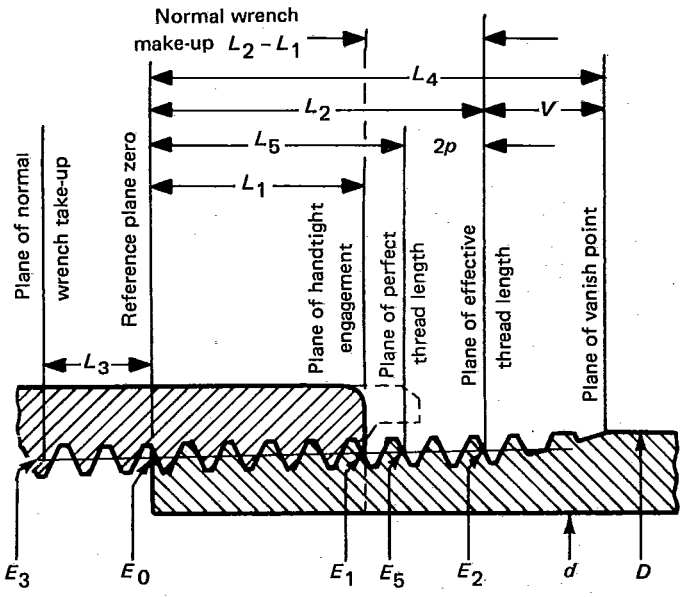

FIG. 3 AMERICAN NATIONAL STANDARD TAPER PIPE THREAD NOTATION

Sealing is affected by out-of-roundness which is possible between the wrench-tight mated parts in final assembly. This will vary depending on the method for producing the thread in conjunction with the elasticity and/or ductility of the mating parts and the resultant conformance at final assembly.

3.1.1 Thread Designation and Notation. American National Standard Taper Pipe Threads are designated in accordance with 1.2.1 as follows:

3/8 - 18 NPT

Standard notation applicable to American National Standard Taper Pipe Threads is shown in Fig. 3.

3.1.2 Designation of Plated Threads. The product specifications of this Standard do not include an allowance for plating. If plating is desired, it may be necessary to modify the threads since the same final gaging requirements must be satisfied for plated and unplated parts. This may be emphasized by adding the words AFTER PLATING to the designation. For manufacturing purposes, notes for plated taper pipe threads may specify the gage limits (turns or threads engagement) before plating followed by the words BEFORE PLATING. These should be followed by the standard gage limits (turns or threads engagement) after plating and the words AFTER PLATING.

3.1.3 Form of Thread. The form of the thread for American National Standard Taper Pipe Threads is that specified in 2.1.

3.1.4 Taper of Thread. The taper of the thread is 1 in 16 or 0.75 in./ft measured on the diameter and along the axis.

3.1.5 Diameter of Thread. The basic pitch diameters of the taper thread are determined by the following formulas[2] based on the outside diameter of the pipe and the pitch of the thread:

$$E_0 = D - (0.05D + 1.1)\,1/n$$
$$= D - (0.05D + 1.1)\,p$$
$$E_1 = E_0 + 0.0625L_1$$

where

D = outside diameter of pipe
E_0 = pitch diameter of thread at end of pipe or small end of external thread
E_1 = pitch diameter of thread at the gaging notch or large end of internal thread
L_1 = normal engagement by hand between external and internal threads
n = threads per inch

[2]For the 1/8-27 and 1/4-18 sizes, E_1 approx. $= D - (0.05D + 0.827)p$.

Copyright ASME International
Provided by IHS under license with ASME
No reproduction or networking permitted without license from IHS

Not for Resale

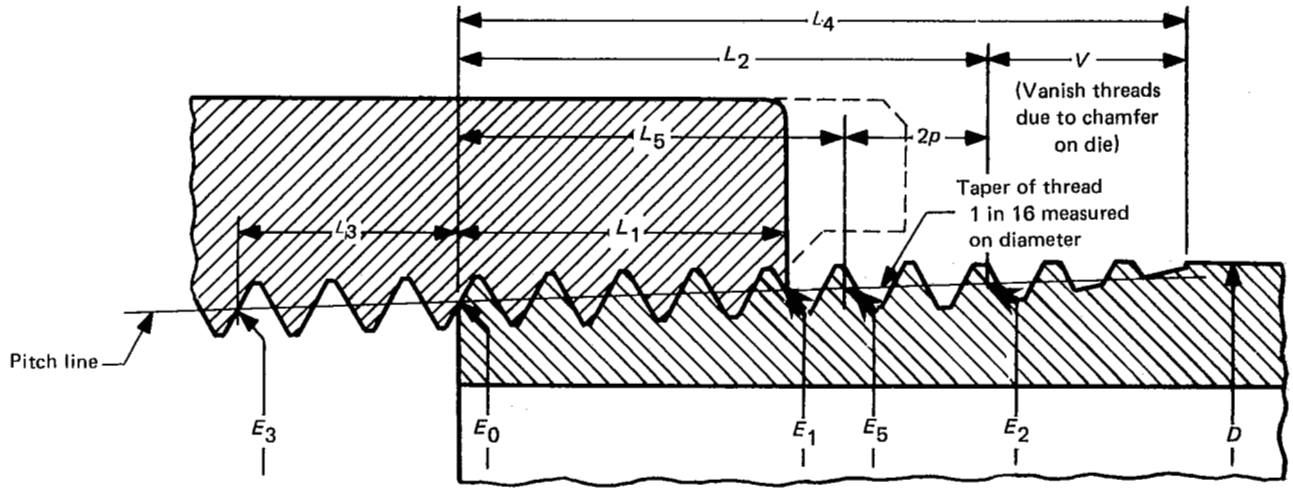

TABLE 2 BASIC DIMENSIONS OF AMERICAN NATIONAL STANDARD TAPER PIPE THREAD, NPT[1]

Nominal Pipe Size	O.D. of Pipe (D)	Threads/in. (n)	Pitch of Thread (P)	Pitch Diam. at Beginning of External Thread (E_0)	Handtight Engagement			Effective Thread, External		
					Length[2] (L_1)		Diam.[3] (E_1)	Length[4] (L_2)		Diam. (E_2)
					inch	Threads		inch	Threads	
1	2	3	4	5	6	7	8	9	10	11
1/16	0.3125	27	0.03704	0.27118	0.160	4.32	0.28118	0.2611	7.05	0.28750
1/8	0.405	27	0.03704	0.36351	0.1615	4.36	0.37360	0.2639	7.12	0.38000
1/4	0.540	18	0.05556	0.47739	0.2278	4.10	0.49163	0.4018	7.23	0.50250
3/8	0.675	18	0.05556	0.61201	0.240	4.32	0.62701	0.4078	7.34	0.63750
1/2	0.840	14	0.07143	0.75843	0.320	4.48	0.77843	0.5337	7.47	0.79179
3/4	1.050	14	0.07143	0.96768	0.339	4.75	0.98887	0.5457	7.64	1.00179
1	1.315	11.5	0.08696	1.21363	0.400	4.60	1.23863	0.6828	7.85	1.25630
1 1/4	1.660	11.5	0.08686	1.55713	0.420	4.83	1.58338	0.7068	8.13	1.60130
1 1/2	1.900	11.5	0.08696	1.79609	0.420	4.83	1.82234	0.7235	8.32	1.84130
2	2.375	11.5	0.08696	2.26902	0.436	5.01	2.29627	0.7565	8.70	2.31630
2 1/2	2.875	8	0.12500	2.71953	0.682	5.46	2.76216	1.1375	9.10	2.79062
3	3.500	8	0.12500	3.34062	0.766	6.13	3.38850	1.2000	9.60	3.41562
3 1/2	4.000	8	0.12500	3.83750	0.821	6.57	3.88881	1.2500	10.00	3.91562
4	4.500	8	0.12500	4.33438	0.844	6.75	4.38712	1.3000	10.40	4.41562
5	5.563	8	0.12500	5.39073	0.937	7.50	5.44929	1.4063	11.25	5.47862
6	6.625	8	0.12500	6.44609	0.958	7.66	6.50597	1.5125	12.10	6.54062
8	8.625	8	0.12500	8.43359	1.063	8.50	8.50003	1.7125	13.70	8.54062
10	10.750	8	0.12500	10.54531	1.210	9.68	10.62094	1.9250	15.40	10.66562
12	12.750	8	0.12500	12.53281	1.360	10.88	12.61781	2.1250	17.00	12.66562
14 O.D.	14.000	8	0.12500	13.77500	1.562	12.50	13.87262	2.2500	18.00	13.91562
16 O.D.	16.000	8	0.12500	15.76250	1.812	14.50	15.87575	2.4500	19.60	15.91562
18 O.D.	18.000	8	0.12500	17.75000	2.000	16.00	17.87500	2.6500	21.20	17.91562
20 O.D.	20.000	8	0.12500	19.73750	2.125	17.00	19.87031	2.8500	22.80	19.91562
24 O.D.	24.000	8	0.12500	23.71250	2.375	19.00	23.86094	3.2500	26.00	23.91562

NOTES:

(1) The basic dimensions of the American National Standard Taper Pipe Thread are given in inches to four or five decimal places. While this implies a greater degree of precision than is ordinarily attained, these dimensions are the basis of gage dimensions and are so expressed for the purpose of eliminating errors in computations.

(2) Also length of thin ring gage and length from gaging notch to small end of plug gage.

(3) Also pitch diameter at gaging notch (handtight plane).

(4) Also length of plug gage.

Copyright ASME International
Provided by IHS under license with ASME
No reproduction or networking permitted without license from IHS
Not for Resale

TABLE 2 BASIC DIMENSIONS OF AMERICAN NATIONAL STANDARD TAPER PIPE THREAD, NPT[1] (CONT'D)

Nominal Pipe Size	Length, L_1 Plane to L_2 Plane External Thread ($L_2 - L_1$)		Wrench Makeup Length for Internal Thread[7]			Vanish Thread (V)		Overall[8] Length External Thread (L_4)	Nominal Complete External Threads[5]		Height of Thread (h)	Increase in Diam./ Thread ($0.0625/n$)	Basic[6] Minor Diam. at Small End of Pipe (K_0)
			Length (L_3)		Diam. (E_3)				Length (L_5)	Diam. (E_5)			
	in.	Thread	in.	Thread		in.	Thread						
1	12	13	14	15	16	17	18	19	20	21	22	23	24
1/16	0.1011	2.73	0.1111	3	0.26424	0.1285	3.47	0.3896	0.1870	0.28287	0.02963	0.00231	0.2416
1/8	0.1024	2.76	0.1111	3	0.35656	0.1285	3.47	0.3924	0.1898	0.37537	0.02963	0.00231	0.3339
1/4	0.1740	3.13	0.1667	3	0.46697	0.1928	3.47	0.5946	0.2907	0.49556	0.04444	0.00347	0.4329
3/8	0.1678	3.02	0.1667	3	0.60160	0.1928	3.47	0.6006	0.2967	0.63056	0.04444	0.00347	0.5676
1/2	0.2137	2.99	0.2143	3	0.74504	0.2478	3.47	0.7815	0.3909	0.78286	0.05714	0.00446	0.7013
3/4	0.2067	2.89	0.2143	3	0.95429	0.2478	3.47	0.7935	0.4029	0.99286	0.05714	0.00446	0.9105
1	0.2828	3.25	0.2609	3	1.19733	0.3017	3.47	0.9845	0.5089	1.24543	0.06957	0.00543	1.1441
1 1/4	0.2868	3.30	0.2609	3	1.54083	0.3017	3.47	1.0085	0.5329	1.59043	0.06957	0.00543	1.4876
1 1/2	0.3035	3.49	0.2609	3	1.77978	0.3017	3.47	1.0252	0.5496	1.83043	0.06957	0.00543	1.7265
2	0.3205	3.69	0.2609	3	2.25272	0.3017	3.47	1.0582	0.5826	2.30543	0.06957	0.00543	2.1995
2 1/2	0.4555	3.64	0.2500	2	2.70391	0.4337	3.47	1.5712	0.8875	2.77500	0.100000	0.00781	2.6195
3	0.4340	3.47	0.2500	2	3.32500	0.4337	3.47	1.6337	0.9500	3.40000	0.100000	0.00781	3.2406
3 1/2	0.4290	3.43	0.2500	2	3.82188	0.4337	3.47	1.6837	1.0000	3.90000	0.100000	0.00781	3.7375
4	0.4560	3.65	0.2500	2	4.31875	0.4337	3.47	1.7337	1.0500	4.40000	0.100000	0.00781	4.2344
5	0.4693	3.75	0.2500	2	5.37511	0.4337	3.47	1.8400	1.1563	5.46300	0.100000	0.00781	5.2907
6	0.5545	4.44	0.2500	2	6.43047	0.4337	3.47	1.9462	1.2625	6.52500	0.100000	0.00781	6.3461
8	0.6495	5.20	0.2500	2	8.41797	0.4337	3.47	2.1462	1.4625	8.52500	0.100000	0.00781	8.3336
10	0.7150	5.72	0.2500	2	10.52969	0.4337	3.47	2.3587	1.6750	10.65000	0.100000	0.00781	10.4453
12	0.7650	6.12	0.2500	2	12.51719	0.4337	3.47	2.5587	1.8750	12.65000	0.100000	0.00781	12.4328
14 O.D.	0.6880	5.50	0.2500	2	13.75938	0.4337	3.47	2.6837	2.0000	13.90000	0.100000	0.00781	13.6750
16 O.D.	0.6380	5.10	0.2500	2	15.74688	0.4337	3.47	2.8837	2.2000	15.90000	0.100000	0.00781	15.6625
18 O.D.	0.6500	5.20	0.2500	2	17.73438	0.4337	3.47	3.0837	2.4000	17.90000	0.100000	0.00781	17.6500
20 O.D.	0.7250	5.80	0.2500	2	19.72188	0.4337	3.47	3.2837	2.6000	19.90000	0.100000	0.00781	19.6375
24 O.D.	0.8750	7.00	0.2500	2	23.69688	0.4337	3.47	3.6837	3.0000	23.90000	0.100000	0.00781	23.6125

(5) The length L_5 from the end of the pipe determines the plane beyond which the thread form is incomplete at the crest. The next two threads are complete at the root. At this plane the cone formed by the crests of the thread intersects the cylinder forming the external surface of the pipe. $L_5 = L_2 - 2p$.

(6) Given as information for use in selecting tap drills. (See Appendix).

(7) Military Specification MIL—P—7105 gives the wrench makeup as three threads for sizes 3 and smaller. The E_3 dimensions are as follows: Nominal pipe size 2½ = 2.69609 and size 3 = 3.31719; sizes 2 and smaller same as above, col. 16.

(8) Reference dimension.

Copyright ASME International
Provided by IHS under license with ASME
No reproduction or networking permitted without license from IHS

Not for Resale

TABLE 3 TOLERANCES ON TAPER, LEAD, AND ANGLE OF PIPE THREADS, NPT

Nominal Pipe Size	Threads/in. (n)	Tolerances			
		Taper on Pitch Line (3/4 in./ft)		Lead in Length of Effective Threads (±)	60 deg. Angle of Threads, degrees (±)
		Maximum	Minimum		
1	2	3	4	5	6
1/16, 1/8	27	+ 1/8	- 1/16	0.003	2 1/2
1/4, 3/8	18	+ 1/8	- 1/16	0.003	2
1/2, 3/4	14	+ 1/8	- 1/16	0.003[1]	2
1, 1 1/4, 1 1/2, 2	11.5	+ 1/8	- 1/16	0.003[1]	1 1/2
2 1/2 and larger	8	+ 1/8	- 1/16	0.003[1]	1 1/2

GENERAL NOTE:
For tolerances on depth of thread see Table 1, and for tolerances on functional size, see 3.2.1.
NOTE:
(1) The tolerance on lead shall be ±0.003 in./in. on any size threaded to an effective thread length greater than 1 in.

TABLE 4 DIMENSIONS, INTERNAL STRAIGHT THREADS IN PIPE COUPLING, NPSC (Pressure-tight Joints With Lubricant or Sealant)

Nominal Pipe Size	O.D. of Pipe (D)	Threads/in. (n)	Minor Diameter, Minimum	Pitch Diameter[1]	
				Minimum	Maximum
1	2	3	4	5	6
1/8	0.405	27	0.340	0.3701	0.3771
1/4	0.540	18	0.442	0.4864	0.4968
3/8	0.675	18	0.577	0.6218	0.6322
1/2	0.840	14	0.715	0.7717	0.7851
3/4	1.050	14	0.925	0.9822	0.9956
1	1.315	11.5	1.161	1.2305	1.2468
1 1/4	1.660	11.5	1.506	1.5752	1.5915
1 1/2	1.900	11.5	1.745	1.8142	1.8305
2	2.375	11.5	2.219	2.2881	2.3044
2 1/2	2.875	8	2.650	2.7504	2.7739
3	3.500	8	3.277	3.3768	3.4002
3 1/2	4.000	8	3.777	3.8771	3.9005
4	4.500	8	4.275	4.3754	4.3988

NOTE:
(1) Attention is called to the fact that the actual pitch diameter of the straight tapped hole will be slightly smaller than the value given when gaged with a taper plug gage as specified in 9.1.2.

Copyright ASME International
Provided by IHS under license with ASME
No reproduction or networking permitted without license from IHS

Not for Resale

3.1.6 Length of Thread. The basic length of the effective external taper thread L_2, is determined by the following formula based on the outside diameter of the pipe and the pitch of the thread:

$$L_2 = (0.80D + 6.8)\,1/n$$
$$= (0.80D + 6.8)\,p$$

where

D = outside diameter of pipe
n = threads per inch

This formula determines directly the length of effective thread which includes two usable threads slightly incomplete at the crest.

3.1.7 Engagement Between External and Internal Taper Threads. The normal length of engagement between external and internal taper threads when screwed together handtight is shown in col. 6, Table 2. This length is controlled by the construction and use of the gages. It is recognized that in special applications, such as flanges for high pressure work, longer thread engagement is used, in which case the pitch diameter (dimension E_1, Table 2) is maintained and the pitch diameter E_0 at the end of the pipe is proportionately smaller.

3.1.8 Basic Dimensions. The basic dimensions of taper pipe threads, derived from the above specifications, are given in Table 2. All dimensions are given in inches unless otherwise specified.

3.2 Tolerances

3.2.1 Manufacturing Tolerance on Product. The maximum allowable deviation in the commercial product is one turn large or small from gages made to the basic dimensions. See 8.2 and 8.3.

3.2.2 Tolerances on Thread Elements. The permissible deviations in thread elements are given in Table 3. This table is a guide for establishing limits of the thread elements of taps, dies, and thread chasers. Conformance to these limits may be required on product threads, in which case specifications shall require control and checking of thread elements.

On pipe fittings and valves (not steel or high grade alloys used in critical services) for steam pressures 300 lb and below, it is intended that plug and ring gage practices as established in this Standard be used in conjunction with tooling control of thread elements, e.g., taps and dies, to provide satisfactory control of functional size. Therefore, no tolerances on thread elements have been established for this class.

For service conditions, where more exact checks are required, procedures have been developed by industry to supplement the standard plug and ring gage method of gaging.

4 SPECIFICATIONS FOR INTERNAL STRAIGHT THREADS IN PIPE COUPLINGS, NPSC

4.1 Straight Pipe Threads in Pipe Couplings

Threads in pipe couplings made in accordance with these specifications are straight (parallel) threads of the same thread form as the American National Standard Taper Pipe Thread specified in 2.1. They are used to form pressure-tight joints when assembled with an American National Standard external taper pipe thread and made up wrench-tight with lubricant or sealant.

4.1.1 Thread Designation. The American National Standard Coupling Straight Pipe Threads are designated in accordance with 1.2.1 as follows:

1/8 - 27 NPSC

4.1.2 Dimensions and Limits of Size. The dimensions and pitch diameter limits of size are specified in Table 4. The pitch diameter limits of size correspond to one and one-half turns large or small of the standard taper pipe thread. The major and minor diameters vary with the pitch diameter, as the American National Standard Pipe Thread form is maintained within the truncation tolerances shown in Table 1.

5 SPECIFICATIONS FOR RAILING JOINT TAPER PIPE THREADS, NPTR

5.1 Railing Joints

Railing joints that require a rigid mechanical thread joint may be made with external and internal taper threads.

The external thread is basically the same as the American National Standard Taper Pipe Thread, except that it is shortened to permit the use of the

Copyright ASME International
Provided by IHS under license with ASME
No reproduction or networking permitted without license from IHS

Not for Resale

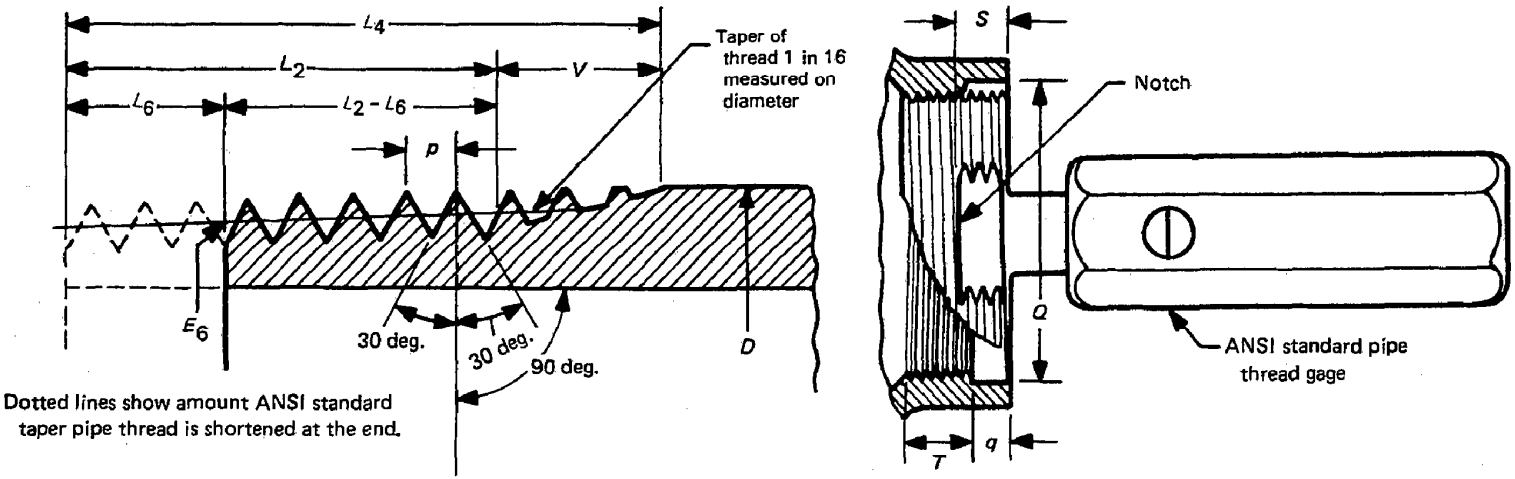

TABLE 5 DIMENSIONS OF EXTERNAL AND INTERNAL TAPER PIPE THREADS FOR RAILING JOINTS, NPTR[1]
(Mechanical Joints)

Nom. Pipe Size	O.D. of Pipe (D)	Threads/ in. (n)	Height of Thread (h)	Pitch Diameter at End of External Thread (E_6)	Shortening of Thread (L_6)		Length of Effective Thread ($L_2 - L_6$)		Total Length of External Thread, max. ($L_4 - L_6$)		Incomplete Threads due to Chamfer of Die, max. (V)		Depth of Recess in Fitting (q)	Dia. of Recess in Fitting (Q)	Length (T)	Distance Gage[2] Notch comes below Face of Fitting (S)	
					in.	Threads	in.	Threads	in.	Threads	in.	Threads	Minimum	Minimum	Minimum	in.	Threads
1	2	3	4	5	6	7	8	9	10	11	12	13	14	15	16	17	18
½	0.840	14	0.0571	0.7718	0.214	3	0.320	4.47	0.499	6.98	0.179	2½	0.18	0.86	0.25	0.286	4
¾	1.050	14	0.0571	0.9811	0.214	3	0.332	4.64	0.510	7.15	0.179	2½	0.18	1.07	0.25	0.286	4
1	1.315	11.5	0.0696	1.2299	0.261	3	0.422	4.85	0.639	7.35	0.217	2½	0.22	1.34	0.30	0.348	4
1¼	1.660	11.5	0.0696	1.5734	0.261	3	0.446	5.13	0.707	8.13	0.261	3	0.26	1.68	0.39	0.348	4
1½	1.900	11.5	0.0696	1.8124	0.261	3	0.463	5.32	0.724	8.33	0.261	3	0.26	1.92	0.43	0.348	4
2	2.375	11.5	0.0696	2.2853	0.261	3	0.496	5.70	0.757	8.70	0.261	3	0.26	2.40	0.43	0.348	4
2½	2.875	8	0.1000	2.7508	0.500	4	0.638	5.10	1.013	8.10	0.375	3	0.38	2.90	0.63	0.625	5
3	3.500	8	0.1000	3.3719	0.500	4	0.700	5.60	1.075	8.60	0.375	3	0.38	3.53	0.63	0.625	5
3½	4.000	8	0.1000	3.8688	0.500	4	0.750	6.00	1.125	9.00	0.375	3	0.38	4.04	0.63	0.625	5
4	4.500	8	0.1000	4.3656	0.500	4	0.800	6.40	1.175	9.40	0.375	3	0.38	4.54	0.63	0.625	5

NOTES:
(1) These dimensions agree with those developed by the Manufacturers Standardization Society of the Valve and Fittings Industry. Thread lengths are specified to three decimal places for convenience.
(2) American National Standard Taper Pipe Thread Plug Gage. See Section 7.

Copyright ASME International
Provided by IHS under license with ASME
No reproduction or networking permitted without license from IHS
Not for Resale

AN AMERICAN NATIONAL STANDARD
PIPE THREADS, GENERAL PURPOSE (INCH)

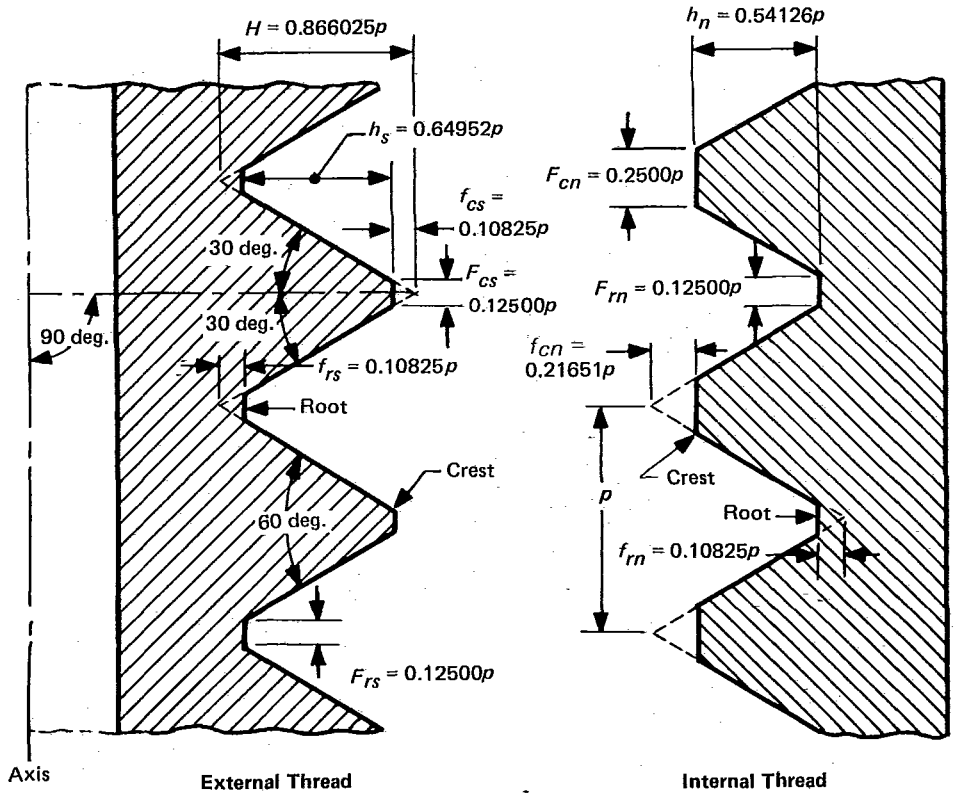

TABLE 6 DIMENSIONS OF EXTERNAL AND INTERNAL STRAIGHT PIPE THREADS FOR FIXTURES, NPSM
(Free Fitting Mechanical Joints)

Nom. Pipe Size	O.D. of Pipe (*D*)	Threads/ in.	Allow-ance	External Thread, Class 2A				Internal Thread, Class 2B			
				Major Diameter		Pitch Diameter		Minor Diameter		Pitch Diameter	
				Maximum	Minimum	Maximum	Minimum	Minimum	Maximum	Minimum[1]	Maximum
1	2	3	4	5	6	7	8	9	10	11	12
1/8	0.405	27	0.0011	0.397	0.390	0.3725	0.3689	0.358	0.364	0.3736	0.3783
1/4	0.540	18	0.0013	0.526	0.517	0.4903	0.4859	0.468	0.481	0.4916	0.4974
3/8	0.675	18	0.0014	0.662	0.653	0.6256	0.6211	0.603	0.612	0.6270	0.6329
1/2	0.840	14	0.0015	0.823	0.813	0.7769	0.7718	0.747	0.759	0.7784	0.7851
3/4	1.050	14	0.0016	1.034	1.024	0.9873	0.9820	0.958	0.970	0.9889	0.9958
1	1.315	11.5	0.0017	1.293	1.281	1.2369	1.2311	1.201	1.211	1.2386	1.2462
1 1/4	1.660	11.5	0.0018	1.638	1.626	1.5816	1.5756	1.546	1.555	1.5834	1.5912
1 1/2	1.900	11.5	0.0018	1.877	1.865	1.8205	1.8144	1.785	1.794	1.8223	1.8302
2	2.375	11.5	0.0019	2.351	2.339	2.2944	2.2882	2.259	2.268	2.2963	2.3044
2 1/2	2.875	8	0.0022	2.841	2.826	2.7600	2.7526	2.708	2.727	2.7622	2.7720
3	3.500	8	0.0023	3.467	3.452	3.3862	3.3786	3.334	3.353	3.3885	3.3984
3 1/2	4.000	8	0.0023	3.968	3.953	3.8865	3.8788	3.835	3.848	3.8888	3.8988
4	4.500	8	0.0023	4.466	4.451	4.3848	4.3771	4.333	4.346	4.3871	4.3971
5	5.563	8	0.0024	5.528	5.513	5.4469	5.4390	5.395	5.408	5.4493	5.4598
6	6.625	8	0.0024	6.585	6.570	6.5036	6.4955	6.452	6.464	6.5060	6.5165

GENERAL NOTES:

(a) NPSM threads are of Unified screw thread form to Classes 2A/2B tolerances, having the minimum pitch diameter of the internal thread basic and equal to E_1 of NPT threads.

(b) The minor diameters of external threads and major diameters of internal threads are those as produced by commercial straight pipe dies and commercial ground straight pipe taps.

The major diameter of the external thread has been calculated on the basis of a truncation of 0.10825*p*, and the minor diameter of the internal thread has been calculated on the basis of a truncation of 0.21651*p*, to provide no interference at crest and root when product is gaged with gages made in accordance with 9.2.

NOTE:

(1) Column 11 is the same as the pitch diameter at the large end of internal thread, E_1, *Basic*. (See Table 2, col. 8.)

Copyright ASME International
Provided by IHS under license with ASME
No reproduction or networking permitted without license from IHS
Not for Resale

AN AMERICAN NATIONAL STANDARD
PIPE THREADS, GENERAL PURPOSE (INCH)

ANSI/ASME B1.20.1-1983

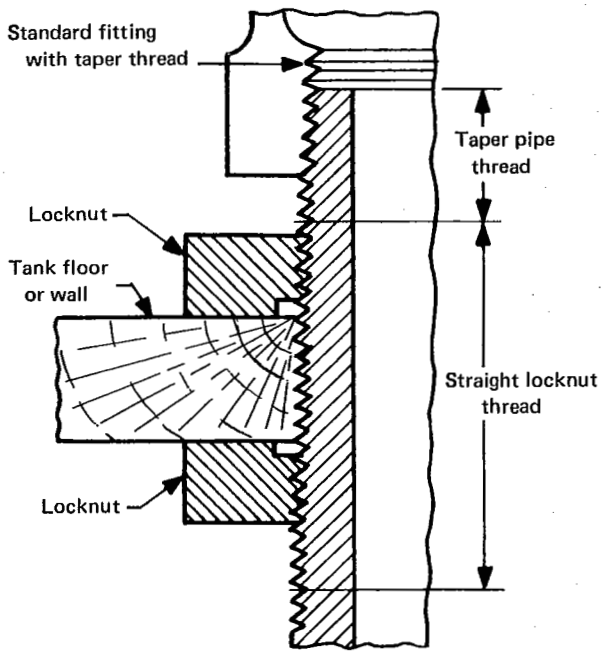

TABLE 7 DIMENSIONS, EXTERNAL AND INTERNAL STRAIGHT PIPE THREAD FOR LOCKNUT CONNECTIONS, NPSL (Loose Fitting Mechanical Joints)

Nominal Pipe Size	O.D. of Pipe (*D*)	Threads/ inch	External Threads			Internal Threads		
			Maximum[1] Major Diameter	Pitch Diameter		Minimum[1] Minor Diameter	Pitch Diameter	
				Maximum	Minimum		Minimum	Maximum
1	2	3	4	5	6	7	8	9
1/8	0.405	27	0.409	0.3840	0.3805	0.362	0.3863	0.3989
1/4	0.540	18	0.541	0.5038	0.4986	0.470	0.5073	0.5125
3/8	0.675	18	0.678	0.6409	0.6357	0.607	0.6444	0.6496
1/2	0.840	14	0.844	0.7963	0.7896	0.753	0.8008	0.8075
3/4	1.050	14	1.054	1.0067	1.0000	0.964	1.0112	1.0179
1	1.315	11.5	1.318	1.2604	1.2523	1.208	1.2658	1.2739
1 1/4	1.660	11.5	1.663	1.6051	1.5970	1.553	1.6106	1.6187
1 1/2	1.900	11.5	1.902	1.8441	1.8360	1.792	1.8495	1.8576
2	2.375	11.5	2.376	2.3180	2.3099	2.265	2.3234	2.3315
2 1/2	2.875	8	2.877	2.7934	2.7817	2.718	2.8012	2.8129
3	3.500	8	3.503	3.4198	3.4081	3.344	3.4276	3.4393
3 1/2	4.000	8	4.003	3.9201	3.9084	3.845	3.9279	3.9396
4	4.500	8	4.502	4.4184	4.4067	4.343	4.4262	4.4379
5	5.563	8	5.564	5.4805	5.4688	5.405	5.4884	5.5001
6	6.625	8	6.620	6.5372	6.5255	6.462	6.5450	6.5567
8	8.625	8	8.615	8.5313	8.5196	8.456	8.5391	8.5508
10	10.750	8	10.735	10.6522	10.6405	10.577	10.6600	10.6717
12	12.750	8	12.732	12.6491	12.6374	12.574	12.6569	12.6686

NOTE:

(1) NPSL threads are standard pipe thread form where the pitch diameters of the external threads are fixed at 2.5 and 4 turns larger than basic E_1, and where the pitch diameters of the internal threads are fixed at 5 and 6.5 turns larger than basic E_1, thus providing an allowance equivalent to one turn of the standard taper pipe thread.

As the American National Standard Straight Pipe Thread form of thread is produced by a single tool, the major and the minor diameters of the internal thread and the minor diameter of the external thread are presumed to vary with the pitch diameter. The major diameter of the external thread is usually determined by the diameter of the pipe. These theoretical diameters result from adding the depth of the truncated thread (0.666025 X p) to the maximum pitch diameters in col. 5, and it should be understood that commercial pipe will not always have these maximum major diameters.

The locknut thread is established on the basis of retaining the greatest possible amount of metal thickness between the bottom of the thread and the inside of the pipe.

In order that a locknut may fit loosely on the externally threaded part, an allowance equal to the *increase in pitch diameter per turn* is provided, with a tolerance of 1.5 turns for both external and internal threads.

Copyright ASME International
Provided by IHS under license with ASME
No reproduction or networking permitted without license from IHS

Not for Resale

larger end of the pipe thread. See Table 5. The dimensions of these external and internal threads are shown in Table 5. A recess in the fitting provides a covering for the last scratch or sharp edges of incomplete threads on the pipe.

5.1.1 Thread Designation. American National Standard Railing Joint Taper Pipe Threads are designated in accordance with 1.2.1 as follows:

1/2 - 14 NPTR

5.1.2 Form of Thread. The form of the thread is the same as the form of the American National Standard Taper Pipe Thread shown in Fig. 1.

5.1.3 Tolerances on Thread Elements. The gaging of these threads is specified in Table 5. The maximum allowable deviation in the external thread is no turns large and one turn small. The maximum allowable deviation in the internal thread is one turn large, no turns small.

6 SPECIFICATIONS FOR STRAIGHT PIPE THREADS FOR MECHANICAL JOINTS; NPSM, NPSL, NPSH

6.1 Straight Pipe Threads

In addition to pressure-tight pipe joints, for which taper external threads and either taper or straight internal threads are used, there are mechanical joints where straight pipe threads are used to advantage on both external and internal threads. Three of these straight pipe thread joints are covered by this Standard, all of which are based on the pitch diameter of the American National Standard Taper Pipe Thread at the gaging notch (dimension E_1 of Table 2) but have various truncations at crest and root as described below. These three types of joints are as follows:

(*a*) free-fitting mechanical joints for fixtures, Table 6, both external and internal, NPSM.

(*b*) loose-fitting mechanical joints with locknuts, Table 7, both external and internal, NPSL.

(*c*) loose-fitting mechanical joints for hose couplings (ANSI B2.4), NPSH.

6.1.1 Thread Designations. The above types of straight pipe threads for mechanical joints are designated in accordance with 1.2.1 as follows:

1/8 - 27 NPSM
1/8 - 27 NPSL
1 - 11.5 NPSH

6.1.2 Pitch and Flank Angle. The pitch and flank angle are the same as the corresponding dimensions of the taper pipe thread described in Section 3.

6.1.3 Diameter of Thread. The basic pitch diameter for both the external and internal straight pipe threads is equal to the pitch diameter of the American National Standard Taper Pipe Thread at the gaging notch (dimension E_1 of Table 2), which is the same as at the large end of the internal taper pipe thread.

6.2 Free-Fitting Mechanical Joints for Fixtures, NPSM

Pipe is often used for special applications where there are no internal pressures. Where straight thread joints are required for mechanical assemblies, straight pipe threads are often found more suited or convenient.

The dimensions of these threads, as given in Table 6, are for pipe thread connections where reasonably close fit of the mating parts is desired.

6.3 Loose-Fitting Mechanical Joints With Locknuts, NPSL

The American National Standard External Locknut thread is designed to produce a pipe thread having the largest diameter that it is possible to cut on standard pipe. Ordinarily Straight Internal Threads are used with these Straight External Threads, providing a loose fit. The dimensions of these threads are given in Table 7. It will be noted that the maximum major diameter of the external thread is slightly greater than the nominal outside diameter of the pipe. The normal manufacturer's variation in pipe diameter provides for this increase.

One application of a taper pipe thread in combination with a locknut thread which has been in use for some time is that shown in Table 7. It consists of the nipple threaded joint used to connect standpipes with the floor or wall of a water supply tank.

Gaging information for these threads is given in Section 7.

Copyright ASME International
Provided by IHS under license with ASME
No reproduction or networking permitted without license from IHS

Not for Resale

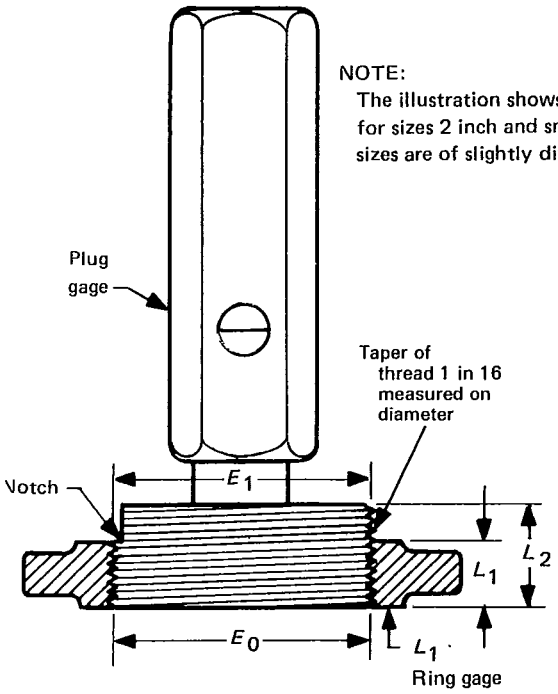

FIG. 4 NPT STANDARD TAPER PIPE THREAD PLUG AND RING GAGES

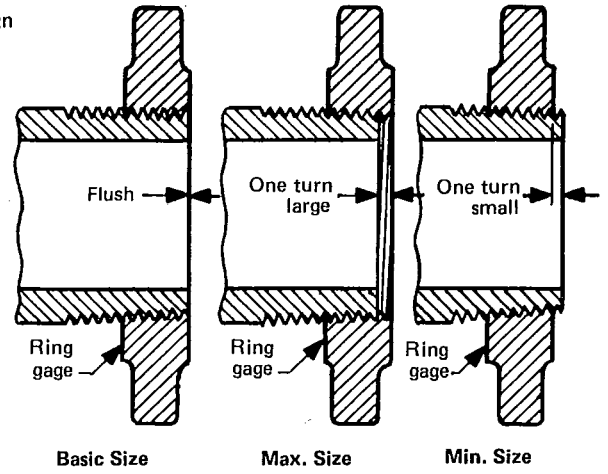

FIG. 6 GAGING EXTERNAL TAPER THREADS WITH RING GAGE

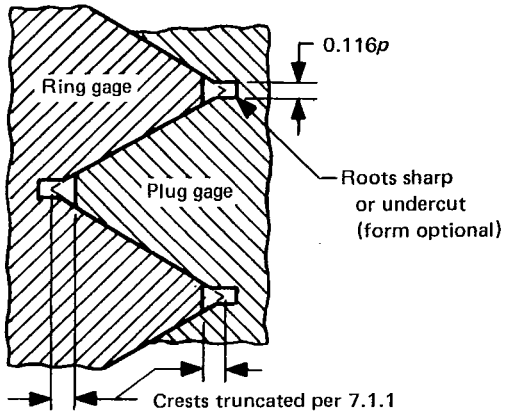

Roots must clear 0.0381p flat

FIG. 5 SUGGESTED FORM OF GAGE THREAD

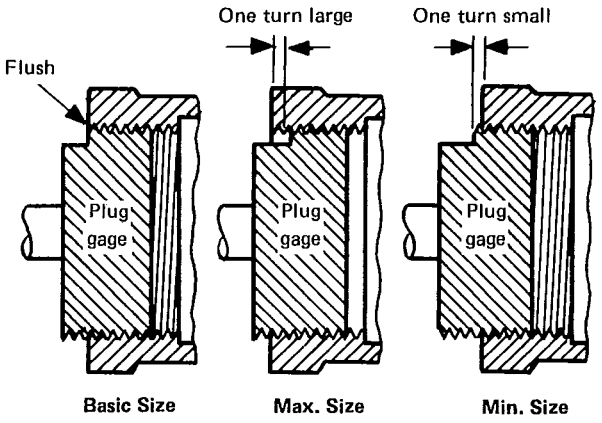

FIG. 7 GAGING INTERNAL TAPER THREADS

Copyright ASME International
Provided by IHS under license with ASME
No reproduction or networking permitted without license from IHS

Not for Resale

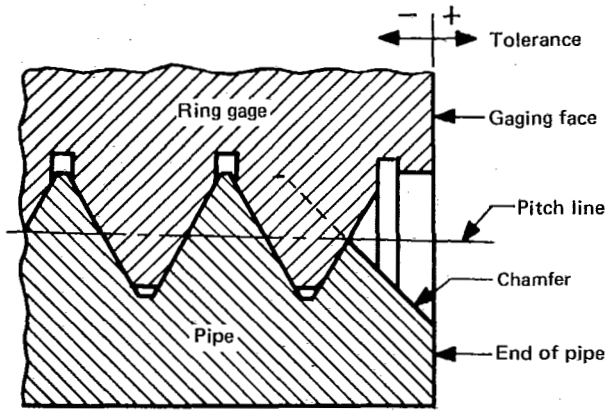

(A) Enlarged view showing chamfered external thread of basic size

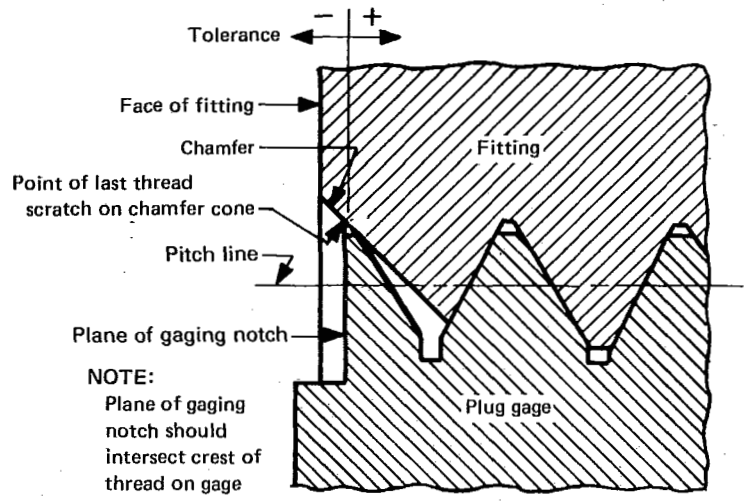

(B) Enlarged view showing chamfered internal thread of basic size with chamfer exceeding the major diameter

GENERAL NOTE:
The chamfer illustrated is at 45 deg. angle and is approximately ½ pitch in depth. However, these details are not requirements and are given only for information on the illustration shown. The chamfered portion of thread and the full chamfer cone are indicated by dotted lines.

The reference point for the internal product thread is the starting end of the fitting, providing the chamfer does not exceed the major diameter of the internal thread. When a chamfer on the product thread exceeds this limit, the reference point becomes the last thread scratch on the chamfer cone, as illustrated. Allowance must be made for depth of counterbore on counterbored fittings.

FIG. 8 GAGING OF CHAMFERED THREADS
(See 8.4)

Copyright ASME International
Provided by IHS under license with ASME
No reproduction or networking permitted without license from IHS

Not for Resale

6.4 Loose-Fitting Mechanical Joints for Hose Couplings, NPSH

Hose coupling joints are ordinarily made with straight internal and external loose-fitting threads. There are several standards of hose threads having various diameters and pitches, one of which is based on the American National Standard Pipe Thread. By the use of this thread series, it is possible to join small hose couplings in sizes ½ to 4, inclusive, to ends of standard pipe having American National Standard External Pipe Threads, using a gasket to seal the joint. For dimensions and tolerances, see ANSI B2.4.

7 GAGES AND GAGE TOLERANCES FOR AMERICAN NATIONAL STANDARD PIPE THREADS

7.1 Design of Gages

Gages for American National Standard Pipe Threads provide a functional check and are of the standard type as described below. Gages should conform to the designs recommended in ANSI Standard B47.1, Gage Blanks.

7.1.1 Standard Type Gages. A set of standard or basic type gages consists of a taper-threaded plug gage and a taper-threaded ring gage. See Figs. 4 and 5. The plug gages are made to dimensions given in Table 8 with a gaging notch located a distance L_1 from the small end. The L_1 ring gage has a length equal to dimension L_1. The roots of the threads on these gages shall clear $0.0381p$ width. A sharp V or undercut clearance is acceptable. The crests are to be truncated an amount equal to $0.140p$ for 27 threads per inch (tpi), $0.109p$ for 18 tpi, and $0.100p$ for 14 tpi, 11-1/2 tpi and 8 tpi threads (see Fig. 5). In locating the basic gaging notch, the plane of the notch should intersect the crest of the gage thread.

The ring gage shall be fitted to the plug so that, when assembled handtight, the gaging notch of the plug gage will be flush with the large end face of the ring gage within tolerances as given in Table 9.

Partial end threads shall be removed on both ends of the ring gage and on the small end of the plug gage to full-form profile in order to avoid possible seating error from bent or malformed feathered edge.

7.1.2 Marking of Gages. Each gage shall be marked so as to indicate clearly the nominal size of pipe, threads per inch, and the proper thread series designation as given in the respective section of this Standard.

7.2 Classes of Gages

Gages of the following types may be used to completely cover gage requirements:

(*a*) master gages used to check working gages.

(*b*) working gages used to check threads during manufacture and for conformance inspection.

7.2.1 Master Gages. The set of master gages consists of an L_1 taper threaded plug gage and an L_1 taper threaded ring gage (see Figs. 4 and 5). The plug gage is made to dimensions specified in Table 8. It is constructed of hardened steel with a gaging notch located a distance L_1 (Table 2) from the small end. The ring gage has a length equal to dimension L_1 specified in Table 8. This ring is fitted to its mating plug - seating flush at the notch within ± 0.002 in. for sizes 1/16 through 2, within ± 0.003 in. for sizes 2-1/2 through 12, and within ± 0.005 in. for sizes 14 and larger. The roots of the threads on these ring gages shall clear a $0.0381p$ flat or may be undercut beyond a sharp V. The crests of the plug and ring gage are truncated $0.100p$. The set of master gages is used for checking working gages (see 7.3.2). A supplementary check by optical means should be made of flank angle and form.

CAUTION: It should be understood that only a specifically matched set of masters (L_1 plug and L_1 ring) can be expected to mate with each other within the tolerance specified. There are many characteristics or deviations in gage elements that may combine to cause a significant standoff difference between master gages which are not specifically matched.

7.2.2 Working Gages. Each set of working gages consists of an L_1 taper threaded plug gage and an L_1 taper threaded ring gage and is used for checking the product. These gages are made of hardened steel or equivalent material to dimensions given in Table 8. (See 7.3.2 for tolerance.) In locating the basic notch of the plug gage the plane of the notch should intersect the crest of the thread.

It is to be noted that these gages are truncated at the crest so that they bear only on the flanks of the thread. Thus, although they do not check the crest or root truncations specified in Table 1, they are a satisfactory functional check for the general run of product. When it is deemed necessary to determine

Copyright ASME International
Provided by IHS under license with ASME
No reproduction or networking permitted without license from IHS
Not for Resale

TABLE 8 BASIC DIMENSIONS OF THREADED PLUG AND RING GAGES FOR NATIONAL AMERICAN NATIONAL STANDARD TAPER PIPE THREADS, NPT

Nominal Pipe Size	O.D. of Pipe (D)	Threads/in. (n)	Pitch (p)	Major Diameters of Plug Gages			Pitch Diameters of Plug and Ring Gages			Minor Diameters of Ring Gages		Increase in Diam./Thread (0.0625/n)	Thickness of Ring (L_1)
				At Small End (E_0) Plane	At Gaging Notch (E_1) Plane	At Large End (E_2) Plane	At Small End (E_0)	At Gaging Notch (E_1)	At Large End, Plug Gage (E_2)	At Small End, (E_0) Plane	At Gaging Notch (E_1) Plane		
1	2	3	4	5	6	7	8	9	10	11	12	13	14
1/16	0.3125	27	0.03704	0.29289	0.30289	0.30921	0.27118	0.28118	0.28750	0.24947	0.25947	0.00231	0.160
1/8	0.405	27	0.03704	0.38522	0.39531	0.40171	0.36351	0.37360	0.38000	0.34180	0.35189	0.00231	0.1615
1/4	0.540	18	0.05556	0.51339	0.52763	0.53850	0.47739	0.49163	0.50250	0.44139	0.45563	0.00347	0.2278
3/8	0.675	18	0.05556	0.64801	0.66301	0.67350	0.61201	0.62701	0.63750	0.57601	0.59101	0.00347	0.240
1/2	0.840	14	0.07143	0.80600	0.82600	0.83936	0.75843	0.77843	0.79179	0.71086	0.73086	0.00446	0.320
3/4	1.050	14	0.07143	1.01525	1.03644	1.04936	0.96768	0.98887	1.00179	0.92011	0.94129	0.00446	0.339
1	1.315	11.5	0.08696	1.27154	1.29654	1.31422	1.21363	1.23863	1.25630	1.15572	1.18072	0.00543	0.400
1 1/4	1.660	11.5	0.08696	1.61504	1.64129	1.65922	1.55713	1.58338	1.60130	1.49922	1.52547	0.00543	0.420
1 1/2	1.900	11.5	0.08696	1.85400	1.88025	1.89922	1.79609	1.82234	1.84130	1.73817	1.76442	0.00543	0.420
2	2.375	11.5	0.08696	2.32693	2.35418	2.37422	2.26902	2.29627	2.31630	2.21111	2.23836	0.00543	0.436
2 1/2	2.875	8	0.12500	2.80278	2.84541	2.87388	2.71953	2.76216	2.79062	2.63628	2.67891	0.00781	0.682
3	3.500	8	0.12500	3.42388	3.47175	3.49888	3.34062	3.38850	3.41562	3.25737	3.30525	0.00781	0.766
3 1/2	4.000	8	0.12500	3.92075	3.97207	3.99888	3.83750	3.88881	3.91562	3.75425	3.80556	0.00781	0.821
4	4.500	8	0.12500	4.41762	4.47038	4.49888	4.33438	4.38712	4.41562	4.25112	4.30387	0.00781	0.844
5	5.563	8	0.12500	5.47398	5.53255	5.56188	5.39073	5.44929	5.47862	5.30748	5.36604	0.00781	0.937
6	6.625	8	0.12500	6.52935	6.58922	6.62388	6.44609	6.50597	6.54062	6.36284	6.42272	0.00781	0.958
8	8.625	8	0.12500	8.51685	8.58328	8.62388	8.43359	8.50003	8.54062	8.35034	8.41678	0.00781	1.063
10	10.750	8	0.12500	10.62857	10.70419	10.74888	10.54531	10.62094	10.66562	10.46206	10.53768	0.00781	1.210
12	12.750	8	0.12500	12.61607	12.70107	12.74888	12.53281	12.61781	12.66562	12.44956	12.53456	0.00781	1.360
14 O.D.	14.000	8	0.12500	13.85825	13.95588	13.99888	13.77500	13.87262	13.91562	13.69175	13.78937	0.00781	1.562
16 O.D.	16.000	8	0.12500	15.84575	15.95900	15.99888	15.76250	15.87575	15.91562	15.67925	15.79250	0.00781	1.812
18 O.D.	18.000	8	0.12500	17.83325	17.95825	17.99888	17.75000	17.87500	17.91562	17.66675	17.79175	0.00781	2.000
20 O.D.	20.000	8	0.12500	19.82075	19.95357	19.99888	19.73750	19.87031	19.91562	19.65425	19.78706	0.00781	2.125
24 O.D.	24.000	8	0.12500	23.79575	23.94419	23.99888	23.71250	23.86094	23.91562	23.62925	23.77768	0.00781	2.375

GENERAL NOTE: Gage blanks shall conform to dimensions given in ANSI B47.1. The major diameters of the plug gages and the minor diameters of the ring gages are based upon the truncations specified in 7.1.1.

Copyright ASME International
Provided by IHS under license with ASME
No reproduction or networking permitted without license from IHS
Not for Resale

whether or not such truncations are within the limits specified, or particularly to see that maximum truncation is not exceeded, it is necessary to make further inspection. For this inspection, optics or optical projection is suggested.

7.3 Gage Tolerances

In the manufacture of gages, variations from basic dimensions are unavoidable. Furthermore, gages will wear in use. In order to fix the maximum allowable variations of gages, tolerances have been established. See Table 9 and 7.3.2.

7.3.1 Master Gage Tolerances. The set of master gages should be made to the basic dimensions as accurately as possible, but in no case shall the cumulative deviation exceed one-half of the total cumulative tolerance specified in cols. 13 and 14 of Table 9. Each master gage should be accompanied by a record of the measurements of all elements of the thread and the standoff of master plug to master ring (large end of ring gage to basic notch of plug gage).

7.3.2 Working Gage Tolerances. All gages applied to the product thread, whether in manufacture or inspection, are designated as working gages. All working gages should be made to the basic dimensions specified in Table 8 and within tolerances specified in Table 9. The maximum wear on a working gage shall not be more than the equivalent of one-quarter turn from its original dimensions.

7.4 Relation of Lead and Angle Deviations to Pitch Diameter Tolerances of Gages

When it is necessary to compute from measurements the decimal part of a turn that a gage varies from the basic dimensions, Tables 10 and 11 should be used. Table 10 gives the correction in diameter for angle deviations and Table 11 gives the correction in diameter for lead deviations. These corrections are always added to the pitch diameter in the case of external threads and subtracted in the case of internal threads regardless of whether the lead or angle deviations are either plus or minus.

The diameter equivalent for lead and angle deviations plus the pitch diameter deviation multiplied by 16 gives the longitudinal deviation from basic at the gaging notch. This longitudinal deviation divided by the pitch equals the decimal part of a turn that the gage varies from basic at the gaging notch.

8 GAGING OF TAPER PIPE THREADS

8.1 Gaging External Taper Threads

In gaging external taper threads, the L_1 ring gage, Fig. 6, is screwed handtight on the pipe or external thread. The thread is within the permissible tolerance when the gaging face of the working ring gage is not more than one turn, large or small, from being flush with the end of the thread, as indicated in Fig. 6.

8.2 Gaging Internal Taper Threads

In gaging internal taper threads, the L_1 plug gage, Fig. 4, is screwed handtight into the fitting or coupling. The thread is within the permissible tolerance when the gaging notch of the working plug gage is not more than 1 turn, large or small, from being flush with the end of the thread, as indicated in Fig. 7.

8.3 Gaging Practice

8.3.1 Precautions. In gaging pipe threads it is common practice to tap or rap the part to assure proper seating of the gage in or on the product thread. However, it is first necessary to clean both the gage and the product threads so that they are free of chips, burrs, abrasives, or other foreign materials.

8.3.2 Supplemental Gaging. Gaging of both internal and external threads by use of the L_1 plug and ring gages, illustrated by Figs. 6 and 7, serves to assure conformance to the L_1 elements of the design dimensions. However, conformance to this Standard requires that all basic design dimensions be met within applicable tolerances including extension of the thread elements to provide for wrench-tight make-up. Therefore, in controlling manufacturing practices or as otherwise required, additional methods of measuring or gaging may be employed to supplement L_1 gaging.

8.4 Gaging Chamfered, Countersunk, or Recessed Threads

The reference point for gaging internal product threads depends upon the chamfer diameter. When the internal chamfer diameter exceeds the major diameter of the internal thread, the reference point is the last thread scratch on the chamfer cone. See Fig. 8B. Otherwise, when the internal chamfer diameter does not exceed the major diameter of the internal thread, the reference point is the end of the

Copyright ASME International
Provided by IHS under license with ASME
No reproduction or networking permitted without license from IHS

Not for Resale

TABLE 9 TOLERANCES FOR AMERICAN NATIONAL STANDARD WORKING TAPER PIPE THREAD PLUG AND RING GAGES, NPT

Nominal Pipe Size	O.D. of Pipe, (*D*)	Threads/ in.	Tolerance on Pitch Diam.[1] (±)	Tolerance on Lead[2,4]		Tolerance on Half Angle,[3] Minutes		Tolerance on Taper[4,5]		Tolerance on Major Diam.	Tolerance on Minor Diam.	Total Cumulative Tolerances on Pitch Diam.		Standoff between Plug and Ring Gages at Gaging Notch for Dimensions at Opposite Extreme Tolerance Limits[6]
				Plugs	Rings	Plugs (±)	Rings (±)	Plugs (+)	Rings (−)	Plugs (−)	Rings (+)	Plugs	Rings	
1	2	3	4	5	6	7	8	9	10	11	12	13	14	15
1/16	0.3125	27	0.0002	0.0002	0.0003	15	20	0.0003	0.0006	0.0004	0.0004	0.00080	0.00118	0.032
1/8	0.405	27	0.0002	0.0002	0.0003	15	20	0.0003	0.0006	0.0004	0.0004	0.00080	0.00118	0.032
1/4	0.540	18	0.0002	0.0002	0.0003	15	20	0.0004	0.0007	0.0006	0.0006	0.00092	0.00134	0.036
3/8	0.675	18	0.0002	0.0002	0.0003	15	20	0.0004	0.0007	0.0006	0.0006	0.00092	0.00134	0.036
1/2	0.840	14	0.0003	0.0002	0.0003	10	15	0.0006	0.0009	0.0010	0.0010	0.00097	0.00142	0.038
3/4	1.050	14	0.0003	0.0002	0.0003	10	15	0.0006	0.0009	0.0010	0.0010	0.00097	0.00142	0.038
1	1.315	11.5	0.0003	0.0003	0.0004	10	15	0.0008	0.0012	0.0010	0.0010	0.00121	0.00170	0.047
1 1/4	1.660	11.5	0.0003	0.0003	0.0004	10	15	0.0008	0.0012	0.0010	0.0010	0.00121	0.00170	0.047
1 1/2	1.900	11.5	0.0003	0.0003	0.0004	10	15	0.0008	0.0012	0.0010	0.0010	0.00121	0.00170	0.047
2	2.375	11.5	0.0003	0.0003	0.0004	10	15	0.0008	0.0012	0.0010	0.0010	0.00121	0.00170	0.047
2 1/2	2.875	8	0.0005	0.0004	0.0005	7	10	0.0010	0.0014	0.0016	0.0016	0.00158	0.00211	0.059
3	3.500	8	0.0005	0.0004	0.0005	7	10	0.0010	0.0014	0.0016	0.0016	0.00158	0.00211	0.059
3 1/2	4.000	8	0.0005	0.0004	0.0005	7	10	0.0010	0.0014	0.0016	0.0016	0.00158	0.00211	0.059
4	4.500	8	0.0005	0.0004	0.0005	7	10	0.0010	0.0014	0.0016	0.0016	0.00158	0.00211	0.059
5	5.563	8	0.0005	0.0004	0.0005	7	10	0.0010	0.0014	0.0016	0.0016	0.00158	0.00211	0.059
6	6.625	8	0.0005	0.0004	0.0005	7	10	0.0010	0.0014	0.0016	0.0016	0.00158	0.00211	0.059
8	8.625	8	0.0005	0.0004	0.0005	7	10	0.0010	0.0014	0.0020	0.0020	0.00158	0.00211	0.059
10	10.750	8	0.0005	0.0004	0.0005	7	10	0.0010	0.0014	0.0020	0.0020	0.00158	0.00211	0.059
12	12.750	8	0.0005	0.0004	0.0005	7	10	0.0010	0.0014	0.0020	0.0020	0.00158	0.00211	0.059
14 O.D.	14.000	8	0.0008	0.0005	0.0006	7	10	0.0010	0.0014	0.0030	0.0030	0.00206	0.00271	0.076
16 O.D.	16.000	8	0.0008	0.0005	0.0006	7	10	0.0010	0.0014	0.0030	0.0030	0.00206	0.00271	0.076
18 O.D.	18.000	8	0.0008	0.0005	0.0006	7	10	0.0010	0.0014	0.0030	0.0030	0.00206	0.00271	0.076
20 O.D.	20.000	8	0.0008	0.0005	0.0006	7	10	0.0010	0.0014	0.0030	0.0030	0.00206	0.00271	0.076
24 O.D.	24.000	8	0.0008	0.0005	0.0006	7	10	0.0010	0.0014	0.0020	0.0020	0.00206	0.00271	0.076

GENERAL NOTES:

(a) The large end of the master ring gage shall be flush with the gaging notch of its master plug when assembled handtight within ± 0.002 for sizes 1/16 to 2 inclusive, within ± 0.003 for sizes 2 1/2 to 12, inclusive, and within ± 0.005 for sizes 14 and larger.

(b) The tolerances for the length L_1 from small end to gaging notch of the plug gaged (Fig. 4) shall be + 0.000 and − 0.001 for sizes 1/16 to 2, inclusive, and + 0.000 and − 0.002 for sizes 2 1/2 and larger.

(c) The tolerances for the over-all thread length L_2 of the plug gage (Fig. 4) shall be + 0.050 and − 0.000 for all sizes.

(d) Tolerances for the thickness L_1 of the ring gage (Fig. 4) shall be − 0.000 and + 0.001 for sizes 1/16 to 2, inclusive, and − 0.000 and + 0.002 for sizes 2 1/2 and larger.

NOTES:

(1) To be measured at the gaging notch of plug gage.

(2) Allowable variation in lead between any two threads in L_1 length of gage (Fig. 4).

(3) In solving for the correction in diameter for angle deviations, the average deviation in half angle for the two sides of thread regardless of their signs should be taken.

(4) The lead and taper on plug and ring gages shall be measured along the pitch line omitting the imperfect threads at each end.

(5) Allowable variation in taper in L_1 length of gage (Fig. 4).

(6) Maximum possible interchange standoff, any ring against any plug other than its master plug, may occur when taper deviations are zero and all other dimensions are at opposite extreme tolerance limits. Average standoff should be well within these maximum limits.

Copyright ASME International
Provided by IHS under license with ASME
No reproduction or networking permitted without license from IHS
Not for Resale

TABLE 10 DIAMETER EQUIVALENT OF DEVIATION[1] IN HALF INCLUDED ANGLE OF THREAD FOR TOOLS AND GAGES[3]

Deviation[2] ($\delta\alpha$) Minutes	8 Threads/in.	11.5 Threads/in.	14 Threads/in.	18 Threads/in.	27 Threads/in.
1	2	3	4	5	6
1	0.00006	0.00004	0.00003	0.00002	0.00002
2	0.00011	0.00008	0.00006	0.00005	0.00003
3	0.00017	0.00012	0.00010	0.00007	0.00005
4	0.00022	0.00016	0.00013	0.00010	0.00007
5	0.00028	0.00019	0.00016	0.00012	0.00008
6	0.00034	0.00023	0.00019	0.00015	0.00010
7	0.00039	0.00027	0.00022	0.00017	0.00012
8	0.00045	0.00031	0.00026	0.00020	0.00013
9	0.00050	0.00035	0.00029	0.00022	0.00015
10	0.00056	0.00039	0.00032	0.00025	0.00017
11	0.00062	0.00043	0.00035	0.00027	0.00018
12	0.00067	0.00047	0.00038	0.00030	0.00020
13	0.00073	0.00051	0.00042	0.00032	0.00022
14	0.00078	0.00054	0.00045	0.00035	0.00023
15	0.00084	0.00058	0.00048	0.00037	0.00025
16	0.00089	0.00062	0.00051	0.00040	0.00027
17	0.00095	0.00066	0.00054	0.00042	0.00028
18	0.00101	0.00070	0.00058	0.00045	0.00030
19	0.00106	0.00074	0.00061	0.00047	0.00031
20	0.00112	0.00078	0.00064	0.00050	0.00033
21	0.00117	0.00082	0.00067	0.00052	0.00035
22	0.00123	0.00086	0.00070	0.00055	0.00036
23	0.00129	0.00089	0.00074	0.00057	0.00038
24	0.00134	0.00093	0.00077	0.00060	0.00040
25	0.00140	0.00097	0.00080	0.00062	0.00041
26	0.00145	0.00101	0.00083	0.00065	0.00043
27	0.00151	0.00105	0.00086	0.00067	0.00045
28	0.00157	0.00109	0.00089	0.00070	0.00046
29	0.00162	0.00113	0.00093	0.00072	0.00048
30	0.00168	0.00117	0.00096	0.00075	0.00050
45	0.00252	0.00175	0.00144	0.00112	0.00075
50	0.00336	0.00233	0.00192	0.00149	0.00099

GENERAL NOTE: Values given in inches at 68° F.

NOTES:

(1) In solving for the diameter equivalent of angle deviations the average deviation in half included angle for the two sides of the thread regardless of their signs should be taken.

(2) Diameter equivalent = $0.53812p \tan \delta\alpha$, where $\delta\alpha$ = deviation in half included angle of thread expressed in minutes.

(3) Table is based upon an NPT gage with $0.1p$ root/crest Truncations with equal half-angle deviations. For other gages with equal truncations, multiply by

$$\frac{0.866p - 2\,(\text{truncation})}{0.6667p}$$

Copyright ASME International
Provided by IHS under license with ASME
No reproduction or networking permitted without license from IHS

Not for Resale

TABLE 11 DIAMETER EQUIVALENT OF DEVIATION IN LEAD FOR TOOLS AND GAGES[1]

Deviation (δp)	0.00000	0.00001	0.00002	0.00003	0.00004	0.00005	0.00006	0.00007	0.00008	0.00009
1	2	3	4	5	6	7	8	9	10	11
0.00000	0.00000	0.00002	0.00003	0.00005	0.00007	0.00009	0.00010	0.00012	0.00014	0.00016
0.00010	0.00017	0.00019	0.00021	0.00023	0.00024	0.00026	0.00028	0.00029	0.00031	0.00033
0.00020	0.00035	0.00036	0.00038	0.00040	0.00042	0.00043	0.00045	0.00047	0.00048	0.00050
0.00030	0.00052	0.00054	0.00055	0.00057	0.00059	0.00061	0.00062	0.00064	0.00066	0.00068
0.00040	0.00069	0.00071	0.00073	0.00074	0.00076	0.00078	0.00080	0.00081	0.00083	0.00085
0.00050	0.00087	0.00088	0.00090	0.00092	0.00094	0.00095	0.00097	0.00099	0.00100	0.00102
0.00060	0.00104	0.00106	0.00107	0.00109	0.00111	0.00113	0.00114	0.00116	0.00118	0.00120
0.00070	0.00121	0.00123	0.00125	0.00126	0.00128	0.00130	0.00132	0.00133	0.00135	0.00137
0.00080	0.00139	0.00140	0.00142	0.00144	0.00145	0.00147	0.00149	0.00151	0.00152	0.00154
0.00090	0.00156	0.00158	0.00159	0.00161	0.00163	0.00165	0.00166	0.00168	0.00170	0.00171
0.00100	0.00173	0.00175	0.00177	0.00178	0.00180	0.00182	0.00184	0.00185	0.00187	0.00189
0.00110	0.00191	0.00192	0.00194	0.00196	0.00197	0.00199	0.00201	0.00203	0.00204	0.00206
0.00120	0.00208	0.00210	0.00211	0.00213	0.00215	0.00217	0.00218	0.00220	0.00222	0.00223
0.00130	0.00225	0.00227	0.00229	0.00230	0.00232	0.00234	0.00236	0.00237	0.00239	0.00241
0.00140	0.00242	0.00244	0.00246	0.00248	0.00249	0.00251	0.00253	0.00255	0.00256	0.00258
0.00150	0.00260	0.00262	0.00263	0.00265	0.00267	0.00268	0.00270	0.00272	0.00274	0.00275
0.00160	0.00277	0.00279	0.00281	0.00282	0.00284	0.00286	0.00288	0.00289	0.00291	0.00293
0.00170	0.00294	0.00296	0.00298	0.00300	0.00301	0.00303	0.00305	0.00307	0.00308	0.00310
0.00180	0.00312	0.00313	0.00315	0.00317	0.00319	0.00320	0.00322	0.00324	0.00326	0.00327
0.00190	0.00329	0.00331	0.00333	0.00334	0.00336	0.00338	0.00339	0.00341	0.00343	0.00345
0.00200	0.00346	0.00348	0.00350	0.00352	0.00353	0.00355	0.00357	0.00359	0.00360	0.00362

GENERAL NOTE: Values given in inches at 68°F.

NOTE:

(1) Diameter equivalent = $1.732\delta p$, where δp = deviation in lead between any two threads.

Copyright ASME International
Provided by IHS under license with ASME
No reproduction or networking permitted without license from IHS

Not for Resale

fitting. An allowance must be made for the depth of counterbore on counterbored fittings.

The reference point for gaging or measuring the length of external product threads is the end of the pipe.

8.4.1 Turns-Engagement Method of Gaging. The turns-engagement method of gaging taper threads with plug and ring pipe thread gages, determines that an adequate number of threads is available at hand engagement, thus avoiding possible complications resulting from gage chamfer and product chamfer. See Table 2, col. 7, for the basic number of turns in the absence of chamfers (e.g., 4.32 turns for 27 tpi), the applicable tolerance being plus or minus one turn (or limits 3.32 to 5.32 turns for 27 tpi).

9 GAGING OF STRAIGHT PIPE THREADS

9.1 Types of Gages

Gages to properly control the production of these straight threads should be either straight GO and HI (Internal) and GO and LO (External) gages or the regular American National Standard Taper Pipe Thread gages as indicated below.

9.1.1 Use of Straight and Taper Gages. Straight GO and HI/LO gages should be used for all types of threaded joints where both the external and internal threads are straight. Taper plug gages should be used for the internal threads of all types of mechanical joints where the external thread is tapered and the internal thread is straight. Taper plug gages used for this purpose should be checked periodically by direct measurement.

9.1.2 Gaging Pressure-tight Joints. Taper thread gages shall be used to gage straight internal pipe threads forming part of pressure-tight joints where the external thread is tapered.

The plane of the gaging notch on the American National Standard Taper Pipe Thread plug gage shall come flush with the end of the American National Standard Coupling Straight Pipe Thread (NPSC) (Table 4) or flush with the last thread scratch on the chamfer cone if chamfered with an internal chamfer diameter in excess of the major diameter of the internal thread (see Fig. 8B). A tolerance of one and one-half turns large or small to gage shall be allowed.

CAUTION: When using a tapered thread plug gage, nonuniformity of gage wear is a particular problem; therefore, taper plug gages used for this application should be checked by direct measurement of thread form and size in addition to checking against a master.

9.2 Gage Dimensions

The straight GO and HI plug gages and the straight GO and LO ring gages used for checking mechanical joint threads, Tables 6 and 7, shall be made to the pitch diameter limits specified in the product tables in accordance with standard practice for straight thread gages as outlined in ANSI B1.2, Gages and Gaging for Unified Screw Threads.

The minimum major diameter of the GO thread plug gage shall be equal to the minimum pitch diameter of the internal thread plus an amount equal to 0.75H (0.649519p). The maximum major diameter of the HI thread plug gage shall be equal to the maximum pitch diameter of the internal thread plus an amount equal to 0.50H (0.433013p).

The maximum minor diameter of the GO thread ring gage shall be equal to the maximum pitch diameter of the external thread minus an amount equal to 0.50H (0.433013p). The minimum minor diameter of the LO thread ring gage shall be equal to the minimum pitch diameter of the external thread minus an amount equal to 0.25H (0.216506p).

See ANSI B1.2 for further details and tolerances for these straight thread gages.

Copyright ASME International
Provided by IHS under license with ASME
No reproduction or networking permitted without license from IHS

Not for Resale

APPENDIX

(This Appendix is not part of American National Standard, Pipe Threads, General Purpose (Inch) ANSI/ASME B1.20.1-198x, but is included for information purposes only.)

Suggested Twist Drill Diameters for Drilled Hole Sizes for Pipe Threads

The drill diameters given in Table 1 are the diameters of the standard and stock drills which are the closest to the minimum minor diameters shown in Table 2, col. 24.

They represent the diameters of the holes which would be cut with a twist drill correctly ground when drilling a material without tearing or flow of metal. This is approximately the condition that exists when a correctly sharpened twist drill is cutting a hole in a homogeneous block of cast iron.

When flat drills are used, the width of the cutting edge may have to be adjusted to produce a hole of the required diameter.

When nonferrous metals and other similar materials are to be drilled and tapped, it may be found necessary to use a drill of slightly larger or smaller diameter to produce a hole of a size that will make it possible for the tap to cut an acceptable pipe thread with the required thread height.

It should be understood that this table of twist drill diameters is intended to help only the occasional user of drills in the application of this Standard. When internal pipe threads are produced in larger quantities in a particular type of material and with specially designed machinery it may be found to be more advantageous to use a drill size not given in the table, even one having a nonstandard diameter.

TABLE A1 SUGGESTED TWIST DRILL DIAMETERS (INCHES) FOR DRILLED HOLE SIZES FOR PIPE THREADS

Nom. Pipe Size	O.D. of Pipe (*D*)	Taper Thread		Straight Pipe Thread (NPSC)[2]
		With use of Reamer	Without use of Reamer	
1	2	3	4	5
1/16	0.3125	A 0.234[1]	C 0.242[1]	1/4 0.250[1]
1/8	0.405	21/64 0.328[1]	Q 0.332[1]	11/32 0.344[1]
1/4	0.540	27/64 0.422[1]	7/16 0.438[1]	7/16 0.438[1]
3/8	0.675	9/16 0.562[1]	9/16 0.562[1]	37/64 0.578[1]
1/2	0.840	11/16 0.688[1]	45/64 0.703[1]	23/32 0.719[1]
3/4	1.050	57/64 0.891[1]	29/32 0.906[1]	59/64 0.922[1]
1	1.315	1 1/8 1.125[1]	1 9/64 1.141[1]	1 5/32 1.156[1]
1 1/4	1.660	1 15/32 1.469	1 31/64 1.484	1 1/2 1.500
1 1/2	1.900	1 45/64 1.703	1 23/32 1.719	1 3/4 1.750
2	2.375	2 11/64 2.172	2 3/16 2.188	2 7/32 2.219
2 1/2	2.875	2 37/64 2.578	2 39/64 2.609	2 21/32 2.656

GENERAL NOTE: The use of twist drills of the diameters listed will not assure completely formed threads over the entire L_1 length.

NOTES:

(1) American National Standard twist drill sizes in accordance with ANSI B94.11, applicable to commercial threads only.

(2) Twist drill diameters for NPSM, NPSL and NPSH threads may be larger to suit the increased internal minor diameters established for these threads. Refer to Tables 6 and 7 in this Standard and Table 3 in ANSI B2.4, Hose Coupling Screw Threads.

Copyright ASME International
Provided by IHS under license with ASME
No reproduction or networking permitted without license from IHS
Not for Resale