AN AMERICAN NATIONAL STANDARD

ASME AG-1a–2004

ADDENDA

to

ASME AG-1–2003
CODE ON NUCLEAR AIR AND GAS TREATMENT

THE AMERICAN SOCIETY OF MECHANICAL ENGINEERS
Three Park Avenue • New York, NY 10016

Copyright ASME International
Provided by IHS under license with ASME
No reproduction or networking permitted without license from IHS
Not for Resale

Date of Issuance: September 30, 2005

ASME is the registered trademark of The American Society of Mechanical Engineers.

This code or standard was developed under procedures accredited as meeting the criteria for American National Standards. The Standards Committee that approved the code or standard was balanced to assure that individuals from competent and concerned interests have had an opportunity to participate. The proposed code or standard was made available for public review and comment that provides an opportunity for additional public input from industry, academia, regulatory agencies, and the public-at-large.

ASME does not "approve," "rate," or "endorse" any item, construction, proprietary device, or activity.

ASME does not take any position with respect to the validity of any patent rights asserted in connection with any items mentioned in this document, and does not undertake to insure anyone utilizing a standard against liability for infringement of any applicable letters patent, nor assumes any such liability. Users of a code or standard are expressly advised that determination of the validity of any such patent rights, and the risk of infringement of such rights, is entirely their own responsibility.

Participation by federal agency representative(s) or person(s) affiliated with industry is not to be interpreted as government or industry endorsement of this code or standard.

ASME accepts responsibility for only those interpretations of this document issued in accordance with the established ASME procedures and policies, which precludes the issuance of interpretations by individuals.

No part of this document may be reproduced in any form,
in an electronic retrieval system or otherwise,
without the prior written permission of the publisher.

The American Society of Mechanical Engineers
Three Park Avenue, New York, NY 10016-5990

Copyright © 2005 by
THE AMERICAN SOCIETY OF MECHANICAL ENGINEERS
All rights reserved
Printed in U.S.A.

--`,,```,,,,````-`-`,,`,,`,`,,`---

Copyright ASME International
Provided by IHS under license with ASME
No reproduction or networking permitted without license from IHS

Not for Resale

ASME AG-1a–2004

Following approval by the ASME Committee on Nuclear Air and Gas Treatment (CONAGT), and after public review, this ASME AG-1a–2004 was approved by the American National Standards Institute on May 12, 2004.

Addenda to the 2003 edition of ASME AG-1 are issued in the form of replacement pages. Revisions, additions, and deletions are incorporated directly into the affected pages. It is advisable, however, that this page, the Addenda title and copyright pages, and all replaced pages be retained for reference.

SUMMARY OF CHANGES

This is the first Addenda to be published to ASME AG-1-2003.

Replace or insert the pages listed. Changes listed below are identified by a margin note, **(a),** placed next to the affected area. The pages not listed are the reverse sides of the listed pages and contain no changes.

Page	*Location*	*Change*
vi–xii	Committee Roster	Updated to reflect Addenda
71, 72	AA-D-2210	Equations (2a), (3), (4), and (5) corrected by errata
78, 79	AA-D-3340	(1) Equations (36) and (37) corrected by errata (2) New Eq. (38) added
	AA-D-3350	(1) Equation (38) redesignated as Eq. (39) (2) Equation (39) corrected by errata and redesignated as Eq. (40) (3) Equations (40a) and (40b) redesignated as Eqs. (41a) and (41b), respectively
	AA-D-3370	Equations (41a) and (41b) redesignated as Eqs. (42a) and (42b), respectively
	AA-D-3400	(1) Equations (42a), (42b), and (42c) redesignated as Eqs. (43a), (43b), and (43c), respectively (2) Equation (42d) corrected by errata and redesignated as Eq. (43d)
246	RA-6210	Revised
247	RA-7100(a)	Revised
	RA-7200	Revised
	RA-7300	Revised
	RA-7400	Revised
	RA-7500	Second paragraph revised

--`,,```,,,,````-`-`,,`,,`,`,,`---
Copyright ASME International
Provided by IHS under license with ASME
No reproduction or networking permitted without license from IHS
Not for Resale

Page	*Location*	*Change*
265, 266	RA-I-1000	Second paragraph added
338–350	Section FB	Revised in its entirety by errata

NOTE: Interpretations for ASME AG-1a-2004 follow the last page of this Addenda.

Copyright ASME International
Provided by IHS under license with ASME
No reproduction or networking permitted without license from IHS
Not for Resale

FOREWORD (03)

In 1971, what is now the Committee on Nuclear Air and Gas Treatment was organized as ANSI N45.8 to develop standards for high reliability air cleaning equipment for nuclear facilities and corresponding tests to confirm performance of the equipment. Two standards, N509 and N510, were published in 1975 and 1976 and updated in 1980 and 1989.

In 1976, under the accredited organization rules, the Committee was reorganized as the ASME Committee on Nuclear Air and Gas Treatment. The scope of responsibility was broadened to include the development of codes and standards for design, fabrication, inspection, and testing of air cleaning and conditioning components and appurtenances, as well as air cleaning components used in engineering safety systems in nuclear facilities. The current assignment is to produce code documents rather than standards.

Although this Code is written for nuclear power and nuclear fuel cycle facilities, the design requirements of these documents may be referenced for the design, fabrication, inspection, and testing of ventilation air cleaning and air conditioning equipment for other types of facilities. The user, however, is cautioned to carefully review these Code requirements for applicability to specific applications other than nuclear power and nuclear fuel cycle facilities.

The user of the Code will note that metric equivalents of U.S. customary units appear throughout this issue of the Code. The values stated in U.S. customary units are to be regarded as the standard.

Membership on the committee, subcommittees, and subgroups includes nuclear steam supply system suppliers, operating owners, architect/engineers, members of the Nuclear Regulatory Commission, various manufacturers, and individuals with general interest. Only those individuals with demonstrated abilities in the specific areas involved are solicited as members. The balance of interest committee members is closely watched to ensure that all interests are represented.

The first Edition of this Code was approved by the American National Standards Institute on April 30, 1985, and issued on February 28, 1986. The second Edition was approved by ANSI on March 18, 1988. This sixth Edition was approved by ANSI on April 10, 2003.

Copyright ASME International
Provided by IHS under license with ASME
No reproduction or networking permitted without license from IHS
Not for Resale

(a)

ASME COMMITTEE ON NUCLEAR AIR AND GAS TREATMENT

(The following is the roster of the Committee at the time of approval of this Code.)

MAIN COMMITTEE

R. D. Porco, *Chair*
M. R. Hargan, *Vice Chair*
T. J. Vogan, *Vice Chair*
O. Martinez, *Secretary*

E. M. Banks, Nucon International, Inc.
R. R. Bellamy, U.S. Nuclear Regulatory Commission
J. R. Edwards, Flanders/CSC
M. W. First, Harvard School of Public Health
M. J. Fox, Engineered Environments, Inc.
C. E. Graves, NUCON International, Inc.
J. J. Hayes, Jr., U.S. Nuclear Regulatory Commission
J. R. Kriskovich, Vista Engineering
M. C. Patel, TXU Electric
M. E. Pest, APS
G. S. Petersen, Washington Group International, Inc.
R. D. Raheja, Sargent & Lundy Engineers
M. E. Saucier, SSM Industries, Inc.
W. J. Ter Kuile, Vokes, Ltd.
R. M. Van Becelaere, Ruskin Manufacturing Division
W. O. Wikoff, PSE&G
W. F. Williams, Jr., TXU Electric
R. Zavadoski, Defense Nuclear Facilities

EXECUTIVE COMMITTEE

M. R. Hargan, *Chair*
T. J. Vogan, *Chair*
R. D. Porco, *Vice Chair*
O. Martinez, *Secretary*

R. R. Bellamy, U.S. Nuclear Regulatory Commission
J. J. Hayes, Jr., U.S. Nuclear Regulatory Commission
J. R. Kriskovich, Vista Engineering
R. D. Raheja, Sargent & Lundy Engineers
M. E. Saucier, SSM Industries, Inc.
W. O. Wikoff, PSE&G
R. Zavadoski, Defense Nuclear Facilities

Copyright ASME International
Provided by IHS under license with ASME
No reproduction or networking permitted without license from IHS
Not for Resale

CONAGT Honorary Members

D. J. Gladden, Consultant
C. Golden, Consultant
L. J. Klaes, Consultant
W. H. Miller, Jr., Innogy America, LLC
S. C. Ornberg, Consultant
R. R. Weidler, Duke Power Co.

Special Working Group on Editorial Review

R. R. Bellamy, *Chair,* U.S. Nuclear Regulatory Commission
B. C. Elliott, Aerofin Corp.
M. W. First, Harvard School of Public Health
J. R. Hunt, NCS Corp.
C. G. Kramer, Parsons Power Group, Inc.
W. J. McAndrew, Kaiser Hill, Inc.
M. E. Saucier, SSM Industries, Inc.
A. Soma, Barnebey & Sutcliffe Corp.

SUBCOMMITTEE ON FILTRATION

J. J. Hayes, Jr., *Chair,* U.S. Nuclear Regulatory Commission
M. E. Pierce, *Vice Chair,* Hollingsworth & Vose
D. J. Adamson, WSRC
I. S. Boxall, Fairey Microfiltrex, Ltd.
W. H. Cambo, Lydall, Inc.
D. W. Crosby, Air Techniques International
B. Franklin, AAF International
J. Fretthold, Kaiser-Hill Co., Rocky Flats
G. Garcia, Bechtel National, Inc.
G. S. Grewal, Los Alamos National Laboratory
R. L. Heiden, U.S. Army Corps of Engineers
W. J. McAndrew, Kaiser Hill, Inc.
H. A. Mearns, ECBC
G. W. Moore, Flanders/CSC
G. G. Pyle, KAPL, Inc.
C. I. Ricketts, New Mexico State University
J. W. Slawski, U.S. Department of Energy
A. Stillo, Camfil Farr
W. J. Ter Kuile, Vokes, Ltd.
L. D. Weber, Techmark Corp.

--`,,```,,,,````-`-`,,`,,`,`,,`---

Copyright ASME International
Provided by IHS under license with ASME
No reproduction or networking permitted without license from IHS

Not for Resale

Subgroup on Gas Process Treatment Equipment

J. Kriskovich, *Chair,* Vista Engineering
D. G. Adams, First Energy Corp.
M. J. Fox, Engineered Environments, Inc.
M. R. Hargan, Hargan Engineering

SUBCOMMITTEE ON ADSORPTION

R. R. Bellamy, U.S. Nuclear Regulatory Commission
M. A. Doersam, Ellis & Watts International, Inc.
J. R. Edwards, Flanders/CSC
C. E. Graves, NUCON International, Inc.
R. W. Morrison, Guild & Associates, Inc.
M. C. Patel, TXU Electric
B. C. Seam, Bechtel National, Inc.
A. Soma, Barnebey & Sutcliffe Corp.

SUBCOMMITTEE ON COMMON EQUIPMENT

M. E. Saucier, *Chair,* SSM Industries, Inc.
L. T. Ahlman, Consultant
D. A. Brock, Southern Company Services, Inc.
G. P. Brotherson, Consultant
R. R. Campbell, Tennessee Valley Authority
S. M. Chan, Bechtel Power Corp.
D. L. Davenport, EMC Engineering, Inc.
M. A. Doersam, Ellis & Watts International, Inc.
R. L. Furniss, Howden Buffalo, Inc.
C. G. Kramer, Parsons Power Group, Inc.
R. A. Lichtenwald, Reed National Air Products Group
G. W. Moore, Flanders/CSC
P. S. Parthasarathy, Bechtel National, Inc.
W. A. Pysh, Exitec Corp.
D. R. Ramos, Parsons Power Group, Inc.
J. B. Roberts, Westinghouse Savannah River Co.
A. Soma, Barnebey & Sutcliffe Corp.
R. M. Van Becelaere, Ruskin Manufacturing Division

Copyright ASME International
Provided by IHS under license with ASME
No reproduction or networking permitted without license from IHS
Not for Resale

SUBCOMMITTEE ON VENTILATION AIR CONDITIONING EQUIPMENT

M. R. Hargan, *Chair,* Hargan Engineering
G. S. Petersen, *Vice Chair,* Washington Group International, Inc.
D. G. Adams, First Energy Corp.
L. E. Anderlini, Fluor Hanford, Inc.
P. H. Burwinkel, Southern Nuclear
W. Clemenson, Consultant
B. C. Elliott, Aerofin Corp.
M. J. Fox, Engineered Environments, Inc.
D. Ghosh, Southern Company Services
R. Knoche, Consultant

SUBCOMMITTEE ON GENERAL SUPPORT SERVICES

R. D. Raheja, *Chair,* Sargent & Lundy Engineers
G. V. Chapman, Trentec, Inc.
B. Franklin, AAF International
T. J. Vogan, Sargent & Lundy Engineers
W. F. Williams, Jr., TXU Electric

SUBCOMMITTEE ON FIELD TESTING PROCEDURE

W. O. Wikoff, *Chair,* PSE&G-Nuclear
J. R. Hunt, *Vice Chair,* NCS Corp.
E. M. Banks, NUCON International, Inc.
D. W. Crosby, Air Techniques International
M. W. First, Harvard School of Public Health
L. Leonard, Leonard Designs
G. Miller, Lawrence Livermore National Laboratory
M. E. Pest, APS
J. W. Slawski, U.S. Department of Energy
R. R. Sommer II, NUCON International, Inc.
R. Zavadoski, Defense Nuclear Facilities

SUBCOMMITTEE ON TECHNOLOGY

R. Zavadoski, *Chair,* Defense Nuclear Facilities
E. M. Banks, NUCON International, Inc.
M. W. First, Harvard School of Public Health
W. O. Wikoff, PSEG-Nuclear

Copyright ASME International
Provided by IHS under license with ASME
No reproduction or networking permitted without license from IHS
Not for Resale

--`,,```,,,,````-`-`,,`,,`,`,,`---

Copyright ASME International
Provided by IHS under license with ASME
No reproduction or networking permitted without license from IHS

Not for Resale

ARTICLE AA-D-2000
CIRCULAR DUCTWORK

AA-D-2100 INTRODUCTION

The major factor to consider in the design of circular ductwork is buckling. The following sections provide techniques for designing circular ductwork that can withstand various design loads.

AA-D-2200 ALLOWABLE DESIGN STRESSES: SERVICE LEVEL A

The maximum normal allowable stresses to be used in design for Service Level A load combinations given in Table SA-4212 shall not exceed the following stresses.

(a) AA-D-2210 AXIALLY LOADED COMPRESSION MEMBERS

Ducts subjected to axial loads can be designed so that the average axial compression stress, P/A, does not exceed the values presented below for the appropriate configuration. Both column buckling of the entire section and local buckling of the shell must be checked and the controlling allowable stress used in the design.

Equation (1a) illustrates combined column and local buckling for a circular cross section.
where

for $\sigma_e \leq \sigma_y/2$

$$\sigma_o = 0.521 \frac{\Pi^2 E}{(KL/r)^2} \quad (1a)$$

for $\sigma_e > \sigma_y/2$

$$\sigma_o = \frac{\sigma_y[1 - \sigma_y/4\sigma_e]\,[1 - (1 - R^2)\,(1 - \alpha)]}{\frac{5}{3} + \frac{3}{8}R - \frac{R^3}{8}} \quad (1b)$$

Column buckling:

where $D/t > 0.441\dfrac{E}{\sigma_y}$

For cylindrical sections, the general buckling expressions may be used [see Article AA-D-5000 (Yu 1985)].

For $KL/r < C_c$

$$\sigma_o = \left[0.522\ \sigma_y - \frac{(KL/r)^2 \sigma_y^2}{1494^2}\right] \quad (2a)$$

For $KL/r \geq C_c$

$$\sigma_o = \frac{151900}{(KL/r)^2} \quad (2b)$$

Local buckling:

For $D/t \leq 3300/\sigma_y$

$$\sigma_l = 0.60\sigma_y \quad (3)$$

For $3300/\sigma_y < D/t \leq 13000/\sigma_y$

$$\sigma_l = \frac{662}{D/t} + 0.399\ \sigma_y \quad (4)$$

Copyright ASME International
Provided by IHS under license with ASME
No reproduction or networking permitted without license from IHS
Not for Resale

For $D/t > 13000/\sigma_y$

$$\sigma_l = \frac{5860}{D/t} \quad (5)$$

where

α = area factor, $= \left(\frac{0.037}{D\sigma_y/tE} + 0.667\right) \leq 1.0$
D = outside duct diameter, in.
t = duct thickness, in.
$C_c = \sqrt{2\pi^2 E/\sigma_y}$
P = total axial load, kips
A = full, unreduced cross-sectional area of the duct, in.^{2}
σ_o = allowable compression stress for column buckling under axial loading, ksi
σ_l = allowable compression stress for local buckling under axial loading, ksi
E = modulus of elasticity, typically 29,500 ksi
K = effective length factor
L = unbraced length of member, in.
r = radius of gyration of the unreduced cross section, $\sqrt{I/A}$, in.
σ_e = elastic buckling stress $= \frac{\pi^2 E}{(KL/r)^2}$ ksi
σ_y = material yield stress, ksi
$R = \sqrt{(\sigma_y/\sigma_e)}$

AA-D-2220 CYLINDRICAL TUBULAR MEMBERS IN BENDING

The local-buckling behavior in the compression portion of a cylindrical tubular member subjected to a bending load is similar to the local-buckling behavior under axial compression. Therefore, eqs. (3), (4), and (5) of AA-D-2210 may be used to determine both local-buckling stresses due to axial compression as well as the onset of flexural buckling. According to published research [see Article AA-D-5000 (Gerard and Becker 1957)], this approach leads to a conservatism of about 30% in the case of flexural buckling. Section properties for stress calculations shall be based on the full section.

As an option, more accurate determination of the allowable bending stress for circular sections under bending moments alone can be found as follows for ductwork where $D/t \leq 0.441E/\sigma_y$. [See Article AA-D-5000 (*Specification for the Design of Cold-Formed Steel Structural Members* and Yu 1985)].

For $D/t \leq 0.070\ E/\sigma_y$

$$\sigma_a = 0.75\sigma_y \quad (6)$$

For $0.070\ E/\sigma_y < D/t \leq 0.319\ E/\sigma_y$

$$\sigma_a = \left[0.581 + 0.012\,\frac{(E/\sigma_y)}{D/t}\right]\sigma_y \quad (7)$$

For $0.319\ E/\sigma_y < D/t \leq 0.441\ E/\sigma_y$

$$\sigma_a = [0.196\ E/(D/t)] \quad (8)$$

where

σ_a = the allowable bending stress, ksi, based on the section modulus of the full, unreduced cross section

AA-D-2230 TORSION

The normal allowable shear stress, v_t, due to local buckling of a circular tubular member subjected to torsion shall not exceed the following [see Article AA-D-5000 (Schilling 1965)]:

$$v_t = 0.395aE\left(\frac{t}{R}\right)^{5/4}\left(\frac{R}{L}\right)^{1/2} \quad (9)$$

a = plasticity reduction factor $= 1.16\,\frac{E_s}{E}$

where

v_t = allowable shear stress due to torsion, ksi
E = modulus of elasticity, typically 29,500 ksi
E_s = secant modulus, ksi
R = outside duct radius, in.
t = duct plate thickness, in.
L = length of duct between supports, in.

The above equation is specifically for circular ducts with pinned ends; the critical buckling stress of a circular duct with clamped ends would be approximately 10% higher.

A method for calculating the plasticity reduction factor can be found in Article AA-D-5000 (Schilling 1965).

AA-D-2240 TRANSVERSE SHEAR

The allowable shear stress, σ_v, due to local buckling of a circular tubular member subjected to transverse shear shall not exceed the following:

Copyright ASME International
Provided by IHS under license with ASME
No reproduction or networking permitted without license from IHS
Not for Resale

ARTICLE AA-D-3000
RECTANGULAR DUCTWORK

AA-D-3100 INTRODUCTION

The methods presented in this article are suggested means of approach for analysis of rectangular ductwork.

The presence of compressive loads due to pressure or external forces requires that the ductwork and supports be designed properly for these loads. Buckling is the major concern in the design of rectangular ductwork and is the governing failure mode to be considered in design. The advantage of using rectangular ductwork is that it exhibits significant post-buckling strength. Plates possessing this behavior can accept significant amounts of load after they have exceeded the elastic buckling load.

The methods contained in this article, or other sources may be used. However, the requirements of Article SA-4000 must be met.

AA-D-3200 RECTANGULAR DUCT ANALYSIS

Properties of sections (cross-sectional area, moment of inertia, section modulus, radius of gyration, etc.) shall be determined in accordance with conventional methods of structural design. Properties shall be based on the full cross section of the members (or net sections where applicable) except where the use of a reduced cross section, or effective design width, is required by the provisions of the American Iron and Steel Institute's (AISI) Specification for the Design of Cold-Formed Steel Structural Members [see Article AA-D-5000 (*Specifications for the Design of Cold-Formed Steel Structural Members*)].

Use of AISI Specification provisions, however, with the specified maximum effective design widths and heights (w/t and h/t ratios where w and h are the width and height of the duct respectively), may result in duct thicknesses in excess of those commonly used for ductwork constructed to, or similar to, SMACNA specifications. Tests performed have demonstrated that ducts constructed to SMACNA specifications can adequately withstand specified dynamic loads. In effect, the following options may be utilized to calculate properties of ductwork sections.

(a) AISI specifications

(b) Testing as permitted by the AISI specification

(c) Finite element models using large displacement criteria

Option (c) can be used to extend the range of applicablility of the AISI equations and/or arrive at other suitable provisions in place of the AISI provisions. In addition, these models can be used to develop values for pressure-induced stresses not readily covered by the AISI provisions.

AA-D-3300 ALLOWABLE DESIGN STRESSES: SERVICE LEVEL A

The maximum normal allowable stresses to be used in design for Service Level A load combinations given in Table SA-4212 shall not exceed the following equations.

AA-D-3310 AXIALLY LOADED COMPRESSION MEMBERS

The average axial stress, P/A, in compression members shall not exceed the following values of σ_{a1} [see Article AA-D-5000 (*Specifications for the Design of Colf-Formed Steel Members* and Yu 1985)]:

for $\sigma_e \leq \dfrac{\sigma_y}{2}$

$$\sigma_{a1} = \frac{\sigma_e Q}{1.92} \tag{32}$$

Copyright ASME International
Provided by IHS under license with ASME
No reproduction or networking permitted without license from IHS
Not for Resale

for $\sigma_e > \sigma_{y/2}$

$$\sigma_{a1} = \frac{Q\sigma_y(1 - {}^{\sigma}y/4\sigma_e)}{1.92} \quad (33)$$

where

P = total load, kips
A = full, unreduced cross-sectional area of the member, in.^{2}
$\sigma_e = \dfrac{\pi^2 E}{(K/r)^2}$
σ_{a1} = allowable average compression stress under concentric loading, ksi
E = modulus of elasticity, typically, 29,500 ksi
K = effective length factor
L = unbraced length of member, in.
r = radius of gyration of full, unreduced cross section, in.
σ_y = yield strength of steel, ksi
Q = area reduction factor determined as: Ae/A — where Ae is the effective cross-sectional area computed per AA-D-3200 and A is the full or unreduced area of the cross section.

AA-D-3320 BASIC DESIGN STRESS

Stresses on the net section of tension members, and tension and compression on the extreme fiber of flexural members including membrane stresses shall not exceed the value σ_c specified below:

$$\sigma_c = 0.60\ \sigma_y \quad (34)$$

where

σ_y = the specified minimum yield strength, ksi

AA-D-3330 LOCAL PLATE BENDING

The allowable stress, σ, for local plate bending calculated on an elastic basis, plus membrane (tension), shall not exceed the following value:

$$\sigma = 0.90\ \sigma_y \quad (35)$$

(a) AA-D-3340 SHEAR STRESSES IN WEBS

The maximum average shear stress in kips per square inch on the gross area of a flat web shall not exceed:

$$h/t \le 164\sqrt{K_v\sigma_y} \quad (36)$$

$$\sigma_v = 0.4\sigma_y$$

$$164\sqrt{K_v\sigma_y} < h/t \le 237\sqrt{K_v\sigma_y} \quad (37)$$

$$\sigma_v = \frac{65.7\sqrt{K_v\sigma_y}}{h/t}$$

$$h/t > 237\sqrt{K_v\sigma_y} \quad (38)$$

$$\sigma_v = \frac{15600K_v}{(h/t)^2}$$

where

σ_v = allowable shear stress, ksi
σ_y = yield strength, ksi
t = base steel thickness of the web element, in.
h = clear distance between flanges measured along the plane of web, in.
K_v = shear buckling coefficient which for unreinforced webs equals 5.34. Values of K_v for other than unreinforced webs may be extracted from the AISI specification.

For h/t ratios exceeding 200, use of eq. (38) will result in very small values for allowable shear stress. Options discussed in AA-D-3200 may be used to increase the allowable shear stress.

AA-D-3350 COMBINED AXIAL AND BENDING STRESSES (a)

When subject to both axial compression and bending, members shall be proportioned to meet the following requirements [see Article AA-D-5000 (*Specifications for the Design of Cold-Formed Steel Structural Members*)].

for $f_a/\sigma_{a1} \le 0.15$

$$\frac{f_a}{\sigma_{a1}} + \frac{f_p}{\sigma_c} + \frac{f_{bx}}{\sigma_c} + \frac{f_{by}}{\sigma_c} \le 1.0 \quad (39)$$

for $f_a/\sigma_{a1} > 0.15$

$$\frac{f_a}{\sigma_{a1}} + \frac{f_p}{\sigma_c} + \frac{C_{mx}f_{bx}}{\left(1 - \dfrac{f_a}{F_{ex}^{1}}\right)\sigma_c} +$$

$$\frac{C_{my}f_{by}}{\left(1 - \dfrac{f_a}{F_{ey}^{1}}\right)\sigma_c} \le 1.0 \quad (40)$$

Copyright ASME International
Provided by IHS under license with ASME
No reproduction or networking permitted without license from IHS
Not for Resale

The subscripts x and y in the preceding equations indicate the axis of bending about which a particular stress or design property applies;
where
f_a = the applied compressive stress, ksi
f_p = the applied membrane stress due to pressure, ksi
$f_{bx,y}$ = the applied bending stress, ksi

Values for $C_{mx,y}$ may be obtained from the AISI specification.

$$F_{ex}^{1} = \frac{12\ \pi^2 E}{23\ (KL/r_x)^2} \tag{41a}$$

$$F_{ey}^{1} = \frac{12\ \pi^2 E}{23(KL/r_y)^2} \tag{41b}$$

AA-D-3360 STRESSES AT DUCT OPENINGS

Stress intensification and local stresses due to the presence of openings at duct walls for equipment installation, shall be evaluated to permit proper design of ductwork. Local reinforcing of the duct plate in the vicinity of the opening may be required.

(a) AA-D-3370 COMBINED BENDING AND SHEAR STRESSES IN WEBS

For unreinforced beam webs subjected to both bending and shear stresses, members shall be proportioned to meet the following requirements [see Article AA-D-5000 (La Boube and Yu 1978)]:

$$\left(\frac{f_{bw}}{\sigma_c}\right)^2 + \left(\frac{f_v}{\sigma_v}\right)^2 \le 1.0 \tag{42a}$$

For beam webs with transverse stiffeners satisfying the requirements of the AISI specification, members shall be proportioned to meet the following requirement:

$$0.6\left(\frac{f_{bw}}{\sigma_c}\right) + \frac{f_v}{\sigma_v} \le 1.3 \tag{42b}$$

when $f_{bw}/\sigma_c > 0.5$ and $f_v/\sigma_v > 0.7$
where
σ_c, σ_v = (defined previously)
f_{bw} = applied web bending stress, ksi
f_v = applied web shear stress, ksi

AA-D-3400 ALLOWABLE DESIGN STRESSES — SERVICE LEVEL B, C, OR D (a)

Members and assemblies subject to stresses produced by Service Level B, C, or D load combinations shown in Table SA-4212, may be proportioned for unit stresses 1.3 (Service Level B) or 1.6 (Service Levels C or D) times those specified in AA-D-3310 through AA-D-3340 for Service Level A load combinations. However, the increased stress allowables shall not exceed the following limits.

Axially loaded compression members:

$$\sigma_{a1}\ (\text{max.}) = 0.90\sigma_y \tag{43a}$$

Basic design stress:

$$\sigma_c\ (\text{max.}) = 0.9\sigma_y \tag{43b}$$

Local plate bending:

$$\sigma\ (\text{max.}) = 1.35\ \sigma_y \tag{43c}$$

Members subjected to shear:

$$\sigma\ (\text{max.}) = 0.90\sigma_y/\sqrt{3} \tag{43d}$$

AA-D-3500 STIFFENERS

AA-D-3510 STIFFENER DESIGN

Duct stiffeners are generally equal leg-angle shapes welded to the duct. Duct stiffeners shall be designed for loads resulting from duct internal pressure and duct plate local seismic excitation based on the tributary areas (Fig. AA-D-3510), as well as stiffener self-weight excitation and loads from equipment mounted directly on the duct plate. Other loads as specified in AA-4211, if present, shall also be considered (e.g., fluid momentum loads).

In Fig. AA-D-3510, the cross-hatched area represents the duct plate area tributary to the stiffener for load determination.
where
s = stiffener spacing
W or H = width or height of the duct respectively
ℓ' = $s/2$

In lieu of the trapezoidal tributary area, a rectangular tributary area may be conservatively used for simplification.

Copyright ASME International
Provided by IHS under license with ASME
No reproduction or networking permitted without license from IHS
Not for Resale

The capacity of duct stiffeners shall be determined in accordance with conventional methods of structural design.

AA-D-3520 STIFFENER SIZE AND SPACING

Duct stiffener size and spacing is contingent upon many parameters including duct plate thickness, duct pressure levels, seismic excitation levels and other loads as discussed in AA-D-3510.

It is recommended that as a starting point, the stiffener size and spacings given by SMACNA, which are primarily based on operational requirements, be used. Then, based on detailed duct analysis, if a closer stiffener spacing is required for a particular duct size, that spacing shall be used.

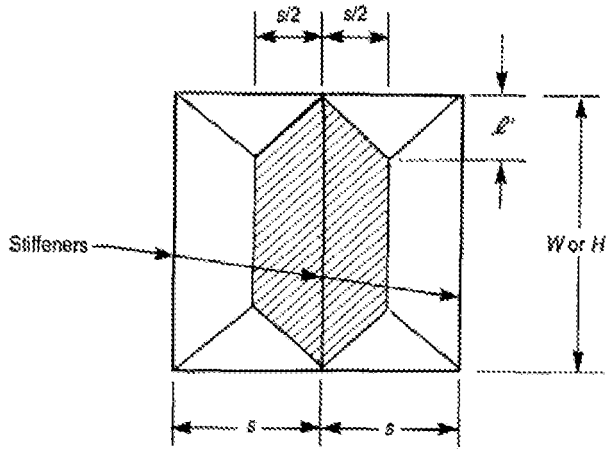

FIG. AA-D-3510

Copyright ASME International
Provided by IHS under license with ASME
No reproduction or networking permitted without license from IHS
Not for Resale

ARTICLE RA-6000
FABRICATION AND INSTALLATION

The requirements of Article AA-6000 shall apply except where expanded upon, modified, or otherwise exempted by the following.

RA-6100 WELDING AND BRAZING

RA-6110 WELDING AND BRAZING PERFORMED ON ASME CODE, SECTION III, PRESSURE-RETAINING COMPONENTS AND SUPPORTS

Welding and brazing performed on ASME Code, Section III, pressure-retaining components and Section III, Subsection NF, component supports shall be in accordance with Code Sections III and IX.

RA-6120 WELDING AND BRAZING PERFORMED ON ASME CODE, SECTION VIII, PRESSURE-RETAINING COMPONENTS

Welding and brazing performed on Section VIII pressure-retaining components shall be in accordance with Code Sections VIII and IX.

RA-6130 WELDING AND BRAZING OF NON-ASME BOILER AND PRESSURE VESSEL CODE PRESSURE RETAINING COMPONENTS AND SUPPORTS

RA-6131 General

RA-6131.1 Scope. The requirements of this paragraph apply to the preparation of welding and brazing procedure specifications, the qualification of welding and brazing procedures, welders, brazers, and welding operators for all types of manual and machine welding and brazing processes, and the workmanship, weld quality, brazing quality, and inspection of weldments and brazed joints produced during the manufacture of refrigeration equipment and components.

RA-6131.2 Responsibility. Each Manufacturer is responsible for the welding and brazing done by his organization and shall conduct the tests required by this subparagraph to qualify the procedures used in the construction of the weldments and brazed joints built under this Code, the performance of brazers, welders, and welding operators who apply these procedures, and the inspections required for workmanship and quality verification.

RA-6131.3 Base Metal. Base metals to be joined by welding or brazing shall be one of those listed in Article RA-3000 or a combination of the base metals listed in Article RA-3000, provided the requirements of RA-6131.2 are met.

RA-6132 Welding Procedures

Qualification of the Manufacturer's welding procedure specifications shall be in accordance with the requirements of this section and either the ASME Code, Section IX, or ANSI/AWS D1.1. Once a choice is made between Section IX or ANSI/AWS D1.1, all qualifications shall be consistent with that particular document.

RA-6133 Welder and Welding Operator Qualifications

RA-6133.1 Welder or welding operator qualification testing, or both, shall be performed in accordance with the ASME Code, Section IX, or ANSI/AWS D1.1. Welding of the qualification test specimens shall be performed in accordance with the Manufacturer's welding procedure specification qualified in accordance with RA-6132.

Copyright ASME International
Provided by IHS under license with ASME
No reproduction or networking permitted without license from IHS
Not for Resale

RA-6133.2 Once a choice is made between Section IX or ANSI/AWS D1.1, all qualification shall be consistent with that particular document.

RA-6200 CLEANING, FINISHING, AND COATING

(a) RA-6210 CLEANLINESS

Equipment internals shall be shop cleaned and be prepared for shipment per the requirements of ASME NQA-1. Cleanliness levels shall be the same as for the fluid systems of which the equipment is a part. The Design Specification shall identify the internal cleanliness levels of the associated fluid system. ASME NQA-1, Subpart 2.1, Class D cleanliness level shall apply.

RA-6220 SURFACE PREPARATION, FINISHING, AND COATING

Surface preparation, finishing, and coating of all equipment and components shall be in accordance with the design specification. In lieu of specified standards, cleaning, finishing, and coating shall be in accordance with the Manufacturer's written procedures. Surface preparation, finish, and coatings that are compatible with the environmental conditions stated in RA-4200(b) shall be provided in accordance with the design specification.

RA-6300 INSTALLATION

Installation and start-up of the equipment shall be performed under the Manufacturer's supervision and the requirements of AA-6600.

Copyright ASME International
Provided by IHS under license with ASME
No reproduction or networking permitted without license from IHS
Not for Resale

ARTICLE RA-7000
PACKAGING, SHIPPING, STORAGE, AND HANDLING

RA-7100 GENERAL REQUIREMENTS

(a) *(a)* Packaging, shipping, receiving, storage, and handling requirements shall be in accordance with AA-7000, ASME NQA-1 Requirement 13, ASME NQA-1, Subpart 2.2, and the specific requirements of this Article.

(b) When different levels of classification are required for different parts of the machine, the Manufacturer's procedures shall state how this will be addressed. If the Owner has specific requirements, the design specification shall so state.

(a) RA-7200 PACKAGING

All relevant equipment listed in ASME NQA-1, Subpart 2.2, paras. 302.2 and 302.3, shall meet the requirements of Packaging Levels B or C, as applicable, of ASME NQA-1, Subpart 2.2, para. 300. The balance of the machine shall meet the requirements of Packaging Level D of ASME NQA-1, Subpart 2.2, para. 300.

(a) RA-7300 SHIPPING

All relevant equipment listed in ASME NQA-1, Subpart 2.2, paras. 302.2 and 302.3, shall meet the requirements of Shipping Levels B or C, as applicable, of ASME NQA-1, Subpart 2.2, para. 400. The balance of the machine shall meet the requirements of Shipping Level D of ASME NQA-1, Subpart 2.2, para. 400.

(a) RA-7400 STORAGE

All relevant equipment listed in ASME NQA-1, Subpart 2.2, paras. 302.2 and 302.3, shall meet the requirements of Storage Levels B or C, as applicable, of ASME NQA-1, Subpart 2.2, para. 600. The balance of the machine shall meet the requirements of Storage Level D of ASME NQA-1, Subpart 2.2, para. 600.

RA-7500 HANDLING AND RIGGING (a)

Handling and rigging requirements shall be in accordance with AA-6610 and the following.

All relevent equipment listed in ASME NQA-1, Subpart 2.2, paras. 302.2 and 302.3, shall meet the requirements of Handling Levels B or C, as applicable, of ASME NQA-1, Subpart 2.2, para. 700. The balance of the machine shall meet the requirements of Handling Level D of ASME NQA-1, Subpart 2.2, para. 700.

RA-7600 ASSEMBLY, ERECTION, AND START-UP

RA-7610 FIELD-ASSEMBLED OR FIELD-ERECTED EQUIPMENT

Where equipment requires component assembly during final installation, the equipment manufacturer shall provide detailed written procedures for making the proper final assembly in accordance with AA-6620.

RA-7620 EXTERNAL CONNECTIONS AND SERVICES

(a) All external connections and services essential to the proper and safe operation of the refrigeration equipment supplied by the Owner or his designee shall be, as a minimum, governed by the same criteria as those specified as applicable to the refrigeration equipment itself.

(b) The equipment manufacturer shall be responsible for advising the Owner or his designee of connections

Copyright ASME International
Provided by IHS under license with ASME
No reproduction or networking permitted without license from IHS
Not for Resale

or services required for the proper and safe operation of the equipment as specified in the design specification.

RA-7630 START-UP AND PERIODIC TESTING

The equipment Manufacturer shall provide detailed start-up, inspection, and testing procedures with his equipment. Post-startup and periodic testing shall be the responsibility of the Owner.

The information required by RA-9200 shall be applied to a separate, corrosion-resistant namplate permanently attached to the machine by suitable means. The method of attachment shall not affect the structural or operational integrity of the machine.

Copyright ASME International
Provided by IHS under license with ASME
No reproduction or networking permitted without license from IHS
Not for Resale

MANDATORY APPENDIX RA-I
PERFORMANCE TESTING OF CHILLED WATER REFRIGERATION UNIT (CUSTOMARY)

ARTICLE RA-I-1000
GENERAL

(03)
(a)

The performance of the chilled water refrigeration equipment shall be certified by conducting a factory performance test as required by RA-5222. The performance test shall be conducted in accordance with ARI 550/590, Appendix A, with modifications to its paragraphs as outlined in RA-I-1100 through RA-I-1700.

This Appendix provides mandatory requirements for equipment to be installed in the United States or any other country that invokes United States regulatory administrative and quality assurance rules. This Appendix only provides guidance for countries that do not invoke these rules.

RA-I-1100 PARAGRAPH A4.1.1

The conditions to be used in this test shall be as shown in Table RA-I-1100.

RA-I-1200 EFFECT OF FOULING FACTORS

The fouling factors to be used for the evaporator and condenser shall be as given in the design specification. The method used for determining the adjusted suction and condensing temperatures at these fouling factors shall be the analytical method as described in ARI 450 and 480, using the Manufacturer's certified data. The adjusted condensing temperature increase and suction temperature decrease shall be calculated at the time of the test based on the actual cleaned tube condensing and suction temperatures (determined from averaging the three tests in accordance with paragraph 5.4.1 of ARI 450 and 480) and tabulated on Form RA-5 as shown in Table RA-I-1200.

RA-I-1300 PARAGRAPH A7.3.1

The general heat balance equation shall be as follows:

$$q(e_v) + q(\text{kW input}) = q(c)$$

and shall be tabulated on Form RA-5. See also Table RA-I-1300.

RA-I-1400 PARAGRAPH A7.3.3

The measured heat balance for the tests shall be within 5% of that specified for the full load condition and within $7\frac{1}{2}\%$ of the other test points.

RA-I-1500 PARAGRAPH A8.1.1

The capacity in tons shall be obtained by the following:

Copyright ASME International
Provided by IHS under license with ASME
No reproduction or networking permitted without license from IHS
Not for Resale

$$\text{tons} = (W)(t_e - t_d)/12{,}000$$

where

W = weight flow rate of chilled water (lb/hr)
= (gal/min) (62.4 lb/ft^3) (60 min/hr)/(7.48 gal/ft^3) where the specific heat of water is 1 Btu/lb–°F

t_e = temperature of water entering unit, °F

t_d = temperature of water leaving unit, °F

and shall be tabulated on Form RA-5 according to Table RA-I-1500.

RA-I-1600 POWER INPUT

The power input expressed in kW/ton of refrigeration shall be within 5% of the Manufacturer's proposed power input for the full load test.

RA-I-1700 REFRIGERATION MACHINES EQUIPPED WITH SUBCOOLERS

Subcooler performance will be adversely affected when the condensing water temperature is increased to simulate fouling. To compensate, it is acceptable to add 0.1% to the kW/ton of refrigeration tolerance of 5% for each Fahrenheit degree of adjustment made to the entering condenser water temperature.

Copyright ASME International
Provided by IHS under license with ASME
No reproduction or networking permitted without license from IHS
Not for Resale

NONMANDATORY APPENDIX FA-B
DIVISION OF RESPONSIBILITY

This Nonmandatory Appendix is intended to identify the roles normally assumed by the organizations responsible for fulfilling Code requirements when not specifically addressed in an article or subarticle. These are guidelines to assist with Code compliance and are not to be construed as legal or contractual responsibilities unless so invoked by the Owner or designee.

TABLE FA-B-1000
DIVISION OF RESPONSIBILITY

FA-	Item	Responsible Party
3000	Materials	Engineer/Manufacturer
4000	Design conditions	Engineer
4210	Design requirements	Manufacturer
4220	Pad	Manufacturer
4230	Mesh pad frame and assembly	Manufacturer
4240	Seismic	Engineer/Manufacturer
5000	Inspection and testing	Engineer/Manufacturer
6000	Fabrication	Manufacturer
7100	Packaging	Manufacturer
7200	Loading for shipment	Manufacturer
7300	Storage	Manufacturer/Owner
8000	Quality assurance	Manufacturer
9000	Nameplates	Manufacturer

Copyright ASME International
Provided by IHS under license with ASME
No reproduction or networking permitted without license from IHS
Not for Resale

(03)
(a)

SECTION FB
MEDIUM EFFICIENCY FILTERS

FB-1000	**Introduction**	340
FB-1100	Scope	340
FB-2000	**Referenced Documents**	341
FB-3000	**Materials**	342
FB-3100	Allowable Materials	342
FB-3200	Special Limitations of Materials	342
FB-4000	**Design**	343
FB-4100	General Design	343
FB-4200	Design Criteria	343
FB-4300	Structural Requirements	343
FB-5000	**Inspection and Testing**	344
FB-5100	Inspection Plan	344
FB-5200	Qualification Testing	344
FB-6000	**Fabrication**	345
FB-6100	General	345
FB-7000	**Packaging, Shipping, Receiving, Storage, and Handling**	346
FB-7100	General	346
FB-8000	**Quality Assurance**	347
FB-8100	Documentation	347

Copyright ASME International
Provided by IHS under license with ASME
No reproduction or networking permitted without license from IHS
Not for Resale

FB-9000 **Labels and Marking** 348
FB-9100 Filter Markings 348
FB-9200 Package Marking 348

Table
FB-4200-1 Medium Efficiency Filter Classes 343

Nonmandatory Appendix
FB-A Division of Responsibility 349

--`,,```,,,,````-`-`,,`,,`,`,,`---

Copyright ASME International
Provided by IHS under license with ASME
No reproduction or networking permitted without license from IHS
Not for Resale

ARTICLE FB-1000
INTRODUCTION

FB-1100 SCOPE

This Section of the Code provides minimum requirements for the performance, design, construction, acceptance testing, and quality assurance for medium efficiency filters used in air and gas cleaning systems in nuclear facilities.

FB-1110 PURPOSE

The purpose of this Section is to assure that medium efficiency filters (see Table FB-4200-1) used in nuclear facilities for nuclear safety related air and gas treatment systems are acceptable in all aspects of performance, design, construction, acceptance testing and quality assurance.

FB-1120 APPLICABILITY

This Section shall be applied to the use of medium efficiency filters installed in nuclear facilities. The normal function of these filters is to reduce the particulate loading to HEPA filters. This Section applies to extended-media, dry-type filters with an average atmospheric dust spot efficiency, per ASHRAE 52.1, greater than 40% but less than 99%.

FB-1121 Limitations

This Section does not cover the following:

(a) system design requirements for the use of filters

(b) mounting frames for the medium efficiency filters in the air or gas cleaning system

FB-1130 DEFINITIONS AND TERMS

The following terms have special meaning in the context of this Section.

filter frame: modular structure(s) attached to the media of the filter.

media: part(s) of the filter designed to remove particulate matter from the air stream.

sealants: materials used for the following purposes:

(a) to hold the media in position in the frame

(b) to attach gaskets

(c) to splice media

separator: device used to support and position folds in the filter media to provide air passage.

Copyright ASME International
Provided by IHS under license with ASME
No reproduction or networking permitted without license from IHS
Not for Resale

ARTICLE FB-2000
REFERENCED DOCUMENTS

Common application documents referenced in this Code section are detailed in Article AA-2000. Where ASTM material specifications are specified, the equivalent ASME material specification may be substituted. Where the date is not cited, the latest revision shall be used.

ANSI/ASHRAE 52.1-1992. Gravimetric and Dust Spot Procedures for Testing Air Cleaning Devices Used in General Ventilation for Removing Particulate Matter[1]

Publisher: American Society of Heating, Refrigerating and Air Conditioning Engineers (ASHRAE), 1791 Tullie Circle, NE, Atlanta, GA 30329

[1] May also be obtained from American National Standards Institute, 25 West 43rd Street, New York, NY 10036.

ANSI/ASQC Z1.4-1993, American National Standard Sampling Procedures and Tables for Inspection by Attributes[1]

Publisher: American Society for Quality (ASQ), P.O. Box 3005, Milwaukee, WI 53201-3005

ASTM D 1056-91, Specification for Flexible Cellular Materials — Sponge or Expanded Rubber

Publisher: American Society for Testing and Materials (ASTM), 100 Barr Harbor Drive, West Conshohocken, PA 19428-2959

UL 900-94, Standard for Air Filters Units

Publisher: Underwriters Laboratories, Inc. (UL), 333 Pfingsten Road, Northbrook, IL 60062-2096

Copyright ASME International
Provided by IHS under license with ASME
No reproduction or networking permitted without license from IHS
Not for Resale

ARTICLE FB-3000
MATERIALS

FB-3100 ALLOWABLE MATERIALS

FB-3110 MEDIA

The media shall be glass fiber.

FB-3120 FILTER FRAME

The filter frames shall consist of any corrosion-resistant material suitable for the environment as specified in accordance with Article FB-4000.

FB-3130 SEPARATORS

The separators shall be any corrosion-resistant material suitable for the environment as specified in accordance with Article FB-4000.

FB-3140 SEALANTS AND ADHESIVES

Sealants and adhesives shall self-extinguishing as evidenced by testing the filter in accordance with UL 900, Class 1.

FB-3150 GASKETS

Gasket material shall be oil-resistant, expanded cellular elastomer, in accordance with ASTM D 1056, Grade SCE-43E1 or SCE-44E1.

FB-3200 SPECIAL LIMITATIONS OF MATERIALS

The consideration of material deterioration caused by service conditions is generally outside the scope of this Code. It is the responsibility of the Owner, or Engineer, to identify the environment in which the filter must operate.

Copyright ASME International
Provided by IHS under license with ASME
No reproduction or networking permitted without license from IHS
Not for Resale

ARTICLE FB-4000
DESIGN

FB-4100 GENERAL DESIGN

Medium efficiency filters shall be replaceable, extended media, dry-type, and certified to UL 900, Class 1.

FB-4200 DESIGN CRITERIA

Design criteria shall be specified for the following parameters:

(a) type of gas to be treated
(b) rated flow, nominal (CFM) per ASHRAE 52
(c) design pressure
(d) pressure-time transients
(e) temperature operating range (°F)
(f) relative humidity operating range (%RH)
(g) containments to be removed
(h) medium efficiency filter class required (see Table FB-4200-1
(i) integrated radiation dose
(j) initial resistance (in. wg) at rated flow per ASHRAE 52
(k) final operating resistance (in. wg) at rated flow per ASHRAE 52
(l) seismic requirements
(m) minimum dust holding capacity (lb) per ASHRAE 52
(n) medium efficiency filter dimensions (in.) (h × w × d)

TABLE FB-4200-1
MEDIUM EFFICIENCY FILTER CLASSES

Class	Average Atmospheric Dust Spot Efficiency (ASHRAE 52)
A	90% and up
B	80% to 89%
C	70% to 79%
D	60% to 69%
E	50% to 59%
F	40% to 49%

FB-4300 STRUCTURAL REQUIREMENTS

FB-4310 GENERAL

Medium efficiency filters shall be in accordance with AA-4350.

FB-4320 ACCEPTANCE CRITERIA

The medium efficiency filters shall maintain structural integrity. No structural damage by visual inspection shall be present after test.

Copyright ASME International
Provided by IHS under license with ASME
No reproduction or networking permitted without license from IHS
Not for Resale

ARTICLE FB-5000
INSPECTION AND TESTING

The inspection and testing of medium efficiency filters shall conform to the requirements of Article AA-5000 and the specific requirements of this Article.

FB-5100 INSPECTION PLAN

FB-5110

The Manufacturer shall establish a recognized sampling and inspection plan acceptable to the purchaser. [Example: ANSI Z1.4 for single sampling, normal inspection, Level I, with an AQL (maximum percent defective) of 1.5.]

FB-5120

Inspection samples shall be filters that have been packaged for shipment.

FB-5130

For the purpose of the inspection plan, a lot is the quantity of filters from which the inspection sample is selected.

FB-5140

Inspection shall be visual. The Manufacturer shall develop a checklist to plan the visual inspection and to verify that observations were performed. This checklist shall establish minimum inspection requirements to be followed and shall include provision for the following:

(a) inspection of the media for splits, tears, or holes

(b) inspection of the connection between the media and the filter frame for splits, tears, or holes

(c) inspection for missing or incorrect parts or components

(d) inspection for incorrect fit of parts or components

(e) inspection of workmanship

(f) inspection for cleanliness and appearance

(g) inspection for correct identification on the filter nameplate and carton

FB-5150

If a lot (as defined in ANSI Z1.4) is rejected, it may be resubmitted for inspection. Following 100% inspection of the lot and repair or removal of all defective units, the lot will then be inspected in the same manner as any other lot using the sampling and inspection plan.

FB-5200 QUALIFICATION TESTING

FB-5210

Three medium efficiency filters of the design to be qualified shall be tested in accordance with ASHRAE 52 to obtain standard ratings. These ratings may be obtained by averaging the results of the tests on the three filters. Standard ratings shall be established at airflow rate(s) selected by the Manufacturer for initial resistance, initial atmospheric dust spot efficiency, average atmospheric dust spot efficiency, average synthetic dust weight arrestment, and dust holding capacity.

FB-5220

Medium efficiency filters shall be certified to conform to UL 900, Class 1.

FB-5230

The filter design must be requalified whenever there is a change in design, material, or manufacturing methods.

--`,,```,,,,````-`-`,,`,,`,`,,`---

Copyright ASME International
Provided by IHS under license with ASME
No reproduction or networking permitted without license from IHS

Not for Resale

ARTICLE FB-6000
FABRICATION

FB-6100 GENERAL

The medium efficiency filter shall be assembled from materials that conform to Article FB-3000 and meet the design requirements of Article FB-4000. Following assembly, the filter shall be inspected and tested in accordance with the requirements of Article FB-5000.

--`,,```,,,,````-`-`,,`,,`,`,,`---

Copyright ASME International
Provided by IHS under license with ASME
No reproduction or networking permitted without license from IHS

Not for Resale

ARTICLE FB-7000
PACKAGING, SHIPPING, RECEIVING, STORAGE, AND HANDLING

FB-7100 GENERAL

Filters with separators shall be placed in protective cartons with pleats arranged vertically. All packaging, shipping, receiving, storage, and handling shall meet the requirements of Article AA-7000 and ASME NQA-1-1994.

Copyright ASME International
Provided by IHS under license with ASME
No reproduction or networking permitted without license from IHS
Not for Resale

ARTICLE FB-8000
QUALITY ASSURANCE

FB-8100 DOCUMENTATION

The following documentation shall be made available to the purchaser, if requested:

(a) a table or drawing giving outline dimensions of the filter

(b) a list of the materials of construction with appropriate specifications

(c) a list of the medium efficiency filter performance ratings that shall include as a minimum the rated airflow, the initial resistance, the final resistance, the average atmospheric dust spot efficiency, the average synthetic dust weight arrestance, and the dust holding capacity.

(d) certification that the performance rating provided to meet the requirements of Article FB-8100(c) were obtained in conformance with ASHRAE 52

(e) certification that the filter conforms to UL 900, Class 1 requirements

Copyright ASME International
Provided by IHS under license with ASME
No reproduction or networking permitted without license from IHS
Not for Resale

ARTICLE FB-9000
LABELS AND MARKING

FB-9100 FILTER MARKINGS

Each filter shall be equipped with a permanent label. The marking on the label shall be legible and shall provide the following information:

(a) Manufacturer's name and location
(b) Manufacturer's designation and part number
(c) date of manufacture (month and year)
(d) rated flow capacity
(e) average initial pressure drop in inches of water
(f) recommended final operating resistance
(g) average atmospheric dust spot efficiency
(h) airflow direction arrow (showing both directions if allowable without impacting published ratings)
(i) installation orientation (e.g., "Install This Way Up" or "Install With This Side Vertical")
(j) UL label

FB-9200 PACKAGE MARKING

Marking or labeling of each shipping container (carton containing one filter) shall be of a size and type that can be read at a distance of 3 ft. As a minimum, the following information shall be provided:

(a) Manufacturer's name
(b) Manufacturer's designation and part number
(c) arrows and "This Side Up" indication orientation for shipping and storage and "Fragile" in letters no less than $\frac{3}{4}$ in. high
(d) purchase order number or other identifying markings requested by the Purchaser

Copyright ASME International
Provided by IHS under license with ASME
No reproduction or networking permitted without license from IHS
Not for Resale

NONMANDATORY APPENDIX FB-A
DIVISION OF RESPONSIBILITY

This Nonmandatory Appendix is intended to identify the roles normally assumed by the organizations responsible for fulfilling Code requirements when not specifically addressed in an article or subarticle. These are guidelines to assist with Code compliance and are not to be construed as legal or contractual responsibilities unless so invoked by the Owner or designee.

TABLE FB-A-1000
DIVISION OF RESPONSIBILITY

FB-	Item	Responsible Party
3000	Materials	Manufacturer/Owner
4100	General design	Engineer
4200	Design criteria	Engineer
4300	Structural requirements	Manufacturer
5000	Inspection and Testing	Manufacturer
6000	Fabrication	Manufacturer
7000	Packaging, shipping, receiving, storage, and handling	Manufacturer/Purchaser
8000	Quality Assurance	Manufacturer
9000	Labels and marking	Manufacturer

Copyright ASME International
Provided by IHS under license with ASME
No reproduction or networking permitted without license from IHS
Not for Resale

Copyright ASME International
Provided by IHS under license with ASME
No reproduction or networking permitted without license from IHS
Not for Resale

ASME AG-1–2003 INTERPRETATIONS

Replies to Technical Inquiries
November 1996 through January 2004

FOREWORD

This publication includes all of the written replies issued between the indicated dates by the Secretary, speaking for the ASME Committee on Nuclear Air and Gas Treatment Equipment, to inquiries concerning interpretations of technical aspects of ASME AG-1–2003, Code on Nuclear Air and Gas Treatment.

These interpretations were prepared in accordance with the accredited ASME procedures. ASME procedures provide for reconsideration of these interpretations when or if additional information is available which the inquirer believes might affect the interpretation. Further, persons aggrieved by this interpretation may appeal to the cognizant ASME Committee or Subcommittee. ASME does not "approve," "certify," "rate," or "endorse" any item, construction, proprietary device, or activity.

An interpretation applies to the edition or addenda stated in the interpretation itself, or, if none is stated, to the latest published edition and addenda at the time it is issued. Subsequent revisions to the rules may have superseded the reply.

For detailed instructions on the preparation of technical inquiries, refer to the Preparation of Technical Inquiries to the Committee on Nuclear Air and Gas Treatment in Mandatory Appendix I of AG-1–2003.

--`,,```,,,,````-`-`,,`,,`,`,,`---

Copyright ASME International
Provided by IHS under license with ASME
No reproduction or networking permitted without license from IHS

Not for Resale

Interpretation: 03-1

Subject: ASME AG-1–1997 (with ASME AG-1a–2000), ASME N510–1989(R1995), and ASME N509–1989(R1997)

Date Issued: May 9, 2002

File: IN 02-01

Question (1): According to the current ASME AG-1 and ASME N510 testing codes and specifications, can pressure drop across an operating HEPA filter (or HEPA filter bank) be interpreted as indicative of filter efficiency?

Reply (1): No. The current ASME AG-1 and ASME N510 testing codes do not address a correlation between pressure drop and efficiency. Pressure drop can change with dust loading, but this has no predictable correlation to filter efficiency.

Question (2): Can continuous monitoring of pressure drop across a HEPA filter (or HEPA filter bank) be indicative of any increase in penetration through the measured field?

Reply (2): No. Continuous monitoring of pressure drop, by itself, will not indicate a change in penetration.

Question (3): For a HEPA filter that meets the ASME N509 or ASME AG-1 requirements, can pressure drop measurement indicate quantitative HEPA filter integrity?

Reply (3): No. Pressure drop is not a quantitative measure of HEPA filter integrity.

Interpretation: 03-2

Subject: N510–1975 Edition, Section 12

Date Issued: March 28, 2003

File: IN 02-04

Question (1): Does the pulse mode of injection for testing adsorber banks meet the intent of N510–1975 Edition, Section 12, that describes the continuous injection method?

Reply (1): Yes.

Question (2): Is the pulse mode injection with continuously monitoring detectors equivalent to testing methods as tested in N510–1975 Edition, Section 12?

Reply (2): Yes.

Copyright ASME International
Provided by IHS under license with ASME
No reproduction or networking permitted without license from IHS
Not for Resale

Interpretation: 03-3

Subject: ASME AG-1, Section DA

Date Issued: November 1, 2003

File: IN 03-04

Question: If the damper is designed, manufactured, tested, and installed to ASME B31.1, as allowed in Subsubarticle DA-1210, would this also exclude the requirements of Subarticle TA-4200?

Reply: No, the testing of dampers as identified in Section TA is applicable.

Interpretation: 03-4

Subject: ASME AG-1, Section DA

Date Issued: November 1, 2003

File: IN 03-05

Question: If the damper is designed, manufactured, tested, and installed to ASME B31.1, as allowed in Subsubarticle DA-1210, would the actuator also be excluded from the actuator requirements and testing requirements identified in Section DA?

Reply: No, the actuator should not be excluded.

Interpretation: 03-5

Subject: ASME AG-1–1997, Section FC

Date Issued: January 12, 2004

File: IN 03-01

Question (1): Does the ASME Code cover HEPA filters with flows other than those listed in Table FC-4000-1?

Reply (1): Yes, ASME AG-1 does cover HEPA filters with flow rates other than those listed in Table FC-4000-1. Refer to Subsubarticle FC-4110(c).

Question (2): With the understanding that the reference to FC-4102 in Subsubarticle FC-4110 is incorrect, may special filter designs be certified as meeting the ASME AG-1 Code, per FC-4110(c), without meeting the requirements of FC-4110(a) and (b)?

Reply (2): No. Special filters will be designed to Section FK.

Copyright ASME International
Provided by IHS under license with ASME
No reproduction or networking permitted without license from IHS Not for Resale



A01221

Copyright ASME International
Provided by IHS under license with ASME
No reproduction or networking permitted without license from IHS
Not for Resale

ERRATA
to
ASME AG-1–2003
Code on Nuclear Air and Gas Treatment

Section FB of the 1997 edition (pgs. 367 – 382) is reinstated to replace Section FB as it appears on pgs. 338 – 350 in the 2003 edition. Please replace pgs. 338 – 350 of the 2003 edition with the pages from the 1997 edition. For a copy of the reinstated Section FB, please contact:

Secretary, ASME AG-1 Committee
The American Society of Mechanical Engineers
Three Park Avenue
New York, NY 10016-5990
sannac@asme.org

THE AMERICAN SOCIETY OF MECHANICAL ENGINEERS
Three Park Avenue, New York, NY 10016-5990

February 2004

A0122E

Copyright ASME International
Provided by IHS under license with ASME
No reproduction or networking permitted without license from IHS

Not for Resale

Copyright ASME International
Provided by IHS under license with ASME
No reproduction or networking permitted without license from IHS
Not for Resale

ASME AG-1–2003
(Revision of ASME AG-1–1997)

CODE ON NUCLEAR AIR AND GAS TREATMENT

AN AMERICAN NATIONAL STANDARD



The American Society of Mechanical Engineers

Copyright ASME International
Provided by IHS under license with ASME
No reproduction or networking permitted without license from IHS

Not for Resale

--`,,```,,,,````-`-`,,`,,`,`,,`---

Copyright ASME International
Provided by IHS under license with ASME
No reproduction or networking permitted without license from IHS

Not for Resale



The American Society of Mechanical Engineers

AN AMERICAN NATIONAL STANDARD

CODE ON NUCLEAR AIR AND GAS TREATMENT

ASME AG-1-2003

(Revision of ASME AG-1-1997)

Copyright ASME International
Provided by IHS under license with ASME
No reproduction or networking permitted without license from IHS

Not for Resale

Date of Issuance: August 29, 2003

The 2003 edition of this Code is being issued with an automatic addenda subscription service. The use of addenda allows revisions made in response to public review comments or committee actions to be published as necessary. The next edition of this Code is scheduled for publication in 2006.

ASME issues written replies to inquiries concerning interpretations of technical aspects of this Code. The interpretations will be included with the above addenda service.

ASME is the registered trademark of The American Society of Mechanical Engineers.

This code or standard was developed under procedures accredited as meeting the criteria for American National Standards. The Standards Committee that approved the code or standard was balanced to assure that individuals from competent and concerned interests have had an opportunity to participate. The proposed code or standard was made available for public review and comment that provides an opportunity for additional public input from industry, academia, regulatory agencies, and the public-at-large.

ASME does not "approve," "rate," or "endorse" any item, construction, proprietary device, or activity.

ASME does not take any position with respect to the validity of any patent rights asserted in connection with any items mentioned in this document, and does not undertake to insure anyone utilizing a standard against liability for infringement of any applicable letters patent, nor assumes any such liability. Users of a code or standard are expressly advised that determination of the validity of any such patent rights, and the risk of infringement of such rights, is entirely their own responsibility.

Participation by federal agency representative(s) or person(s) affiliated with industry is not to be interpreted as government or industry endorsement of this code or standard.

ASME accepts responsibility for only those interpretations of this document issued in accordance with the established ASME procedures and policies, which precludes the issuance of interpretations by individuals.

No part of this document may be reproduced in any form,
in an electronic retrieval system or otherwise,
without the prior written permission of the publisher.

The American Society of Mechanical Engineers
Three Park Avenue, New York, NY 10016-5990

Copyright © 2003 by
THE AMERICAN SOCIETY OF MECHANICAL ENGINEERS
All rights reserved
Printed in U.S.A.

Copyright ASME International
Provided by IHS under license with ASME
No reproduction or networking permitted without license from IHS

Not for Resale

CONTENTS

A Detailed Contents Precedes Each Article

Foreword		v
Roster		vi
Organization of ASME AG-1		xiii
Summary of Changes		xv
Division I	**General Requirements**	1
Section AA	Common Articles	2
Division II	**Ventilation Air Cleaning and Ventilation Air Conditioning**	85
Section BA	Fans and Blowers	86
Section DA	Dampers and Louvers	111
Section SA	Ductwork	143
Section HA	Housings	192
Section RA	Refrigeration Equipment	232
Section CA	Conditioning Equipment	278
Section FA	Moisture Separators	323
Section FB	Medium Efficiency Filters	338
Section FC	HEPA Filters	351
Section FD	Type II Adsorber Cells	378
Section FE	Type III Adsorber Cells	394
Section FF	Adsorbent Media	430
Section FG	Mounting Frames CONAGT Air-Cleaning Equipment Nuclear Safety-Related Equipment	442
Section FH	Other Adsorbers (In the Course of Preparation)	462
Section FI	Metal Media Filters (In the Course of Preparation)	462
Section FJ	Low Efficiency Filters (In the Course of Preparation)	462
Section FK	Special Round and Duct-Connected HEPA Filters (In the Course of Preparation)	462
Section IA	Instrumentation and Controls	463
Division III	**Process Gas Treatment** (All Sections in the Course of Preparation)	489
Section GA	Pressure Vessels, Piping, Heat Exchangers, and Valves	489
Section GB	Noble Gas Hold-Up Equipment	489
Section GC	Compressors	489

Copyright ASME International
Provided by IHS under license with ASME
No reproduction or networking permitted without license from IHS
Not for Resale

Section GD	Other Radionuclide Equipment	489
Section GE	Hydrogen Recombiners	489
Section GF	Gas Sampling	489
Division IV	**Testing Procedures**	491
Section TA	Field Testing of Air Treatment Systems	492
Section TB	Field Testing of Gas-Processing Systems (In the Course of Preparation)	554
Mandatory Appendix		
I	Preparation of Technical Inquiries to the Committee on Nuclear Air and Gas Treatment	555
Nonmandatory Appendix		
A	Format Guide for Technical Inquiries	557

Copyright ASME International
Provided by IHS under license with ASME
No reproduction or networking permitted without license from IHS
Not for Resale

FOREWORD (03)

In 1971, what is now the Committee on Nuclear Air and Gas Treatment was organized as ANSI N45.8 to develop standards for high reliability air cleaning equipment for nuclear facilities and corresponding tests to confirm performance of the equipment. Two standards, N509 and N510, were published in 1975 and 1976 and updated in 1980 and 1989.

In 1976, under the accredited organization rules, the Committee was reorganized as the ASME Committee on Nuclear Air and Gas Treatment. The scope of responsibility was broadened to include the development of codes and standards for design, fabrication, inspection, and testing of air cleaning and conditioning components and appurtenances, as well as air cleaning components used in engineering safety systems in nuclear facilities. The current assignment is to produce code documents rather than standards.

Although this Code is written for nuclear power and nuclear fuel cycle facilities, the design requirements of these documents may be referenced for the design, fabrication, inspection, and testing of ventilation air cleaning and air conditioning equipment for other types of facilities. The user, however, is cautioned to carefully review these Code requirements for applicability to specific applications other than nuclear power and nuclear fuel cycle facilities.

The user of the Code will note that metric equivalents of U.S. customary units appear throughout this issue of the Code. The values stated in U.S. customary units are to be regarded as the standard.

Membership on the committee, subcommittees, and subgroups includes nuclear steam supply system suppliers, operating owners, architect/engineers, members of the Nuclear Regulatory Commission, various manufacturers, and individuals with general interest. Only those individuals with demonstrated abilities in the specific areas involved are solicited as members. The balance of interest committee members is closely watched to ensure that all interests are represented.

The first Edition of this Code was approved by the American National Standards Institute on April 30, 1985, and issued on February 28, 1986. The second Edition was approved by ANSI on March 18, 1988. This sixth Edition was approved by ANSI on April 10, 2003.

Copyright ASME International
Provided by IHS under license with ASME
No reproduction or networking permitted without license from IHS
Not for Resale

ASME COMMITTEE ON NUCLEAR AIR AND GAS TREATMENT

(The following is the roster of the Committee at the time of approval of this Code.)

MAIN COMMITTEE

R. D. Porco, *Chair*
C. A. Sanna, *Secretary*

L. T. Ahlman, Consultant
R. R. Bellamy, U.S. Nuclear Regulatory Commission
J. R. Edwards, CSC/Flanders
M. W. First, Harvard School of Public Health
M. J. Fox, Engineered Environments, Inc.
C. E. Graves, NUCON International, Inc.
M. R. Hargan, Hargan Engineering
J. J. Hayes, Jr., U.S. Nuclear Regulatory Commission
J. Kriskovich, Vista Engineering
M. C. Patel, TXU Electric
M. E. Pest, APS
G. S. Petersen, Washington Group International, Inc.
R. D. Raheja, Sargent & Lundy Engineers
M. E. Saucier, SSM Industries, Inc.
W. J. Ter Kuile, Interfilta, UK, Ltd.
R. M. Van Becelaere, Ruskin Manufacturing Division
T. J. Vogan, Sargent & Lundy Engineers
J. D. York, Jr., Consultant
R. Zavadoski, Defense Nuclear Facilities

EXECUTIVE COMMITTEE

R. D. Porco, *Vice Chair*
C. A. Sanna, *Secretary*

R. R. Bellamy, U.S. Nuclear Regulatory Commission
M. R. Hargan, Hargan Engineering
J. J. Hayes, Jr., U.S. Nuclear Regulatory Commission
J. Kriskovich, Vista Engineering
M. E. Pest, APS
M. E. Saucier, SSM Industries, Inc.
T. J. Vogan, Sargent & Lundy Engineers

Copyright ASME International
Provided by IHS under license with ASME
No reproduction or networking permitted without license from IHS
Not for Resale

CONAGT Honorary Members

D. J. Gladden, Consultant
C. Golden, Consultant
L. J. Klaes, Consultant
W. H. Miller, Jr., Innogy America, LLC
S. C. Ornberg, Consultant
R. R. Weidler, Duke Power Co.

Special Working Group on Editorial Review

R. R. Bellamy, *Chair,* U.S. Nuclear Regulatory Commission
B. C. Elliott, Aerofin Corp.
M. W. First, Harvard School of Public Health
J. R. Hunt, NCS Corp.
C. G. Kramer, Parsons Power Group, Inc.
W. J. McAndrew, RMRS
M. E. Saucier, SSM Industries, Inc.
A. Soma, Barnebey & Sutcliffe Corp.
J. D. York, Jr., Consultant

SUBCOMMITTEE ON VENTILATION AIR CLEANING EQUIPMENT

J. J. Hayes, Jr., *Chair,* U.S. Nuclear Regulatory Commission
R. R. Bellamy, U.S. Nuclear Regulatory Commission
I. S. Boxall, Fairey Microfiltrex, Ltd.
W. H. Cambo, Lydall, Inc.
M. A. Doersam, Ellis & Watts International, Inc.
J. R. Edwards, Flanders/CSC
B. Franklin, AAF International
J. Fretthold, Kaiser-Hill Co., Rocky Flats
C. E. Graves, NUCON International, Inc.
G. S. Grewal, Fluor Daniel, Inc.
R. L. Heiden, U.S. Army Corps of Engineers
W. J. McAndrew, RMRS
H. A. Mearns, ECBC
G. W. Moore, Flanders/CSC
M. C. Patel, TXU Electric
M. E. Pierce, Hollingsworth & Vose
G. G. Pyle, Kapl, Inc.
C. I. Ricketts, New Mexico State University
B. C. Seam, Bechtel National, Inc.
J. W. Slawski, U.S. Department of Energy
W. J. Ter Kuile, Interfilta UK, Ltd.
L. D. Weber, Techmark Corp.
M. B. Whitlock, Pall Corp.

Copyright ASME International
Provided by IHS under license with ASME
No reproduction or networking permitted without license from IHS
Not for Resale

Subgroup on HEPA Filters

M. E. Pierce, *Chair,* Hollingsworth & Vose
D. J. Adamson, WSRC
W. H. Cambo, Lydall, Inc.
B. Franklin, AAF International
J. Fretthold, Kaiser-Hill Co., Rocky Flats
G. S. Grewal, Fluor Daniel, Inc.
W. J. McAndrew, RMRS
H. A. Mearns, ECBC
G. G. Pyle, KAPL, Inc.
C. I. Ricketts, New Mexico State University
R. C. Scripsick, University of California at Los Alamos
B. C. Seam, Bechtel National, Inc.
J. W. Slawski, U.S. Department of Energy
W. J. Ter Kuile, Interfilta UK, Ltd.

Subgroup on Metal Filters

L. D. Weber, *Chair,* Techmark Corp.
D. J. Adamson, WSRC
I. S. Boxall, Fairey Microfiltrex, Ltd.
D. W. Crosby, Air Techniques International
G. S. Grewal, Fluor Daniel, Inc.
W. J. McAndrew, RMRS
M. B. Whitlock, Pall Corp.

Subgroup on Special HEPA Filters (FK)

J. Fretthold, *Chair,* Kaiser-Hill Co., Rocky Flats
D. J. Adamson, WSRC
J. R. Blacklaw, Washington State Department of Health
W. H. Cambo, Lydall, Inc.
D. W. Crosby, Air Techniques International
B. Franklin, AAF International
G. Garcia, Consultant
G. Miller, Lawrence Livermore National Laboratories
G. W. Moore, Flanders/CSC
J. W. Slawski, U.S. Department of Energy
W. J. Ter Kuile, Interfilta UK, Ltd.

Subgroup on Medium Efficiency Filters

M. C. Patel, *Chair,* TXU Electric
B. Franklin, AAF International
W. J. McAndrew, RMRS
J. W. Slawski, U.S. Department of Energy

Copyright ASME International
Provided by IHS under license with ASME
No reproduction or networking permitted without license from IHS
Not for Resale

Subgroup on Low Efficiency Filters (FJ)

D. Ghosh, *Chair,* Southern Company Services, Inc.
B. Franklin, AAF International
H. A. Mearns, ECBC
G. W. Moore, Flanders/CSC
M. C. Patel, TXU Electric

Subgroup on Moisture Separators

W. J. Ter Kuile, Interfilta UK, Ltd.
J. Fretthold, Kaiser-Hill Co., Rocky Flats
W. J. McAndrew, RMRS
M. C. Patel, TXU Electric

Subgroup on Type III Adsorbers

C. E. Graves, *Chair,* NUCON International, Inc.
R. R. Bellamy, U.S. Nuclear Regulatory Commission
M. A. Doersam, Ellis & Watts International, Inc.
W. J. McAndrew, RMRS
M. C. Patel, TXU Electric
A. Soma, Barnebey & Sutcliffe Corp.

Subgroup on Adsorbent Media

R. R. Bellamy, *Chair,* U.S. Nuclear Regulatory Commission
L. L. Dauber, U.S. Army, ERDEC
M. A. Doersam, Ellis & Watts International, Inc.
J. R. Edwards, CSC/Flanders
C. E. Graves, NUCON International, Inc.
H. A. Mearns, ECBC
R. W. Morrison, U.S. Army, ERDEC
A. Soma, Barnebey & Sutcliffe Corp.

Subgroup on Type II Adsorbers

C. E. Graves, *Chair,* NUCON International, Inc.
M. A. Doersam, Ellis & Watts International, Inc.
M. C. Patel, TXU Electric

Copyright ASME International
Provided by IHS under license with ASME
No reproduction or networking permitted without license from IHS
Not for Resale

Subgroup on Other Adsorbers

J. R. Edwards, *Chair,* CSC/Flanders
J. R. Blacklaw, Washington State Department of Health
M. A. Doersam, Ellis & Watts International, Inc.
A. Soma, Barnebey & Sutcliffe Corp.

Subgroup on Mounting Frames

M. A. Doersam, *Chair,* Ellis & Watts International, Inc.

Subgroup on Gas Process Treatment Equipment

J. Kriskovich, *Chair,* Vista Engineering
D. G. Adams, Commonwealth Edison Co.
M. J. Fox, Engineered Environments, Inc.
M. R. Hargan, Hargan Engineering
J. D. York, Jr., Consultant

SUBCOMMITTEE ON COMMON EQUIPMENT

M. E. Saucier, *Chair,* SSM Industries, Inc.
L. T. Ahlman, Consultant
D. A. Brock, Southern Company Services, Inc.
G. P. Brotherson, Consultant
R. R. Campbell, Tennessee Valley Authority
S. M. Chan, Bechtel Power Corp.
D. L. Davenport, EMC Engineering, Inc.
M. A. Doersam, Ellis & Watts International, Inc.
R. L. Furniss, Howden Buffalo, Inc.
C. G. Kramer, Parsons Power Group, Inc.
R. A. Lichtenwald, Reed National Air Products Group
G. W. Moore, CSC/Flanders
P. S. Parthsarathy, Bechtel National, Inc.
W. A. Pysh, Exitec Corp.
D. R. Ramos, Parsons Power Group, Inc.
J. B. Roberts, Westinghouse Savannah River Co.
A. Soma, Barnebey & Sutcliffe Corp.
R. M. Van Becelaere, Ruskin Manufacturing Division

Copyright ASME International
Provided by IHS under license with ASME
No reproduction or networking permitted without license from IHS
Not for Resale

SUBCOMMITTEE ON VENTILATION AIR CONDITIONING EQUIPMENT

M. R. Hargan, *Chair,* Hargan Engineering
G. S. Petersen, *Vice Chair,* Washington Group International, Inc.
D. G. Adams, Commonwealth Edison Co.
L. E. Anderlini, Fluor Hanford, Inc.
L. W. Burgett, The Trane Co.
P. H. Burwinkel, Southern Nuclear
B. C. Elliott, Aerofin Corp.
M. J. Fox, Engineered Environments, Inc.
D. Ghosh, Southern Company Services, Inc.

Subgroup on Refrigeration Equipment

P. H. Burwinkel, *Chair,* Southern Nuclear
D. G. Adams, Commonwealth Edison Co.
L. E. Anderlini, Fluor Hanford, Inc.
L. W. Burgett, The Trane Co.
W. Clemenson, Consultant
M. J. Fox, Engineered Environments, Inc.
D. Ghosh, Southern Company Services, Inc.
G. S. Petersen, Washington Group International, Inc.

Subgroup on Heating and Cooling Coils

M. R. Hargan, *Chair,* Hargan Engineering
L. E. Anderlini, Fluor Hanford, Inc.
P. H. Burwinkel, Southern Nuclear
B. C. Elliott, Aerofin Corp.
M. J. Fox, Engineered Environments, Inc.

Subgroup on Electric Heaters

T. A. Meisner, *Chair,* Allen-Bradley Co.
R. N. Knoche, Consultant

Copyright ASME International
Provided by IHS under license with ASME
No reproduction or networking permitted without license from IHS
Not for Resale

SUBCOMMITTEE ON GENERAL SUPPORT SERVICES

T. J. Vogan, *Chair,* Sargent & Lundy
R. R. Raheja, *Vice Chair,* Sargent & Lundy
J. D. York, Jr., *Secretary,* Consultant
G. V. Chapman, Trentec, Inc.
B. Franklin, AAF International
J. B. Hayes, International Consulting Engineering, Inc.
Y. Jing, Henan Nuclear Air Cleaning Co., Ltd.
W. F. Williams, Jr., TU Electric

Subgroup on General Requirements

J. D. York, Jr., *Chair,* Consultant

SUBCOMMITTEE ON FIELD TESTING PROCEDURE

M. E. Pest, *Chair,* APS
J. R. Hunt, *Vice Chair,* NCS Corp.
E. M. Banks, NUCON International, Inc.
P. H. Burwinkel, Southern Nuclear
D. W. Crosby, Air Techniques International
M. W. First, Harvard School of Public Health
J. Fretthold, Kaiser-Hill Co., Rocky Flats
V. H. Kluge, Arizona Public Service Co., Palo Verde
L. Leonard, Leonard Designs
G. Miller, Lawrence Livermore National Laboratory
R. C. Scripsick, University of California — LANL
J. W. Slawski, U.S. Department of Energy
R. R. Sommer II, NUCON International, Inc.
W. O. Wikoff, PSEG-Nuclear
R. Zavadoski, Defense Nuclear Facilities

SUBCOMMITTEE ON TECHNOLOGY

R. Zavadoski, *Chair,* Defense Nuclear Facilities
E. M. Banks, NUCON International, Inc.
M. W. First, Harvard School of Public Health
W. O. Wikoff, PSEG-Nuclear

Copyright ASME International
Provided by IHS under license with ASME
No reproduction or networking permitted without license from IHS
Not for Resale

ORGANIZATION OF ASME AG-1

1. GENERAL

The ASME Code on Nuclear Air and Gas Treatment consists of Divisions I through IV. All Divisions are broken down into Sections designated by two capital letters. Each Division is made up as follows:

Division I: General Requirements
- Subsection AA: Common Articles

Division II: Ventilation Air Cleaning and Ventilation Air Conditioning
- Section BA: Fans and Blowers
- Section DA: Dampers and Louvers
- Section SA: Ductwork
- Section HA: Housings
- Section RA: Refrigeration Equipment
- Section CA: Conditioning Equipment
- Section FA: Moisture Separators
- Section FB: Prefilters
- Section FC: HEPA Filters
- Section FD: Type II Adsorber Cells
- Section FE: Type III Sorbers
- Section FF: Adsorbent Media
- Section FG: Frames
- Section FH: Other Adsorbers
- Section FI: Metal Media Filters
- Section FJ: Low Efficiency Filters
- Section FK: Special Round and Duct-Connected HEPA Filters
- Section IA: Instrumentation and Control

Division III: Pressure Gas Treatment
- Section GA: Pressure Vessels, Piping, Heat Exchangers, and Valves
- Section GB: Noble Gas Hold-Up Equipment
- Section GC: Compressors
- Section GD: Other Radionuclide Equipment
- Section GE: Hydrogen Recombiners
- Section GF: Gas Sampling

Division IV: Testing Procedures
- Section TA: Field Testing of Air Treatment Systems
- Section TB: Field Testing of Gas Processing Systems
- Section TC: Personnel Qualification
- Section TD: Laboratory Qualification

2. SECTIONS

Sections are divided into articles, subarticles, paragraphs, and, where necessary, subparagraphs and subsubparagraphs.

3. ARTICLES

Articles are designated by the application letters indicated above for the sections, followed by Arabic numbers in units of 1000, such as BA-1000 or RA-2000. Where possible, articles dealing with the same topics are given the same number in each section in accordance with the following:

Article Number	Title
1000	Introduction
2000	Referenced Documents
3000	Materials
4000	Structural Design
5000	Inspection and Testing
6000	Fabrication, Joining, Welding, Brazing, Protective Coating, and Installation
7000	Packaging, Shipping, Receiving, Storage, and Handling
8000	Quality Assurance
9000	Nameplates and Stamping

The numbering of articles and the material contained in the articles may not, however, be consecutive. Because the complete outline may cover phases not applicable to a particular section or article, the rules have been prepared with some gaps in the numbering.

Copyright ASME International
Provided by IHS under license with ASME
No reproduction or networking permitted without license from IHS
Not for Resale

4. SUBARTICLES

Subarticles are numbered in units of 100, such as BA-1100 or RA-1200.

5. SUBSUBARTICLES

Subsubarticles are numbered in units of 10, such as BA-2130, and generally have no text. When a number such as BA-1110 is followed by text, it is considered a paragraph.

6. PARAGRAPHS

Paragraphs are numbered in units of 1, such as BA-2131 or RA-2132.

7. SUBPARAGRAPHS

Subparagraphs, when they are major subdivisions of a paragraph, are designated by adding a decimal followed by one or more digits to the paragraph number, such as BA-1111.1 or RA-1111.2. When they are minor subdivisions of a paragraph, subparagraphs may be designated by lowercase letters in parentheses, such as BA-1111(a) or RA-1111(b).

8. SUBSUBPARAGRAPHS

Subsubparagraphs are designated by adding lower case letters in parentheses to major subparagraph numbers, such as BA-1111.1(a) or RA-1111(b). When further subdivisions of minor subparagraphs are necessary, subsubparagraphs are designated by adding Arabic numerals in parentheses to the subparagraph designation, such as BA-1111(a)(1) or RA-1111(a)(2).

9. APPENDICES

Appendices pertaining to each section appear at the end of each section and are designated with the section prefix. Nonmandatory appendices are designated by letters of the alphabet, and mandatory appendices are designated by Roman numerals. Metric appendices carry the same designators as customary appendices, with the prefix "M."

Copyright ASME International
Provided by IHS under license with ASME
No reproduction or networking permitted without license from IHS
Not for Resale

ASME AG-1–2003
SUMMARY OF CHANGES

Following approval by the ASME Committee on Nuclear Air and Gas Treatment (CONAGT) and ASME, and after public review, ASME AG-1–2003 was approved by the American National Standards Institute on April 10, 2003.

ASME AG-1–2003, which has been editorially revised in its entirety, includes revisions and editorial changes introduced in ASME AG-1a–2001, as well as the following changes identified by a margin note, **(03)**.

Page	*Location*	*Change*
v	Foreword	Revised
235	Article RA-2000	Revised in its entirety
242	RA-5100	Revised
265	Article RA-I-1000	(1) First paragraph revised (2) Footnote 1 deleted
269	Article RA-MI-1000	(1) First paragraph revised (2) Footnote 1 deleted
282	Article CA-2000	Revised in its entirety
285	Table CA-3230	Revised
286	Table CA-3310	Revised
287	Table CA-3410	Revised
289	CA-4126	Revised in its entirety
292	CA-4227	Revised in its entirety
293, 294	CA-4323	Subparagraph (c) revised
	CA-4325	Subparagraphs (b) and (e) revised
	CA-4327	Subparagraph (b) revised
303	Article CA-7000	Revised in its entirety
338–350	Section FB	Added

Copyright ASME International
Provided by IHS under license with ASME
No reproduction or networking permitted without license from IHS
Not for Resale

--`,,```,,,,````-`-`,,`,,`,`,,`---

Copyright ASME International
Provided by IHS under license with ASME
No reproduction or networking permitted without license from IHS

Not for Resale

Division I
General Requirements

Copyright ASME International
Provided by IHS under license with ASME
No reproduction or networking permitted without license from IHS
Not for Resale

SECTION AA
COMMON ARTICLES

AA-1000	**Introduction**	4
AA-1100	Scope	4
AA-2000	**Referenced Documents**	9
AA-3000	**Materials**	11
AA-4000	**Structural Design**	12
AA-4100	Scope	12
AA-4200	Design Criteria	12
AA-4300	Design of Equipment Systems and Their Supporting Elements	14
AA-4400	Documentation Requirements	24
AA-5000	**Inspection and Testing**	27
AA-5100	General	27
AA-5200	Visual Inspection	27
AA-5300	Welded Connections	28
AA-5400	Bolted Connections	28
AA-5500	Fabrication Tolerances	28
AA-5600	Pressure and Leak Testing	28
AA-5700	Performance and Functional Testing	28
AA-5800	Seismic Testing	28
AA-6000	**Fabrication, Joining, Welding, Brazing, Protective Coating, and Installation**	29
AA-6100	General	29
AA-6200	Fabrication Processes	29
AA-6300	Welding Requirements	31
AA-6400	Brazing	34
AA-6500	Cleaning and Coating	36
AA-6600	Installation Requirements	38
AA-7000	**Packaging, Shipping, Receiving, Storage, and Handling**	39
AA-7100	General	39
AA-7200	General Requirements	39

Copyright ASME International
Provided by IHS under license with ASME
No reproduction or networking permitted without license from IHS
Not for Resale

AA-7300	Packaging	40
AA-7400	Shipping	40
AA-8000	**Quality Assurance**	41
AA-8100	General	41
AA-8200	Identification and Control of Items	41
AA-8300	Quality Assurance Records	42
AA-9000	**Nameplates and Stamping**	43
AA-9100	General	43

Figures

AA-4355.3	Sine Beat Frequency and Amplitude	21
AA-4355.4	Sine Amplitude Decay Rate	21
AA-4356.4-1	Response Spectrum of Composite Excitation	23
AA-4356.4-2	Oscillations Per Beat	23
AA-6324.2	Acceptable and Unacceptable Weld Profiles	33
AA-8130	Hierarchy of Responsibility	42

Tables

AA-4212	Load Conditions	13
AA-4231	Deflection Limits	14
AA-4321	Plate- and Shell-Type Components: Primary Stress Allowables	16
AA-4323	Linear-Type Systems: Primary Stress Allowables	17

Nonmandatory Appendices

AA-A	Design and Qualification by Analysis	44
AA-B	Qualification by Testing	61
AA-C	Qualification by a Combination of Analysis and Testing	66
AA-D	Design of Ductwork by Analysis (Suggested Approach)	70

Copyright ASME International
Provided by IHS under license with ASME
No reproduction or networking permitted without license from IHS
Not for Resale

ARTICLE AA-1000
INTRODUCTION

AA-1100 SCOPE

This Code provides requirements for the performance, design, construction, acceptance testing, and quality assurance of equipment used as components in nuclear safety-related air and gas treatment systems in nuclear facilities.

AA-1110 PURPOSE

The purpose of this Code is to assure that equipment used in nuclear facilities for nuclear safety-related air and gas treatment systems is acceptable in all aspects of performance, design, construction, and testing.

AA-1120 APPLICABILITY

This Code applies only to individual components in a system. This Code does not cover any functional system design requirements or sizing of complete systems, or any operating characteristics of these systems. The responsibility for meeting each requirement of this Code shall be assigned to the Owner or assigned designee.

AA-1130 DEFINITIONS AND TERMS

Each Code section shall delineate the definitions and terms unique to that section. Definitions that have common application are listed in this section.

acceptance test: a test made upon completion of fabrication, installation, repair, or modification of a unit, component, or part to verify to the user or Owner that the item meets specified requirements.

active component: any component that must perform a mechanical motion or change of state during the course of accomplishing a nuclear safety-related function.

air density: 0.075 lb/ft^3 (1.201 kg/m^3) for standard air. This corresponds to air at a pressure of 29.92 in. Hg (760 mm Hg) at a temperature of 69.8°F (21°C) with a specific volume of 13.33 ft^3/lb (0.832 m^3/kg).

airflow (ACFM, SCFM, ACMS, SCMS): expressed in terms of CFM (cubic feet of air per minute). ACFM is a cubic foot of air with a density at actual existing conditions. SCFM (standard CFM) is a cubic foot of air with a standard density. ACMS and SCMS correspondingly apply to cubic meters per second under actual and standard conditions.

allowable deflection (d_{all}): the deflection resulting from each of the component loading conditions defined in AA-4212.

allowable stress value (S): the maximum stress limit to be used in the design.

assembly: two or more devices sharing a common mounting or supporting structure.

broadband response spectrum: a response spectrum that describes the motion indicating that multiple frequency excitation predominates.

Certificate of Compliance: a written statement, signed by a qualified party, attesting that the items or services are in accordance with specified requirements and accompanied by additional information to substantiate the statement.

Certificate of Conformance: a written statement, signed by a qualified party, certifying that items or services comply with specific requirements.

clean air system: an air cleaning system that is designed to maintain a definite level of air cleanliness within an enclosed working area.

component: a constituent of any referenced item. For example, an adsorber is a component of an air cleaning unit. An air cleaning unit and ducts are components of the air cleaning system.

Copyright ASME International
Provided by IHS under license with ASME
No reproduction or networking permitted without license from IHS
Not for Resale

component conditions: operating conditions of a component referred to as Service Level A, Service Level B, Service Level C, or Service Level D.

contained space: a building, building space, room, cell, glove box, or other enclosed volume in which air supply and exhaust are controlled.

contaminated exhaust system: an air cleaning system that is designed to remove harmful or potentially harmful particulates, mists, or gases from the air or gas exhausted from a contained space or process.

contaminated space: any enclosed or outdoor space with actual or potential airborne concentrations of hazardous or radioactive materials that may cause one or both of the following:

(a) unacceptable damage or dose to personnel and equipment occupying the space;

(b) contamination of other spaces.

contamination: any unwanted material in the air or on surfaces. For the purpose of this Code, contamination is usually assumed to be hazardous or radioactive.

contamination zone: an isolated area that is or which could become contaminated and that is designed to facilitate decontamination.

Contractor: any organization under contract for furnishing items or services to an organization operating in compliance with this Code. It includes the terms Vendor, supplier, subcontractor, and Fabricator, and subtier levels of these where appropriate, but excludes Material Suppliers and Material Manufacturers.

decibel (dB): a numerical expression of the relative loudness of a sound, which is a dimensionless quantity, used to express a level in logarithmic terms of the ratio of a quantity to a reference for sound pressure, which is 0.0002 dyne/cm^2; and for sound power that reference is 10^{-12} W.

decontamination: the removal of contamination from the air or surfaces.

design specification: a concise document defining technical requirements in sufficient detail to form the basis for a product, material, or process that indicates, when appropriate, the procedure or means that determines whether or not the given requirements are satisfied. The design specification includes requirements for performance and testing.

design working pressure: the maximum allowable working pressure for which a specific part of a system is designed.

device: an item, component, or accessory that is used in connection with, or as an auxiliary to, other items of equipment.

driver: a prime mover which produces rotational power input to the driven equipment. For the purpose of this Code, the term driver will be understood to be an AC induction motor. Other types of drivers are not covered by this section of the Code.

duct: an air or gas path enclosure.

effective width: a reduced width of plate that is effective in carrying loads after the local buckling stress has been exceeded. These effective plate regions are adjacent to stiffeners, or at corners where two or more joined plates stiffen one another. Forty to fifty plate thicknesses are normally considered as effective in acting with the stiffeners.

Engineer: as used in this document, the Engineer is the individual or organization designated by the Owner to be responsible for the original design or modification to the original design of air and gas treatment systems, and is responsible for determining the performance parameters for the system.

Engineered Safety Feature (ESF): a nuclear air treatment system, HVAC system, gas processing system, or a component that serves to control and limit the consequences of releases of energy and radioactivity in the event of occurrences as described in ANSI/ANS 51.1 and 52.1.

equipment: all HVAC components including ductwork, housings, plenums, fans, cleaning and refrigeration devices, dampers, and structural supports.

Fabricator: as used in this Code, this term refers to the organization which assembles, forms, or constructs components for use in air or gas treatment systems for the owner or his designee. Fabricators receive materials for fabrication from a Material Supplier and Material Manufacturer.

floor acceleration: the acceleration of a particular building floor (or equipment mounting) resulting from the motion of a given earthquake. The maximum floor acceleration is obtained from the floor response spectrum as the acceleration at high frequencies (in excess of 33 Hz) and is sometimes referred to as the ZPA (zero period acceleration).

full-load heat run: a test to determine the driver temperature rise. The driver must be run at full load until the driver temperature stabilizes. Driver winding tempera-

Copyright ASME International
Provided by IHS under license with ASME
No reproduction or networking permitted without license from IHS
Not for Resale

tures are then taken, or resistance of the windings is taken and the temperature calculated.

ground acceleration: the acceleration of the ground resulting from the motion of a given earthquake. The maximum ground acceleration is obtained from the ground response spectrum as the acceleration at high frequencies (in excess of 33 Hz).

harsh environment: an adverse environment caused by a postulated design accident event that results in more severe environmental conditions than would normally be expected had the accident event not occurred.

hold points: pre-established critical steps in manufacturing and testing that require the Manufacturer to advise the QAR (quality assurance representative) before proceeding further with the work, subject to the approval of the work up to that point by the QAR. The Manufacturer shall not proceed with the work past the hold point except by written agreement from the purchaser or authorized agent.

housing: a duct section that contains one or more components, each of which may be used for moving, cleaning, heating, cooling, humidifying, or dehumidifying the air or gas stream.

interspace: any space other than the contaminated space or the protected space where the air cleaning system or parts may be located. The interspace may be considered contaminated if its concentration of airborne contamination is higher than the concentration inside that part of the air cleaning system located within the interspace. The interspace may be considered clean if its concentration of airborne contamination is lower than the concentration inside the part of the air cleaning system located within the interspace.

leak tightness: the condition of a component, unit, or system where leakage through the pressure boundary is less than a specified value at a specified differential pressure.

low cycle fatigue: a progressive fracture or cumulative fatigue of a material that may occur in less than 1000 cycles due to a localized stress concentration.

Manufacturer's qualified standard or material: a standard or material used by a particular manufacturer which, by reasons of design or manufacturability, is not identifiable to an industry recognized standard. Where this type of standard or material is used, proof of acceptability will be demonstrated by the Manufacturer's design calculations or tests.

Material Manufacturer: as used in this Code, this term refers to an organization which certifies that metallic or nonmetallic material furnished is in compliance with requirements of the basic material specifications. In addition, the Material Manufacturer supervises and directly controls one or more of the operations that affect the material properties required by the material specification, and verifies the satisfactory completion of all the requirements of the material specification performed prior to that certification.

Material Supplier: as used in this Code, this term refers to an organization that supplies metallic or nonmetallic material produced and certified by Material Manufacturers, but does not perform any operations that affect the material properties required by the material specification.

maximum deflection value ($d_{max.}$): the maximum deflection, including equipment tolerances, that can be sustained without impairing system function.

narrow band response spectrum: a response spectrum that describes the motion indicating that a single frequency excitation predominates.

natural frequency: the frequency at which a linear–elastic structure will tend to vibrate once it has been set into motion. A structure can possess many natural frequencies. The lowest of these is called the fundamental natural frequency. Each natural frequency is associated with a mode shape of deformation.

nonsafety-related equipment: equipment that is not required to perform safety-related functions.

Nuclear Air Treatment System (NATS): A system designed to remove radioactive gaseous and particulate contaminants from a near-atmospheric pressure gas: stream without significantly altering the physical properties of the inert carrier gases. Such a system contains one or both of the high efficiency gas cleaning components referred to as HEPA filters and impregnated carbon (or inorganic silver-containing) adsorbers. These items are usually accompanied by one or more auxiliary air treatment components such as prefilters, afterfilters, heaters, coils, and moisture separators. Accessories such as dampers, ducts, plenums, and fans are included when they are within or are a part of a defined pressure boundary.

nuclear power plant operating modes: plant operations during any of the five conditions described in Section 3.0 of ANSI/ANS 51.1 and ANSI/ANS 52.1.

nuclear power plant process systems: systems that are integral parts of a nuclear power plant, comprising

Copyright ASME International
Provided by IHS under license with ASME
No reproduction or networking permitted without license from IHS
Not for Resale

components that may be provided to perform a specific function for normal operation of the plant, mitigation of the consequences of design basis events or accidents, or safe shutdown of the plant following a design basis event or accident.

nuclear safety function: a term applying to any component, system, or structure performing a nuclear safety function that is necessary to ensure:

(a) the integrity of the reactor coolant pressure boundary or primary coolant boundary;

(b) the capability to shut down the reactor and maintain it in a safe shutdown condition;

(c) the capability to prevent or mitigate the consequences of plant conditions that could result in potential offsite exposures that are comparable to the guideline exposures of 10 CFR 100.

nuclear safety related: a term applying to:

(a) structures, systems, or components designed to perform a nuclear safety function;

(b) drawings, specifications or procedures, analyses, and other documents used to determine or describe parameters affecting structures, systems, or components that are designed to perform a nuclear safety function; or

(c) services to design, purchase, fabricate, handle, ship, store, clean, erect, install, test, operate, maintain, repair, refuel, and modify structures, systems, or components that are designed to perform a nuclear safety function.

octave: the interval between any two frequencies having the ratio 2:1.

operating basis earthquake (OBE): the earthquake that, considering the regional and local geology and seismology and specific characteristic of local subsurface material, could reasonably be expected to affect the plant site during the operating life of the plant. It is that earthquake which produces the vibratory ground motion for which those nuclear safety-related features of the plant necessary for subsequent operation without undue risk to the health and safety of the public are designed to remain functional.

Owner: the organization legally responsible for the construction and/or operation of a nuclear facility including but not limited to one who has applied for, or who has been granted, a construction permit or operating license by the regulatory authority having lawful jurisdiction.

performance test: a test made on an individual production item or lot of a product to verify its performance in accordance with specified requirements.

periodic maintenance: regularly scheduled equipment upkeep.

plenum: a section of duct in the air flow path that has a sufficient cross-sectional area and depth to cause substantial reduction in flow velocities. The plenum may contain flow adjustment devices and may collect and distribute several air or gas streams.

protected space: any enclosed or outdoor space that has its concentrations of airborne toxic or radioactive materials limited to acceptable levels by action of a cleaning system.

quality control administration: the management and documentation that assures that the specified quality control examination is performed.

quality control examination: the comparison of the physical, chemical, or other characteristics of a material, component, part, or appurtenance to specified acceptance standards.

resonance: a structural response to a dynamic input, characterized by vibration of the structure at its natural frequency.

response spectrum: a plot of the maximum response of single degree of freedom bodies, at a damping value expressed at a percent of critical damping of different natural frequencies, when these bodies are rigidly mounted on the surface of interest (that is, on the ground for the ground response spectrum or on the floor for the floor response spectrum) when that surface is subjected to the motion of a given earthquake as modified by an intervening structure.

required response spectrum (RRS): the response spectrum issued by the user or his agent as part of his specification for proof testing, or artificially created to cover future applications. The RRS constitutes a requirement to be met.

safe shutdown earthquake (SSE): the earthquake that is based upon evaluation of the maximum earthquake potential considering regional and local geology and seismology and specific characteristics of local subsurface material. It is the earthquake that produces the maximum vibratory ground motion for which nuclear safety-related structures, systems and components are designed to perform their nuclear safety function.

safety-related equipment: equipment for air and gas treatment systems or equipment that is essential to:

Copyright ASME International
Provided by IHS under license with ASME
No reproduction or networking permitted without license from IHS
Not for Resale

(a) the capability to shut down the reactor and maintain it in a safe shutdown condition; and

(b) the capability to prevent or mitigate the consequences of accidents that could result in offsite exposures in excess of the limits stated in 10 CFR 100.

seismic/nonsafety-related equipment: equipment that is not required to perform a safety function during or following plant Service Level B, C, or D, but that must retain its structural integrity so as not to damage, degrade, or interfere with the performance of safety functions by any safety-related equipment or components.

service factor: the allowable loading above the nameplate rating at which the driver may be operated without exceeding the designated temperature rise of the driver. Service factor denotes the safety margin built into a driver.

single failure: a random occurrence that results in loss of capability of a component to perform its intended nuclear safety function. Multiple failures resulting from a single occurrence are considered to be a single failure.

NOTE: Fluid and electrical systems are considered to be designed against single failure if neither a single failure of any active component (assuming passive components function properly) nor a single failure of any passive component (assuming active components function properly) result in a loss of the capability of the system to perform its safety function.

sound: an alteration in pressure, stress, particle displacement, and particle velocity, which is propagated in an elastic material, or the superposition of such propagated alternations.

sound power: the total energy radiated by a source per unit of time.

sound power level (L_w): the amount of power radiated from a noise source relative to a reference power level. In decibels, it is 10 times the logarithm to the base 10 of the ratio of the acoustic power in watts to the reference power. The reference power is 10^{-12} W.

$$L = 10 \log W/10^{-12}$$

stiffeners: internal or external members used to reinforce duct, housing, and plenums, which may be used to transmit loads and reactions to supports.

structural analysis report: a document which, through the use of applicable and recognized mathematical techniques, verifies that the equipment under consideration possesses sufficient structural integrity to withstand the specified combination of normal, abnormal, and design basis event loads. Acceptance criteria shall be defined by the design specification.

structures and supports: the entire range of the structural elements used that fill either or both functions of carrying the weight of components or providing them with structural stability. The term includes hangers, which are generally considered to be those elements that carry the weight from above with the supporting members being mainly in tension. Likewise, the term includes supports that carry the weight from below with the supporting members being mainly in compression. The term also includes spring-loaded sway braces, snubbers, and other devices used to provide structural stability during any of the specified operating conditions.

shutdown: the procedure of making a reactor subcritical or the state of a reactor in a subcritical condition.

test response spectrum (TRS): the response that is constructed using analysis or derived using spectrum analysis equipment based on the actual motion of the test machine.

total enclosed, air over (TEAO): a driver intended for cooling by a minimum flow of air over the driver.

water gage: the measure of pressure expressed as height of water column in inches or millimeters.

witness points: operations in manufacturing and testing that require the Manufacturer to advise the QAR before proceeding further so that the subsequent operation may be witnessed by the QAR.

Copyright ASME International
Provided by IHS under license with ASME
No reproduction or networking permitted without license from IHS
Not for Resale

ARTICLE AA-2000
REFERENCED DOCUMENTS

Each Code section shall delineate the referenced documents applicable to that section. References that have common application are listed in this section. Unless otherwise shown, the latest edition and addenda are applicable.

ANSI/ASME N45.2.2-1978, Packaging, Shipping, Receiving, Storage, and Handling of Items of Nuclear Power Plants (During the Construction Phase)

ANSI/ASME NQA-2-1983, Quality Assurance Requirements for Nuclear Power Plants

ASME B31.1-1988, Power Piping

ASME NQA-1-2000 Edition, Quality Assurance Program Requirements for Nuclear Facilities

Boiler and Pressure Vessel Code, 1983 Edition ("the ASME Code")
- Section II, Material Specifications
- Section III, Nuclear Power Plant Components
- Section V, Nondestructive Examination
- Section IX, Welding and Brazing Qualifications

Publisher: American Society of Mechanical Engineers (ASME International), Three Park Avenue, New York, NY 10016-5990; Order Department: 22 Law Drive, Box 2300, Fairfield, NJ 07007-2300

ANSI N101.2-1972, Protective Coatings (Paints) for Light Water Nuclear Reactor Containment Facilities

ANSI N101.4-1973, Quality Assurance for Protective Coatings Applied to Nuclear Facilities

ANSI N512-1974, Protective Coatings (Paints) for the Nuclear Industry

ANSI/AFBMA 9-1978, Load Ratings and Fatigue Life for Ball Bearings

ANSI/AFBMA 11-1978, Load Ratings and Fatigue Life for Roller Bearings

ANSI/ANS 51.1-1983, Nuclear Safety Criteria for the Design of Stationary Pressurized Water Reactor Plants

ANSI/ANS 52.1-1983, Nuclear Safety Criteria for the Design of Stationary Boiling Water Reactor Plants

ANSI/ASC Z49.1-1983, Safety in Welding and Cutting

Publisher: American National Standards Institute (ANSI), 25 West 43rd Street, New York, NY 10036

ANSI/AWS A2.4-79, Symbols for Welding and Nondestructive Testing, Including Brazing

ANSI/AWS A3.0-84, Welding Terms and Definitions

ANSI/AWS A5.8-81, Specification for Brazing Filler Metal

ANSI/AWS C3.3-80, Recommended Practice for Design, Manufacture, and Inspection of Critical Brazed Components

ANSI/AWS D1.1-84, Structural Welding Code, Steel

ANSI/AWS D1.3-81, Specification for Welding Sheet Steel and Structures

ANSI/AWS D9.1-84, Specification for Welding of Sheet Metal

AWS C1.1-66, Recommended Practice for Resistance Welding

AWS C1.3-70, Recommended Practice for Resistance Welding Coated Low Carbon Steels

Publisher: American Welding Society (AWS), 550 NW Le June Road, Miami, FL 33126

ANSI/IEEE 323-1983, Standard for Qualifying Class 1E Equipment for Nuclear Power Generating Stations

ANSI/IEEE 334-1974, Standard for Type Tests of Continuous Duty Class 1E Motors for Nuclear Power Generation Stations

ANSI/IEEE 344-1975, Recommended Practice for Seismic Qualifications of Class 1E Equipment for Nuclear Power Generating Stations

ANSI/IEEE 627-1980, Standard for Design Qualification of Safety Related Equipment Used in Nuclear Power Generating Stations

IEEE 112A-1978, Testing Procedures for Polyphase Motors and Generators

Publisher: Institute of Electrical and Electronics Engineers (IEEE), 445 Hoes Lane, Piscataway, NJ 08854

Copyright ASME International
Provided by IHS under license with ASME
No reproduction or networking permitted without license from IHS
Not for Resale

ASTM A 370-77, Methods and Definitions for Mechanical Testing of Steel Products

ASTM D 3843-80, Standard Practice for Quality Assurance for Protective Coatings Applied to Nuclear Facilities

ASTM D 3911-80, Standard Method for Evaluating Coatings Used in Light-Water Nuclear Power Plants at Simulated Loss of Coolant Accident (LOCA) Condition

ASTM D 3912-80, Standard Method for Chemical Resistance of Coatings Used in Light-Water Nuclear Power Plants

ASTM E 165-75, Recommended Practices for Liquid Penetrant Inspection Method

Manual of Coating Work for Light-Water Nuclear Power Plant Primary Containment and Other Safety-Related Facilities, Chapter 8, First Edition, 1979

Publisher: American Society for Testing and Materials (ASTM), 100 Barr Harbor Drive, West Conshohocken, PA 19428-2959

Manual of Steel Construction, Eighth Edition, 1980

Publisher: American Institute of Steel Construction (AISC), One East Wacker Drive, Chicago, IL 60601-2001

NACE 6F166, Recommended Practices for Inspection of Linings on Steel and Concrete, July 1966

Publisher: National Association of Corrosion Engineers (NACE International), P.O. Box 201009, Houston, TX 77216-1009

NEMA MG-1-1978, Motors and Generators

Publisher: National Electrical Manufacturers Association (NEMA), 1300 North 17th Street, Rosslyn, VA 22209

Nuclear Construction Issues Group (NCIG)

NCIG-01, Visual Weld Acceptance Criteria for the Structural Welding at Nuclear Power Plants, Revision 2, May 7, 1985

NCIG-03, Training Manual for Inspectors of Structural Welds at Nuclear Power Plants Using the Acceptance Criteria of NCIG-01, Revision H, June 7, 1985

SSPC-SP10, Near-White Blast Cleaning

Publisher: The Society for Protective Coatings (SSPC), 40 24th Street, Pittsburgh, PA 15222-4656

Recommended Practice No. SNT-TC-1A-80

Publisher: American Society for Nondestructive Testing (ASNT), 1711 Arlingate Lane, P.O. Box 28518, Columbus, OH 43228-0518

10 CFR, Code of Federal Regulations, Title 10; Energy, Parts 0 to 199

Publisher: Superintendent of Documents, U.S. Government Printing Office, Washington, DC 20402-9325

Copyright ASME International
Provided by IHS under license with ASME
No reproduction or networking permitted without license from IHS
Not for Resale

ARTICLE AA-3000
MATERIALS

Each section of this Code delineates material requirements applicable to that section. In addition, the materials listed in Section III of the ASME Boiler Pressure Vessel Code (hereafter referred to as the ASME Code) are acceptable materials.

The ASME or ASTM numbers for acceptable materials designate a chemical composition and a material thickness limit. A grade designation is usually required to determine the minimum strength of the material. If the specific grade material has an assigned minimum yield and tensile strength, these values shall be used for design purposes. If values have not been established and assigned, then tests in accordance with the procedures outlined in ASTM A 370 shall be performed to obtain these values. Results of mill-certified tests performed as above designating these values shall be calculated by the procedures in Article AA-4000.

Copyright ASME International
Provided by IHS under license with ASME
No reproduction or networking permitted without license from IHS
Not for Resale

ARTICLE AA-4000
STRUCTURAL DESIGN

AA-4100 SCOPE

This article contains the minimum requirements for structural design of equipment for which this Code is applicable. Nonmandatory Appendices AA-A through AA-D contain guidance on implementing these rules.

AA-4110 ENVIRONMENTAL QUALIFICATION

Electrical equipment shall be qualified to meet the environmental conditions specified for the equipment in Divisions II and III of this Code.

AA-4200 DESIGN CRITERIA

This subarticle contains the load, stress, deflection, and other criteria for the design of equipment. Verification of equipment design shall be based on calculations or tests, or a combination of both.

AA-4210 LOAD CRITERIA

All loads as specified in the design specification or the applicable equipment section of this Code shall be taken into account in designing equipment and shall include, but not be limited to, the loads listed in AA-4211.

AA-4211 Loads

additional dynamic loads (ADL): loads resulting from system excitation due to structural motion caused by safety relief-valve actuation and other hydrodynamic loads due to design basis accident (DBA), small pipe break accident (SBA), and intermediate pipe break accident (IBA); also, liquid slosh in tanks and vessels and mechanical shock loads.

constraint of free end displacement loads (T): loads caused by constraint of free end displacement that results from thermal or other movements.

dead weight (DW): the weight of equipment or ductwork including supports, stiffeners, insulation, all internally or externally mounted components or accessories, and any contained fluids.

design pressure differential (DPD): dynamic pressure loads resulting from a DBA, IBA, or SBA.

design wind (W): loads due to design hurricane, design tornado, or other abnormal meteorological condition that could occur infrequently.

external loads (EL): applied loads caused by attached piping, accessories, or other equipment.

fluid momentum loads (FML): loads other than those listed here, such as the momentum and pressure forces due to fluid flow.

live loads (L): loads occurring during construction and maintenance and loads due to snow, ponded water, and ice.

normal loads (N): loads consisting of normal operating pressure differential, system operating pressure transients, dead weight, external loads, and inertia loads.

$$N = \text{NOPD} + \text{SOPT} + \text{DW} + \text{EL} + \text{FML}$$

normal operating pressure differential (NOPD): the maximum positive or negative pressure differential that may occur during normal plant operation, including plant startup and test conditions; included are pressures resulting from normal airflow and damper or valve closure.

seismic loads: loads that are the result of either an operating basis earthquake (OBE) or safe shutdown earthquake (SSE). Both orthogonal components of the horizontal seismic excitation are applied simultaneously

Copyright ASME International
Provided by IHS under license with ASME
No reproduction or networking permitted without license from IHS
Not for Resale

TABLE AA-4212
LOAD CONDITIONS

Component Service Level	Load Combination
A	$N + T$ $N + L$
B	$N + W + T$ and N + OBE + T + ADL
C [Note (1)]	$N + W + T$ and N + SSE + ADL
D	N + DPD + SSE + ADL

GENERAL NOTES:
(a) Constraint of free end displacement loads, external loads, additional dynamic loads, and fluid momentum loads are associated with the service level of concern and are not, in general, the same for all service levels.
(b) If particular equipment design criteria require additional load combinations, those requirements shall be stated in the equipment design specification.

NOTE:
(1) The SSE loading in Service Level C may be replaced with the OBE loading if component operability is required during or after a seismic event and operability can be assured by test or analysis.

with the vertical seismic loading. These seismic forces are applied in the directions that produce worst-case stresses and deflections.

system operational pressure transient (SOPT): overpressure transient loads due to events such as rapid damper, plenum or housing door, and valve closure, or other normal loads that result in a short duration pressure differential.

AA-4212 Load Combinations

The load combinations to be considered for equipment design are given in Table AA-4212.

AA-4213 Service Conditions

The equipment design specification or the applicable equipment section of this Code shall identify the loads and shall designate the appropriate design and service limits for design of equipment systems. The design and service loads shall be established considering all plant and system operating conditions anticipated or postulated to occur during the intended service life of the equipment systems.

AA-4214 Design and Service Limits

AA-4214.1 Design Limits. The limits for design loading are designated as design limits.

AA-4214.2 Service Limits. The equipment design specification may designate service limits as defined in (a) through (d) below.

(a) Level A Service Limits. Level A service limits are those sets of limits that must be satisfied for all loads identified in the equipment design specification to which the equipment may be subjected in the performance of its specified normal service function.

(b) Level B Service Limits. Level B service limits are those sets of limits that must be satisfied for all loads identified in the equipment design specification for which these service limits are designated. Equipment must withstand load combinations specified for Level B service limits without damage that would require repair.

(c) Level C Service Limits. Level C service limits are those sets of limits that must be satisfied for all loads identified in the equipment design specification for which these service limits are designated. These sets of limits permit large deformations in areas of structural discontinuity.

(d) Level D Service Limits. Level D service limits are those sets of limits that must be satisfied for all loads identified in the equipment design specification for which these service limits are designated. These sets of limits permit gross and general deformations with some consequent loss of dimensional stability and permit damage requiring repair, which may require removal of the component from service.

AA-4220 STRESS CRITERIA

AA-4221 Stress Limits

The maximum normal stress limits for the service levels defined in AA-4212 are stipulated in AA-4320 and in AA-4330.

AA-4230 DEFLECTION CRITERIA

AA-4231 Deflection Limits

The maximum deflection $d_{max.}$, including all equipment tolerances, that may be sustained so that equipment function is not impaired shall be determined. This maximum deflection may be defined in the equipment design specification or the applicable equipment section of this Code. Alternatively, it may be determined by analysis or test, or both. The allowable deflections for

Copyright ASME International
Provided by IHS under license with ASME
No reproduction or networking permitted without license from IHS
Not for Resale

TABLE AA-4231
DEFLECTION LIMITS

Service Level	Deflection Limit
A [Note (1)]	$d_{all} \le 0.6\ d_{max.}$
B [Note (1)]	$d_{all} \le 0.6\ d_{max.}$
C [Note (2)]	$d_{all} \le 0.9\ d_{max.}$
D [Note (2)]	$d_{all} \le 0.9\ d_{max.}$

GENERAL NOTES:
(a) If particular equipment design criteria require more restrictive limits on deflections, those requirements will be stated in the applicable equipment section of this Code.
(b) Deflections shall be limited to prevent transmission of excessive load to other components such as filter frames, coils, bearings, and access doors.

NOTES:
(1) Deflections shall be limited to values that prevent buckling in primary load carrying elements.
(2) Deflections shall be limited to values as described in AA-4323.

the load combinations of AA-4212 are as shown in Table AA-4231.

AA-4240 OTHER CRITERIA

AA-4241 Vibration Isolation

Types of vibration isolation devices and their efficiencies shall be as specified in the equipment design specification or the applicable equipment section of this Code. Vibration isolation devices shall be designed with adequate restraints to resist the loads generated under any service level.

AA-4242 Provisions for Relative Movement

Consideration shall be given to the relative motion between equipment systems and their supporting elements, as this will affect ability to function. When clearances or travel ranges, or both, are required to accommodate movements of equipment systems and their supporting elements, sufficient design margins shall be introduced to allow for fabrication and installation tolerances.

AA-4243 Structural Attachments

Structural attachments may be of either the integral or nonintegral type, as defined in AA-4243.1 and AA-4243.2.

AA-4243.1 Integral Attachments

(a) Integral attachments are those fabricated as an integral part of the equipment. Consideration shall be given to local stresses induced in equipment by integral attachments.

(b) Integral attachments used as part of an assembly for the support or guiding of the equipment may be welded directly to the equipment, provided the design is adequate for all applicable service conditions and load combinations set forth in AA-4212 and the requirements of AA-6300 are met.

AA-4243.2 Nonintegral Attachments. Nonintegral attachments are those that are bolted, pinned, clamped to, or bear on the equipment. Consideration shall be given to the mechanical connection and local stresses induced in the equipment by nonintegral attachments.

AA-4300 DESIGN OF EQUIPMENT SYSTEMS AND THEIR SUPPORTING ELEMENTS

AA-4310 GENERAL REQUIREMENTS

AA-4311 Acceptability

The requirements for acceptability of the design of equipment systems and their supports are given in AA-4311.1 through AA-4311.3.

AA-4311.1 The design shall be such that the allowable stresses will not exceed the limits given in this subarticle. Design stress values S, yield strength S_y, and ultimate strength S_u are given in Article AA-3000 references. These values form the basis for determining allowable stress, depending on analysis type.

AA-4311.2 For self-limiting loads under Service Level D, localized material yielding is permitted, provided that yielding does not form a mechanism that would result in collapse of the structure.

AA-4311.3 For configurations where compressive stresses occur, critical buckling shall be considered.

AA-4312 Basis for Determining Stresses in Design by Analysis

The theory of failure for combining stresses for the design of equipment systems and their supporting elements used in the rules of this subarticle is the maximum stress theory. In the maximum stress theory, the controlling stresses are the membrane and bending stresses.

AA-4312.1 Plate- and Shell-Type Components: Analysis Procedures. The analysis procedures for plate- and shell-type systems shall be in accordance with the

Copyright ASME International
Provided by IHS under license with ASME
No reproduction or networking permitted without license from IHS
Not for Resale

rules of AA-4320. Consideration shall be given to the governing mode of failure. Several analyses that might include, but are not necessarily limited to, the following, may be required to determine the limiting case:

(a) elastic analysis based on maximum stress theory;

(b) elastic analysis based on maximum deflection;

(c) elastic analysis based on allowable buckling stress (see AA-4323).

AA-4312.2 Linear-Type Systems and Supports: Analysis Procedures. Elastic analysis based on maximum stress theory in accordance with the rules of AA-4330 shall be used for the design of linear-type systems.

AA-4312.3 Applicability of Mathematical Analysis. The design procedure that may be used shall be either analysis or test, or a combination, and is dependent upon the nature of the structural system under consideration. The choice shall be based on the practicality of the method for the type, size, shape, and complexity of the equipment, and the reliability of the conclusions. The analysis method is not recommended for complex equipment that cannot be modeled to correctly describe the static and dynamic structural characteristics of the equipment. Furthermore, analysis without testing may be acceptable only if structural integrity alone can assure the design intended function. If mathematical analysis is inadequate for all or part of the design verification, a suitable test program shall be implemented in accordance with the rules of AA-4350.

AA-4313 Terms Related to Design by Analysis

The terms used in the design of equipment systems and their supports are shown in AA-4313.1 through AA-4313.11.

AA-4313.1 Gross Structural Discontinuity. Gross structural discontinuity is a geometric or material discontinuity that affects the stress or strain distribution throughout the entire thickness of the member. Gross discontinuity-type stresses are those portions of the actual stress distributions that produce net bending and membrane force resultants when integrated through the thickness. Examples of gross structural discontinuities are junctions between parts of different diameters or thicknesses, and flange-to-shell junctions.

AA-4313.2 Normal Stress. Normal stress is the component of stress normal to the plane of reference, also referred to as the direct stress. Usually the distribution of normal stress is not uniform throughout the thickness of a part. Therefore, the normal stress is considered to be made up of two components, one of which is uniformly distributed and equal to the average value of stress across the thickness under consideration, and the other of which varies from this average value with the location across the thickness.

AA-4313.3 Membrane Stress. Membrane stress is the component of normal stress that is uniformly distributed and equal to the average of stress across the thickness of the section under consideration.

AA-4313.4 Bending Stress. Bending stress is the variable component of normal stress described in AA-4313.2. The variation may or may not be linear across the thickness.

AA-4313.5 Shear Stress. Shear stress is the component of stress tangent to the plane of reference.

AA-4313.6 Primary Stress. Primary stress is any normal stress or a shear stress developed by an imposed loading that is necessary to satisfy the laws of equilibrium of external and internal forces and moments. The basic characteristic of a primary stress is that it is not self-limiting. Primary stresses that considerably exceed the yield strength will result in failure or, at least, in gross distortion. A general primary membrane stress is one that is so distributed in the structure that no redistribution of load occurs as a result of yielding. An example of primary stress is general membrane stress in a circular cylindrical shell due to distributed live loads.

AA-4313.7 Secondary Stress. Secondary stress is a normal stress or a shear stress developed by the constraint of adjacent material or by self-constraint of the structure. The basic characteristic of a secondary stress is that it is self-limiting. Local yielding and minor distortions can satisfy the conditions that cause the stress to occur, and failure from one application of the stress is not to be expected. An example of secondary stress is bending stress at a gross structural discontinuity.

AA-4313.8 Peak Stress. A peak stress includes an increment added to primary or secondary stresses by a stress riser, such as a notch.

AA-4313.9 Free End Displacement. Free end displacement consists of the relative motions that would occur between an attachment and connected structure or equipment if the two members were separated. Examples of such motions are those that would occur because of relative thermal expansion of ductwork, piping, equipment, and equipment supports, or because of movements imposed upon the equipment by sources other than the piping.

AA-4313.10 Limit Analysis. Limit analysis is a method used to compute the maximum load or combina-

Copyright ASME International
Provided by IHS under license with ASME
No reproduction or networking permitted without license from IHS
Not for Resale

tion of loads a structure made of ideally plastic (non-strain hardening) material can carry. Among the methods used in limit analysis is a technique that assumes elastic, perfectly plastic, material behavior, and a constant level of moment or force in those redundant structural elements in which the level of membrane yield, plastic hinge formation, or critical buckling load in the member has been reached. Any increase in load must be accompanied by a stable primary structure until a failure mechanism defined by the lower bound theorem of limit analysis is reached in the primary structure.

AA-4313.11 Collapse Load: Lower Bound. The collapse load is the load at which deformations of an ideally plastic structure increase without bound. If, for a given load, any system of stresses can be found that everywhere satisfies equilibrium and nowhere exceeds the material yield strength, the load is at or below the collapse load. This is the lower bound theorem of limit analysis, which permits calculation of a lower bound to the collapse load.

TABLE AA-4321
PLATE- AND SHELL-TYPE COMPONENTS: PRIMARY STRESS ALLOWABLES

	Stress Category	
Service Level	General Membrane σ_1 [Note (1)]	Membrane and Bending $\sigma_1 + \sigma_2$ [Note (2)]
A	1.0 S [Note (3)]	1.5 S
B	1.0 S	1.5 S
C	1.2 S	1.8 S
D	Lesser of 1.5 S or 0.4S_u [Note (3)]	Lesser of 2.25 S or 0.6 S_u

NOTES:
(1) General membrane stress σ_1 is the average membrane stress across the solid section, excluding discontinuities and concentrations.
(2) Bending stress σ_2 is the linearly varying portion of stress across the solid section under consideration, excluding effects of discontinuities and concentrations.
(3) S = design stress
S_u = ultimate stress
See Article AA-3000 references.

AA-4320 DESIGN VERIFICATION OF PLATE- AND SHELL-TYPE COMPONENTS AND THEIR SUPPORTING ELEMENTS

AA-4321 Stress Analysis

A detailed stress analysis of all major structural plate- and shell-type components and their supporting elements shall be prepared in sufficient detail to show that each of the stress limitations of Table AA-4321 is satisfied when the component and its supporting elements are subjected to the load combinations of AA-4212.

AA-4322 Stress Limits

AA-4322.1 Design Loads. The maximum normal stress limits are satisfied for the design loading combinations as stipulated in AA-4212, or as stated in the equipment design specification if the requirements of eqs. (1) and (2) are met (see AA-4322.2 for service limits associated with the service levels of AA-4212).

$$\sigma_1 \le 1.0S \quad (1)$$

$$\sigma_1 + \sigma_2 \le 1.5S \quad (2)$$

where

S = design stress value from Article AA-3000 references
σ_1 = membrane stress
σ_2 = bending stress

AA-4322.2 Service Limits. The maximum normal stress limits for Service Levels A through D are as stipulated below.

(a) Level A Service Limits. Level A service limits are satisfied for the service conditions of AA-4214.2(a) for which these limits are designated in the equipment design specification if the requirements of eqs. (1) and (2) are met.

(b) Level B Service Limits. Level B service limits are satisfied for the service conditions of AA-4214.2(b) for which these limits are designated in the equipment design specification if the requirements of eqs. (1) and (2) are met.

(c) Level C Service Limits. Level C service limits are satisfied for the service conditions of AA-4214.2(c) for which these limits are designated in the design specification if the requirements of eqs. (1) and (2) are not exceeded by more than 20%.

(d) Level D Service Limits. Level D service limits are satisfied for the service conditions of AA-4214.2(d) for which these limits are designated in the equipment design specification if the requirements of eqs. (3) and (4) are met.

Copyright ASME International
Provided by IHS under license with ASME
No reproduction or networking permitted without license from IHS
Not for Resale

TABLE AA-4323
LINEAR-TYPE SYSTEMS: PRIMARY STRESS ALLOWABLES

Service Level	Stress Category: General Load Induced Stress	Stress Category: Stress From Constraint of Free End Displacements
A	$\bar{S}$ [Note (1)]	$3\bar{S}$
B	$\bar{S}$	$3\bar{S}$
C [Note (2)]	$1.5\,\bar{S}$	NA
D [Note (2)]	$\frac{1.2\,S_y}{F_t}(\bar{S})$ not to exceed $\frac{0.7\,S_u}{F_t}(\bar{S})$	NA

GENERAL NOTE: NA = not applicable

NOTES:
(1) $\bar{S}$ refers to the primary allowable stresses developed in the ASME Code, Section III, Appendix XVII, XVII-2211 through XVII-2214.
S_y = yield stress
S_u = ultimate stress
F_t = allowable tensile stress
Values are found in Article AA-3000 references.
(2) Loads shall not exceed 0.67 times the critical buckling load of the primary framing system.

$$\sigma_1 \le \text{lesser of } 1.5S \text{ or } 0.4S_u \quad (3)$$

$$\sigma_1 + \sigma_2 \le \text{lesser of } 2.25S \text{ or } 0.6S_u \quad (4)$$

where

S_u = specified minimum ultimate tensile strength of material found in Article AA-3000 references.

Other terms are as defined in AA-4322.1.

AA-4323 Buckling and Stress Limits Set by Buckling Stress Criteria

The allowable deflection due to compressive loads shall be limited to prevent postbuckling failure in the plate. Buckling stresses shall be verified against Service Level D allowable values of Table AA-4323.

AA-4323.1 Local Yielding and Buckling. The maximum stress for the load-carrying capacity of plates shall be based on the postbuckling behavior of the plate.

(a) When buckling governs, deflections shall be computed based on effective width concept.

(b) When local yielding governs, deflections shall be computed based on the average or reduced section.

AA-4323.2 Lateral Buckling. Critical lateral buckling stresses shall be computed based on moment resisting capacity.

AA-4323.3 Flexural Buckling. Maximum stresses shall be computed based on stability considerations.

AA-4323.4 Torsional Buckling. Maximum shear stresses shall be computed based on the torsional capacity of the section.

AA-4330 DESIGN VERIFICATION OF LINEAR-TYPE SYSTEMS BY ANALYSIS

AA-4331 Stress Analysis

A detailed stress analysis of all major linear-type equipment shall be prepared in sufficient detail to show that each of the stress limitations of AA-4332 is satisfied when the equipment is subjected to the load combinations of AA-4212.

AA-4332 Stress Limits

AA-4332.1 Design Level A and Level B Limits. Design Level A and Level B limits are identical and are given in the ASME Code, Section III, Appendix XVII. The allowable stress for the combined mechanical loads and effects that result from constraint of free end displacements (see AA-4313.6), but not thermal or peak stresses, shall be limited to three times the stress limits of the ASME Code, Section III, Appendix XVII, XVII-2000.

AA-4332.2 Level C Limits. The stress values for Level C limits may be increased by 50% over the values given in the ASME Code, Section III, Appendix XVII, XVII-2000. Constrained free end displacement and differential support motion effects need not be considered. Primary stresses shall not exceed 0.67 times the critical buckling strength of the primary framing system. In such analysis, local instabilities, such as compression, flange, and web buckling shall be evaluated. In addition, overall buckling in compression members shall be evaluated.

AA-4332.3 Level D Limits. If the equipment design specification specifies service loads for which Level D limits are designated, the following rules shall be used in evaluating them independently of all other design and service loadings:

(a) The allowable stresses presented in the ASME Code, Section III, Appendix XVII, XVII-2000, may be increased by a factor of 1.2 (S_y/F_t), but not to exceed

Copyright ASME International
Provided by IHS under license with ASME
No reproduction or networking permitted without license from IHS
Not for Resale

a factor of 0.7 (S_u/F_t), where S_y is the specified minimum yield strength of the material, F_t is the allowable tensile stress, and S_u is the ultimate tensile stress.

(b) Primary stresses shall not exceed 0.67 times the critical buckling strength of the primary framing system. In such analysis, local instabilities such as compression, flange, and web buckling shall be evaluated. In addition, overall buckling in compression members shall also be evaluated.

AA-4340 FUNCTIONABILITY REQUIREMENTS

The stress limits specified by this Code do not assure that the equipment will be able to perform the required safety function. Functionability is assured by following the rules stipulated below.

AA-4341 Functionability of Mechanical Systems

The methods of AA-4341.1, AA-4341.2, or AA-4341.3 shall be used to assure operability of mechanical systems and their supporting elements.

AA-4341.1 The Service Levels C and D stress limits of AA-4322 and AA-4332 shall be reduced to the Levels B and C stress limits, respectively.

AA-4341.2 The deflections at all critical locations shall be calculated and assured to be within the allowable values in AA-4230. These critical locations shall be given in the applicable equipment section of this Code or by the equipment design specification, or by both. Furthermore, for equipment where buckling is of concern, deflection checks shall be performed for the component or support load condition as specified in AA-4323.

AA-4341.3 The functionability of the equipment shall be verified experimentally.

AA-4342 Functionability of Electrical Systems

Operability of electrical systems and their supporting elements shall be assured using the method outlined in AA-4350.

AA-4350 DESIGN VERIFICATION BY TESTING

AA-4351 General

Design verification by testing shall be in accordance with the rules of this subarticle. Seismic tests are to be performed by subjecting the equipment to vibratory motion that conservatively simulates that postulated at the equipment mounting during the OBE and an SSE. In addition, other loads that may occur concurrently with the seismic event shall be accounted for (see AA-4212). The rules of this subarticle are consistent with and complementary to ANSI/IEEE 344.

AA-4351.1 Equipment Mounting. The equipment to be tested shall be mounted on the test machine in a manner that simulates the intended service mounting. The mounting method shall be the same as that recommended for actual service, which includes the recommended bolt size and configuration, weld pattern, and type. The effect of all attached hardware such as electrical connections, conduit, sensing lines, piping, and ductwork shall be considered. The method of mounting the equipment to the test machine shall be documented and shall include a description of any interposing fixtures and connections. Effect of such fixtures and connections shall be evaluated if they are only used during qualification and not for inservice mounting. Equipment orientation shall be along the major and minor axes for each test condition unless specified otherwise by the equipment design specification or the applicable equipment section of this Code.

AA-4351.2 Equipment Monitoring. Sufficient monitoring equipment shall be used to evaluate the performance of the safety function of the equipment before, during, and after the test. In addition, sufficient vibration monitoring equipment shall be used to allow determination of the applied vibration levels. In addition to the monitoring of the test machine, as many points of the equipment shall be monitored as needed to provide information for evaluating the test results.

AA-4351.3 Exploratory Tests. Exploratory vibration tests required for all qualification tests except multiple frequency tests (see AA-4356) shall be run on equipment to aid in the determination of the test method that will best qualify or determine the dynamic characteristics of the equipment. As per AA-4352, the type of test required to qualify equipment for various applications shall be dependent on the nature and dynamic characteristics of the equipment and the required response spectrum (RRS). If it can be shown that the equipment is not in resonance at any frequency within the frequency

Copyright ASME International
Provided by IHS under license with ASME
No reproduction or networking permitted without license from IHS
Not for Resale

range of interest, it shall be considered to act as a rigid body and analyzed or tested accordingly. If there are resonances, one of the various methods of AA-4352 or other justifiable methods shall be used.

The exploratory test shall be in the form of a low level (the level shall be chosen to give a usable signal to noise ratio on the vibration sensing equipment) continuous sinusoidal sweep at a rate no greater than 2 octaves per minute over the frequency range equal to or greater than that to which the equipment is to be qualified. If the configuration of the equipment is such that critical natural frequencies cannot be ascertained due to either the complexity of the equipment or the inaccessibility of critical parts, the exploratory test is not adequate. If the configuration of the equipment is such that critical natural frequencies cannot be ascertained, seismic qualification shall be accomplished by proof testing with a random input motion that shall generate a test response spectrum (TRS) to envelop the RRS. An acceptable alternative shall be to qualify the equipment by a fragility test as described in AA-4351.7.

It must be noted that for certain equipment, due to geometric or material nonlinearities, a low level resonant frequency search may not be a conclusive determinant of equipment resonances. In those cases, a higher level input shall be used and the exploratory tests rerun.

AA-4351.4 Seismic Qualification Tests. Seismic qualification tests designed to show acceptable performance of equipment during and following an SSE shall be preceded by one or more OBE tests. The number of OBE tests shall be given in the equipment design specification and shall be followed by one SSE test. Each minimum test duration shall be given in the equipment design specification.

AA-4351.5 Equipment Loads During Testing. Seismic qualification tests of equipment shall be performed with the equipment subjected to the combined loads identified in AA-4212. These loads shall be simulated and shown to be equal to or greater than those expected. If any load is not included during these tests, justification for the absence of the load shall be provided.

AA-4351.6 Proof Testing. Proof testing is used to qualify equipment for a particular application or to a particular requirement. A proof test requires that the equipment be subjected to one of the tests described in AA-4352 to the particular response spectrum or time history defined for the mounting location of the equipment. An attempt to determine the failure threshold of the equipment need not be made. The equipment shall be tested to the performance requirement of the equipment design specification and need not be tested to its ultimate capability.

AA-4351.7 Fragility Testing. Fragility testing shall be used to qualify the equipment by determining its ultimate capability for performing its safety function. Equipment fragility shall be demonstrated by using sine beat, continuous sine, transient, or multifrequency excitation to random-type waveforms. A measurement of the equipment's fragility level for a particular excitation demonstrates its ultimate capability to perform its safety function while subject to that motion.

AA-4351.8 Device Testing. Devices shall be tested under simulated operating conditions to either the levels dictated by expected service requirements or to their ultimate capability. The devices shall be mounted on the shake table in a manner that dynamically simulates the inservice mounting conditions. If a device is intended to be mounted on a panel, the panel shall be included in the test setup, or the response at the device mounting location shall be monitored in the assembly test (see AA-4351.9), in which case the device shall be mounted directly to the shake table if the inservice excitation can be simulated. Devices shall be tested using the methods described in AA-4352.

AA-4351.9 Assembly Testing. Large complex assemblies shall be tested under simulated operating conditions and monitored for proper functional performance; however, it may not always be practical to simulate all systems simultaneously. It is acceptable, therefore, to test such equipment in an inoperative mode with the actual or simulated devices installed, including any nonsafety-related devices. The test shall determine the vibration response at the device location by either direct measurement at full excitation or by determination of the transfer function from the assembly mounting points to the device mounting point. The resulting vibration response of the device at its location in the assembly shall be less than the vibration to which the device is qualified. The test methods described in AA-4352 shall be used.

AA-4352 Test Methods

Present test methods generally fall into two major categories: proof testing (see AA-4351.6) and fragility testing (see AA-4351.7). The choice of method will depend upon the nature of the equipment and the expected vibration environment. Consideration shall be given to the choice of single axis or multiple axis testing as described in AA-4358.

Copyright ASME International
Provided by IHS under license with ASME
No reproduction or networking permitted without license from IHS
Not for Resale

A proof test seismic simulation waveform shall

(a) produce a TRS that closely envelops the RRS or the applicable portions thereof, using single or multiple frequency input motion;

(b) have a peak amplitude equal to or greater than the zero period acceleration (ZPA) of the RRS;

(c) have a test duration in accordance with the requirements of AA-4357.

AA-4353 Artificially Broadened Required Response Spectra

If single frequency tests are to be conducted to artificially broadened response spectra, tests shall be conducted at frequency intervals on either side of the center frequency of the response spectra. If the center frequency in the broadened area is f_c, testing shall be conducted at this frequency and also at the frequencies $f_c \pm \Delta f_c, f_c \pm 2\Delta f_c, \ldots, f_c \pm n\Delta f_c$, where Δf_c corresponds to a $\frac{1}{6}$ to $\frac{1}{3}$ octave interval, until the entire broadened area has been covered. The TRS generated during each individual test shall have at least the same amplitude as the original narrow-band response spectrum.

AA-4354 Damping Selection

The damping value used in analyzing the test machine motions that generate the TRS shall be the same damping value as that of the RRS.

AA-4355 Single Frequency Tests

If it can be shown that the equipment has no resonances, only one resonance, or distinct resonances which are widely spaced such that the resonance interaction does not reduce the fragility level, single frequency testing may be used to qualify the equipment.

AA-4355.1 Derivation of Test Input Motion. For any input waveform, the shake table motion shall produce a TRS acceleration at the test frequency that is at least equal to that given by the RRS. Additionally, the input motion shall be adjusted to produce a TRS that envelops the RRS at all frequencies, as described in AA-4353. Also, the maximum acceleration of the shake table motion shall be at least equal to the ZPA value of the RRS.

AA-4355.2 Continuous Sine Test. A test at any frequency shall consist of the application of a continuous sinusoidal motion corresponding to the maximum acceleration to which the equipment is to be qualified for the appropriate duration (see AA-4357). The selection of the peak input acceleration and the length of time the test is to be run shall produce at least the maximum response acceleration given in AA-4355.1. The peak input acceleration must be at least equal to the ZPA of the RRS, except at low frequencies where the RRS is below the ZPA for which the value of the RRS must be met (see AA-4358 for requirements on the axial relationships for the test).

AA-4355.3 Sine Beat Test. A test at any frequency shall consist of the application of sine beats of peak acceleration corresponding to that for which the equipment is to be qualified. The sine beats consist of a sinusoid at the frequency and amplitude of interest, as shown in Fig. AA-4355.3. The number of cycles per beat and the peak amplitude of the beat are chosen in accordance with the criteria of AA-4355.1. The peak amplitude of the beat shall at least be equal to the ZPA of the RRS, except at low frequencies where the RRS is below the ZPA for which the value of the RRS must be met.

For a test at any frequency, a series of beats are used to represent low cycle fatigue effects, with a sufficient pause between the beats so that there is no significant superposition of equipment response motion (see AA-4358 for requirements on the axial relationships for the test).

AA-4355.4 Decaying Sine Test. A test at any frequency shall consist of the application of decaying sinusoids of peak acceleration corresponding to that for which the equipment is to be qualified. The decaying sinsuoids consist of a single frequency of exponentially decaying amplitude, as shown in Fig. AA-4355.4. The peak amplitude and decay rate are chosen to obtain a TRS from the shake table motion that envelops the RRS (see AA-4355.1). The peak amplitude of the sinusoid shall at least be equal to the ZPA of the RRS, except at low frequencies where the RRS is below the ZPA for which the value of the RRS must be met.

For a test at any frequency, a series of decaying sinusoids are used with a sufficient pause between the sinusoids so that there is no significant superposition of equipment response motion. The frequencies of interest are the natural frequencies of the equipment being tested (see AA-4358 for requirements on the axial relationships for the test).

AA-4356 Multiple Frequency Tests

When the seismic ground motion has not been strongly filtered, the floor motion retains the broadband characteristic. In that case, multifrequency testing shall be used for qualification. It is used as a general qualification method as long as the TRS envelops the

Copyright ASME International
Provided by IHS under license with ASME
No reproduction or networking permitted without license from IHS
Not for Resale

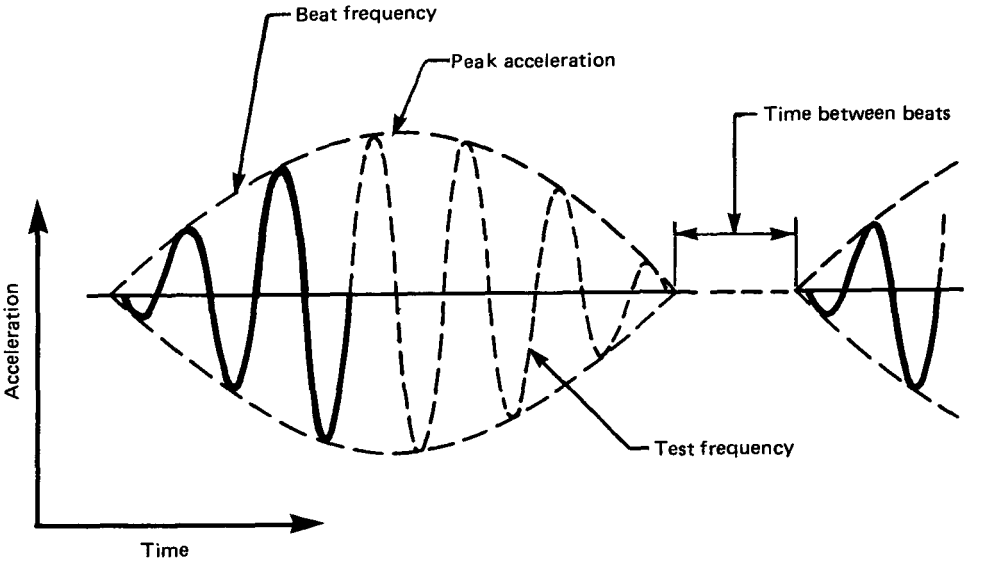

FIG. AA-4355.3 SINE BEAT FREQUENCY AND AMPLITUDE

(Reproduced from ANSI/IEEE 344-1975, Recommended Practice for Seismic Qualification of Class 1E Equipment for Nuclear Power Generating Stations, by permission of The Institute of Electrical and Electronics Engineers, Inc.)

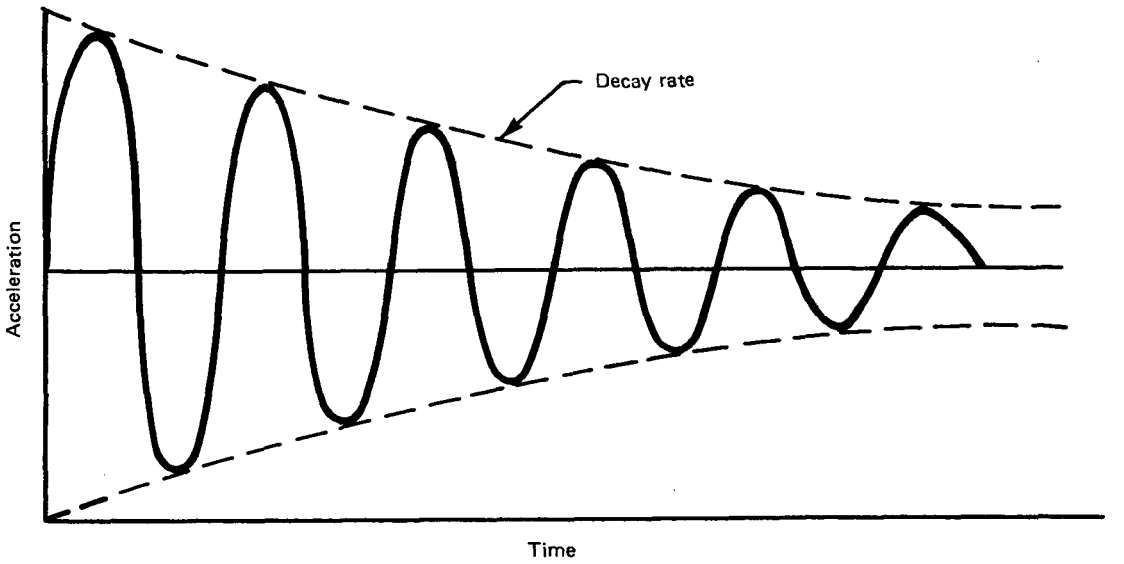

FIG. AA-4355.4 SINE AMPLITUDE DECAY RATE

(Reproduced from ANSI/IEEE 344-1975, Recommended Practice for Seismic Qualification of Class 1E Equipment for Nuclear Power Generating Stations, by permission of The Institute of Electrical and Electronics Engineers, Inc.)

Copyright ASME International
Provided by IHS under license with ASME
No reproduction or networking permitted without license from IHS
Not for Resale

RRS. Specific input excitation to the test machine shall include a time history motion consisting of random and complex wave shapes.

The test machine input excitation waveforms described in the following subparagraphs shall be employed to test to an RRS level. Other inputs that are not specifically referenced here may also be employed, provided that they envelop the RRS.

AA-4356.1 Derivation of Test Input Motion. For any waveform, the test machine motion must be adjusted so that the TRS envelops the RRS over the frequency range for which the particular test is designed; and, as a minimum, the test machine acceleration must equal the ZPA of the RRS. This comparison must be made using equivalent values of damping. The adjustment of the input motion to produce an envelope spectrum shall be made considering the following factors:

(a) the RRS may have motion amplification over a narrow or broadband of frequencies;

(b) the input excitation waveform may be one of several multiple frequency types;

(c) the equipment being tested may have one of many possible dynamic characteristics.

For assemblies or devices where the dynamic response results from numerous interacting modes, the shake table input excitation must be adjusted so that the TRS envelops the RRS over a frequency range that includes all natural frequencies of the equipment up to the ZPA.

AA-4356.2 Time History Test. A test may be performed by applying to the equipment a specified time history that has been synthesized to simulate the required input to the equipment. It shall be demonstrated that the actual test machine motion was equal to or greater than the required motion.

A time history record may be synthesized to match the RRS using simulation techniques. The duration of the input excitation must be sufficient to simulate the effects of a seismic event. Alternatively, the equipment design specification may contain time history data for use in testing.

AA-4356.3 Random Motion Test. A test shall be performed by applying to the equipment a random excitation, the amplitude of which is controlled in $\frac{1}{3}$ octave or narrower frequency bandwidth filters with individual output gain controls. The excitation shall be controlled to provide a TRS that equals or exceeds the RRS.

The peak value of the input excitation shall equal or exceed the ZPA of the RRS. The duration of the random excitation shall be as described in AA-4357.

AA-4356.4 Random Motion With Sine Beat Test. To meet an RRS that includes a moderately high peak random excitation, it is acceptable to adjust the random input, as described in AA-4356.3, to equal or exceed as much of the RRS as possible without using a peak input acceleration substantially greater than the ZPA. A sine beat or beats shall be superimposed with random input motion to provide a composite excitation, so that the TRS equals or exceeds the entire RRS over a frequency range that includes the natural frequencies of the equipment up to the ZPA frequency [see Fig. AA-4356.4-1]. The optimum number of oscillations per beat shall be determined from a plot showing the ratio between the $\frac{1}{2}$% and 5% spectrum damping values and the oscillations per beat, as shown in Fig. AA-4356.4-2.

When more than one frequency of sine beats is required to meet the bandwidth of a spectrum, the beats shall be initiated simultaneously. However, if the bandwidth of the peak value of the RRS has been widened to account for uncertainty due to building frequency analysis, the beats shall be applied in sequence or the techniques of AA-4353 shall be applied.

AA-4356.5 Complex Wave Test. This test may be performed by subjecting the equipment to a motion that has been generated by summing a group of sine beats or decaying sinusoids. The frequencies of the component signals shall be spaced at $\frac{1}{3}$ octave or narrower frequency intervals to cover the range required by the RRS. The decaying sinusoids shall have individual decay rate controls covering the range of $\frac{1}{2}$% to 10%. Each frequency must have individual amplitude and phase controls. All frequencies shall be initiated simultaneously with the phase controls set to shape the peak amplitude of the composite waveform. The decay rate shall be varied, and the amplitude of each frequency shall be varied to optimize the fit of the TRS to the RRS. The peak acceleration of the test table during composite waveform excitation shall be greater than or equal to the ZPA of the RRS. The test shall consist of several applications of the motion spaced apart in time so that no significant superposition of response motion occurs. The number of applications of the motion must be justified as being representative of the strong motion portion of the SSE. The number of applications shall be such that the total duration of the middle-frequency components equals the duration of the SSE (see AA-4357).

AA-4356.6 Other Tests. The following factors shall be considered to justify the test method employed to qualify equipment:

Copyright ASME International
Provided by IHS under license with ASME
No reproduction or networking permitted without license from IHS
Not for Resale

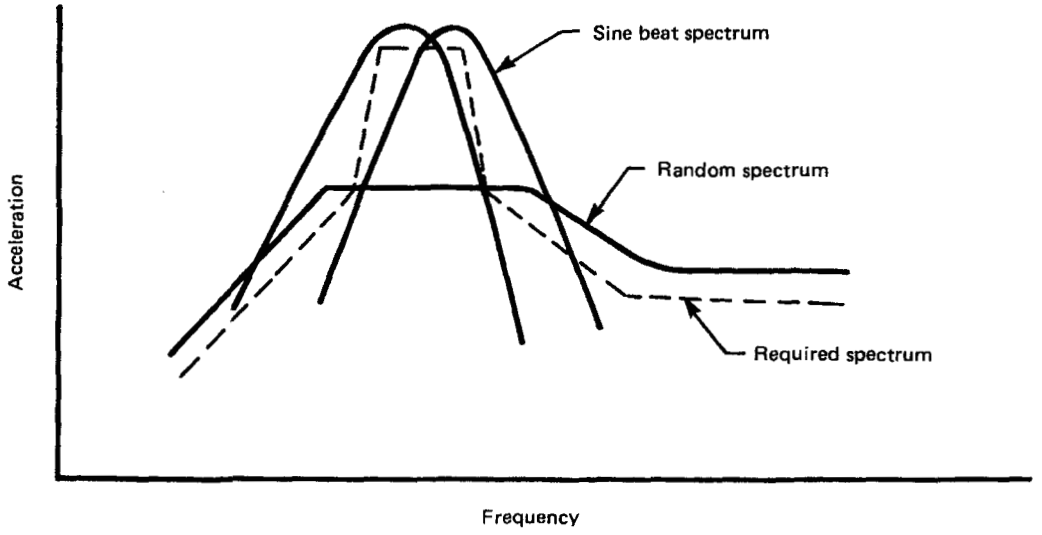

FIG. AA-4356.4-1 RESPONSE SPECTRUM OF COMPOSITE EXCITATION

(Reproduced from ANSI/IEEE 344-1975, Recommended Practice for Seismic Qualification of Class 1E Equipment for Nuclear Power Generating Stations, by permission of The Institute of Electrical and Electronics Engineers, Inc.)

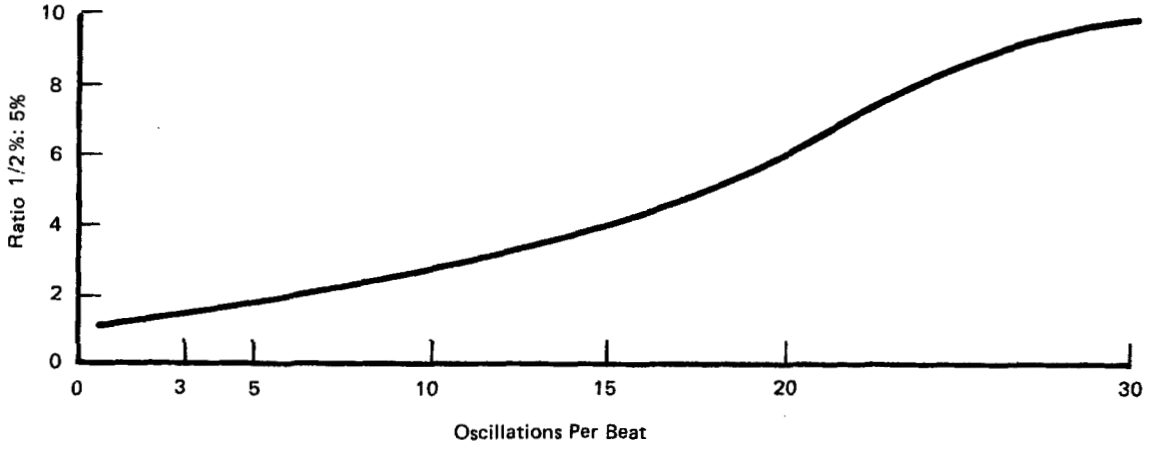

FIG. AA-4356.4-2 OSCILLATIONS PER BEAT

(Reproduced from ANSI/IEEE 344-1975, Recommended Practice for Seismic Qualification of Class 1E Equipment for Nuclear Power Generating Stations, by permission of The Institute of Electrical and Electronics Engineers, Inc.)

Copyright ASME International
Provided by IHS under license with ASME
No reproduction or networking permitted without license from IHS
Not for Resale

(a) bandwidth of the RRS compared to that of the TRS and equipment characteristics and responses;

(b) duration of the test compared to the defined seismic event;

(c) peak acceleration of the test input and the amplification observed;

(d) natural modes and frequencies of vibration of the equipment;

(e) typical damping of the equipment;

(f) fragility levels; and

(g) total number of cycles and the simulation of fatigue failure.

AA-4357 Test Duration

The number of required OBE events per 40-year-plant-life shall be a minimum of five unless stated otherwise in the equipment design specification.

The number of tests run as proof tests (see AA-4351.6) shall have an appropriate input level to fulfill the requirements of AA-4351.4. The OBE tests shall be followed by at least one SSE test. The duration of each test shall at least equal the strong motion portion of the original time history used to obtain the RRS for the SSE and shall be a minimum of 30 sec for a multifrequency test, and a minimum of 15 sec for a single frequency test. Credit may be taken for any test preceding the SSE test if it is shown to be greater than or equal in severity to the required OBEs. Fragility test durations shall at least equal the time duration for the strong motion portion of the SSE in order to properly account for vibration buildup.

AA-4358 Single- and Multiaxis Tests

Single-axis tests are permitted if the tests are designed to reflect conservatively the seismic event at the equipment mounting locations, or if the equipment being tested can be shown to respond independently in each of the three orthogonal axes or otherwise withstand the seismic event at its mounting location. This is the case if equipment axis coupling is zero or very low. For example, if a device is normally mounted on a panel that amplifies motion in one direction, or if a device is restrained to have motion in one direction, single-axis testing of the device is permitted.

If the preceding considerations do not apply, multiaxis testing shall be used. The minimum is biaxial testing with simultaneous inputs in a principal horizontal axis and the vertical axis. Independent random inputs are preferred and, if used, the test shall be performed in two steps with the equipment rotated 90 deg in the horizontal plane for the second step. If independent random inputs are not used (such as with single-frequency tests), four tests shall be run. First, with the inputs in phase; second, with one input 180 deg out of phase; third, with the equipment rotated 90 deg horizontally and the inputs in phase; and fourth, with the same equipment orientation as in the third step but with one input 180 deg out of phase.

AA-4360 DESIGN OF BOLTS

The number and cross-sectional area of bolts required for the load combinations of AA-4212 shall be determined in accordance with the ASME Code, Section III, Appendix XVII. Bolted joint design shall be in accordance with Appendix XVII, XVII-2460.

AA-4400 DOCUMENTATION REQUIREMENTS

The equipment design verification shall be documented by a certified design verification report (DVR), in accordance with the rules given in this section. This document may be based on one of three types of verification, or a combination of these:

(a) design verification stress report;

(b) design verification test report; or

(c) design verification by comparative evaluation.

Factors considered in choosing a particular type of design verification shall be included in the DVR.

AA-4410 CERTIFICATION OF DESIGN VERIFICATION

A certificate of design verification shall be provided with the DVR. This certificate shall include:

(a) description and identification of equipment covered by the DVR, including the name of the plant, the plant location, the Owner, location of the equipment in the plant, and its function;

(b) statement of compliance with Article AA-4000 and the equipment design specification requirements;

(c) date, revision, and report identification number of the analysis or test program; and

(d) names and signatures of responsible persons performing, reviewing, and approving the design verification.

Copyright ASME International
Provided by IHS under license with ASME
No reproduction or networking permitted without license from IHS
Not for Resale

AA-4420 EQUIPMENT DESCRIPTION

The DVR shall include a detailed description of the equipment being qualified. Outline drawings showing equipment interface points, anchor locations, weights, and locations of major components shall be included. In addition, plant specific information such as building location and elevation shall be reported if appropriate. Any appropriate tag numbers and equipment model numbers, where applicable, shall be included.

AA-4430 SAFETY-RELATED FEATURES

AA-4431 Safety-Related Functions

Equipment safety-related functions in all modes of operation shall be fully described in the DVR.

AA-4432 Critical Components

All components critical to the performance of the safety-related functions of the equipment shall be identified in the DVR.

AA-4433 Failure Modes and Evaluation Criteria

For all critical components listed, the potential failure modes being considered in the design shall be described in the DVR. In addition, the evaluation criteria used to verify that the critical components will not enter a failure mode shall be defined in the DVR.

AA-4440 REPORT CONTENT

AA-4441 Design Verification Report

The DVR shall address all items listed in this paragraph:

(a) description of analytical method used;

(b) description of mathematical model in sufficient detail to allow reconstruction of the model by referring only to the report content;

(c) list of the static loads considered;

(d) method of developing dynamic loadings, including:

(1) identification of response spectra and damping values used;

(2) method of combining modes;

(3) method of combining spatial components of dynamic loads; and

(4) assurance that rigid body motions are included;

(e) load combinations considered, including interface loading effects and differential movement of multiple equipment supports;

(f) evidence of verification of all computer programs used;

(g) justification of methods and assumptions used for manual calculations;

(h) results of analyses, including:

(1) failure mode analysis;

(2) description of significant mode shapes and natural frequencies;

(3) location and value of maximum stresses;

(4) location and value of maximum deformations;

(5) allowable interface loads;

(6) reaction data at equipment supports; these data may be reported in a summary form only if foundation loads are to be included. Otherwise, detailed listings of individual support reactions for each load case considered shall be included.

(7) summary of maximum anchor bolt or anchor weld stresses compared to allowable limits.

AA-4442 Design Verification Test

The DVR shall address all items listed in this paragraph:

(a) detailed test procedure used for the equipment design verification test (DVT);

(b) identification of the test facility performing the test and the test dates;

(c) list of test equipment used and certified calibration records for each;

(d) laboratory mounting details for the equipment tested and a comparison of this to inservice mounting; justification for all differences must be addressed;

(e) method used to simulate significant inservice interface loads, if applicable;

(f) variables to be measured during and after dynamic motion and the accuracy required for each measurement;

(g) number, type, and location of each sensor used to measure important equipment function and motion;

(h) description of vibration input to the test equipment including:

(1) single or multiaxis

(2) single or multifrequency

(3) if multifrequency, type used (sine beat, random);

(i) evidence that all significant modes were adequately excited;

(j) evidence that, for multifrequency tests, the test response spectra (TRS) enveloped the required response spectra (RRS);

Copyright ASME International
Provided by IHS under license with ASME
No reproduction or networking permitted without license from IHS
Not for Resale

(k) data showing that the safety-related functions as defined in AA-4431 were not compromised during or after the simulated dynamic loading;

(l) results of measurements performed to verify equipment functionability;

(m) maximum equipment response (displacement) during most violent tests;

(n) maximum reactions at equipment supports (measured or calculated);

(o) list of all anomalies during the DVT and the resolution of each;

(p) equipment modifications made during the DVT, if any, and justification for using test data without retesting, or full report of any retesting accomplished;

(q) summary of results of DVT and conclusions drawn.

AA-4443 Design Verification by Comparative Evaluation Report

If the equipment design being verified has been previously verified to different criteria, or if the equipment design is similar to a design previously verified, it may be acceptable to verify the current design by comparative evaluation.

Whether the basis for design verification is analysis or test, all of the points required by AA-4441 or AA-4442 must be addressed. In addition, any differences between the previous design verification method and the requirements of Article AA-4000 must be identified and justified as conservative. Any differences in equipment design between the previously verified design and the design being considered must also be shown to be conservative.

Copyright ASME International
Provided by IHS under license with ASME
No reproduction or networking permitted without license from IHS
Not for Resale

ARTICLE AA-5000
INSPECTION AND TESTING

AA-5100 GENERAL

AA-5110 SCOPE AND APPLICABILITY

This article contains general requirements for the examination, inspection, and testing of materials and equipment.

The requirements of this article are applicable to the extent they are specifically invoked by other Code sections. Unique requirements are given in each section.

AA-5120 RESPONSIBILITY FOR PROCEDURES

When an inspection or test is required by Article AA-5000 or by any other section, written inspection or testing procedures shall be developed by the parties performing the test or inspection subject to the specific requirements of this Code. The inspection or testing shall be performed by personnel qualified in accordance with Article AA-8000 and with applicable portions of the other sections.

AA-5130 MEASURING AND TEST EQUIPMENT

Control and calibration of measuring and test equipment (M&TE) shall be in accordance with ASME NQA–1, including Supplement 12S–1.

AA-5200 VISUAL INSPECTION

AA-5210 SCOPE

This article contains methods and requirements for visual inspection. The criteria for interpretation of visual inspection are not included in this article, since such criteria are included in the other Code sections.

AA-5220 DESCRIPTION OF METHOD

Visual inspection is generally used to determine such things as surface condition, alignment of mating surfaces, shape, or evidence of leaking.

AA-5221 Direct Visual Examination

Direct visual examination usually may be made when access is sufficient to place the eye within 24 in. (610 mm) of the surface to be inspected and at an angle not less than 30 deg to the surface to be examined. Mirrors may be used to improve the angle of vision, and aids such as a magnifying lens may be used to assist inspections. The specific part, component, vessel, or section thereof shall be illuminated to a minimum of 15 fc (160 lx) for general inspection and to a minimum of 50 fc (540 lx) for the detection or study of small anomalies. Visual inspection personnel shall successfully pass an annual visual examination to assure natural or corrected near distance acuity so that they are capable of reading standard J-1 letters on standard Jaeger-type test charts for near vision.

AA-5222 Remote Visual Inspection

In some cases, remote visual examination may have to be substituted for direct examination. Remote visual inspection may use visual aids such as mirrors, telescopes, borescopes, fiber optics, cameras, or other instruments. Such systems shall have a resolution capability at least equivalent to that obtainable by direct visual observation.

AA-5230 REQUIREMENTS

When required by the referencing Code section, visual inspections shall be performed.

Copyright ASME International
Provided by IHS under license with ASME
No reproduction or networking permitted without license from IHS
Not for Resale

AA-5240 INSPECTION CHECKLIST

When required by the referencing Code section, a checklist shall be used to plan visual inspections and to verify that the required observations were performed. This checklist shall establish minimum inspection requirements to be followed by the Manufacturer.

AA-5250 REPORTS

When required by another section of this Code, a written report shall be provided and shall contain the following as a minimum:

(a) the inspection procedure used, date of the inspection results, and inspector's signature;

(b) identification of instruments, equipment, tools, and documents to the extent that they or their equivalents can be identified for future examinations;

(c) observations and dimensional checks specified by the respective test data and reports developed during inspection and testing;

(e) conclusion and recommendation by visual inspection and testing personnel;

(f) reference to previous reports if this report is for reinspection and testing.

AA-5300 WELDED CONNECTIONS

Examination, inspection, and testing of welds shall be in accordance with Article AA-6000 and other sections of this Code.

AA-5400 BOLTED CONNECTIONS

AA-5410 BEFORE BOLTING

Flange seating surfaces shall be visually examined for cleanliness and acceptable surface finish. Flange faces shall be examined for compliance with tolerances for mutual parallelism and axial alignment, as well as for planarity of each flange.

Gaskets shall be visually examined to assure conformance with specified dimensional tolerances and freedom from tears, breaks, or other defects.

AA-5420 AFTER BOLTING

Bolts in all bolted connections shall be examined to ensure bolts are in place. A uniform sampling of 25% of all bolts in a bolted connection shall be tested with a calibrated torque wrench.

Torquing requirements shall be established for each bolted connection.

If any bolt in the sample fails to meet torque requirements, all bolts in the connection shall be retorqued.

Gaskets in bolted connections shall be visually examined for uniform compression.

AA-5500 FABRICATION TOLERANCES

Equipment and components shall be examined for conformance to tolerances required by this Code and by the design specification. Refer to other Code sections for specific requirements.

AA-5600 PRESSURE AND LEAK TESTING

Pressure and leak testing of equipment and components shall be performed in accordance with the requirements of this Code. Refer to the other Code sections for specific testing requirements.

AA-5700 PERFORMANCE AND FUNCTIONAL TESTING

Testing shall be performed to ensure that prototype and production equipment possess dynamic and functional characteristics that meet requirements of this Code and of the design specification.

Among the characteristics that may be determined by testing are fluid flow rates and pressures, air filter performance, electrical quantities, bearing operation, rotor balance, and sound power level.

NOTE: Divisions II and IV of this Code, in the course of preparation, will provide specific factory testing requirements and field testing requirements.

AA-5800 SEISMIC TESTING

Refer to AA-4350 for the requirements of structural design verification by testing.

Copyright ASME International
Provided by IHS under license with ASME
No reproduction or networking permitted without license from IHS
Not for Resale

ARTICLE AA-6000
FABRICATION, JOINING, WELDING, BRAZING, PROTECTIVE COATING, AND INSTALLATION

AA-6100 GENERAL

AA-6110 SCOPE AND APPLICABILITY

This article contains general requirements for the fabrication, joining, welding, brazing, protective coating, and installation of components, parts, and equipment.

The requirements of this article are applicable to the extent they are invoked by the other sections. Unique requirements are given in each Code section.

AA-6120 MATERIALS

AA-6121 Material Selection

Materials to be used in the fabrication of components, parts, and appurtenances shall conform to the requirements of Article 3000 of each Code section.

AA-6122 Material Identification

Materials to be used in the fabrication and installation of components, parts, and appurtenances shall be identified on fabrication and installation plans and specifications as required in Article AA-8000.

AA-6123 Repair of Material With Defects

Material with defects that are discovered or produced during the fabrication and installation processes may be used, provided the defects are repaired in accordance with the requirements of Article AA-8000, and for weld repairs, in accordance with AA-6300.

AA-6130 CONTROL OF FABRICATION AND INSTALLATION PROCESSES

Quality control procedures shall be prepared and maintained current for all fabrication and installation processes in accordance with the requirements of Article AA-8000.

AA-6200 FABRICATION PROCESSES

AA-6210 CUTTING, FORMING, AND BENDING

Material may be cut to shape and size by any means that does not degrade the mechanical or chemical properties of the material below the minimum specified values. The method or methods selected shall not create critical stress areas, such as less than accepted corner radii.

When thermal cutting is used, consideration shall be given to preheating the material.

Forming and bending of pressure-retaining parts that are to meet requirements of Section III or Section VIII of the ASME Code shall conform to the applicable article or articles of the applicable section of this Code.

AA-6220 FORMING TOLERANCES

Forming tolerances shall be defined in the design specification, drawings, and Manufacturer's design documents.

Formed parts outside the tolerances specified after the completion of all forming, assembly, and welding operations shall be rejected. Repairs may be made to formed parts to correct unacceptable tolerances in accordance with AA-6123.

AA-6230 FITTING AND ALIGNING

Parts that are to be assembled or joined by mechanical means (e.g., bolts) or welding shall be fitted, aligned, and when necessary, retained in position during assembly.

Copyright ASME International
Provided by IHS under license with ASME
No reproduction or networking permitted without license from IHS
Not for Resale

Attachments that are welded to the component during construction, but are not incorporated into the final component, such as alignment lugs or straps, tie straps, braces, preheat equipment, and postweld heat treatment equipment, are permitted provided the following requirements are met:

(a) attachment material shall be identified by ASTM or ASME specification number and shall be certified when required by another Code section;

(b) the temporary material is compatible for welding to the component material and the attachment and subsequent removal does not reduce the component's structural integrity below the minimum specified value;

(c) the welder and welding procedure shall be qualified in accordance with AA-6300;

(d) the immediate area around the temporary attachment shall be marked in an acceptable manner so that, after attachment removal, the area can be examined in accordance with the requirements of Article AA-5000;

(e) the temporary attachment shall be completely removed by mechanical means such as machining, shearing, clipping, or grinding, or by thermal cutting, in accordance with AA-6210.

AA-6240 WELDED JOINTS

Manufacturer's fabrication drawings shall provide complete information regarding location, type, size, and extent of all welds. Field and shop welds shall be clearly identified.

Members to be joined by welding shall be brought into correct alignment when necessary and held in position by bolts, clamps, or temporary weld attachments meeting the requirements of AA-6230, until the welding is completed.

Welding shall conform to the requirements of AA-6300.

AA-6250 MECHANICAL JOINTS

AA-6251 Fasteners and Threaded Joints

Fasteners and threaded joints shall be provided with locking devices or other means to prevent loosening under the vibratory loads expected during system operation. The threads of all bolts or studs shall be engaged for the full length of the thread in the nut unless specified otherwise on Manufacturer's design drawings or specifications. Thread engagement of all bolts and studs shall be as specified on the drawings.

AA-6252 Structural and Pressure Boundary Fasteners

Type, size, and spacing of structural and pressure boundary fasteners shall be selected to meet the maximum stresses anticipated for the worst load combination and shall be documented by calculations.

AA-6253 Thread Lubricants

Any lubricant or compound used in threaded joints shall be acceptable for the service conditions and shall not react unfavorably with any contact material. Contact surfaces within friction-type joints shall be free of oil, paint, lacquer, galvanizing, or other plating.

AA-6254 Removal of Thread Lubricants

All thread lubricants or compounds shall be removed from surfaces that are to be welded.

AA-6255 Bolted Connections

Surfaces of bolted parts in contact with the bolt head and nut shall not have a slope of more than 1:20 with respect to a plane normal to the bolt axis. Where the surface of a high-strength bolted part has a slope of more than 1:20, a beveled washer shall be used to compensate for the lack of parallelism. Bolts loaded in pure shear shall not have threads located in the load bearing part of the shank unless permitted by the design specification or Manufacturer's specification.

AA-6256 Precautions Before Bolting

All parts assembled for bolting shall have contact surfaces free from scale, chips, or other deleterious material. Surfaces and edges to be joined shall be smooth, uniform, and free from fins, tears, cracks, and other defects that would degrade the strength of the joint.

AA-6257 Bolt Tension

All high strength structural bolts shall be tightened to a bolt torque equal to that given in the design specification or Manufacturer's specification. Tightening shall be done by the turn-of-nut method or with properly calibrated wrenches. Bolts tightened by means of a calibrated wrench shall be installed with a hardened washer under the nut or bolt head, whichever is the element turned in tightening. Hardened washers are not required when bolts are tightened by the turn-of-nut method, except that hardened washers are required

Copyright ASME International
Provided by IHS under license with ASME
No reproduction or networking permitted without license from IHS
Not for Resale

under the nut and bolt head when the bolts are used to connect material having a specified yield point less than 40.0 ksi (276 MPa).

AA-6258 Locking Devices

Threaded fasteners, except high-strength bolts, shall be provided with locking devices to prevent loosening during service. Elastic stop nuts (when compatible with service temperature), lock nuts, jam nuts, and drilled and wired nuts are all acceptable locking devices. Upset threads may serve as locking devices.

AA-6300 WELDING REQUIREMENTS

AA-6310 GENERAL

(a) Scope. The requirements of AA-6300 apply to the preparation of welding procedure specifications, the qualification of welding procedures, welders, and welding operators for all types of manual and machine welding processes, and to the workmanship, weld quality, and inspection of weldments produced during the manufacture of equipment and components.

The requirements of this subarticle are applicable to the extent they are invoked by the other sections. Unique requirements are given in each section.

(b) Responsibility. Each Manufacturer is responsible for the welding done by its organization and shall conduct the tests required in this Code to qualify the welding procedures used in the construction of the weldments built under this Code, the performance of welders and welding operators who apply these procedures, and the inspections required for workmanship and weld quality verification.

(c) Records. Each Manufacturer shall maintain a record of the results obtained in welding procedure and welder and welding operator performance qualifications. These records shall be certified by the Manufacturer and shall be accessible for review.

(d) Base Metal

(1) Base metals to be joined by welding shall be one or a combination of those listed in Article 3000 of each Code section.

(2) Rust inhibitive coatings, galvanized coatings, or antispatter compounds may remain on the metal to be joined provided the welding procedure is qualified with these materials present.

(e) Filler Metals. Filler metals selected shall be one or a combination of those listed in the ASME Code, Section II, Part C, and shall be compatible with the welding process used and the base metal designated on the Manufacturer's drawings.

(f) Processes. Joining processes under this specification shall include oxyfuel gas welding (OFW), shielded metal-arc welding (SMAW), submerged-arc welding (SAW), gas metal-arc welding (GMAW), flux-cored arc welding (FCAW), gas tungsten-arc welding (GTAW), plasma-arc welding (PAW), resistance welding (RW), stud-arc welding (SW), and carbon-arc welding (CAW).

(g) Terms and Definitions. Terms and definitions shall be interpreted in accordance with ANSI/AWS A3.0.

(h) Symbols. Symbols used on the Manufacturer's drawings shall be in accordance with ANSI/AWS A2.4.

(i) Safety Precautions. Safety precautions shall conform to the latest edition of ANSI/ASC Z49.1.

(j) Standard Units of Measurement. The values stated in U.S. customary units are to be regarded as the standard. The metric (SI) equivalents of U.S. customary units as given are approximate.

(k) Welding Procedure and Performance Qualification:

(1) Qualification of the Manufacturer's welding procedure specifications and welder and welding operator performance shall be in accordance with the requirements of one or more of the following, as defined in each Code section.

(a) ASME Code, Section IX
(b) ANSI/AWS D1.1
(c) ANSI/AWS D9.1
(d) AWS C1.1
(e) AWS C1.3
(f) ANSI/AWS D1.3

(2) Welding of performance qualification test samples shall be performed in accordance with the Manufacturer's qualified welding procedure for the process used.

(3) Welding procedure qualification of coated base metals qualifies the procedure for uncoated base metals, but not vice versa.

(4) Base metal sensitization shall be considered in selecting the welding process and filler metals for welding procedures developed for welding stainless steel.

AA-6320 WORKMANSHIP

AA-6321 Preparation of Base Metal

AA-6321.1 Surfaces and edges to be welded shall be free from fins, tears, cracks, and discontinuities that would adversely affect the quality or strength of the weld. Surfaces to be welded and surfaces adjacent to a weld shall also be free from loose mill scale, slag, rust, moisture, grease, and foreign material that would

Copyright ASME International
Provided by IHS under license with ASME
No reproduction or networking permitted without license from IHS
Not for Resale

prevent proper welding. Mill scale that can withstand wire brushing, a thin rust-inhibitive coating, or anti-spatter compound may remain.

AA-6321.2 Galvanized surfaces need not have the zinc coating removed before welding, provided the welding procedure is qualified with the galvanizing present.

AA-6322 Joint Fit-Up

AA-6322.1 Joints to be welded shall be brought into correct alignment within the tolerances required by the qualified welding procedure.

AA-6322.2 When tack welds are used to assemble the joint for welding and are incorporated into the final weld, they shall be made with electrodes meeting the requirements of the final welds.

AA-6322.3 Tack welds not incorporated into the final welds shall be removed.

AA-6323 Weld Cleaning

AA-6323.1 Where cleaning of base metals is required, it shall be accomplished by wire brushing, grinding, blasting, solvents, or other suitable means that are noninjurious to the material or weld quality.

AA-6323.2 Before welding over previously deposited metal, slag, if present, shall be removed and the weld and adjacent base metal shall be brushed clean. This requirement shall apply not only to successive layers, but also to successive beads and to the crater area when welding is resumed after any interruption.

AA-6323.3 Upon completion, the weld and adjacent areas shall be cleaned of all slag, excessive spatter, soot, dirt, or any residue from welding. Welds shall be left in a condition ready for subsequent inspection.

AA-6324 Weld Quality

AA-6324.1 The sizes and lengths of welds shall be no less than those specified by design requirements and detail drawings.

AA-6324.2 Weld profiles shall be in accordance with the acceptable weld profiles shown in Fig. AA-6324.2.

AA-6324.3 The faces of fillet welds may be slightly convex, flat, or slightly concave, as shown in Fig. AA-6324.2, sketches (a) and (b), with none of the unacceptable profiles shown in sketch (c).

AA-6324.4 Groove welds shall preferably be made with slight or minimum reinforcement except as may be otherwise provided. In the case of butt and corner joints, the reinforcement shall not exceed $\frac{1}{8}$ in. (3.2 mm) in height and shall have a gradual transition to the plane of the base metal surface. See Fig. AA-6324.2, sketch (d). They shall be free of the discontinuities shown for butt joints in sketch (e).

AA-6330 INSPECTION AND TESTING OF WELDS

AA-6331 Butt and Fillet Welds

AA-6331.1 Production welds shall be inspected. As a minimum, visual inspection shall be made. Welds that conform to the following criteria shall be acceptable:

(a) fusion: complete fusion is required;

(b) penetration: required joint penetration as specified for the application;

(c) reinforcement of welds in butt joints: a maximum of 0.125 in. (3.2 mm) face reinforcement and 0.125 in. (3.2 mm) root reinforcement;

(d) throat and convexity of fillet welds: a minimum weld leg size, as required on the design drawings, with maximum convexity not to exceed 0.125 in. (3.2 mm);

(e) porosity or slag inclusion: a maximum of three visible pores or slag inclusions, or both, that do not exceed $0.25t$/in. ($0.25t$/25.4 mm) of weld, and a maximum of one visible pore or slag inclusion that does not exceed $0.5t$/in. ($0.25t$/25.4 mm) of weld, where t is the thinner base metal thickness;

(f) undercut: no undercut exceeding $0.15t$, where t is 0.125 in. (3.2 mm) or thinner, or exceeding $\frac{1}{32}$ in. (0.79 mm), where t exceeds 0.125 (3.2 mm);

(g) cracks: no cracks are permitted.

AA-6331.2 Completed welds shall be visually inspected for location, size, and length in accordance with the requirements of applicable Manufacturer's drawings and specifications.

AA-6331.3 When specified by the Engineer, the weld acceptance criteria of NCIG-01 may be used in lieu of the criteria of AA-6324 and AA-6331.1 for structures and supports fabricated to the requirements of the AISC specification and AWS D1.1.

Copyright ASME International
Provided by IHS under license with ASME
No reproduction or networking permitted without license from IHS
Not for Resale

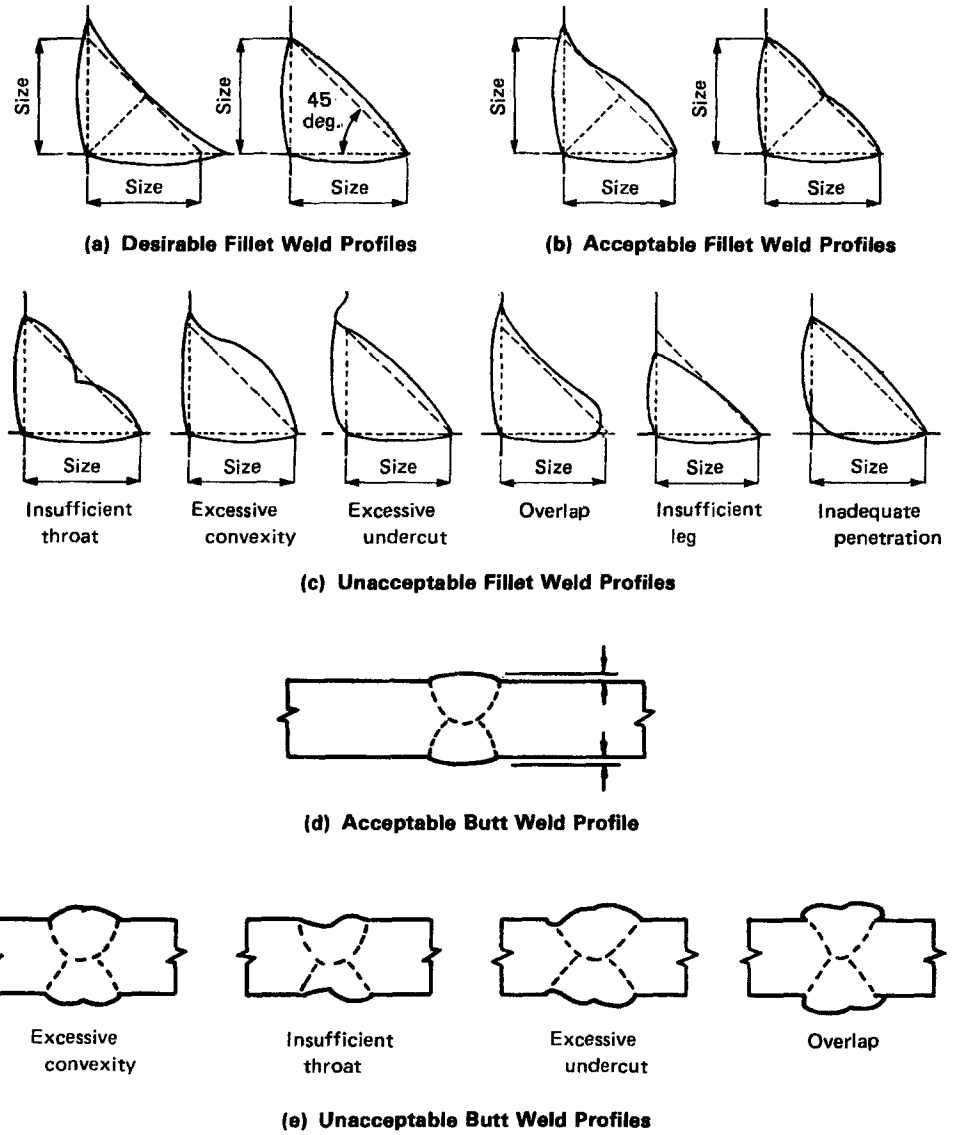

(a) Desirable Fillet Weld Profiles

(b) Acceptable Fillet Weld Profiles

(c) Unacceptable Fillet Weld Profiles

(d) Acceptable Butt Weld Profile

(e) Unacceptable Butt Weld Profiles

FIG. AA-6324.2 ACCEPTABLE AND UNACCEPTABLE WELD PROFILES
(Courtesy of the American Welding Society)

AA-6332 Resistance Spot Welds

The diameter of the spot and cross section of the nugget shall be in accordance with the sizes specified on detail drawings and in welding procedure specifications.

AA-6333 Stud Welding

AA-6333.1 The design of studs shall be suitable for arc welding to steel members with automatically timed stud welding equipment. An arc shield shall be furnished for all studs and pins over 10 gage diameter. At the time of welding, the studs shall be free from rust, rust pits, scale, oil, paint, galvanizing, plating, and other deleterious material that would adversely affect the welding operation. After welding, stud ferrules shall be broken free for visual inspection.

AA-6333.2 Stud weld reinforcement shall be as specified by the Manufacturer's drawings and procedure.

Copyright ASME International
Provided by IHS under license with ASME
No reproduction or networking permitted without license from IHS
Not for Resale

AA-6334 Nondestructive Testing (NDT) Methods and Acceptance Criteria

AA-6334.1 When nondestructive testing other than visual inspection is required, it shall be so stated in the Manufacturer's drawings and specifications.

AA-6334.2 Surface inspection, when required, shall be performed using the dye penetrant method. The standard methods set forth in ASTM E 165 shall be used for dye penetrant inspection, and the acceptance criteria shall be in accordance with AA-6331.

AA-6334.3 For detecting surface or subsurface discontinuities, radiographic or ultrasonic inspection may be used. Radiographic or ultrasonic inspection shall be used only when joint designs require multiple pass welds. The standard methods set forth in Section V of the ASME Code shall be used for inspection and acceptance criteria and shall be in accordance with the following:

(a) no cracks are permitted;

(b) not more than three individual discontinuities, with the greatest dimension being less than $\frac{1}{4}$ times the base metal thickness per linear inch (25.4 mm) of weld.

AA-6335 Inspector Qualifications

AA-6335.1 Personnel performing visual inspections shall meet the requirements of ASME NQA-1, including Supplements 2S-1 and 2S-2, to a Level I capability and be working under the supervision of a Level II or III individual, or shall be Level II or III individuals.

AA-6335.2 Personnel performing nondestructive testing shall be qualified in accordance with SNT-TC-1A. Only individuals qualified for NDT Level I and working under an NDT Level II or III individual, or individuals qualified for NDT Level II or III, may perform nondestructive testing.

AA-6335.3 Personnel performing visual inspections to the requirements of AA-6331.3 shall be trained in accordance with NCIG-03 with regard to the acceptance criteria of NCIG-01.

AA-6336 Repairs

Defects in welds or base metals may be repaired in accordance with the applicable welding code and the applicable equipment section of this Code. Weld repairs shall be performed by qualified welders using qualified procedures and inspected to the original acceptance criteria.

AA-6400 BRAZING

AA-6410 GENERAL

(a) Scope. The requirements of AA-6400 apply to the preparation of brazing procedure specifications, the qualifications of brazing procedures, brazers and brazing operators for all types of manual and machine brazing processes, and the workmanship, braze quality, and inspection of brazements produced during the manufacture of equipment and components. Brazing shall be in accordance with this subarticle unless specific requirements are given in the applicable equipment section of this Code.

(b) Responsibility. Each Manufacturer is responsible for the brazing done by its organization and shall conduct the tests required in this subarticle to qualify the brazing procedures used in the construction of the brazements built under this Code, the performance of brazers and brazing operators who apply these procedures, and the inspections required for workmanship and braze quality verification.

(c) Records. Each Manufacturer shall maintain a record of the results obtained in brazing procedure, and brazer and brazing operator performance qualifications. These records shall be certified by the Manufacturer and shall be accessible for review.

(d) Base Metals. Base metals to be joined by brazing shall be as listed in each section of this Code and applicable to that section.

(e) Filler Metals. Filler metals selected shall be one or a combination of those listed in the ASME Code, Section II, Part C, or ANSI/AWS A5.8 and shall be compatible with the brazing process used and the base metal designated on the Manufacturer's drawings.

(f) Processes. Joining processes under this specification shall include torch brazing (TB), furnace brazing (FB), induction brazing (IB), resistance brazing (RB), and dip brazing (DB).

(g) Terms and Definitions. Terms and definitions shall be interpreted in accordance with ANSI/AWS A3.0.

(h) Symbols. Symbols used on the Manufacturer's drawings shall be in accordance with ANSI/AWS A2.4.

(i) Safety Precautions. Safety precautions shall conform to the latest edition of ANSI/ASC Z49.1.

(j) Standard Units of Measurement. The values stated in the U.S. customary units are to be regarded as the standard. The metric (SI) equivalents of U.S. customary units as given are approximate.

Copyright ASME International
Provided by IHS under license with ASME
No reproduction or networking permitted without license from IHS
Not for Resale

(k) Brazing Procedure and Performance Qualification:

(1) Qualification of the Manufacturer's brazing procedure specifications, and brazer and brazing operator performance, shall be in accordance with the requirements of one or more of the following:

(a) ASME Code, Section IX;

(b) ANSI/AWS C3.3.

(2) Brazing of performance qualification test samples shall be performed in accordance with the Manufacturer's qualified brazing procedure for the process used.

AA-6420 WORKMANSHIP

AA-6421 Preparation of Base Metal

Surfaces and edges to be brazed shall be free from fins, tears, cracks, and discontinuities that would adversely affect the quality of strength of the brazement. Surfaces to be brazed and surfaces adjacent to a brazement shall also be free from loose mill scale, slag, rust, moisture, grease, and foreign material that would prevent proper brazing.

AA-6422 Joint Fit-Up

Joints to be brazed shall be brought into correct alignment within the tolerances required by the qualified brazing procedure.

AA-6423 Cleaning

AA-6423.1 Where cleaning of base metals is required, it shall be accomplished by wire brushing, grinding, blasting, solvents, pickling, or other suitable means.

AA-6423.2 Upon completion, the brazement and adjacent areas shall be cleaned of flux residues and oxide scale formed during the brazing process.

AA-6430 INSPECTION AND TESTING

AA-6431 Visual Examination

AA-6431.1 Visual examination of brazed joints is used for estimating the soundness by external appearance, such as continuity of the brazing filler metal, size, contour, and wetting of fillet along the joint, and, where appropriate, to determine if filler metal flowed through the joint from the side of application to the opposite side.

AA-6431.2 Brazed joints shall be inspected by visual means prior to mechanical or section tests. As a minimum, visual inspection shall be made. The results of the visual examination shall meet the following requirements:

(a) braze metal shall be present at all edges of the joint;

(b) no unfused brazing filler metal shall be present;

(c) undercutting shall have a maximum depth of 5% of the base metal thickness, or 0.010 in. (0.254 mm), whichever is less;

(d) individual pores shall have a maximum diameter of 0.015 in. (0.381 mm), and the minimum space between such pores shall be 0.5 in. (12.7 mm);

(e) the sum of all pore diameters shall be a maximum of 0.030 in. (0.762 mm) in each linear inch of joint;

(f) no cracks are permitted.

AA-6431.3 Mechanical or section tests, when required, shall be accomplished in accordance with the applicable code specified in AA-6410.

AA-6432 NDT Methods and Acceptance Criteria

AA-6432.1 When nondestructive testing other than visual inspection is required, it shall be so stated in the Manufacturer's drawings and specifications.

AA-6432.2 Surface inspection, when required, shall be performed using the dye penetrant method. The standard methods set forth in ASTM E 165 shall be used for dye penetrant inspection, and the acceptance criteria shall be in accordance with AA-6431.

AA-6432.3 For detecting surface or subsurface discontinuities, other nondestructive methods may be used. The standard methods set forth in Section V of the ASME Code shall be used for NDT inspection. The extent of examination and acceptance criteria shall be stipulated in the procurement documents.

AA-6433 Inspector Qualifications

AA-6433.1 Personnel performing visual inspections shall meet the requirements of ASME NQA-1, including Supplements 2S-1 and 2S-2, to a Level I capability and shall be working under the supervision of a Level II or III individual, or shall be Level II or III individuals.

AA-6433.2 Personnel performing NDT shall be qualified in accordance with SNT-TC-1A. Only individuals qualified for NDT Level I and working under an NDT

Copyright ASME International
Provided by IHS under license with ASME
No reproduction or networking permitted without license from IHS
Not for Resale

Level II or III individual, or individuals qualified for NDT Level II or III, may perform NDT.

AA-6434 Repairs

AA-6434.1 Defects in base metals or brazed joints may be repaired in accordance with written repair procedures mutually agreed upon between the Manufacturer and purchaser. Repairs shall be performed by qualified brazers in accordance with the qualified brazing procedure specification. Repairs shall be inspected to the original acceptance criteria.

AA-6500 CLEANING AND COATING

AA-6510 GENERAL

The design specification shall specify the required coating service levels for both internal and external surfaces of the equipment. Coating level designation shall be determined based on equipment location, function, and effect of coating system on intended component or system performance.

The main criteria for coating systems is to provide corrosion protection, facilitate decontaminability of the exposed surfaces to radioactive nuclide contamination, and provide assurance that if exposed to a loss of coolant accident condition, the coating system will not compromise the engineered safety systems.

AA-6511 Service Level I Areas

These areas require coating systems that are essential to the attainment of the accident-mitigating performance of structures, systems, and components that are essential to the prevention of, or mitigation of the consequences of, postulated accidents that could cause undue risk to the health and safety of the public. A Service Level I protective coating system shall conform to the Service Level I coating requirements specified in ANSI N512[1] and ANSI N101.2.[2] In addition, quality assurance requirements and documentation specified in ANSI N101.4[3] shall also be provided. Galvanized steel and stainless steel surfaces do not require an additional protective coating system, and therefore are not subject to the requirements of this paragraph.

AA-6512 Service Level II Areas

These areas require coating systems that are essential to the attainment of the intended normal operating performance of structures, systems, or components. Service Level II protective coating systems may conform to the Service Level I coating requirements specified by the ANSI N512 quality assurance requirements, except that documentation required may be defined in the design specification or Manufacturer's specification. (Documentation specified in ANSI N101.4 is not required for Level II coating systems.) The coating systems shall be designed for the applicable postaccident service conditions for the specific surfaces, but not for the incontainment postaccident service conditions.

AA-6513 Service Level III Areas

These areas require coating systems that are not essential to either the normal or accident operating performance of a structure, system, or component. Coating systems designated as Coating Level III shall conform to the equipment Manufacturer's specifications. Documentation shall be defined in the Manufacturer's specification or design specification. (ANSI N101.4 documentation is not required.)

AA-6514 Stainless Steel Surfaces

Stainless steel surfaces shall not be coated.

AA-6520 SURFACE PREPARATION

Surface preparation for carbon steel shall meet the requirements specified in Section 8 of ANSI N512. Carbon steel surface preparation for Service Level I coatings systems must be blast-cleaned to the requirements of SSPC-SP10.

AA-6530 COATING

The following topics should be addressed in the design specification regarding coating work.

AA-6531 Scope of Work

Outline the areas to be coated or otherwise protected.

[1] The following Standard should be substituted for chemical resistance tests in ANSI N512: ASTM D 3912.

[2] The following Standard should be substituted in applicable paragraphs of ANSI N101.2 regarding the DBA requirements: ASTM D 3911.

[3] The following Standard should be substituted in applicable paragraphs of ANSI N101.4 or used to provide more current quality assurance requirements: ASTM D 3843.

Copyright ASME International
Provided by IHS under license with ASME
No reproduction or networking permitted without license from IHS
Not for Resale

AA-6532 Coating System Selection and Evaluation

Provide specific guidelines and requirements for coating system tests and required criteria for tested material evaluation.

AA-6533 Quality Assurance Manual

The quality assurance manual must address the 10 CFR 50, Appendix B, requirements and pertinent requirements of ANSI N101.4.

AA-6534 Coating Inspector's Qualifications

The inspector's qualifications must meet the requirements of ASME NQA-1, including Supplements 2S-1 and 2S-2.

AA-6535 Coating Applicator's Qualifications

These requirements must be established in application procedures for each specific substrate and material to be used prior to allowing the applicator to apply any material to surfaces installed in Service Level I areas.

AA-6536 Safety and Environmental Control

Ventilation, temperature, and humidity must meet the coating Manufacturer's requirements. Proper illumination, safe equipment, scaffolding, and procedures regarding work practices must be followed.

AA-6537 Quality Control Procedures

These procedures must be developed by the coating applicator and approved by the Owner or authorized representative.

AA-6538 Coating Material Certification

The coating Manufacturer must provide product identity certification stating that the material meets the requirements of ANSI N101.2, ANSI N101.4, and ANSI N512, or any other specific requirements.

AA-6539 Surface Preparation

Surface preparation must be defined as to the degree of cleanliness and required anchor profile in the steel surface. The blast abrasives to be used and cleaning residual contaminants from blast abrasives must be addressed. The time elapsed between surface preparation and the first coat of coating material application should be indicated to prevent any rust bloom from appearing on the blasted surface.

AA-6539.1 Coating Application and Cure Requirements. Unacceptable coating application with respect to overspray, dryspray, sags, runs, mudcracking, blisters, pinholes, insufficient film buildup or excessive film buildup, and other defects must be addressed. Curing requirements at various temperature ranges should be addressed for each coat of specific material used.

AA-6539.2 For carbon steel, the design specification or Manufacturer's specifications shall state the requirements for prime coat and finish coat thicknesses.

Galvanized steel surfaces from which the coating has been removed during fabrication shall be coated with an appropriate qualified material per ANSI N101.2 to a thickness equivalent to the original coating.

AA-6540 REPAIR OF COATING SYSTEM

(a) Service Level I and Service Level II coating systems that require repair due to damage or defects in the original coating system shall be repaired in accordance with Chapter 11 or Chapter 12 (if coating has been in place for several months or years) of *Manual of Coating Work.*

(b) Galvanized surfaces that have been damaged shall be repaired with an appropriate qualified material per ANSI N101.2. Thickness of coating shall be equivalent to the original coating.

AA-6550 INSPECTION

Inspection for shop and field work on Level I and II coating systems shall conform to Section 10 of ANSI N512.

The design specification or Manufacturer's specification shall include the acceptance criteria for the degree of continuity of coating.

AA-6560 QUALITY ASSURANCE REQUIREMENTS AND DOCUMENTATION

(a) Coating Level I systems shall conform to the quality assurance requirements of ANSI N101.4. Level II and III coating system documentation shall conform to Manufacturer's or design specification requirements.

(b) Coating Level I documentation in accordance with the requirements of ANSI N101.2, ANSI

Copyright ASME International
Provided by IHS under license with ASME
No reproduction or networking permitted without license from IHS
Not for Resale

N101.4, and ANSI N512 shall be maintained on file. Documentation shall be provided to the Owner in accordance with the requirements of Article AA-8000.

AA-6600 INSTALLATION REQUIREMENTS

AA-6610 HANDLING AND RIGGING

(a) Handling and rigging requirements for assembled components or subassemblies shall be identified in Manufacturer's installation procedures in accordance with Article AA-7000. Manufacturer's procedures shall include the classification of the item to be handled as defined in ANSI/ASME NQA-2.

(b) Items that will be handled or supported during installation by a crane or other lifting device shall be equipped with lifting eyes or other means to maintain the item in proper orientation without exceeding structural design integrity of the assembly while being handled or supported. The design specification shall identify any special rigging requirements or restrictions for final erection.

AA-6620 FIELD ASSEMBLY

(a) Where equipment requires component assembly during final installation, the equipment manufacturer shall provide detailed written procedures for making the proper final assembly. Installation procedures shall include requirements for all other interfacing services, such as electrical, piping, supports, and ductwork. Installation procedures shall also address assembling, setting, erecting, leveling, aligning, securing, doweling, connecting, cleaning, lubricating, final adjusting, inspecting, and all other operations necessary to make the equipment operable.

(b) The equipment Manufacturer shall be responsible for advising the Owner or designee of field connections or services required for the proper and safe operation of the equipment as specified in the design specification. These requirements shall be explained in the installation procedures. The equipment Manufacturer shall make provisions in the design of his equipment for the required field connections.

(c) Alignment markings, where required for the proper field positioning and connection of parts or subassemblies, shall be shown on the Manufacturer's installation drawings.

AA-6630 TEMPORARY FIELD ATTACHMENTS

(a) Field attachments to equipment and ducts not specified in the design drawings, the design specification, or this Code are permitted only when authorized in writing by the equipment Manufacturer, Owner, or his designee. The method of attachment shall meet the requirements of the drawings, specifications, or this Code, as applicable, and neither the attachment nor the method of attachment shall adversely affect present or future performance, reliability, or structural integrity of the item or the installed system. Temporary attachments shall be removed before delivery or final acceptance of the installed system, whichever is applicable.

(b) Unauthorized attachments shall not be made to equipment or ducts and, when discovered, shall be removed in a manner that will not affect the immediate or future performance, reliability, or structural integrity of the item or the system. The equipment Manufacturer, or the Owner or his designee, as applicable, shall be advised of the unauthorized attachment and shall review the impact of such attachment. The method of removal or repair, or both, if necessary, shall be authorized by the equipment Manufacturer or the Owner or the Owner's designee. If the attachment does adversely affect immediate or future performance or reliability, and removal of the attachment or repair does not eliminate the adverse result, the item affected shall be replaced.

Copyright ASME International
Provided by IHS under license with ASME
No reproduction or networking permitted without license from IHS
Not for Resale

ARTICLE AA-7000
PACKAGING, SHIPPING, RECEIVING, STORAGE, AND HANDLING

AA-7100 GENERAL

AA-7110 SCOPE AND APPLICABILITY

This article contains general requirements for packaging, shipping, receiving, storage, and handling of components, parts, and equipment.

The requirements of this article are applicable to the extent they are invoked by the other Code sections. Unique requirements are given in each respective Code section.

AA-7120 RESPONSIBILITY

The requirements for the activities covered by this Code are identified in this article and in each Code section. The establishment of practices and procedures, and the providing of resources for personnel, equipment, and services necessary to implement the requirements of this Code, may be delegated to other organizations, and such delegation shall be documented. However, it is the responsibility of each organization performing work covered by this Code to comply with procedures and instructions issued for the project and to conform to the requirements of this Code as it is applicable to its work.

AA-7200 GENERAL REQUIREMENTS

This article contains requirements that are to be fulfilled by organizations responsible for performing any segment of work described in each Code section.

This article establishes measures acceptable for the packaging, shipping, receiving, storage, and handling of air and gas treatment items to be incorporated in the nuclear power plant and for the inspections, examinations, testing, and documentation to verify conformance to specified requirements.

This article is intended to supplement ANSI/ASME NQA-2, Part 2.2. The provisions of this article shall replace these respective sections and subsections of ANSI/ASME NQA-2, Part 2.2. The balance of ANSI/ASME NQA-2, Part 2.2, shall apply and be part of this Code.

Terms used in Article AA-7000 that relate to quality assurance are defined in ASME NQA-1, Supplement S-1, Terms and Definitions. Additional terms are defined in ANSI/ASME NQA-2, Part 2.2.

AA-7210 PLANNING, PROCEDURES, AND INSTRUCTIONS

The design specification and drawings for air and gas treatment items shall include provisions for accomplishing the packaging, shipping, receiving, storage, and handling activities described in this Code. The preparation and control of procedures and work instructions for these activities shall be provided. Sufficient details shall be included to assure compliance with the provisions of Article AA-7000 and each Code section.

AA-7220 PERSONNEL QUALIFICATIONS

Those personnel who perform inspection, examination, and testing activities at the job site to assure compliance to this Code shall be qualified in accordance with ASME NQA-1, Supplements 2S-1 and 2S-2. Offsite inspection, examination, or testing shall be audited and monitored by personnel who are qualified in accordance with ASME NQA-1, Supplements 2S-1 and 2S-2.

AA-7230 CLASSIFICATION OF ITEMS

The requirements for activities covered by this article (packaging, shipping, receiving, storage, and handling)

Copyright ASME International
Provided by IHS under license with ASME
No reproduction or networking permitted without license from IHS
Not for Resale

are divided into four levels with respect to protective measures to prevent damage, deterioration, or contamination of the items, based upon the important physical characteristics and not upon the important functional characteristics of the item with respect to safety, reliability, and operation. It should be recognized, however, that within the scope of each level there may be a range of controls and that the detailed requirements for an item are dependent on the importance of the item to safety or reliability. Items, once classified, shall be restricted to that level or higher for each of the packaging, shipping, receiving, storage, and handling operations. Any package unit or assembly made up of items of different levels shall be classified to the highest level designated for any of the respective parts, unless the higher level subassembly or part can be packaged to its respective level while still attached to the total assembly or is totally protected within the assembly. The balance of the unit or assembly may be classified to a lower level. If the unit is disassembled, a level shall be indicated for each part.

Items covered by this Code are given the appropriate protection classification level in accordance with the provisions of ANSI/ASME NQA-2, Part 2.2, Section 2, and these levels and detailed requirements are delineated in each equipment section of this Code.

AA-7300 PACKAGING

AA-7310 GENERAL

This subarticle contains the requirements for packaging items for protection against corrosion, contamination, physical damage, or any effect that would lower the quality or cause the item to deteriorate during the time it is shipped, handled, and stored.

Implementation of AA-7300 is accomplished by applying the appropriate criteria contained in ANSI/ASME NQA-2, Part 2.2, concerning cleaning, preservatives, desiccants, inert gas blankets, cushioning, caps and plugs, barrier and wrapping materials, tapes, blocking and bracing, containers, marking, other quality assurance provisions, and documentation.

AA-7320 LEVEL OF PACKAGING

The packaging criteria are divided into four levels corresponding to the levels designated by AA-7230.

AA-7400 SHIPPING

AA-7410 GENERAL

This subarticle covers the requirements for loading and shipment of items as defined in AA-7230. Described herein are environmental protection during transit, procedures to minimize damage in transit, precaution required when handling items during loading and transit, and identification and inspection on overseas shipments.

The mode of transportation used shall be consistent with the protection classification of the item and with the packaging methods employed.

Copyright ASME International
Provided by IHS under license with ASME
No reproduction or networking permitted without license from IHS
Not for Resale

ARTICLE AA-8000
QUALITY ASSURANCE

AA-8100 GENERAL

AA-8110 SCOPE AND APPLICABILITY

This article contains general requirements for the quality assurance of components, parts, and equipment.

The requirements of ASME NQA-1 apply to the component, parts, and equipment covered by this Code.

The requirements of Article AA-8000 are applicable to the extent they are specifically invoked by each Code section. Additional or supplemental requirements may also be given in each Code section.

AA-8120 RESPONSIBILITY

The organization invoking this Code for the design, construction, and acceptance testing of equipment, parts, and components used in nuclear safety-related air and gas treatment systems in nuclear facilities shall be responsible for specifying any additional requirements and appropriately relating them to specific items or services.

AA-8130 RESPONSIBILITIES OF FABRICATORS, MATERIAL SUPPLIERS, AND MATERIAL MANUFACTURERS

(a) Some or all of the responsibilities of lower tier organizations may be assumed by any higher tier organization (e.g., the Owner may assume some of the responsibilities, such as certifying test results, of the Material Manufacturer). The organization assuming lower tier responsibility shall meet the requirements noted herein for that organization.

(b) In addition to the specific responsibilities delegated to the Fabricator, Material Supplier, and Material Manufacturer by the Owner or designee, the following shall apply:

(1) each member of the chain depicted in Fig. AA-8130 shall be responsible for evaluating and qualifying the suppliers of contracted services or material from the next level down, i.e., the Fabricator shall be responsible for evaluating and qualifying the Material Supplier's quality assurance program, and so forth;

(2) each member of the chain depicted in Fig. AA-8130 shall be responsible for notifying the party that qualified their program of planned modifications that might affect the quality of the delivered product;

(3) the Fabricator, Material Supplier, and Material Manufacturer shall be responsible for establishing and maintaining an identification and verification program for the traceability of material while under his control;

(4) the Fabricator, Material Supplier, and Material Manufacturer shall be responsible for controlling quality during manufacture and fabrication, including control of manufacturing processes, testing, examination, repair, and treatment of the material, including subcontracted services.

AA-8200 IDENTIFICATION AND CONTROL OF ITEMS

AA-8210 DOCUMENTATION

Documents for procurement of material and subcontracted services shall include requirements necessary to assure their compliance with ASME NQA-1 and the additional requirements of this paragraph. Measures shall be established to assure that all purchased and fabricated material and services conform to the requirements of this paragraph.

Measures shall be established for identification and control of material, including partially processed material, throughout the manufacturing and fabrication process and during shipment. These measures shall assure that identification is maintained either on the material or on records traceable to the material through manufacture and fabrication. Welding filler metal for use in repair of the material shall also be controlled in accordance with this paragraph.

Copyright ASME International
Provided by IHS under license with ASME
No reproduction or networking permitted without license from IHS
Not for Resale

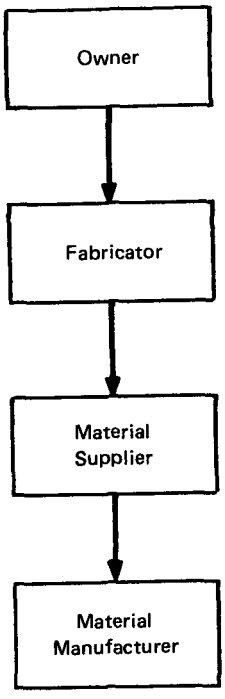

FIG. AA-8130 HIERARCHY OF RESPONSIBILITY

AA-8220 IDENTIFICATION AND COMPLETED MATERIAL

(a) Identification of material from the Material Manufacturer shall consist of marking the material with its applicable specification and grade, heat number or heat code, and any additional marking required by this section to facilitate traceability of the results of all tests and examinations performed on it; except that, for those materials for which the Material Manufacturer's Certificates of Compliance are allowed, heat number or heat code identification need not be indicated either on the material or the certificates. Alternatively, a marking symbol or code that identifies the material with the material certification may be used, and such symbol or code shall be explained in the Certified Material Test Report or Certificate of Compliance, as applicable.

(b) Physical identification on individual material used in the assembly of a component by heat number or code, or specification and grade, need not be done provided the completed assembly is marked with a unique identification number that is traceable to documentation that identifies the material used in the assembly by the requirements of AA-8220(a).

AA-8230 MARKING REQUIREMENTS FOR SMALL PRODUCTS

(a) Except as required by the material specification, small parts need not be individually marked provided they are packed in packages or containers that are clearly identified by legible marking to ensure positive identification of the material up to the point of use.

(b) Welding and brazing materials shall be clearly identified by marking on the package or container to ensure positive identification of the material. The package or container marking shall include the heat or lot number, as applicable, a control marking code that identifies the materials with the Certified Material Test Report, and other information such as specification, grade, classification number, supplier's name, and trade designation.

AA-8240 CERTIFIED MATERIAL TEST REPORTS

The Certified Material Test Report, when required, shall include the actual results of all required chemical analyses, mechanical tests, and examinations.

AA-8250 RECORDS OF EXAMINATIONS AND TESTS

All characteristics required to be reported by the material specifications and by this section shall be traceable to the results recorded. Records shall identify the procedure and revision to which an examination or test was performed and include the recorded results of examinations and tests. Measures shall be established so that the status and results of any required examination and test can be determined for the material.

AA-8300 QUALITY ASSURANCE RECORDS

Documentation required by this section and each of the other sections shall be prepared, maintained, and submitted to the Owner for recording as required by the applicable section and ASME NQA-1.

Copyright ASME International
Provided by IHS under license with ASME
No reproduction or networking permitted without license from IHS
Not for Resale

ARTICLE AA-9000
NAMEPLATES AND STAMPING

AA-9100 GENERAL

AA-9110 SCOPE AND APPLICABILITY

This article contains general requirements of nameplates for components and equipment.

The requirements of this article are applicable to the extent they are specifically invoked by the other Code sections. Unique requirements are given in each Code section.

Stamping is required only for those components constructed in accordance with the ASME Code. No other third party inspection or certification is required by this Code.

AA-9120 REQUIREMENTS

Each item shall have a nameplate, except as otherwise permitted by this Code. Nameplate information shall be as required by (a) through (e) below:

(a) Manufacturer's name;

(b) Manufacturer's serial number and, if applicable, model number;

(c) capacity in appropriate units;

(d) operating temperature and pressure;

(e) other data prescribed by the specific equipment section of this Code.

The data shall be in characters not less than $^{3}/_{32}$ in. (2.4 mm) high. All nameplate marking shall be stamped, etched, cast, or impressed on the nameplate. Nameplates shall be of a noncorrosive material. Stamping directly on items, where permitted by the respective equipment section of this Code and used in lieu of a nameplate, shall be done with blunt-nosed continuous or blunt-nosed interrupted dot die stamps. The selected marking method shall not result in any harmful contamination or sharp discontinuities.

AA-9130 ATTACHMENT OF NAMEPLATES

If the nameplate is marked before it is affixed to the item, the Manufacturer shall ensure that the nameplate with a correct marking has been applied to the appropriate item.

The nameplate shall be attached by a method that will not affect the structural or operational integrity of the item and that shall assure permanent attachment during the life expectancy of the component.

AA-9140 LOCATION OF NAMEPLATES

The location of the nameplate shall be shown on the as-constructed drawing. It should be readily visible when the component is installed. Nameplates shall be located so insulation does not obscure nameplate data.

Copyright ASME International
Provided by IHS under license with ASME
No reproduction or networking permitted without license from IHS
Not for Resale

NONMANDATORY APPENDIX AA-A
DESIGN AND QUALIFICATION BY ANALYSIS

ARTICLE AA-A-1000
INTRODUCTION

In many cases, the primary acceptance criterion for design verification is maintenance of structural integrity. If such is the case, analysis is a very practical means of demonstrating acceptability of equipment. Analysis has the advantage of being relatively simple, and it has good reproducibility and auditability. Furthermore, if a piece of equipment similar to one previously analyzed is to be investigated, a significant reduction in effort may be achieved simply by revision of the existing analysis.

Structural analysis is accomplished by manual engineering calculations, finite element calculations, or a combination of the two. The objective of this Appendix is to provide some insight for the designer in application of conventional finite element techniques to sometimes unconventional equipment designs found in HVAC systems. Manual calculations are adequately covered in engineering texts and the literature. Several categories of HVAC equipment are discussed, and specific examples are given for an air handling unit and a duct support.

TABLE AA-A-1000
ANALYSIS CONSIDERATIONS

Analysis Consideration	Manual	FEM
Problem size	Small	Large
Problem complexity	Simple	Complex
Nature of loading	Static, simple, dynamic	Static, dynamic
Number of combined loads	Few	Many
Existence of irregularities (holes, discontinuities)	Few, simple	Many, complex
Design iterations	Few	Many

In choosing an analysis method, manual or finite element, many factors must be considered. Some of these factors and the methods of choice are listed in Table AA-A-1000.

Copyright ASME International
Provided by IHS under license with ASME
No reproduction or networking permitted without license from IHS
Not for Resale

ARTICLE AA-A-2000
FINITE ELEMENT METHOD

The precise solution of complex discrete-parameter structural analysis problems is commonly referred to as the finite element method (FEM). The energy concept is commonly used in formulating the problem's solution. The load vectors, stiffness, mass, and, sometimes, damping matrices are constructed from geometry and loading information developed by the designer. For all but the simplest problems, this matrix work is done entirely by a finite element computer program. The FEM program then performs all of the matrix manipulations necessary to arrive at a solution. For example, given the structural geometry, boundary conditions, and externally applied forces and/or displacements, the program will compute the displacements, support reactions, and internal forces for the equipment components.

Use of the FEM is no more powerful nor accurate than the designer's skill and knowledge of its use. Many modeling decisions and assumptions must be made with the awareness of the resulting impact on the solution accuracy. Considerations particular to HVAC equipment are discussed in detail in Article AA-A-4000.

The designer follows these steps in performing a finite element analysis:

(a) the decision is made that the FEM is a valid method for the problem;

(b) the equipment design is reduced to a mathematical model by:

(1) locating major structural elements such as frame members and sheet metal (frame members are represented by beam elements and sheet metal by plate or shell elements);

(2) locating nodes (intersection points of structural elements, anchorage points, external loading points, device mounting points);

(3) defining connectivity (identifying nodes at ends and corners of structural elements);

(4) defining material properties;

(5) locating and defining supported masses; and

(6) defining internal and external loadings;

(c) the above information is coded and entered on a computer for subsequent analysis; and

(d) the resulting output is examined, combined, and evaluated to determine if stresses, displacements, etc., are within allowable limits.

Guidelines specifically related to HVAC equipment undergoing a FEM analysis are given in the following articles.

Copyright ASME International
Provided by IHS under license with ASME
No reproduction or networking permitted without license from IHS
Not for Resale

ARTICLE AA-A-3000
EQUIPMENT CONSTRUCTION

Equipment for air and gas treatment systems is generally fabricated with metal which lends itself to linear–elastic or inelastic analysis techniques. Framing systems for such equipment are generally constructed of AISC standard cold-rolled shapes or formed shapes made by bending sheet metal steel. The standard shapes used are primarily angles, structural tubing, and channels, although W sections are often used as floor members. Bent-up shapes are used in a wide variety of forms such as angles, channels, hat sections, U, C, and Z sections. Structural members, as in the case of sheet metal, may be made of carbon steel or stainless steel. These structural members and sheet metal may be connected using welded, bolted, riveted, Pittsburgh lock, or mechanical-type connections.

For welded-type connections, the gas-arc weld process using standard E 50, E 60, or E 70 electrodes is commonly used. Common types of welds are fillet welds, butt welds, groove welds, and plug welds. Sheet metal may be welded to structural framing members using intermittent welds.

Bolts used in the construction of housings and structural components of equipment are usually of low strength coated carbon steel and are generally small in diameter [less than $\frac{3}{4}$ in. (18 mm)]. Anchor bolts used to hold down a framing system may be either of low strength or high strength steel.

Equipment may be wall or floor mounted, or suspended from the ceiling. External supports are usually used for wall and ceiling supported equipment and sometimes for floor mounted equipment where the equipment must be elevated. Most external supports are trapeze-type moment frames or simple trusses or, in the case of wall mounted units, cantilever supports may be used. Cantilever supports are usually braced against side sway. Supports may be attached to clips, base plates, or cast-in-place embedments. Floor mounted equipment, especially large air handling units, often has no external supports. Integral supports such as base-frame footings, runners, or clips are bolted directly to the floor.

Equipment may be attached to existing structures either with built-in anchors or installed anchors. Built-in anchors commonly used are cast-in-place embedments or anchor bolts. Installed anchors are drilled-in expansion or drilled and grouted anchor bolts, or bolts placed into existing inserts.

Nonstructural components must be supported. These include, but are not limited to, filters, cooling coils, heating coils, fans (or fan internal components, such as bearings, shafts, fan wheels, and inlet and outlet cones), motors, screens, registers, grilles, dampers, transitions, ductwork connections, control and monitoring instruments, tubing and piping, compressors, chillers, and access doors and panels. Since most of these components must be removable for servicing, they are generally installed using detachable connections such as bolts, screws, clamps, racks, or rollers.

Copyright ASME International
Provided by IHS under license with ASME
No reproduction or networking permitted without license from IHS
Not for Resale

ARTICLE AA-A-4000
MODELING TECHNIQUES

Finite element modeling of HVAC equipment involves many considerations which are beyond the scope of this appendix. The analyst must have a working knowledge of the behavior of the structure and its components under various types of loadings and the governing acceptance criteria for the particular load combination.

(a) This article addresses the formulation of equipment models for five categories of HVAC equipment:

(1) air-handling units (AHU),

(2) fans,

(3) instruments and controls (I & C) cabinets,

(4) duct supports,

(5) equipment supports (e.g., refrigeration equipment, filters, cooling coils, heating elements, etc.).

(b) The equipment may be separated into various modeling systems such as:

(1) the framing system or skeleton, which may consist of structural members modeled using beam-type finite elements;

(2) sheet metal housing covering the structural framing, which may be modeled using plate-type finite elements; in some cases, the structural framing may be formed by making standing seams from the sheet metal housing without the use of additional structural load-bearing members; these members may be modeled using beam-type finite elements;

(3) the connections between the structural frame and sheet metal housing, which may be modeled using shear-type finite elements or appropriate boundary conditions;

(4) nonstructural components within the housing and their local support systems; these components may be modeled using an equivalent mass and stiffness with appropriate boundary conditions, and the local supports may be modeled using beam-type finite elements;

(5) equipment supports consisting of structural members attached to the floor using anchors or welds; the supports may be modeled using beam-type finite elements, and the anchors and welds are modeled by selecting appropriate boundary conditions.

AA-A-4100 AIR HANDLING UNIT (AHU) MODEL

Formulating a model for an AHU requires a fabrication and assembly drawing showing the external framing and internal components. The external framing could be modeled using beam-type elements with the skin represented by plate-type elements. In developing a plate mesh, care should be exercised in keeping the aspect ratio of each element to a minimum (preferably below 2). Provision should be made for representing internal components such as heating elements, cooling coils, filters, and dampers by an appropriate mass and stiffness representation at nodal points where these components are attached. Supports for such components are modeled using beam-type elements with the proper boundary conditions representing a fixity, release, or a combination for developing end forces and moments. The attachment of the equipment skid to the floor should also be represented to obtain the proper reaction loads and overturning moments. An example of a mathematical model for an AHU is shown ahead in Figs. AA-A-7100-1 and AA-A-7100-2. This model can be used to perform a deadweight analysis, an internal pressure analysis (with the internal pressure applied on the plate elements of the AHU), external duct and piping loads applied at the connections to the AHU, and dynamic loads as applicable.

AA-A-4200 FAN MODEL

A model for fans is developed using the assembly drawings and fan component specifications. Components of structural importance to the model include the support framework, the bearing supports, fan shaft, and the fan housing sheet metal. Nonstructural components such as the fan wheels and the bearings are represented in the models by masses lumped at appropriate nodes. The fan model is composed of nodes connected by beam and plate finite elements. The base, vertical supports,

Copyright ASME International
Provided by IHS under license with ASME
No reproduction or networking permitted without license from IHS
Not for Resale

and the bearing supports are modeled with prismatic beam elements. The fan shaft is modeled as a simply supported beam with a node in the center at which the mass of the fan wheel is lumped. The fan housing is bolted or welded to the supporting framework. Nodes are included in the model at the approximate locations where the beams of the framework are connected to the plates used to model the fan housing. Nodes representing anchor bolts are restrained against translation. A typical mathematical model used to analyze the fans is shown in Fig. AA-A-4200. This model can be used to determine the dynamic behavior and perform a detailed stress analysis of the fan.

AA-A-4300 INSTRUMENTS AND CONTROLS (I & C) CABINETS

Formulating a model for an I & C cabinet requires an assembly and fabrication drawing showing the cabinet framework, component supporting structures, I & C components, and their attachment to the supporting structures. The cabinet framework can be modeled using beam elements and the panels using plate elements. The I & C support structures may be modeled using beam or plate elements at their proper locations. The component mass must be incorporated in the finite-element representation. A model of an I & C cabinet is shown in Fig. AA-A-4300. This model can be used to perform a deadweight and dynamic analysis.

AA-A-4400 DUCT SUPPORTS

Duct supports can be modeled using beam elements; however, duct mass and flexibility should be properly simulated. The natural frequency of the ductwork can be dominated by either hanger displacement or duct deflection. The interaction of the ductwork with the supports should be represented through appropriate spring and mass boundary conditions. A sample model for duct supports is shown in Fig. AA-A-4400. This model may be used to perform a deadweight, concentrated load, and dynamic analysis.

AA-A-4500 EQUIPMENT SUPPORTS

Equipment supports can be modeled using beam elements. The mass and stiffness of the equipment should be included with the beam elements which represent the framework. The attachment of the frame to the floor should be represented through accurate boundary conditions. A sample of such a model, a refrigeration system support, is shown in Fig. AA-A-4500. This model can be used for evaluating the equipment support for deadweight, operating loads, and dynamic loads.

Copyright ASME International
Provided by IHS under license with ASME
No reproduction or networking permitted without license from IHS
Not for Resale

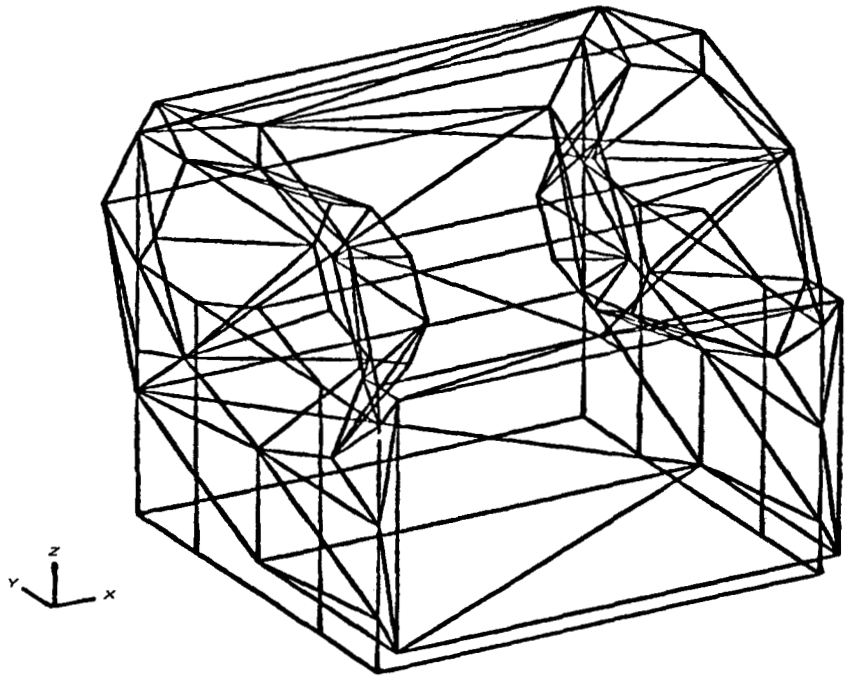

FIG. AA-A-4200 ISOMETRIC VIEW OF A TYPICAL FAN MODEL

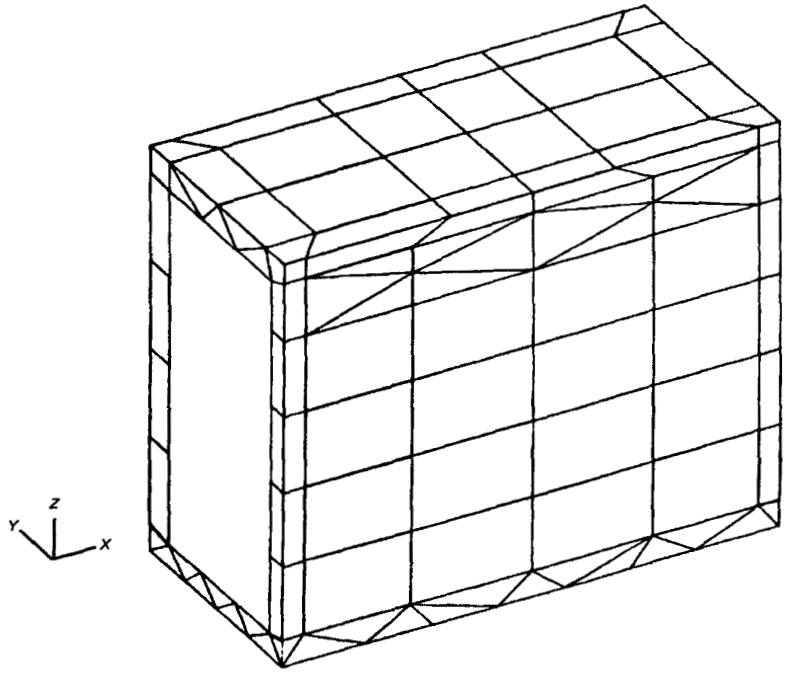

FIG. AA-A-4300 ISOMETRIC VIEW OF A TYPICAL I & C CABINET MODEL

--`,,```,,,,````-`-`,,`,,`,`,,`---

Copyright ASME International
Provided by IHS under license with ASME
No reproduction or networking permitted without license from IHS

Not for Resale

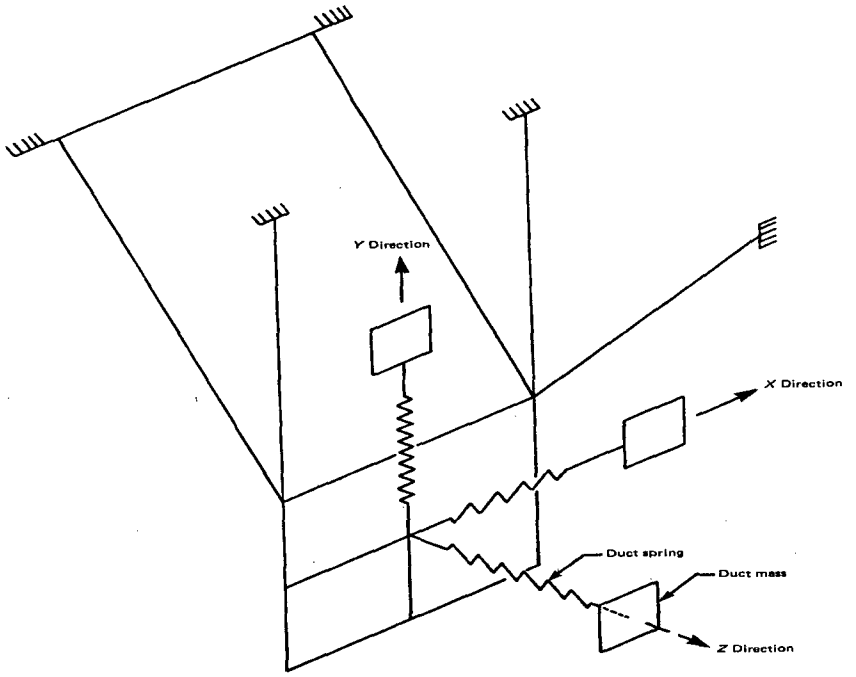

FIG. AA-A-4400 ISOMETRIC VIEW OF A TYPICAL DUCT SUPPORT MODEL

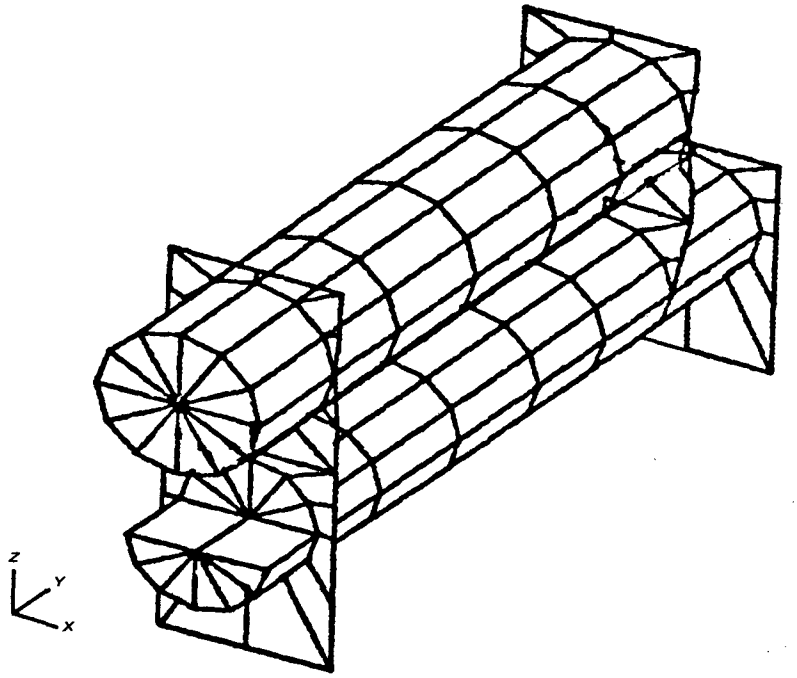

FIG. AA-A-4500 ISOMETRIC VIEW OF A TYPICAL REFRIGERATION EQUIPMENT SUPPORT

Copyright ASME International
Provided by IHS under license with ASME
No reproduction or networking permitted without license from IHS
Not for Resale

ARTICLE AA-A-5000
ANALYSIS

The structural and stress analyses necessary for designing the equipment and supports listed in Article AA-A-4000 should be performed using the methods outlined in this article. Other methods meeting the intent of this article may also be used. These analyses would use the models similar to those shown in Article AA-A-4000.

AA-A-5100 STATIC ANALYSIS

AA-A-5110 STATIC LOADS

Equipment and supports can be analyzed for static loads, which may include the following loads defined in A-4211:

(a) deadweight

(b) design pressure differential load

(c) live loads

(d) constraint of free end displacement loads (static or static equivalent)

(e) external loads (static)

(f) inertia loads (static equivalent)

(g) design wind load

AA-A-5200 DYNAMIC ANALYSIS

AA-A-5210 DYNAMIC LOADS

Dynamic analyses should be performed to determine the stresses and/or deflections of equipment and supports for the applicable dynamic loads, which may include the following loads defined in AA-4211:

(a) seismic loads

(b) additional dynamic loads

AA-A-5220 DYNAMIC ANALYSIS TECHNIQUES

Dynamic analysis can be performed using either response spectrum or time history techniques. Equivalent static analysis can also be performed, if justified. Dynamic analysis methodology outlined in Appendix N of the ASME Code, Section III, can be used to verify the adequacy of the equipment and supports.

AA-A-5230 INPUT MOTION

(a) The input motion representing the dynamic load will be applied at the location or locations at which the equipment and supports are supported from the primary structure (often a building floor, beam, or wall). If the equipment and supports are attached to an intervening component, the flexibility of the component providing the load path to the primary structure will be considered in defining the input motion.

(b) If the equipment and supports are connected to more than one supporting structure having different motions, the dynamic analysis should be performed using response spectra that envelop the individual response spectra for each support as input motion. If significant, the relative difference in displacements between support locations may also have to be considered.

AA-A-5240 TWO-STEP ANALYSIS

Stresses and loads in the equipment and supports due to dynamic loads may be determined by a two-step analysis. In the first step, the equivalent dynamic loads and accelerations, or both, applicable to the various elements of the equipment and supports, are determined from the dynamic analysis of a simplified model. In the second step, these loads are applied statically to a detailed model to determine the design stresses and loads, or both.

Copyright ASME International
Provided by IHS under license with ASME
No reproduction or networking permitted without license from IHS
Not for Resale

ARTICLE AA-A-6000
EVALUATION OF RESULTS

The results of the analyses should be presented in a format with convention, nomenclature, bases, modeling, and input data clearly stated. The analyses must be verified and the reproducible input preserved in accordance with appropriate quality assurance requirements. Documentation must meet the requirements of AA-4400.

AA-A-6100 STRESSES

Stresses should be combined in accordance with the requirements of AA-4212 to allow evaluation of all service level stresses against the respective service level limits of Table AA-4321 and the requirements of AA-4321 for plate- and shell-type components. Similarily, all service level stresses for linear-type systems must be evaluated against the respective service level limits of Table AA-4323 and the requirements of AA-4323. Acceptance criteria for these evaluations are given in AA-4214.

AA-A-6200 DEFLECTIONS

AA-A-6210 LINEAR

Because of critical operating or functional requirements, the equipment specifications may place limits upon the deflections at identified points of the equipment undergoing analysis. The equipment must be modeled to provide this information at these specific points. The final analysis must demonstrate that the deflection will not exceed the stated limit for the respective service levels identified.

AA-A-6220 NONLINEAR

Normally, Service Levels C and D will not require evaluation of linear (elastic) deflections. However, deflection limits which are controlled by buckling stress criteria are imposed. These limits must be satisfied as required by AA-4323.

AA-A-6300 SUPPORT LOADS

Equipment models must allow estimation of loads at all interfacing support points. (Characteristics of the supports must be included in the model.) The resultant support loads must be coordinated through the equipment support interface points to those responsible for design of the supporting structure.

AA-A-6400 CONNECTION LOADING

Assumptions regarding connections (internal structural connections and attachment of devices) must be evaluated upon completion of the analyses. The analyses results must be used to assure that internal structural connections and connections which attach individual devices to the equipment are adequate.

AA-A-6500 DEVICE LOADING

The method of analysis described in this appendix is not intended for, nor is it generally adequate for, operational qualification for active equipment. However, proper attention to modeling and to the type of output required will allow the analysis to provide information as to the static or dynamic field to which the device must be qualified. After identification of this environment, the device can be qualified by the method given in AA-4351.8.

Copyright ASME International
Provided by IHS under license with ASME
No reproduction or networking permitted without license from IHS
Not for Resale

ARTICLE AA-A-7000
SAMPLE PROBLEMS

This article presents sample analyses of an air handling unit (AHU) and a duct support.

AA-A-7100 SAMPLE AHU ANALYSIS

Computer generated plots of the mathematical model of a sample AHU are shown in Figs. AA-A-7100-1 and AA-A-7100-2. Figure AA-A-7100-1 shows the structural framework, internal bracing, and duct attachment frames. Figure AA-A-7100-2 shows the triangular plate finite element mesh used to model the external sheet metal skin of the AHU. There are a number of components on the inside of the unit, such as a filter, heating element, cooling coil, and dampers. Some of the components have attachment frames which add stiffness to the structure and are therefore included in the model. The masses of the components are included in the model by lumping mass at appropriate nodes. The AHU is attached to the floor via an integral base composed of channel skids. The channels are included in the model as beam elements. The left end of the AHU is attached to a wall. There is no sheet metal covering on that end of the unit. Several gaps will be noticed in the mesh in other places on the unit. It is at these locations that ducts attach to the AHU; therefore no elements are necessary. One feature of the model that should be noted is that, in each plane of the triangular plate mesh, the elements are oriented as randomly as possible to prevent development of an unrealistic stiffness bias in one direction.

The model geometry, boundary conditions, and loads are coded and entered into a finite element computer program. The program calculates deflections, natural frequencies, and mode shapes. The program then does a response analysis by combining modal responses with a method defined by the analyst. The static and dynamic results are then combined to calculate individual element stresses, frame deflections, and support reactions. Also, accelerations may be calculated at the model nodes.

AA-A-7200 DUCT SUPPORT (HANGER) SAMPLE PROBLEM

A duct support would appear to be a simple piece of hardware to evaluate. In fact, many variables must be considered because they may have significant effects on the outcome of the analysis. Among these variables are:

(a) duct support frame
(b) frame connection details
(c) bracing
(d) baseplates
(e) duct size and span lengths
(f) duct construction
(g) supported accessories and insulation
(h) adjacent supports and duct branches

The following paragraphs give a step-by-step description of one possible method for analysis.

AA-A-7210 HANGER MODEL

The hanger is modeled from an as-installed drawing which documents geometry, member sizes, joint fittings, baseplates, welds, and anchor bolts. A typical as-built drawing is shown in Figs. AA-A-7210-1 and AA-A-7210-2.

AA-A-7211 Baseplates

Baseplates are modeled as either completely restrained or as ground springs if the baseplate flexibility is sufficient to significantly affect hanger frequency. The model should provide all possible components of baseplate loading. See Fig. AA-A-7211.

AA-A-7212 Connections

If special joint fittings are used, joint flexibility members are included in the hanger model.

Copyright ASME International
Provided by IHS under license with ASME
No reproduction or networking permitted without license from IHS
Not for Resale

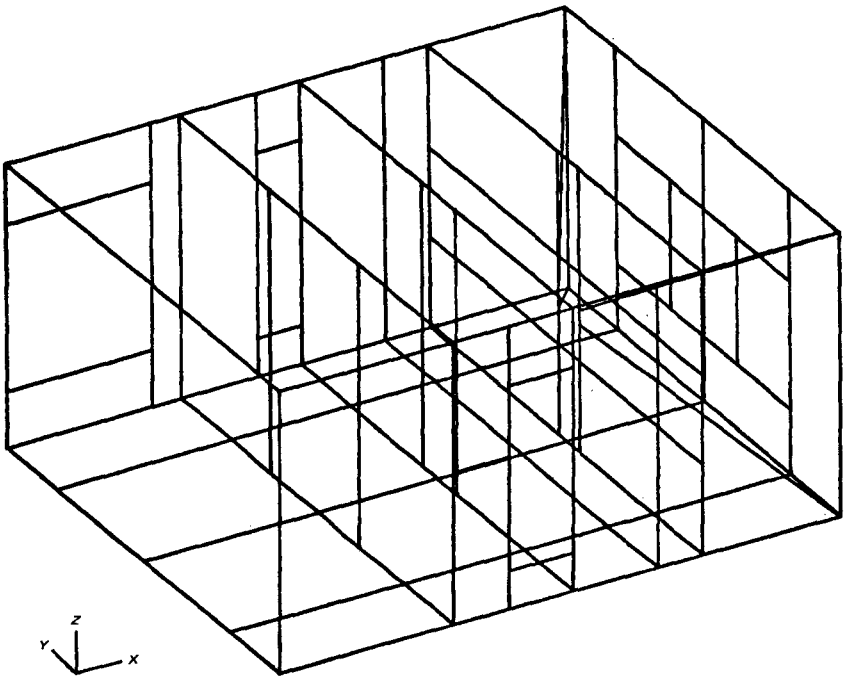

FIG. AA-A-7100-1 COMPUTER PLOT OF FINITE ELEMENT MODEL OF SAMPLE AHU (PERSPECTIVE VIEW OF TRI-PLATE MESH)

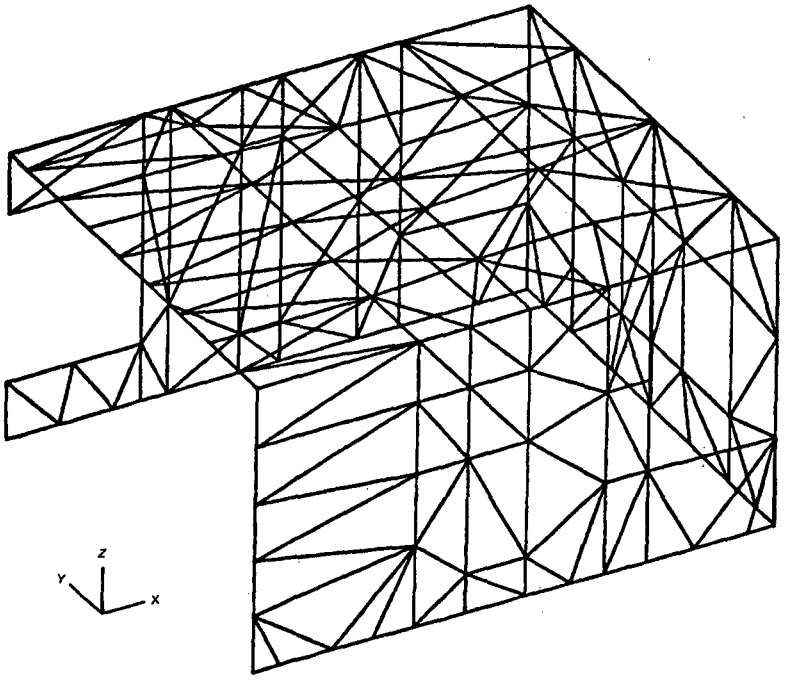

FIG. AA-A-7100-2 COMPUTER PLOT OF FINITE ELEMENT MODEL OF SAMPLE AHU (PERSPECTIVE VIEW OF TRI-PLATE MESH)

Copyright ASME International
Provided by IHS under license with ASME
No reproduction or networking permitted without license from IHS
Not for Resale

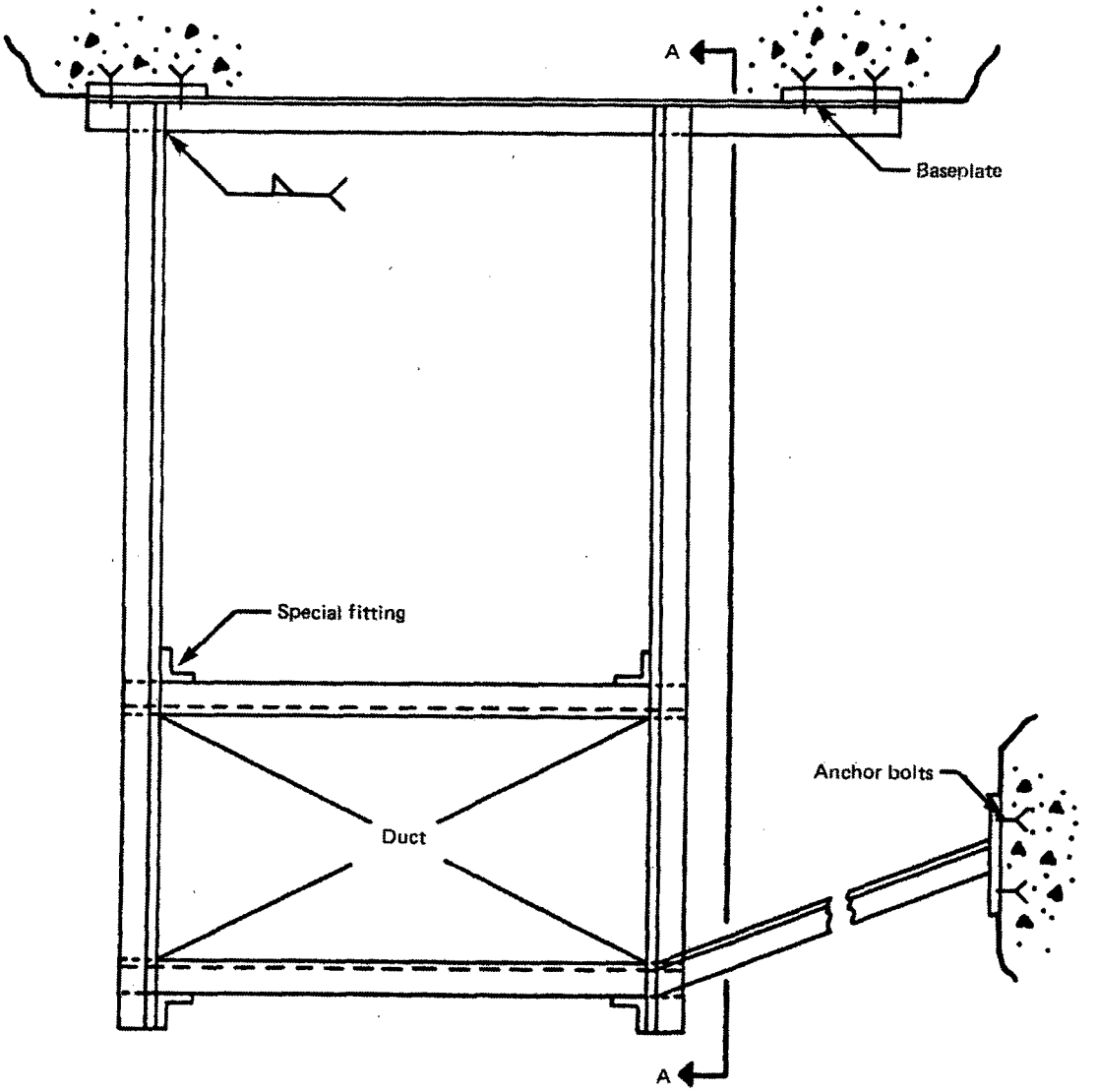

FIG. AA-A-7210-1 TYPICAL DUCT SUPPORT AS-BUILT
(DIMENSIONS AND MEMBER SIZES NOT SHOWN)

Copyright ASME International
Provided by IHS under license with ASME
No reproduction or networking permitted without license from IHS
Not for Resale

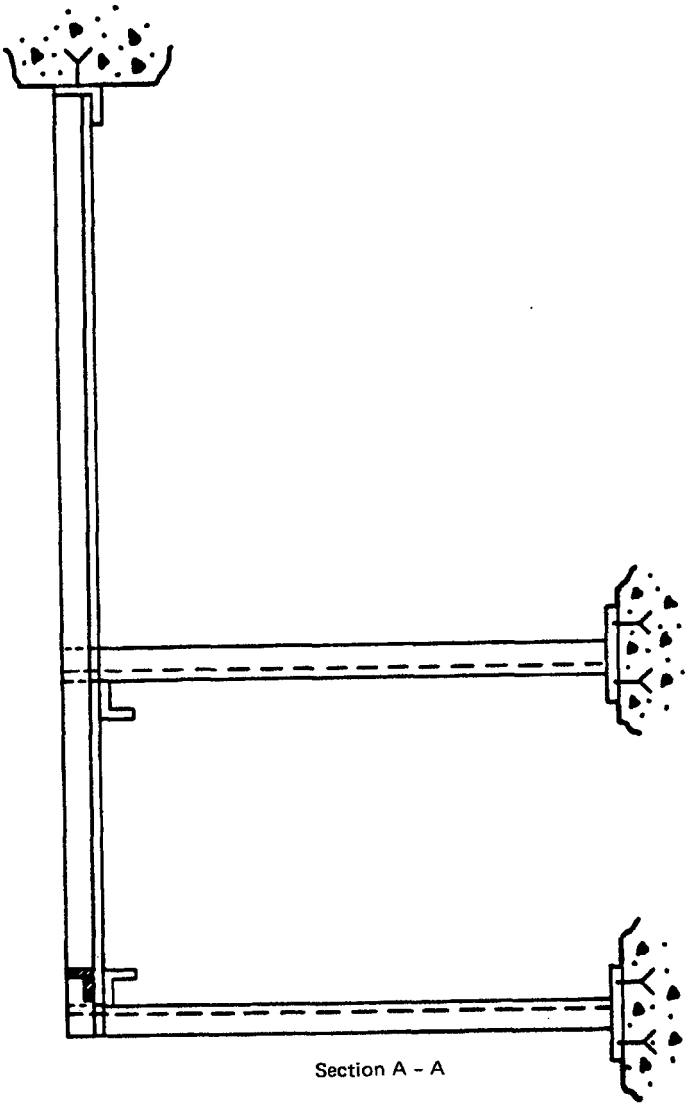

FIG. AA-A-7210-2 TYPICAL DUCT SUPPORT AS-BUILT
(DIMENSIONS AND MEMBER SIZES NOT SHOWN)

Copyright ASME International
Provided by IHS under license with ASME
No reproduction or networking permitted without license from IHS
Not for Resale

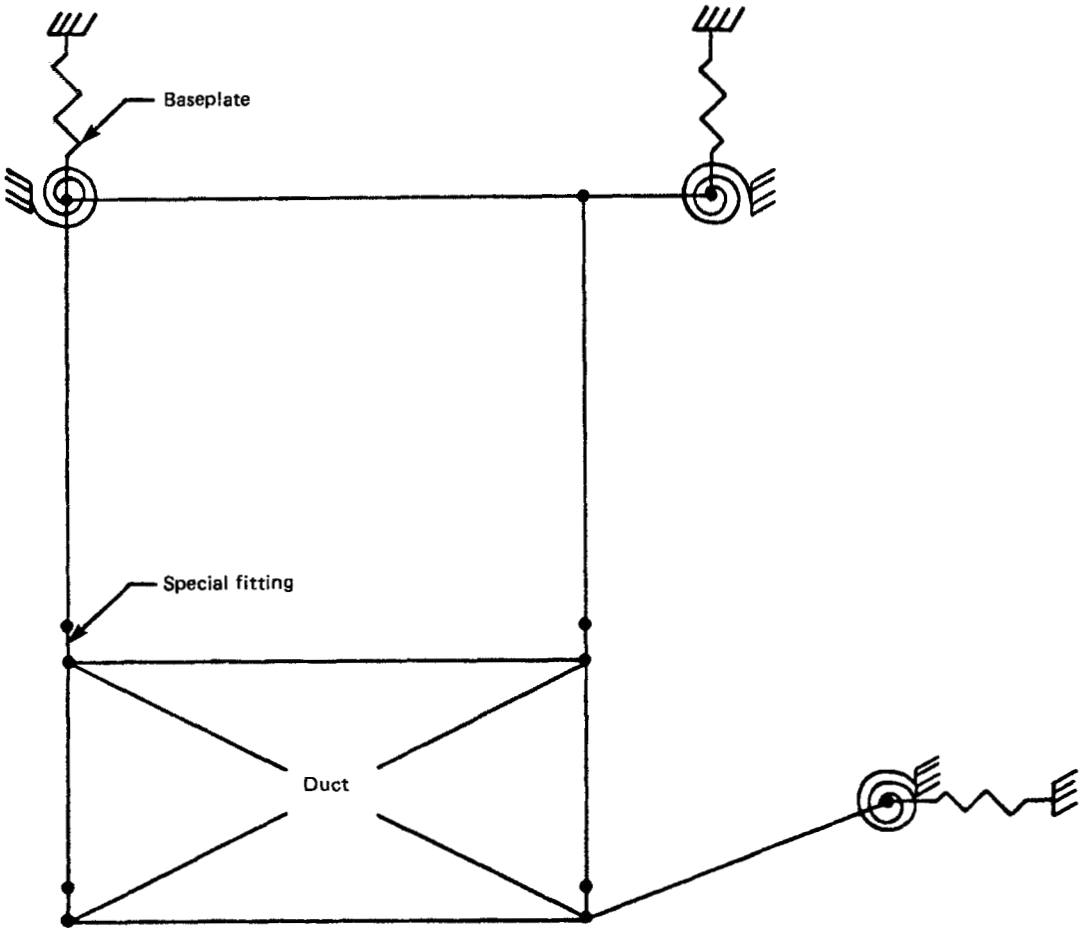

FIG. AA-A-7211 DUCTWORK SUPPORT BASEPLATE MODEL

Copyright ASME International
Provided by IHS under license with ASME
No reproduction or networking permitted without license from IHS
Not for Resale

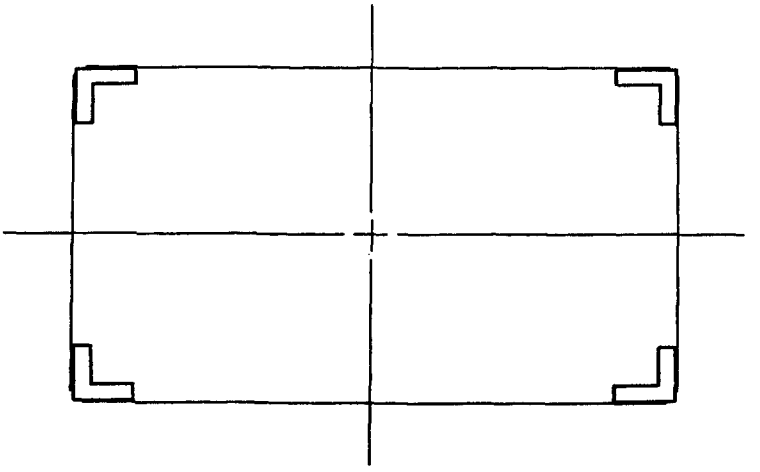

FIG. AA-A-7224 EFFECTIVE DUCT CROSS SECTION

AA-A-7220 ANALYSIS

AA-A-7221 Spring Calculations

A unit load is applied (divided evenly among the four duct nodes) to the hanger model in each principal direction. The average duct displacement is determined for each case, and the effective spring rates of the hanger are calculated in each principal direction.

AA-A-7222 Effective Hanger Weight

A unit load is applied to the hanger in each principal direction. The average duct displacement is determined for each case, and the effective hanger weight is calculated in each principal direction as the product of the effective spring rate from AA-A-7221 and the average duct displacement.

AA-A-7223 Allowable Loads

For each load case of AA-A-7221, the maximum allowable load which satisfies the following criteria is determined:

(a) an interaction formula relating reaction loads from the hanger model at the baseplate location to allowable baseplate or anchor bolt loads is satisfied;

(b) an interaction formula relating member end loads from the hanger model to appropriate weld stress or allowable joint fitting loads is satisfied;

(c) integrity of transverse braces is verified using member end loads from the hanger model;

(d) duct displacements are within allowable values;

(e) member stresses from the hanger model are within allowable values.

AA-A-7224 Duct Beam Properties

The equivalent beam properties of rectangular ducts are determined. The duct is fabricated with walls slightly buckled; therefore, only the corner area is considered when calculating bending properties. The effective corner length can vary with duct construction (see Fig. AA-A-7224). The shear modulus is reduced to account for shearing of gasket material and for web buckling. Equivalent corner length and shear moduli are best determined by modal test curve fits.

The equivalent beam properties of round ducts are determined. The full cross section is assumed effective in bending. The shear modulus is reduced to account for gasket material and for web buckling. Effective beam properties vary with ductwork construction and are best determined by modal test curve fits.

AA-A-7225 System Model

A system model of the duct run is developed using equivalent springs and masses at each duct location. The intermediate nodes between hanger locations are included to model significant midspan masses such as dampers (see Fig. AA-A-7225).

The fundamental frequency of the duct run is then determined; these results are used to determine appropriate seismic loads for the duct supports.

Copyright ASME International
Provided by IHS under license with ASME
No reproduction or networking permitted without license from IHS
Not for Resale

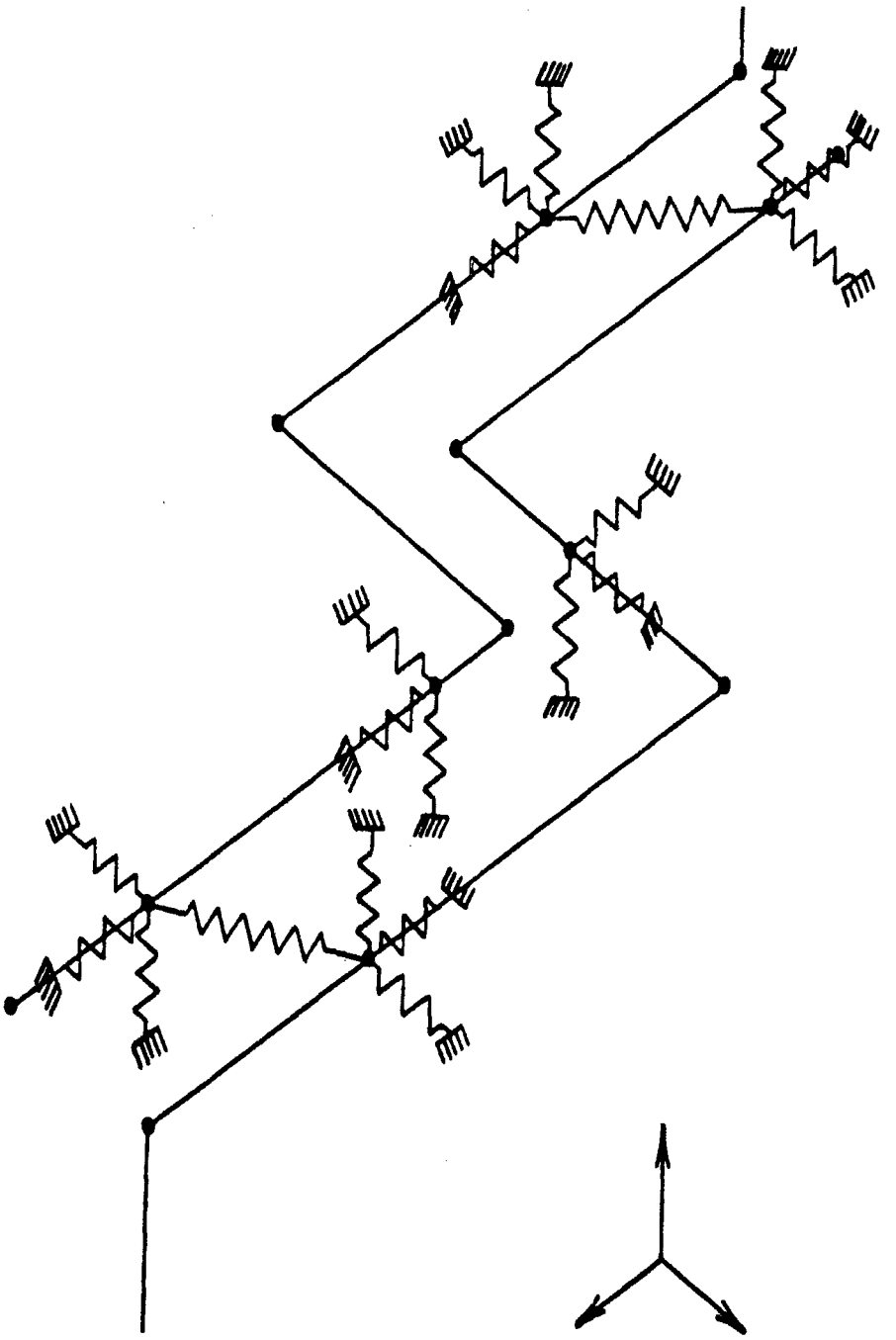

FIG. AA-A-7225 TYPICAL DUCT SYSTEM MODEL

Copyright ASME International
Provided by IHS under license with ASME
No reproduction or networking permitted without license from IHS
Not for Resale

The load cases are combined and loads in the hanger springs are determined. Each hanger is evaluated using an interaction formula relating hanger loads to allowable loads generated in AA-A-7223. The ductwork layout and system model may be adjusted until all hangers qualify.

The integrity of the duct itself is evaluated using member end loads from the system model. Interaction formulae can be used to establish that the duct is within allowable load limits established by analysis or test. Alternatively, duct integrity can be evaluated by relating maximum corner stress to theoretically equivalent allowable stress generated by test or analysis.

Copyright ASME International
Provided by IHS under license with ASME
No reproduction or networking permitted without license from IHS
Not for Resale

NONMANDATORY APPENDIX AA-B
QUALIFICATION BY TESTING

ARTICLE AA-B-1000
GENERAL

The test plan is an important document in that it provides the control for performing all aspects of the test program.

The test plan outline contained in this appendix is developed as an effort to provide guidance for minimum acceptability requirements and to instill a level of uniformity without asserting mandatory controls.

The commentary is provided for guidance to the user in preparing a test plan in accordance with the nonmandatory test plan outline. The commentary is arranged in one-to-one correspondence with the items shown in the typical test plan outline.

The discussion is general in nature and is intended to be representative only; the development of a test plan for specific equipment may vary due to unique features of particular equipment, but the level of presentation should be equivalent to that shown herein.

This commentary addresses only qualification testing done in a laboratory. It does not address in-situ testing, modal survey methods, or combined test and analysis.

Copyright ASME International
Provided by IHS under license with ASME
No reproduction or networking permitted without license from IHS
Not for Resale

ARTICLE AA-B-2000
OUTLINE FOR TYPICAL SEISMIC TEST PLAN

AA-B-2100 PURPOSE

AA-B-2200 SCOPE

AA-B-2300 TEST SPECIMENS

AA-B-2400 SPECIAL EQUIPMENT OR FIXTURES (IF REQUIRED)

AA-B-2500 TEST SETUP

(a) specimen orientation
(b) specimen/fixture interface
(c) test machine interface
(d) services for specimen operation
(e) special external loads

AA-B-2600 TEST REQUIREMENTS

(a) number of simultaneous axes for test (biaxial or triaxial)
(b) test machine capabilities
(1) force
(2) displacement
(3) frequency
(4) stiffness (machine/system/specimen coupled response)
(5) control (ability to produce required input motion)
(c) excitation
(1) type
(2) duration
(3) level
(d) instrumentation
(1) control
(2) structural monitoring
(a) accelerometers
(b) strain gages
(c) load cells
(d) stresscoat
(e) low voltage differential transmitters
(f) other
(3) equipment monitoring
(a) flow rates
(b) contact chatter
(c) input or output
(1) voltage
(2) amperage
(d) component cycling
(e) pressure boundary
(f) pressure level

AA-B-2700 ACCEPTANCE/FAILURE CRITERIA

AA-B-2800 TEST PROCEDURE

(a) calibration
(1) specimen
(2) test equipment/instrumentation
(b) sequence of tests
(1) exploratory tests
(2) order of specimens tested
(3) order of applied tests
(a) inspection
(b) operation under normal conditions
(c) operation under extreme conditions
(d) aging, if applicable (thermal, radiation, mechanical cycling)
(e) dynamic testing with in-process functional testing (OBE and SSE levels)
(f) postaccident testing, if applicable
(g) inspection of equipment
(h) fragility testing, if required
(c) in-process evaluation
(1) test input (comparison of TRS versus RRS)
(2) monitoring of seismic response
(3) monitoring of equipment function
(4) data acquisition
(d) test data
(1) data obtained or used as input
(2) type of record
(3) format of data
(4) level of reduction

AA-B-2900 FINAL REPORT

Copyright ASME International
Provided by IHS under license with ASME
No reproduction or networking permitted without license from IHS
Not for Resale

ARTICLE AA-B-3000
COMMENTARY ON OUTLINE FOR TYPICAL SEISMIC TEST PLAN

AA-B-3100 PURPOSE

The purpose should be a brief and distinct statement that clearly identifies the objectives of the test program.

AA-B-3200 SCOPE

This section should precisely define the boundaries of the test requirements for the specific equipment and test(s). Inclusion of sufficient detail in this section will ultimately result in increased efficiency and will minimize the possibility of changes. It should include, where appropriate, concise, detailed statements concerning the following:

(a) a general description of the specific test item(s) to be tested;

(b) any requirements for design, fabrication, modification, packaging, handling, or shipping of test items and test fixtures;

(c) mating/installation of test items and test fixtures on test machine;

(d) test setup, including special control and data acquisition instrumentation and recording requirements;

(e) any data organization, data reduction, data processing, or data analysis required by the Contractor;

(f) contractual terms

(1) the Contractor's responsibility for providing labor or other resources for repairs, modifications, or other corrective actions;

(2) the Contractor's responsibility for retest, whether required because of failure of test items, test fixtures, test equipment, or other causes;

(3) whether the testing is straightforward qualification testing to specific requirements, or whether it is of a research and development nature (involving time and materials);

(g) any other identifiable boundaries or parameters that will enhance the Contractor's ability to understand the requirements, estimate, and schedule the testing.

AA-B-3300 TEST SPECIMENS

A unique identification and quantities of the specific items to be tested should be provided. This should include, where appropriate, tag number, model, type, class, size, or other distinguishing identification.

AA-B-3400 SPECIAL EQUIPMENT OR FIXTURES

Any special equipment or test fixtures should be identified, and an assignment for their responsibility should be made. If not provided by the Contractor, these equipment or fixtures must be provided to the Contractor (with adequate instructions for use), or, if the Contractor is to buy or fabricate them, adequate definition must be provided for fabrication purposes.

AA-B-3500 TEST SETUP

The test plan should include a complete description of the total test setup, including, but not limited to, the following:

(a) Specimen Orientation. Depending upon the size of the test items and the capabilities of the test machine, it may be possible to test multiple axes (two or three). For very large equipment, it may be possible to test only one axis at a time; however, qualification by single-axis testing should be avoided (see AA-4358). The test items may be designed such that they will

Copyright ASME International
Provided by IHS under license with ASME
No reproduction or networking permitted without license from IHS
Not for Resale

function in only one attitude, thus requiring that the test machine be manipulated to excite certain axes of the test items.

Whatever the requirements, the orientation of the specimen must be identified, consistent with its operational limitations and the capabilities of the test machine.

(b) Specimen/Fixture Interface. Where a special test fixture is required, the specimen/fixture interface must be defined, and any performance requirements placed upon the fixture, such as stiffness, must be identified and verified prior to or during the test. Methods of attachment of the specimen to the fixture, such as hole patterns, welding, materials, or other items, must be specified and must represent the actual installation.

(c) Test Machine Interface. The specimen/test machine, or fixture/test machine interface(s), or both, must be specified. This interface must represent, to an acceptable degree, the anticipated attachment characteristics of the actual installation.

(d) Service for Specimen Operation. Where the testing is required to demonstrate continued operation during and following a seismic excitation and where this operation can only be verified by measuring an equipment operational output such as fluid flow, electrical current or voltage, and heating or cooling capability, external services may have to be supplied. These services may be an oil supply, water supply, air supply, electrical source, electrical load, or other services. These requirements should be clearly defined in the test plan.

(e) Special External Loads. Some test items, during normal operation, are acted upon by mechanical or other loads produced by other equipment. These loads may result from operation of attached motors, fans, hydraulic, mechanical, or pneumatic actuators, or other reactive types of equipment. Where these force, momentum, or torque producing attached components are significant, the magnitude and orientation of these reactions must be simulated.

AA-B-3600 TEST REQUIREMENTS

(a) Number of Simultaneous Axes for Test. Depending upon the size of the test item and the capabilities of the test machine, it may be possible to test multiple axes: three simultaneous axes of test are preferable. For very large equipment, it may only be possible to test two or even a single axis, contingent upon test machine capabilities and availability. Justification must be developed for testing with single-axis input motion (AA-4358). This justification could be based upon a unique feature of the test item (directional sensitivity). It may be possible to increase the excitation level and test the individual axes separately where the test item is too large for existing test machines.

(b) Test Machine Capabilities. Before a Contractor is selected to perform the seismic testing, a thorough review of test machine capabilities should be made. Assurance should be established that the test machine selected can meet the requirements. It should be determined that

(1) the test machine has the capability, including reserve, to provide the necessary force to drive the test table and the test item to the required accelerations.

(2) machine displacement capabilities are acceptable. Because many test machines are displacement limited in the low frequency range, if the test requirements include frequencies below 5 Hz, a check of the machine displacement capabilities should be made and compared to those required.

(3) machines that are displacement-limited at the low end of the frequency stroke capability. Similarly, high frequency response, especially precise control at high frequencies, is often difficult to attain on very large machines. It is recommended that a plot of test table response (throughout the frequency range involved) be required prior to selection of a test table. This is recommended in lieu of theoretical plots, such as the usual force/frequency/velocity/acceleration charts. A degree of informed judgment is necessary in the critique of actual response plots to recognize what is and what is not acceptable.

(4) the plot recommended in *(b)(3)* above will provide clues to the existence of unwanted system resonances in the frequency range of interest. This plot incorporates participation by structures, mechanisms, oil columns, bearings, servos, and actuators into an integral response. It does not, however, include the effects of the mass and center of gravity of the test item, which may be significant. A judgment should be made as to the necessity of securing a plot as mentioned in *(b)(3)* above using a simulated test item, before committing to a particular test machine. Large test item weights or high centers of gravity, or both, compared to that of the test table are major factors entering into this decision.

(5) the plot recommended in *(b)(3)* will show the control capabilities of the bare test table. If a plot is made using a simulated test item as in *(b)(4)* above, control capabilities will be even better demonstrated.

(c) Excitation. All aspects of the required excitation should be defined:

(1) the type of excitation, such as sine sweep, sine dwell, sine beat, time history, response spectra (either synthesized or extracted from a particular time

Copyright ASME International
Provided by IHS under license with ASME
No reproduction or networking permitted without license from IHS
Not for Resale

history), complex wave, or other, should be shown in the test plan;

(2) the duration of the excitation, the sweep rate, or the number of beats as well as the cycles per beat should be identified as appropriate;

(3) the full acceleration level of the excitation and any intermediate level(s) that may be required should also be included in the plan.

(d) Instrumentation. Instrumentation is generally of three types: control, structural monitoring, and functional monitoring.

(1) Control instrumentation is necessary to provide systems responsible for controlling the test input. This equipment is an integral part of the test machine.

(2) Structural monitoring may be required where limitations of accelerations, stresses, strains, displacements, or forces are important to the function of the test item, or are required by a code or specification. Well-known standard components are available for measuring these parameters, either statically or dynamically.

(3) Pass/fail indicators for some equipment functions may involve special measurements of equipment output. Both standard and nonstandard equipment may be used for these measurements.

AA-B-3700 ACCEPTANCE AND FAILURE CRITERIA

Acceptance and failure criteria are not always readily quantifiable. Engineering judgment to identify and assign somewhat arbitrary, but meaningful, limits to measurable parameters is sometimes required. Other cases are more easily defined. The equipment specification or specific code section may be explicit as to what constitutes failure. An interruption of flowrate, voltage, current, or other equipment output may be considered a failure, and these parameters are readily measurable. Excessive contact chatter, violation of a pressure boundary, excessively high or low pressures, or failure for a component to cycle may also constitute failure. Failure criteria should be realistic; and, if possible, allowances should be made for insignificant anomalies that are unimportant to the function of the equipment, consistent with the service level being tested. Acceptance and failure criteria must be identified in the test plan.

AA-B-3800 TEST PROCEDURE

The test procedure should be given in the test plan. It should be defined in considerable detail and preferably in the sequence in which it will be performed.

(a) Any required calibration of either the test item, test equipment, or instrumentation must be included in the test procedure.

(b) The order of test items, the sequence of testing, and a definition of the specific tests must be clearly defined.

(c) A constant evaluation of the in-process work must be made and should be a distinct requirement of the test procedure. Feedback or process sampling must be continuous to assure that the test input is accurate, that the specimen response is consistent with other known factors, that the equipment continues to function (or that a failure is identified), and that the type, quality, and quantity of data is acceptable. Failure to perform in-process monitoring may result in additional tests, additional time, and unnecessary wear and tear on the test item.

(d) The data items (stresses, strains, flow rates, voltage, current, chatter time, etc.), type of data record (permanent, nonpermanent, oscillograph, magnetic tape, hard record, movies, videotape, etc.), data format, and the degree to which the Contractor is to reduce or otherwise process the test data must be specified.

AA-B-3900 FINAL REPORT

The final report, upon succesful completion of the testing, shall serve as a qualification document for the test item. The basis for the qualification determination must be fully explained. The final report should contain, as a minimum

(a) the objective of the test;

(b) a description of the test item and its function:

(c) a description of the specific function(s) or feature(s) to be verified by the test;

(d) the test procedure;

(e) a synopsis of the test results;

(f) an appendix for the test data which contains selected data and references the location of data taken but not submitted;

(g) summary, conclusions, and recommendations;

(h) all test anomalies along with their disposition;

(i) any other pertinent supporting data; and

(j) signature (preferably a professional engineer attestation) and date.

Copyright ASME International
Provided by IHS under license with ASME
No reproduction or networking permitted without license from IHS
Not for Resale

NONMANDATORY APPENDIX AA-C
QUALIFICATION BY A COMBINATION OF ANALYSIS AND TESTING

ARTICLE AA-C-1000
INTRODUCTION

Many factors control the design of a qualification program. If qualification is to be achieved by analysis only, all assumptions used in the analysis must be justified. If testing alone is used for qualification, all applicable loads shall be simulated during the test, unless it can be shown that the simultaneous application of certain loads is not necessary for assuring the safety function.

Copyright ASME International
Provided by IHS under license with ASME
No reproduction or networking permitted without license from IHS
Not for Resale

ARTICLE AA-C-2000
QUALIFICATION BY ANALYSIS ONLY

Analytical calculations alone may be adequate as a qualification method in the following situations:

(a) for equipment that requires only that structural integrity be maintained to assure the performance of the safety function;

(b) for equipment that is structurally simple;

(c) for equipment having a response that is linear or a simple nonlinear behavior;

(d) for equipment in which the superposition of load conditions, or combinations, or both, are too complex for testing.

Copyright ASME International
Provided by IHS under license with ASME
No reproduction or networking permitted without license from IHS
Not for Resale

ARTICLE AA-C-3000
QUALIFICATION BY TESTING ONLY

Qualification by testing only is recommended when the following conditions are fulfilled:

(a) the structural configuration of the equipment is highly complex and beyond the capability of mathematical modeling techniques;

(b) the response of the equipment is expected to be highly nonlinear.

AA-C-3100 TESTING PROGRAM CONSIDERATIONS

When a qualification by testing program is being considered, the following factors are important to the validity of the program:

(a) the test machine is capable of producing the required motion;

(b) the applicable loads are of a simple nature, or it is possible to simulate them;

(c) the test machine allows the simulation of actual mounting;

(d) it is possible to monitor the functional capability of active equipment during the test.

Copyright ASME International
Provided by IHS under license with ASME
No reproduction or networking permitted without license from IHS
Not for Resale

ARTICLE AA-C-4000
SUPPORTING TEST

AA-C-4100 COMMON APPLICATIONS

Supporting tests may be used to determine

(a) deflection limits within which operability is maintained;

(b) dynamic parameters needed for constructing or verifying mathematical models;

(c) damping values;

(d) assumptions to be used in the analysis; and

(e) the amount of nonlinearity involved.

AA-C-4200 DYNAMIC AND STATIC SUPPORTING TESTS

Supporting tests may be static or dynamic. A dynamic test shall be conducted using a test machine or single point exciters.

After collecting the needed information from supporting tests, analytical techniques shall be used to show, in a reliable way, that the structural integrity or operability of equipment, or both, are maintained. It must be noted that, without supporting tests, analytical calculations may not provide sufficient evidence for operability assurance.

AA-C-4210 DYNAMIC SUPPORTING TESTS

For dynamic supporting tests, the equipment shall be excited by dynamic forcing functions by using a shake table or single point exciters applied at a sufficient number of points. The excitations shall be of sufficient strength to excite all significant modes. Typical data obtained from these tests are

(a) dynamic characteristics of the equipment (natural frequencies, mode shapes, and damping factors);

(b) cross-coupling effects, i.e., the response in any direction due to the excitation in any other direction (in the locations where installing accelerometers is impractical, the cross-coupling may be estimated based on the response at the available locations); and

(c) the significance of the response of the equipment to vibratory motion to determine the necessity of combining the nozzle loads with seismic loads.

AA-C-4220 STATIC SUPPORTING TESTS

Static supporting tests are conducted by applying static forces to the equipment. Typical data obtained from these tests are

(a) static deflections and flexibility parameters that are needed for constructing a mathematical model; and

(b) distortions, due to nozzle loads, for example, and the deformation limits within which the equipment would maintain its functionability.

Copyright ASME International
Provided by IHS under license with ASME
No reproduction or networking permitted without license from IHS
Not for Resale

NONMANDATORY APPENDIX AA-D
DESIGN OF DUCTWORK BY ANALYSIS (SUGGESTED APPROACH)

ARTICLE AA-D-1000
INTRODUCTION

This appendix is nonmandatory and presents suggested approaches to the analysis of ductwork subjected to various loadings. Both circular and rectangular ductwork are considered together with stiffener analysis for each type of ductwork. Analysis of ductwork supports is not specifically addressed in this appendix.

Where applicable, the requirements of Article AA-4000 are referenced with the solution technique. Other methods may be used to determine the adequacy of ductwork for design loadings. These include the techniques presented in the Sheet Metal and Air Conditioning Contractor's National Association (SMACNA) Rectangular Industrial Duct Construction Standards. Also, design qualification of ductwork by testing is another effective way to determine adequacy under design loadings. Article AA-4000 should be consulted for testing requirements.

Copyright ASME International
Provided by IHS under license with ASME
No reproduction or networking permitted without license from IHS
Not for Resale

ARTICLE AA-D-2000
CIRCULAR DUCTWORK

AA-D-2100 INTRODUCTION

The major factor to consider in the design of circular ductwork is buckling. The following sections provide techniques for designing circular ductwork that can withstand various design loads.

AA-D-2200 ALLOWABLE DESIGN STRESSES: SERVICE LEVEL A

The maximum normal allowable stresses to be used in design for Service Level A load combinations given in Table SA-4212 shall not exceed the following stresses.

AA-D-2210 AXIALLY LOADED COMPRESSION MEMBERS

Ducts subjected to axial loads can be designed so that the average axial compression stress, P/A, does not exceed the values presented below for the appropriate configuration. Both column buckling of the entire section and local buckling of the shell must be checked and the controlling allowable stress used in the design.

Equation (1a) illustrates combined column and local buckling for a circular cross section.
where

for $\sigma_e \leq \sigma_y/2$

$$\sigma_o = 0.521 \frac{\Pi^2 E}{(KL/r)^2} \tag{1a}$$

for $\sigma_e > \sigma_y/2$

$$\sigma_o = \frac{\sigma_y[1 - \sigma_y/4\sigma_e]\,[1 - (1 - R^2)\,(1 - \alpha)]}{\frac{5}{3} + \frac{3}{8}R - \frac{R^3}{8}} \tag{1b}$$

Column buckling:

where $D/t > 0.441 \dfrac{E}{\sigma_y}$

For cylindrical sections, the general buckling expressions may be used [see Article AA-D-5000 (Yu 1985)].

For $KL/r < C_c$

$$\sigma_o = \left[0.522\ \sigma_y - \frac{(KL/r)^2 \sigma_y^2}{1494}\right] \tag{2a}$$

For $KL/r \geq C_c$

$$\sigma_o = \frac{151900}{(KL/r)^2} \tag{2b}$$

Local buckling:

For $D/t \leq 3300/\sigma_y$

$$\sigma = 0.60\sigma_y \tag{3}$$

For $3300/\sigma_y < D/t \leq 13000/\sigma_y$

$$\sigma = \frac{662}{D/t} + 0.399\ \sigma_y \tag{4}$$

Copyright ASME International
Provided by IHS under license with ASME
No reproduction or networking permitted without license from IHS
Not for Resale

For $D/t > 13000/\sigma_y$

$$\sigma = \frac{5860}{D/t} \quad (5)$$

where

α = area factor, $= \left(\frac{0.037}{D\sigma_y/tE} + 0.667\right) \leq 1.0$
D = outside duct diameter, in.
t = duct thickness, in.
$C_c = \sqrt{2\pi^2 E/\sigma_y}$
P = total axial load, kips
A = full, unreduced cross-sectional area of the duct, in.^{2}
σ_o = allowable compression stress for column buckling under axial loading, ksi
σ_l = allowable compression stress for local buckling under axial loading, ksi
E = modulus of elasticity, typically 29,500 ksi
K = effective length factor
L = unbraced length of member, in.
r = radius of gyration of the unreduced cross section, $\sqrt{I/A}$, in.
σ_e = elastic buckling stress $= \frac{\pi^2 E}{(KL/r)^2}$ ksi
σ_y = material yield stress, ksi
$R = \sqrt{(\sigma_y/\sigma_e)}$

AA-D-2220 CYLINDRICAL TUBULAR MEMBERS IN BENDING

The local-buckling behavior in the compression portion of a cylindrical tubular member subjected to a bending load is similar to the local-buckling behavior under axial compression. Therefore, eqs. (3), (4), and (5) of AA-D-2210 may be used to determine both local-buckling stresses due to axial compression as well as the onset of flexural buckling. According to published research [see Article AA-D-5000 (Gerard and Becker 1957)], this approach leads to a conservatism of about 30% in the case of flexural buckling. Section properties for stress calculations shall be based on the full section.

As an option, more accurate determination of the allowable bending stress for circular sections under bending moments alone can be found as follows for ductwork where $D/t \leq 0.441E/\sigma_y$. [See Article AA-D-5000 (*Specification for the Design of Cold-Formed Steel Structural Members* and Yu 1985)].

For $D/t \leq 0.070\ E/\sigma_y$

$$\sigma_a = 0.75\sigma_y \quad (6)$$

For $0.070\ E/\sigma_y < D/t \leq 0.319\ E/\sigma_y$

$$\sigma_a = \left[0.581 + 0.012\,\frac{(E/\sigma_y)}{D/t}\right]\sigma_y \quad (7)$$

For $0.319\ E/\sigma_y < D/t \leq 0.441\ E/\sigma_y$

$$\sigma_a = [0.196\ E/(D/t)] \quad (8)$$

where

σ_a = the allowable bending stress, ksi, based on the section modulus of the full, unreduced cross section

AA-D-2230 TORSION

The normal allowable shear stress, v_t, due to local buckling of a circular tubular member subjected to torsion shall not exceed the following [see Article AA-D-5000 (Schilling 1965)]:

$$v_t = 0.395aE\left(\frac{t}{R}\right)^{5/4}\left(\frac{R}{L}\right)^{1/2} \quad (9)$$

$$a = \text{plasticity reduction factor} = 1.16\,\frac{E_s}{E}$$

where

v_t = allowable shear stress due to torsion, ksi
E = modulus of elasticity, typically 29,500 ksi
E_s = secant modulus, ksi
R = outside duct radius, in.
t = duct plate thickness, in.
L = length of duct between supports, in.

The above equation is specifically for circular ducts with pinned ends; the critical buckling stress of a circular duct with clamped ends would be approximately 10% higher.

A method for calculating the plasticity reduction factor can be found in Article AA-D-5000 (Schilling 1965).

AA-D-2240 TRANSVERSE SHEAR

The allowable shear stress, σ_v, due to local buckling of a circular tubular member subjected to transverse shear shall not exceed the following:

Copyright ASME International
Provided by IHS under license with ASME
No reproduction or networking permitted without license from IHS
Not for Resale

$$\sigma_v = 0.493aE(t/R)^{5/4}\,(R/L)^{1/2} \qquad (10)$$

[see Article AA-D-5000 (Lunquist 1935)]

$$a = \text{plasticity reduction factor} = 1.16\frac{E_s}{E}$$

where

σ_v = allowable transverse shear stress, ksi
E = modulus of elasticity, typically 29,500 ksi
E_s = secant modulus, ksi
R = outside duct radius, in.
t = duct plate thickness, in.
L = length of duct between supports, in.

A method for calculating the plasticity reduction factor can be found in Article AA-D-5000 (Schilling 1965)

AA-D-2250 COMBINED AXIAL COMPRESSION AND BENDING

When subject to both axial compression and bending loads, members shall be proportioned so that the interaction of these loads does not overstress the ductwork. [See Article AA-D-5000 (*Specification for Design of Cold-Formed Steel Structural Members*)]

The subscripts x and y in the above equations indicate the axis of bending about which a particular stress or design property applies.

For $\frac{f_a}{\sigma_c} \le 0.15$ where σ_c is the lesser of σ_o and σ (from AA-D-2210).

$$\frac{f_a}{\sigma_c} + \frac{f_{bx}}{\sigma_a} + \frac{f_{by}}{\sigma_a} \le 1.0 \qquad (11)$$

For $\frac{f_a}{\sigma_c} > 0.15$

$$\frac{f_a}{\sigma_c} + \frac{f_{bx}}{\left(1 - \frac{f_a}{F'_{e_x}}\right)\sigma_a} + \frac{f_{by}}{\left(1 - \frac{f_a}{F'_{e_y}}\right)\sigma_a} \le 1.0 \qquad (12)$$

where

f_a = the applied compressive stress, ksi
f_b = the applied bending stress, ksi, in the x or y direction

$$F'_e = 0.521\frac{\pi^2 E}{(KL/r)^2}$$

σ_a = the allowable bending stress, ksi

AA-D-2260 COMBINED TORSION AND AXIAL COMPRESSION OR BENDING

Experimental work [see Article AA-D-5000 (Gerard and Becker 1957)] has shown that the following nonlinear interaction equation predicts the behavior of ducts subjected to combined torsion and bending or combined torsion and axial compression:

$$\left(\frac{f_c}{\epsilon_c}\right)^2 + \left(\frac{\sigma_v}{\epsilon_v}\right)^2 \le 1.0 \qquad (13)$$

where

Σ_c = allowable compressive stress due to axial loading or bending, ksi
Σ_v = allowable torsional shear stress, ksi
f_c = applied compressive stress due to axial loading or bending, ksi
σ_v = applied torsional shear stress, ksi

AA-D-2270 COMBINED TORSION AND TRANSVERSE SHEAR

The combined shear stresses due to torsion and transverse shear shall be evaluated based on the following linear interaction equation:

$$\frac{f_t}{v_t} + \frac{f_v}{\sigma_v} < 1.0 \qquad (14)$$

where

f_t = applied torsional shear stress, ksi
v_t = allowable torsional shear stress, ksi
f_v = applied transverse shear stress, ksi
σ_v = allowable transverse shear stress, ksi

AA-D-2280 PRESSURE

For typical applications, the duct internal pressure does not exceed 10 in. water gage. The tensile and compressive stresses caused by this pressure level are low. The following equations may be used to demonstrate that pressure-induced stresses can usually be neglected.

(a) Positive Internal Pressure. Positive internal pressure causes tensile stresses within the duct and actually

Copyright ASME International
Provided by IHS under license with ASME
No reproduction or networking permitted without license from IHS
Not for Resale

reduces the tendency toward buckling. The tensile stresses due to internal pressure are:

$$\sigma_H = \frac{P'R}{t} \tag{15}$$

$$\sigma_L = \frac{P'R}{2t} \tag{16}$$

where
P' = internal pressure, ksi
R = outside duct radius, in.
t = duct plate thickness, in.
σ_H = hoop stress, ksi
σ_L = longitudinal stress, ksi

(b) Negative Internal Pressure. The critical hoop stress results from an external or negative internal pressure. The critical elastic buckling pressure for ducts subjected to external pressure is given below [see Article AA-D-5000 (Timoshenko and Woinowsky-Krieger 1959 and Johnston 1976)]:

$$P'_{CR} = \frac{2.60E}{\left(\frac{L}{D}\right)\left(\frac{D}{t}\right)^{2.5}} \text{ for } 10 < \frac{1.818\,L}{D}\left(\frac{D}{t}\right)^{1/2} < \frac{D}{t} \tag{17}$$

$$P'_{CR} = 2.2E\left(\frac{t}{D}\right)^{3} \text{ for } \frac{1.818L}{D}\left(\frac{D}{t}\right)^{1/2} < \frac{4D}{t} \tag{18}$$

where
P'_{CR} = critical elastic buckling pressure, ksi
L = spacing of duct stiffeners, in.
D = duct diameter, in.
t = duct plate thickness, in.
E = modulus of elasticity, typically 29,500 ksi

The allowable pressure can be obtained by applying a factor of safety of 1.67 to the critical elastic buckling pressure calculated above.

AA-D-2281 *Compression in Combination With* Internal Pressure

Internal pressure stiffens the duct against buckling from external loads and reduces the net compressive stress in the section. For conservatism, the internal pressure should be ignored and the external load used for calculation. If the internal pressure is to be included, then eq. (19) should be used:

$$\frac{\sigma}{\sigma_{CR}} - \frac{P'}{P'_{Allow}} \le 1.0 \tag{19}$$

where
P' = applied internal pressure, ksi
P'_{Allow} = allowable internal pressure, ksi
σ = applied axial stress, ksi
σ_{CR} = allowable axial stress, ksi

AA-D-2282 Compression in Combination With External Pressure

The following interaction equation can be used to predict the behavior of a duct subjected to compressive loads and external pressure.

$$\frac{\sigma}{\sigma_{CR}} + \frac{P'}{P'_{CR}} \le 1.0 \tag{20}$$

where
σ, σ_{CR} = (defined in AA-D-2281)
P' = applied external pressure, ksi
P'_{CR} = allowable external pressure, ksi

Applying the appropriate factor of safety to the allowable pressure and stress will convert the interaction equation to an equation for design purposes.

AA-D-2300 ALLOWABLE DESIGN STRESSES FOR SERVICE LEVEL B, C, OR D

Members and assemblies subject to stresses produced by Service Level B, C, or D load combinations shown in Table SA-4212, may be proportioned for unit stresses 1.3 (Service Level B) or 1.6 (Service Level C or D) times greater than those specified in AA-D-2210 through AA-D-2240 for Service Level A load combinations. However, the increased stress allowables shall not exceed the following limits:

Axially loaded compression members:

$$\sigma_o \text{ (max.)} = 0.9\,\sigma_y \tag{21}$$

$$\sigma \text{ (max.)} = 0.9\,\sigma_y \tag{22}$$

Copyright ASME International
Provided by IHS under license with ASME
No reproduction or networking permitted without license from IHS
Not for Resale

Members in bending:

$$\sigma_a \text{ (max.)} = 0.9\ \sigma_y \tag{23}$$

Members subjected to torsion:

$$v_t \text{ (max.)} = \frac{0.9\ \sigma_y}{\sqrt{3}} \tag{23a}$$

Members subjected to transverse shear:

$$\sigma_v \text{ (max.)} = \frac{0.9\ \sigma_y}{\sqrt{3}} \tag{24}$$

where

σ_o, σ, σ_a, v_t, σ_v, and σ_y = (defined previously)

AA-D-2400 STIFFENER DESIGN

The presence of external loads applied to the thin-shell ductwork may require that the duct be reinforced. The reinforcement may take the form of external ring stiffeners applied at intervals along the duct system. Alternatively, a thicker wall duct may be used in the location where the duct may be subject to buckling. Generally, the most efficient method is the use of ring stiffeners at intervals, and particularly at supports where large support loads may increase the chances of collapse of the duct.

The presence of stiffeners is advised where large external loads, such as pressure and shear, may cause buckling. The added stiffening effect of rings will have a negligible effect in preventing buckling due to bending, torsion, or axial loads. Therefore, in applications where bending is the governing load, the duct wall thickness should be increased or the duct span should be decreased in order to prevent buckling, and no credit should be taken for the presence of stiffeners unless a detailed structural analysis of the duct system is performed. Thus, the performance of the duct can be predicted by traditional beam analysis of the duct system without requiring complex analysis, unless stiffener interaction with the duct system stiffness is required (see Article AA-D-4000).

The stiffener may be designed in accordance with the recommendations of SMACNA, or as indicated below.

AA-D-2410 STIFFENER SPACING

When the preceding equations on duct design indicate that the duct is unacceptable in its present condition, stiffeners may need to be added, or the space between stiffeners reduced.

The maximum allowable span between stiffeners can be found by solving the equation for critical pressure or critical shear load for the maximum allowable span for the known loads.

For transverse shear, the maximum span between stiffeners is [from eq. (10)]:

$$L = \frac{(0.790)^2 a^2 E^2 \left[\frac{t}{R}\right]^{2.5} R}{(1.67)^2\ \sigma_v^2} \tag{25}$$

where

L = stiffener spacing, in.

σ_v = transverse shear stress, ksi

a, E, t, R, and σ_v = (defined previously)

For external pressure P', the maximum span between stiffeners is [from eq. (17)]:

$$L = \frac{2.60\ E}{1.67 \left[\frac{P'}{D}\right] \left[\frac{D}{t}\right]^{2.5}}$$

for

$$10 < \frac{1.818L}{D} \left[\frac{D}{t}\right]^{1/2} < \frac{D}{t} \tag{26}$$

Ducts where $1.818(L/D)(D/t)^{1/2}$ is less than 10 are short ducts and should not require stiffeners.

As an alternative, the spacing recommendation contained in SMACNA may be used as an initial spacing value. The spacing length l can then be used in the equation for critical pressure and shear to verify that the loads do not exceed the critical values.

AA-D-2420 RING STIFFENER ANALYSIS

The ring stiffeners are generally rolled equal-leg angles welded to the duct. This type of companion angle construction can be based on the spacing equation above and the equations presented below for ring design.

Copyright ASME International
Provided by IHS under license with ASME
No reproduction or networking permitted without license from IHS
Not for Resale

For external pressure on a ring of mean radius R (in.) the critical buckling pressure is [see Article AA-D-5000 (Roark and Young 1975)]:

$$P'_{CR} = \frac{3EI}{R^3} \quad (27)$$

where

E = modulus of elasticity, ksi
I = moment of inertia of ring about its longitudinal axis, in.^{4}
P'_{CR} = critical elastic buckling pressure, ksi

For a concentrated diametric load of W(kips), the ring can be designed based on the following relationships [see Article AA-D-5000 (Roark and Young 1975)]:

$$D_H = 0.137 \frac{WR^3}{EI} \quad (28)$$

$$D_v = -0.149 \frac{WR^3}{EI} \quad (29)$$

$$M_{max.} = 0.3183\ WR \quad (30)$$

$$\sigma_{max.} = \frac{0.3183\ WRC}{I} \quad (31)$$

where

D_H = horizontal diametric deflection, in.
D_v = vertical diametric deflection, in.
$M_{max.}$ = maximum moment in ring, K-in.
W = diametric load, kips
$\sigma_{max.}$ = maximum bending stress, ksi
C = distance from center of section to outer face, in.

Note that C and I are functions of the ring section about its own axis. The load W is a function of the adjacent spans and the deadweight and seismic loads that are applicable. If the desired stiffener size does not meet the allowable stresses for the actual load W then consideration should be given to increasing the size of the ring or decreasing the span that will reduce the load W being applied.

Copyright ASME International
Provided by IHS under license with ASME
No reproduction or networking permitted without license from IHS
Not for Resale

ARTICLE AA-D-3000
RECTANGULAR DUCTWORK

AA-D-3100 INTRODUCTION

The methods presented in this article are suggested means of approach for analysis of rectangular ductwork.

The presence of compressive loads due to pressure or external forces requires that the ductwork and supports be designed properly for these loads. Buckling is the major concern in the design of rectangular ductwork and is the governing failure mode to be considered in design. The advantage of using rectangular ductwork is that it exhibits significant post-buckling strength. Plates possessing this behavior can accept significant amounts of load after they have exceeded the elastic buckling load.

The methods contained in this article, or other sources may be used. However, the requirements of Article SA-4000 must be met.

AA-D-3200 RECTANGULAR DUCT ANALYSIS

Properties of sections (cross-sectional area, moment of inertia, section modulus, radius of gyration, etc.) shall be determined in accordance with conventional methods of structural design. Properties shall be based on the full cross section of the members (or net sections where applicable) except where the use of a reduced cross section, or effective design width, is required by the provisions of the American Iron and Steel Institute's (AISI) Specification for the Design of Cold-Formed Steel Structural Members [see Article AA-D-5000 (*Specifications for the Design of Cold-Formed Steel Structural Members*)].

Use of AISI Specification provisions, however, with the specified maximum effective design widths and heights (w/t and h/t ratios where w and h are the width and height of the duct respectively), may result in duct thicknesses in excess of those commonly used for ductwork constructed to, or similar to, SMACNA specifications. Tests performed have demonstrated that ducts constructed to SMACNA specifications can adequately withstand specified dynamic loads. In effect, the following options may be utilized to calculate properties of ductwork sections.

(a) AISI specifications

(b) Testing as permitted by the AISI specification

(c) Finite element models using large displacement criteria

Option (c) can be used to extend the range of applicablility of the AISI equations and/or arrive at other suitable provisions in place of the AISI provisions. In addition, these models can be used to develop values for pressure-induced stresses not readily covered by the AISI provisions.

AA-D-3300 ALLOWABLE DESIGN STRESSES: SERVICE LEVEL A

The maximum normal allowable stresses to be used in design for Service Level A load combinations given in Table SA-4212 shall not exceed the following equations.

AA-D-3310 AXIALLY LOADED COMPRESSION MEMBERS

The average axial stress, P/A, in compression members shall not exceed the following values of σ_{a1} [see Article AA-D-5000 (*Specifications for the Design of Colf-Formed Steel Members* and Yu 1985)]:

for $\sigma_e \le \dfrac{\sigma_y}{2}$

$$\sigma_{a1} = \frac{\sigma_e Q}{1.92} \tag{32}$$

Copyright ASME International
Provided by IHS under license with ASME
No reproduction or networking permitted without license from IHS
Not for Resale

for $\sigma_e > \sigma_{y/2}$

$$\sigma_{a1} = \frac{Q\sigma_y(1 - {}^{\sigma}y/4\sigma_e)}{1.92} \quad (33)$$

where

P = total load, kips
A = full, unreduced cross-sectional area of the member, in.^{2}
$\sigma_e = \dfrac{\pi^2 E}{(K/r)^2}$
σ_{a1} = allowable average compression stress under concentric loading, ksi
E = modulus of elasticity, typically, 29,500 ksi
K = effective length factor
L = unbraced length of member, in.
r = radius of gyration of full, unreduced cross section, in.
σ_y = yield strength of steel, ksi
Q = area reduction factor determined as: Ae/A — where Ae is the effective cross-sectional area computed per AA-D-3200 and A is the full or unreduced area of the cross section.

AA-D-3320 BASIC DESIGN STRESS

Stresses on the net section of tension members, and tension and compression on the extreme fiber of flexural members including membrane stresses shall not exceed the value σ_c specified below:

$$\sigma_c = 0.60\ \sigma_y \quad (34)$$

where

σ_y = the specified minimum yield strength, ksi

AA-D-3330 LOCAL PLATE BENDING

The allowable stress, σ, for local plate bending calculated on an elastic basis, plus membrane (tension), shall not exceed the following value:

$$\sigma = 0.90\ \sigma_y \quad (35)$$

AA-D-3340 SHEAR STRESSES IN WEBS

The maximum average shear stress in kips per square inch on the gross area of a flat web shall not exceed:

$$\sigma_v = \frac{65.7\sqrt{K_v\sigma_y}}{(h/t)} \le 0.40\ \sigma_y \quad (36)$$

for $h/t \le 237\ \sqrt{K_v\sigma_y}$

$$\sigma_v = \frac{15{,}600\ \sqrt{K_v\sigma_y}}{(h/t)^2} \quad (37)$$

for $237\ \sqrt{K_v\sigma_y} < h/t \le 200$

where

σ_v = allowable shear stress, ksi
σ_y = yield strength, ksi
t = base steel thickness of the web element, in.
h = clear distance between flanges measured along the plane of web, in.
K_v = shear buckling coefficient which for unreinforced webs equals 5.34. Values of K_v for other than unreinforced webs may be extracted from the AISI specification.

For h/t ratios exceeding 200, use of eq. (37) will result in very small values for allowable shear stress. Options discussed in AA-D-3200 may be used to increase the allowable shear stress.

AA-D-3350 COMBINED AXIAL AND BENDING STRESSES

When subject to both axial compression and bending, members shall be proportioned to meet the following requirements [see Article AA-D-5000 (*Specifications for the Design of Cold-Formed Steel Structural Members*)].

for $f_a/\sigma_{a1} \le 0.15$

$$\frac{f_a}{\sigma_{a1}} + \frac{f_p}{\sigma_c} + \frac{f_{bx}}{\sigma_c} + \frac{f_{by}}{\sigma_c} \le 1.0 \quad (38)$$

for $f_a/\sigma_{a1} > 0.15$

$$\frac{f_a}{\sigma_{a1}} + \frac{f_p}{\sigma_c} + \frac{C_{mx}f_{bx}}{\left(1 - \dfrac{f_a}{F_{ex}^{1}}\right)^{\sigma c}} + \frac{C_{my}f_{by}}{\left(1 - \dfrac{f_a}{F_{ey}^{1}}\right)^{\sigma c}} \le 1.0 \quad (39)$$

Copyright ASME International
Provided by IHS under license with ASME
No reproduction or networking permitted without license from IHS
Not for Resale

The subscripts x and y in the preceding equations indicate the axis of bending about which a particular stress or design property applies;
where

f_a = the applied compressive stress, ksi
f_p = the applied membrane stress due to pressure, ksi
$f_{bx,y}$ = the applied bending stress, ksi

Values for $C_{mx,y}$ may be obtained from the AISI specification.

$$F_{ex}^{1} = \frac{12\ \pi^2 E}{23\ (KL/r_x)^2} \tag{40a}$$

$$F_{ey}^{1} = \frac{12\ \pi^2 E}{23(KL/r_y)^2} \tag{40b}$$

AA-D-3360 STRESSES AT DUCT OPENINGS

Stress intensification and local stresses due to the presence of openings at duct walls for equipment installation, shall be evaluated to permit proper design of ductwork. Local reinforcing of the duct plate in the vicinity of the opening may be required.

AA-D-3370 COMBINED BENDING AND SHEAR STRESSES IN WEBS

For unreinforced beam webs subjected to both bending and shear stresses, members shall be proportioned to meet the following requirements [see Article AA-D-5000 (La Boube and Yu 1978)]:

$$\left(\frac{f_{bw}}{\sigma_c}\right)^2 + \left(\frac{f_v}{\sigma_v}\right)^2 \le 1.0 \tag{41a}$$

For beam webs with transverse stiffeners satisfying the requirements of the AISI specification, members shall be proportioned to meet the following requirement:

$$0.6\left(\frac{f_{bw}}{\sigma_c}\right) + \frac{f_v}{\sigma_v} \le 1.3 \tag{41b}$$

when $f_{bw}/\sigma_c > 0.5$ and $f_v/\sigma_v > 0.7$
where

σ_c, σ_v = (defined previously)
f_{bw} = applied web bending stress, ksi
f_v = applied web shear stress, ksi

AA-D-3400 ALLOWABLE DESIGN STRESSES — SERVICE LEVEL B, C, OR D

Members and assemblies subject to stresses produced by Service Level B, C, or D load combinations shown in Table SA-4212, may be proportioned for unit stresses 1.3 (Service Level B) or 1.6 (Service Levels C or D) times those specified in AA-D-3310 through AA-D-3340 for Service Level A load combinations. However, the increased stress allowables shall not exceed the following limits.

Axially loaded compression members:

$$\sigma_{a1}\ (\text{max.}) = 0.90\sigma_y \tag{42a}$$

Basic design stress:

$$\sigma_c\ (\text{max.}) = 0.9\sigma_y \tag{42b}$$

Local plate bending:

$$\sigma\ (\text{max.}) = 1.35\ \sigma_y \tag{42c}$$

Members subjected to shear:

$$\sigma\ (\text{max.}) = 0.90\sigma/\sqrt{3} \tag{42d}$$

AA-D-3500 STIFFENERS

AA-D-3510 STIFFENER DESIGN

Duct stiffeners are generally equal leg-angle shapes welded to the duct. Duct stiffeners shall be designed for loads resulting from duct internal pressure and duct plate local seismic excitation based on the tributary areas (Fig. AA-D-3510), as well as stiffener self-weight excitation and loads from equipment mounted directly on the duct plate. Other loads as specified in AA-4211, if present, shall also be considered (e.g., fluid momentum loads).

Copyright ASME International
Provided by IHS under license with ASME
No reproduction or networking permitted without license from IHS
Not for Resale

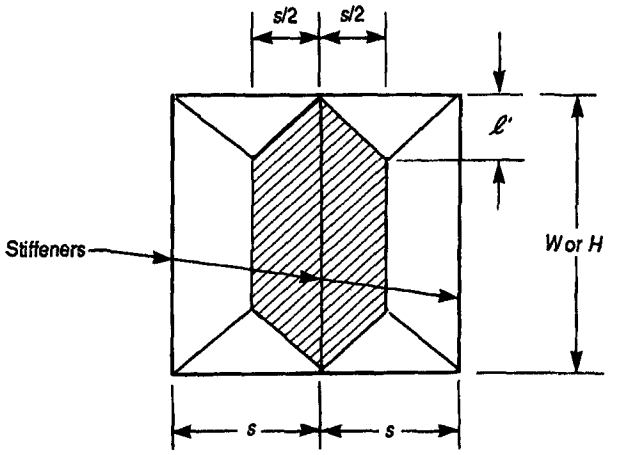

FIG. AA-D-3510

In Fig. AA-D-3510, the cross-hatched area represents the duct plate area tributary to the stiffener for load determination.

where

s = stiffener spacing
W or H = width or height of the duct respectively
ℓ' = $s/2$

In lieu of the trapezoidal tributary area, a rectangular tributary area may be conservatively used for simplification.

The capacity of duct stiffeners shall be determined in accordance with conventional methods of structural design.

AA-D-3520 STIFFENER SIZE AND SPACING

Duct stiffener size and spacing is contingent upon many parameters including duct plate thickness, duct pressure levels, seismic excitation levels and other loads as discussed in AA-D-3510.

It is recommended that as a starting point, the stiffener size and spacings given by SMACNA, which are primarily based on operational requirements, be used. Then, based on detailed duct analysis, if a closer stiffener spacing is required for a particular duct size, that spacing shall be used.

Copyright ASME International
Provided by IHS under license with ASME
No reproduction or networking permitted without license from IHS
Not for Resale

ARTICLE AA-D-4000
DUCTWORK DESIGN

The ductwork should be laid out with the stiffener spacing as required for the particular application. All of the loads should be identified, and the equations presented in AA-D-3300 and AA-D-3400 checked to see which type of load will be the governing load. This load and its defining equation will then define the spacing between supports.

The allowable span (spacing between hangers) can be found by solving the appropriate equation for the span L required to produce a given stress level.

The loads required for this calculation are dependent on whether the span being computed is due to deadweight loading or dynamic loading. For deadweight spans, the 250 lb midspan load over a 10 in.^{2} area must be applied in addition to the distributed load due to duct, stiffener, and other weights. During a dynamic event, the 250 lb load does not apply, and the solution for the span depends only on the distributed weight of the system. For a bending stress dominated system, the solution for allowable span for a *circular* duct is:

$$\sigma_{CR} = \frac{0.33\ Et}{D} \tag{43}$$

The deadweight span can be found by solving for L in the following equation:

$$\sigma = \frac{Mc}{I} = \frac{WL^2C}{8I} + \frac{PLc}{4I} = \frac{0.33Et}{D} \tag{44}$$

Similarly, the dynamic span can be found by solving for L in the following equation:

$$\sigma = \frac{Mc}{I} = \frac{WL^2C}{8I} = \frac{0.33Et}{D} \tag{45}$$

For critical buckling, the deadweight span can be found by solving for L in this equation:

$$\sigma = \frac{Mc}{I} = \frac{WL^2c}{8I} + \frac{PLc}{4I} = \sigma_y \tag{46}$$

The dynamic span can be found in the same way:

$$\sigma = \frac{Mc}{I} = \frac{WL^2c}{8I} = \sigma_y \tag{47}$$

where

σ_y, E, t, D, C, and I are defined in Articles AA-D-2000 and AA-D-3000

L = allowable span, in.

P = 0.250 kip load

W = distributed weight of duct including stiffeners and insulation, K/in.

σ = bending stress, ksi

M = bending moment, K·in.

The bending stress should be checked against the appropriate allowables. In the event the allowable stress for bending is below that necessary to cause buckling, then the allowable span for design purposes will be based on bending stress, not buckling. The ASME stress intensification factors traditionally used in piping analysis are not mandatory for use in ductwork analysis. The ASME piping factors are derived based on fatigue consideration due to high temperature service, and as such are not applicable to ductwork.

For ductwork analysis, the stress intensification factors k, listed below, should be used as a minimum [see Article AA-D-5000 (Sobieszanski 1970, Harp and Roberts 1971, Jones and Kitching 1966, and Seely and Smith 1962)].

k = 2.5 for duct elbows

k = 3.5 for duct tees

k = 1.0 for duct straight runs

Then, the stress at a point due to a bending moment becomes:

$$\sigma = k\frac{Mc}{I} \tag{48}$$

Copyright ASME International
Provided by IHS under license with ASME
No reproduction or networking permitted without license from IHS
Not for Resale

when M is determined from the various analysis methods for static or dynamic loads, and k is the appropriate duct stress intensification.

If a modal analysis is performed, the analysis using the appropriate response spectra can be expedited if a dynamic span based on the methods in this appendix is used to lay off hanger spans.

If a simplified static method is used, the same method can be used to determine the allowable spans based on the design methods of the appendix. Simplified methods differ from modal analysis in that higher vibratory modes are not examined and the results may not be conservative. Therefore, a multimode participation factor is recommended to adjust the design acceleration upward to account for the presence of higher vibratory modes that the simple method may otherwise not include. A factor K equal to 1.5 is recommended unless another value can be justified [see Article AA-D-5000 (NUREG 0800)]. Thus, for a design acceleration of A, the new design acceleration A^1 is found from:

$$A^1 = KA \tag{49}$$

where

K = multimode participation factor

K = 1.5 (suggested value) [refer to Article AA-D-5000 (NUREG 0800)] the load becomes:

$$W^1 = W(KA) \quad \text{horizontal event} \tag{50}$$

$$W^1 = W(1 \pm KA) \quad \text{vertical event} \tag{51}$$

from beam theory as before:

$$\sigma = \frac{Mc}{I} = \frac{kW^1L^2c}{8I}$$

$$L = \left[\frac{8I\sigma}{kW^1r}\right]^{1/2} \tag{52}$$

for a horizontal event:

$$L = \left[\frac{8I\sigma}{kWKAr}\right]^{1/2} \tag{53}$$

for a vertical event:

$$L = \left[\frac{8I\sigma}{kW(1 \pm KA)r}\right]^{1/2} \tag{54}$$

where

"k" = stress intensification factors

k = 2.5 elbows

k = 3.5 tees

k = 1.0 straight runs

r = radius of duct

σ = allowable stress, ksi

The spans computed above can be used to determine support spacings for a circular duct system. The vertical span should be used throughout. The horizontal span, if computed differently from the vertical span, should be used to check spans against restraints required for vertical restraint. If the vertical supports do not provide horizontal restraint, then additional supports based on the horizontal span may be required.

The seismic deflections σ should also be checked.

From elementary beam theory, the deflection under uniform loading of a simply supported beam is:

$$\sigma = \frac{5W^1L^4}{384EI} \tag{55}$$

Using the definition for W^1 for vertical and horizontal events, the deflections are:

(a) Vertical Event

$$\sigma = \frac{5\ (1 \pm KA)\ WL^4}{384EI} \tag{56}$$

(b) Horizontal Event

$$\sigma = \frac{5\ KAWL^4}{384EI} \tag{57}$$

Copyright ASME International
Provided by IHS under license with ASME
No reproduction or networking permitted without license from IHS
Not for Resale

ARTICLE AA-D-5000
REFERENCED DOCUMENTS

Gerard, G., and Becker, H., *Handbook of Structural Stability, Part III, Buckling of Curved Plates and Shells,* Technical Note No. 3783, National Advisory Commission or Aeronautics, Washington, DC, 1957

Harp, J. K., and Roberts, B., "Experimental Stress Analysis of 24 Inch Tees," *Journal of Engineering for Industry,* Transactions of the ASME, November, 1971

Sobieszanski, J., "Strength of a Pipe Mitred Bend," *Journal of Engineering for Industry,* Transactions of the ASME, November, 1970

Publisher: The American Society of Mechanical Engineers (ASME International), Three Park Avenue, New York, NY 10016-5990; Order Department: 22 Law Drive, Box 2300, Fairfield, NJ 02009-2300

Johnston, B. G. (Editor), *Guide to Stability Design Criteria for Metal Structures,* Third Edition, John Wiley and Sons, Inc., New York, NY, 1976

Jones, N., and Kitching, R., *On Experimental Investigation of a Right-Angled Single Unreinforced Mitred-Bend Subjected to Various Bending Moments, Journal of Strain Analysis,* Vol. 1, No. 3, 1966

La Boube, R. A., and Yu, W. W., *Cold-Formed Steel Web Elements Under Combined Bending and Shear,* 4th International Conference on Cold-Formed Steel Structures, St. Louis, MO, 1978

Lunquist, E. E., *Strength Tests of Thin-Walled Duralium Cylinders in Combined Transverse Shear and Bending,* Technical Note 523, National Advisory Committee for Aeronautics, Washington, DC, 1935

Roark, R. J., and Young, W. C., *Formulas for Stress and Strain,* Fifth Edition, McGraw-Hill Book Company, Inc., New York, NY, 1975

Schilling, C. G., "Buckling Strength of Circular Tubes," *Journal of the Structural Division,* ASCE Proceedings, Vol. 91, NO ST5, October, 1965

Publisher: American Society of Civil Engineers (ASCE), 1801 Alexander Bell Drive, Reston, VA 20191-4400

Seely, F. B., and Smith, J. O., *Advanced Mechanics of Materials,* Second Edition, John Wiley and Sons, Inc., New York, NY, 1962

Specification for the Design of Cold-Formed Steel Structural Members (latest edition)

Publisher: American Iron and Steel Institute (AISI), 2000 Town Center, Southfield, MI 48075

Timoshenko, S. P., and Woinowsky-Krieger, S., *Theory of Plates and Shells,* Second Edition, McGraw-Hill Book Company, New York, NY, 1959

NUREG 0800, Standard Review Plan 3.9.3.

Publisher: U.S. Nuclear Regulatory Commission (NRC), One White Flint North, 11555 Rockville Pike, Rockville, MD 20852

Yu, W. W. *Cold-Formed Steel Design,* John Wiley and Sons, Inc., New York, NY, 1985

Copyright ASME International
Provided by IHS under license with ASME
No reproduction or networking permitted without license from IHS
Not for Resale

Copyright ASME International
Provided by IHS under license with ASME
No reproduction or networking permitted without license from IHS
Not for Resale

Division II
Ventilation Air Cleaning and Ventilation Air Conditioning

--`,,```,,,,````-`-`,,`,,`,`,,`---

Copyright ASME International
Provided by IHS under license with ASME
No reproduction or networking permitted without license from IHS

Not for Resale

SECTION BA
FANS AND BLOWERS

BA-1000	**Introduction**	88
BA-1100	Scope	88
BA-2000	**Referenced Documents**	90
BA-3000	**Materials**	91
BA-3100	General	91
BA-3200	Special Limitations on Materials	91
BA-3300	Designation of Materials	91
BA-3400	Certification of Materials	91
BA-3500	Purchased Materials	91
BA-3600	Driver Materials	92
BA-4000	**Design**	94
BA-4100	Design Conditions	94
BA-4200	Selection	96
BA-4300	Construction	97
BA-4400	Reports and Calculations	99
BA-5000	**Inspection and Testing**	101
BA-5100	Fan Inspection and Testing	101
BA-5200	Driver Inspection and Testing	102
BA-6000	**Fabrication and Installation of Centrifugal and Axial Fans**	103
BA-6100	Fabrication	103
BA-7000	**Packaging, Shipping, and Storage**	104
BA-7100	Fans	104
BA-7200	Drivers Shipped Separately	104
BA-8000	**Quality Assurance**	105
BA-8100	Required Documentation for Fans	105
BA-8200	Quality Assurance for Drivers	105

Copyright ASME International
Provided by IHS under license with ASME
No reproduction or networking permitted without license from IHS
Not for Resale

BA-9000 **Nameplates and Operating and Maintenance Manuals** 106
BA-9100 Fans 106
BA-9200 Accessories 106
BA-9300 Operating and Maintenance Manuals 106

Tables

BA-3100 Allowable Materials 92
BA-4162 Maximum Allowable Displacement 96

Nonmandatory Appendices

BA-A Fan System Considerations 107
BA-B Division of Responsibility 109

Copyright ASME International
Provided by IHS under license with ASME
No reproduction or networking permitted without license from IHS
Not for Resale

ARTICLE BA-1000
INTRODUCTION

BA-1100 SCOPE

This section provides minimum requirements for the performance, design, construction, acceptance testing, and quality assurance for fans, fan drivers, drives, and related fan accessories used as components in nuclear safety-related air or gas treatment systems in nuclear facilities.

BA-1110 PURPOSE

The purpose of this section is to assure that fan equipment used in nuclear facilities is acceptable in all aspects of performance, design, and construction.

BA-1120 APPLICABILITY

This section applies only to fans acting as individual components in a system and includes the driver, drive, and related fan accessories. This section does not cover equipment whose primary purpose is to compress air or gas. Although fans used in nuclear facilities may produce a change in density of air or gas being moved, hence providing compression or rarefaction, the primary purpose of the fans is to move air or gas. No limits on speed, compression, density, temperature, power, or size restrict the applicability of this section.

This section does not cover any functional system design requirements, sizing of complete air handling systems, or any operating characteristics of these systems. Additionally, ejectors, gas compressors, gravity roof ventilators, and positive displacement-type air moving units are not within the scope of this Code.

The responsibility for meeting each requirement of this section shall be assigned by the Owner or designee using Nonmandatory Appendix BA-B as a guide.

BA-1130 DEFINITIONS AND TERMS

axial fans: comprised of three groups of fans: propeller, tubeaxial, and vaneaxial. In all cases, the air flow is parallel to the rotating shaft. Definitions and operating characteristics are given in the ASHRAE Equipment Handbook.

blocked tight/shut off: a condition of fan operating accompanied by a complete closure of the inlet or outlet, permitting no air flow.

brake horsepower: the power delivered to the fan input shaft (does not include any drive losses other than the fan bearings).

centrifugal fan: a fan rotor or wheel with blades within a scroll-type housing that includes driving mechanism supports for either belt drive or direct connection. Air enters the housing through one or two inlets concentric with the rotating shaft. Air is expelled through the wheel blades into the surrounding housing and the fan outlet.

critical speed: corresponds to the first natural frequency of the rotating element (impeller and shaft assembly) when mounted on rigid supports.

design pressure: the maximum allowable pressure for which a specific component is designed.

design temperature: the maximum air temperature at which a fan can be continually operated.

direct connected: a method of connection whereby the driver and fan wheel are positively connected in line to operate at the speed of the driver.

dynamic losses: losses in the total pressure that result from disturbances in the air flow caused by change in direction or velocity of the air stream, or both, such as an unducted fan inlet or outlet.

fans: air moving devices comprising a wheel or blade and housing or orifice plate. Fans transfer mechanical

Copyright ASME International
Provided by IHS under license with ASME
No reproduction or networking permitted without license from IHS
Not for Resale

energy and cause the flow of air by increasing the total pressure of the moving air.

fan air density: the density of the air corresponding to the pressure and temperature at the fan inlet.

fan arrangement number: an Air Movement and Control Association definition of bearing location, means of motor support, position of motor, and method of coupling the motor to the fan. Arrangements are shown in AMCA 99-2404 and 99-2410.

fan flow rate: the volumetric rate at fan air density.

fan operating range: the stable portion of the performance curve where the fan will operate free of a stall or surge condition.

fan performance curves: curves that give static or total pressure and power input over a range of air volume flow rate at a stated inlet density and fan speed. Fan performance curves may include static and mechanical efficiency. The range of air volume flow rate usually extends from shutoff (zero air flow) to free delivery (zero static pressure).

fan power input: the power required to drive the fan and any elements in the drive train that are considered a part of the fan.

fan static pressure (P_s): the difference between the fan total pressure and the fan velocity pressure (corresponding to average velocity through outlet). Therefore, the fan static pressure is the difference between the static pressure at the fan outlet and the total pressure at the fan inlet.

fan total pressure (P_t): the difference between the total pressure at the fan outlet and the total pressure at the fan inlet.

free delivery condition: a condition during which the fan static pressure is zero and flow rate is at a maximum value.

inlet bell (bell mouth): fan or duct inlet opening made in the shape of a bell opening to smooth the inlet air flow, minimize air turbulence, and thereby reduce the inlet loss in air pressure.

inlet/outlet cones: conical duct sections added to the inlet or outlet of axial fans. The inlet cone minimizes air turbulence. The outlet cone provides regain in static pressure.

inlet transitions (boxes): sections of ducting added to centrifugal fans in place of standard duct elbows, designed to provide predictable fan inlet conditions. Inlet box positions are shown in AMCA 99-2405.

operating point: a point on the fan performance curve that represents the fan performance for a given system.

operating pressure: the pressure under normal conditions.

operating temperature: the air temperature in the fan during normal conditions.

orientation: the designation of rotation and discharge of a centrifugal fan. Direction of rotation is determined from the drive side for all fans. Rotation is defined as clockwise or counterclockwise. Discharge is defined as up blast, down blast, top horizontal, bottom horizontal, top angular up or down, and bottom angular up or down. Orientations are given in AMCA 99-2406.

peak design temperature: the maximum temperature at which a fan can operate for a specific time.

scroll casing, housing, volute: stationary protective enclosures designed to divert the flow of air into the inlet of the impeller and to direct the flow from the discharge of the impeller. The enclosure may also affect the energy transformation of the airstream.

stall/surge limit: the stall limit of an axial fan is that point near the peak of the pressure curve at a particular blade angle which corresponds to the minimum flow rate at which the fan may be operated without separation of airflow over the blades. The surge limit of a centrifugal fan is that point near the peak of the pressure curve which corresponds to the minimum flow rate at which the fan can be operated without instability.

system resistance curve: the plot of the total of all system pressure losses, such as filters, coils, dampers, and ductwork versus air flow.

variable inlet vanes: moveable vanes located in a fan inlet that form an integral part of the fan (whether added to or incorporated as part of an inlet bell) to control fan performance.

Copyright ASME International
Provided by IHS under license with ASME
No reproduction or networking permitted without license from IHS
Not for Resale

ARTICLE BA-2000
REFERENCED DOCUMENTS

The codes and standards listed below shall supplement those listed in Section AA.

AMCA 99-401-1966, Classifications for Spark Resistant Construction

AMCA 99-2404-1972, Drive Arrangements for Centrifugal Fans

AMCA 99-2405-1983, Inlet Box Positions for Centrifugal Fans

AMCA 99-2406-1966, Designations for Rotation and Discharge of Centrifugal Fans

AMCA 99-2408-1967, Operating Limits for Centrifugal Fans

AMCA 99-2410-1966, Drive Arrangements for Tubular Centrifugal Fans

AMCA 201-1973, Fan Application Manual—Fans and Systems

AMCA 210-1974, Laboratory Methods of Testing Fans for Rating Purposes

AMCA 300-1967, Test Code for Sound Rating Air Moving Devices

AMCA 301-1976, Methods for Calculating Fan Sound Ratings From Laboratory Test Data

Publisher: Air Movement and Control Association International, Inc. (AMCA), 30 West University Drive, Arlington Heights, IL 60004-1893

ASHRAE 68-78, Method of Testing In-Duct Sound Power Measurement Procedure for Fans

Publisher: American Society of Heating, Refrigerating, and Air Conditioning Engineers, Inc. (ASHRAE), 1791 Tullie Circle, NE, Atlanta, GA 30329

Copyright ASME International
Provided by IHS under license with ASME
No reproduction or networking permitted without license from IHS
Not for Resale

ARTICLE BA-3000
MATERIALS

BA-3100 GENERAL

Fan materials, components, and accessories shall be capable of meeting all requirements of BA-4133. As a minimum, materials shall be in conformance with the ASME or ASTM materials listed in Table BA-3100. Substitute materials shall be equivalent to or exceed the requirements in Table BA-3100.

BA-3110 MATERIAL STRESS VALUES

The ASME or ASTM numbers in Table BA-3100 designate a chemical composition and a material thickness limit. A grade designation is usually required to determine the minimum strength of the material. If the specific grade material has an assigned minimum yield and tensile strength, these values shall be used for design purposes. If values have not been established and assigned, then tests in accordance with the procedures outlined in ASTM A 370 and Article AA-5000 shall be performed to obtain these values. Results of mill certified tests performed as above designating these values may be used. Maximum allowable design stress values shall be calculated by the procedures in Article AA-4000. These procedures require the use of an allowable stress for normal structural requirements, and correction of allowable stress for conditions where buckling can take place and for the several service levels. When the minimum yield values have been established by test or by ASTM minimums, then the allowable stress S or S_a used in Article AA-4000 shall be 60% of yield.

BA-3200 SPECIAL LIMITATIONS ON MATERIALS

Aluminum and zinc shall not be used in the presence of corrosive vapors. All materials shall be compatible with operating environmental conditions.

BA-3300 DESIGNATION OF MATERIALS

The ASME or ASTM material numbers and grade for the fan components selected from BA-3410 and BA-3420 shall be identified.

BA-3400 CERTIFICATION OF MATERIALS

The Manufacturer shall make available, as a minimum, certified test reports of chemical and physical properties of material and hardware used for all stress components of fans and related accessories, including fan wheel components, fan shafts, and driver support plate, but excluding fan drivers, drives, and bearings. Fan components, listed in BA-3410 and BA-3420, shall be provided with a Manufacturer's Certificate of Compliance covering the ASME or ASTM material specification, grade, and class.

BA-3410 CENTRIFUGAL FANS

A Manufacturer's Certificate of Compliance shall be provided for scrolls, housing side sheets, inlets, side plates, back (center) plate, weld filler materials, and support framing integral to the fan.

BA-3420 AXIAL FANS

A Manufacturer's Certificate of Compliance shall be provided for fan casing, guide vanes, weld filler material, and driver support components.

BA-3500 PURCHASED MATERIALS

All purchased items shall meet the requirements of BA-3100, BA-3200, BA-3300, and BA-3400.

Copyright ASME International
Provided by IHS under license with ASME
No reproduction or networking permitted without license from IHS
Not for Resale

BA-3600 DRIVER MATERIALS

Driver materials shall be selected such that the drivers meet the electrical and mechanical requirements of ANSI/IEEE 323, ANSI/IEEE 334, ANSI/IEEE 344, and NEMA MG-1, as required by the design specification.

TABLE BA-3100
ALLOWABLE MATERIALS

ASME Designator	ASTM Designator	Publication Title
Sheet and Strip		
...	A 366-72	Steel, Carbon, Cold-Rolled Sheet, Commercial Quality
SA-414	A 414-79	Carbon Steel Sheets for Pressure Vessels
...	A 526-71	Steel Sheet, Zinc Coated by the Hot-Dip Process, Commercial Quality
...	A 527-71	Steel Sheet, Zinc Coated by the Hot-Dip Process, Lock-Form Quality
...	A 569-76	Steel, Carbon, Hot-Rolled Sheet and Strip, Commercial Quality
...	A 570-79	Hot-Rolled Carbon Steel Sheet and Strip, Structural Quality
...	A 606-65	Steel Sheet and Strip, Hot- and Cold-Rolled, High Strength, Low-Alloy With Improved Corrosion Resistance
...	A 607-75	Steel Sheet and Strip, Hot- and Cold-Rolled, High Strength, Low-Alloy Columbium and/or Vanadium
...	A 611-72	Steel, Cold-Rolled Sheet, Carbon Structural
SA-620	A 620-70	Carbon Steel Sheet, Cold-Rolled, Drawing Quality, Special Killed
...	A 621-75	Steel Sheet, Hot-Rolled, Pickled and Oiled, Drawing Quality
...	A 743-79	Corrosion Resistant Chromium–Iron–Nickel Base Alloy for General Purpose
...	A 744-79	Corrosion Resistant Iron–Chromium–Nickel and Nickel Base Alloy Casting for Severe Service
Plate		
SA-240	A 240-79	Heat-Resisting Chromium and Chromium–Nickel Stainless Steel Plate, Sheet, and Strip for Fusion-Welded Unfired Pressure Vessels
...	A 242-79	High-Strength Low-Alloy Type 1
SA-283	A 283-79	Low- and Intermediate-Tensile Strength Carbon Steel Plates, Shapes, and Bars, Structural Quality
SA-285	A 284-77	Pressure Vessel Plates, Carbon Steel of Low, High and Intermediate Tensile Strength
...	A 514-77	High-Strength Quenched and Tempered Alloy Steel
...	A 588-79	High-Strength Low-Alloy With 50,000 Min. Yield to 4 In. Thick
SA-209	B 209-80	Aluminum Sheet or Plate, Alloys 3003, 5052, 6061, 6061-T6
Hardware		
SA-193	A 193-79	Alloy-Steel and Stainless Steel Bolting Materials for High-Temperature Service
SA-194	A 194-79	Carbon and Alloy-Steel Nuts for Bolts for High-Pressure and High-Temperature Service
SA-307	A 307-78	Carbon Steel Externally and Internally Threaded Fasteners
SA-354	A 449-78	Quenched and Tempered Steel Bolts and Studs
...	A 489-72	Carbon Steel Eyebolts
SA-563	A 563-78	Carbon Steel Nuts
SA-574	A 574-77	Alloy-Steel Socket Head Cap Screws

Copyright ASME International
Provided by IHS under license with ASME
No reproduction or networking permitted without license from IHS
Not for Resale

TABLE BA-3100
ALLOWABLE MATERIALS (CONT'D)

ASME Designator	ASTM Designator	Publication Title
Forgings and Castings		
...	A 27-79	Mild to Medium Strength Carbon Steel Castings for General Application
SA-47	A 47-77	Malleable Iron Castings
...	A 48-76	Gray Iron Castings
SA-105	A 105-79	Forgings, Carbon Steel, for Piping Components
...	A 126-73	Gray Iron Castings for Valves, Flanges, and Pipe Fittings
...	A 668-79	Shaft Forging
...	A 536-77	Iron, Nodular Casting
...	A 148-73	Steel, Cast
SB-26	B 26-80	Aluminum, Cast 40E or D 612
SB-108	B 108-80	Aluminum, Cast A 356-T61
Structurals		
SA-36	A 36-77	Structural Steel, Structural Quality
...	A 108-79	Steel Bars, Carbon, Cold-Finished, Standard Quality
...	A 123-78	Angles, Hot-Dip Galvanized Coatings Used on A 36 Base Metal
...	A 276-79	Stainless and Heat-Resisting Steel Bars and Shapes
SA-479	A 479-79	Stainless and Heat Resisting Steel Bars and Shapes, Pressure Vessel Quality
...	A 510-77	Wire Rods and Coarse Round Wire, Carbon Steel
...	A 575-73	Merchant Quality Hot-Rolled Carbon Steel Bars
...	A 576-79	Steel Bars, Carbon, Hot-Rolled, Special Quality
SB-211	B 211-79	Aluminum Bars, Alloy 6061-T6
SB-308	B 308-80	Aluminum Angles, Alloy 6061-T6
Pipe and Tube		
SA-53	A 53-79	Pipe Steel, Black and Hot-Dipped, Zinc-Coated, Welded and Seamless
...	A 120-79	Pipe Steel, Black and Hot-Dipped, Zinc-Coated, Welded and Seamless for Ordinary Service
	A 269-80	Seamless and Welded Austenitic Stainless Steel Tubing for General Service
SA-312	A 312-80	Seamless and Austenitic Stainless Steel Pipe
...	A 519-79	Seamless Carbon and Alloy-Steel Mechanical Tubing
Screening		
...	A 555-76	General Requirements for Stainless and Heat-Resisting Steel Wire
...	A 581-75	Free-Machining Stainless and Heat-Resisting Steel

Copyright ASME International
Provided by IHS under license with ASME
No reproduction or networking permitted without license from IHS
Not for Resale

ARTICLE BA-4000
DESIGN

Design of fans shall be in accordance with the requirements of Section BA and of those portions of Section AA invoked in Section BA. Refer to Nonmandatory Appendix BA-A for fan system considerations.

BA-4100 DESIGN CONDITIONS

BA-4110 PERFORMANCE

Fans shall be selected to provide the specified volume and pressure requirements while operating in the stable region of the fan curve. Fans shall not be selected to operate in the stall or unstable region of the fan curve. Details of fan inlet and discharge conditions shall be considered and documented in support of fan sizing and selection. Fans shall be sized with consideration of dynamic losses that may be encountered. System characteristics shall be considered using AMCA 201. The following fan data shall be established in support of the fan selection:

(a) fan type and blade shape;
(b) airflow, actual ft^3/min (m^3/min);
(c) total pressure to be developed, in. wg (mm wg);
(d) maximum allowable discharge velocity, ft/min (m/min);
(e) air density at which the fan is to be rated, lb/ft^3 (kg/m^3);
(f) maximum air density expected, lb/ft^3 (kg/m^3);
(g) operating temperatures, °F (°C);
(h) details of intake and discharge transitions that affect fan performance;
(i) parallel fan operation, if required;
(j) peak design temperature; and
(k) fan operating range, if required.

BA-4120 ENVIRONMENTAL CONDITIONS

BA-4121 General

Fans, including drivers, drives, bearings, and accessories, shall be designed to operate continuously for a period of at least 30 days, or for a period of time during which access for maintanence cannot be provided, while exposed to the environmental conditions caused by a postulated accident. This applies to fans used during normal plant operation and to fans on standby status intended for operation under accident conditions only. The 30 days of continuous operation is in addition to the projected life of the plant for fans used during normal plant operation and in addition to expected operation, including operation during periodic testing and maintenance for fans on standby status.

BA-4122 Aging

The aging mechanisms listed in BA-4123 shall be applied to the equipment and components. Design qualification shall be specified in accordance with ANSI/IEEE 627. A list of recommended spare parts and their expected life shall be provided for the equipment and components that are not expected to last for the life of the plant under specific environmental conditions.

BA-4123 Environmental Considerations

The following aging mechanisms affecting life expectancy shall be considered as a minimum:

(a) radiation,
(b) temperature variation range,
(c) pressure variation range,
(d) corrosive chemicals and moisture conditions,
(e) erosive particles in air streams, and
(f) duty cycles.

BA-4130 LOADING

BA-4131 Load Definition

Loads applicable to fan design are described in AA-4211 and AA-4212. The specific conditions indicated in BA-4131.1 through BA-4131.4 shall be considered.

Copyright ASME International
Provided by IHS under license with ASME
No reproduction or networking permitted without license from IHS
Not for Resale

BA-4131.1 Normal Loads. Normal loads consist of the following:

(a) positive or negative pressure differential transients imposed on the fan housing by:

(1) sudden closure of air dampers in the fan or system in which the fan is installed, or

(2) maximum normal fan pressure differential;

(b) deadweight of fan, driver, drive, and related fan accessories;

(c) forces imposed on the fan in any of its modes of operation, including a single failure of any interacting component;

(d) loads imposed on fan inlet and outlet by duct connections;

(e) loads imposed on fan, driver, or both, by electrical conduit connections; and

(f) loads imposed on the fan bearings.

BA-4131.2 Loads Due to Constraint of Free End Displacement. Loads due to constraint of free end displacement may be caused by thermal expansion and contraction.

BA-4131.3 Design Pressure Differential Loads. Design pressure differential loads may be caused by hurricane, tornado, and design basis accident or pipe break.

BA-4131.4 Loads Imposed on Driver and Fan When Starting. Loads imposed on the driver and fan may be caused by fan pinwheeling (inadvertent reverse rotation) caused by backflow of air while on standby status.

BA-4132 Missile Protection

Fans shall be designed to prevent any internally generated missiles from penetrating the fan housing unless other external protection is provided. Consideration shall be given to the orientation of the fan inlet and outlet openings with respect to the protection of other safety-related equipment that is to occupy the adjoining space.

BA-4133 Construction

As a minimum, the fan construction shall be capable of meeting the maximum conditions in which fan pressure and outlet velocity are specified.

Fans shall be designed in accordance with the structural requirements given in Article AA-4000. Structural requirements, load definitions, and structural design verification specific to fans are given in BA-4131, BA-4431, BA-4432, and BA-4433. Additionally, construction shall comply with the stress and deflection criteria associated with the loads given by BA-4433.

BA-4140 LEAKAGE

BA-4141 General

Fans shall meet the following leakage criteria (leak tightness requirements).

BA-4142 Fan Leakage

Fans are subject to the leakage criteria when the location of the fan and direction of leakage impose a contamination burden in the space housing the fan or the space supplied with air by the fan. Leakage testing shall be as given in BA-5142.

BA-4142.1 Fan Housing Leakage. Housings subject to the leakage criteria, including penetrations such as cable connections of axial fans, shall be made airtight, according to the method outlined in BA-5142.1.

BA-4142.2 Shaft Leakage. Shafts subject to leakage criteria shall be limited to 0.01% of the normal airflow per inch (25.4 mm) of fan operating pressure, or 0.5 scfm (0.0142 m^3/min), whichever is greater.

BA-4150 SUPPORT BOUNDARY

The support boundary for the fan shall be the point of attachment of the fan housing or mount to its foundation.

BA-4151 Centrifugal Fan Support Boundary

The support boundary for a centrifugal fan is the attachment point for the fan housing to the building foundation, or the structural members of an air handling unit, or structural steel within the building. The following data shall be specified:

(a) size and type of anchorage attachment;

(b) anchorage loads to be imposed on the attachment points.

BA-4152 Axial Fan Support Boundary

The support boundary for an axial fan is at the inlet and outlet mounting flanges unless the axial fan is base mounted. The support boundary for a base-mounted axial fan is the attachment point for the fan housing to the building foundation, or the structural members

Copyright ASME International
Provided by IHS under license with ASME
No reproduction or networking permitted without license from IHS
Not for Resale

of an air handling unit, or structural steel within the building. The following data shall be specified:

(a) size and type of anchorage attachment;

(b) anchorage loads to be imposed on the attachment points.

BA-4160 VIBRATION

BA-4161 General

Fan wheels shall be dynamically balanced prior to fan assembly. Final balancing shall be performed on the completed assembly. All test results shall be documented. After installation, fans shall be checked and rebalanced, if necessary, to correct changes due to handling, shipping, and final support structure conditions.

BA-4162 Centrifugal Fans

The double amplitude radial displacement measured on the bearing caps at the designated fan speed shall not exceed the values listed in Table BA-4162, measured with a meter filtered to the fan rotational speed.

BA-4163 Axial Fans

The double amplitude radial displacement measured on the fan housing at both the inlet and discharge locations at the designated speed shall not exceed 1.0 mil (0.025 mm), measured with a meter filtered to the fan rotational speed.

BA-4200 SELECTION

BA-4210 FANS

BA-4211 General

This subarticle details principles to be used in the application of fans to systems in nuclear facilities.

BA-4211.1 Application. Each fan shall have a title and a numbering system that uniquely identifies that fan.

BA-4211.2 Duty. The duty of the fan shall be described by the operating and idle time periods, their frequency, and the corresponding fan load characteristics.

TABLE BA-4162
MAXIMUM ALLOWABLE DISPLACEMENT

Rotational Speed, rpm	Double Amplitude Displacement, mils (mm)	
600	3.2	(0.081)
720	2.7	(0.068)
900	2.1	(0.053)
1200	1.6	(0.040)
1800	1.1	(0.027)
3600	0.5	(0.012)

GENERAL NOTE: Displacement may be interpolated for other speeds.

BA-4211.3 Fan Location. The fan orientation, elevation above sea level, type of foundation, and means of support shall be included in the design specification.

BA-4211.4 Fan Environment. The environmental conditions, including airstream and gas stream contaminants, of BA-4120 that can affect the operability, service life, maintainability, or need for special features as to construction or materials of the fan shall be included in the design specification.

BA-4211.5 Fan Drive Arrangement. The fan drive arrangement shall be included in the design specification.

BA-4211.6 Special Limitations. Special limitations, such as space, weight, outlet velocity, fan speed, sound power level, and driver nameplate horsepower, that influence fan selection shall be considered and included in the design specification.

BA-4212 Performance Rating

Fan performance rating shall consist of the following information for all fan operating points, as a minimum:

(a) flow rate at fan inlet, actual ft^3/min (m^3/min);

(b) fan total and fan static pressure, in. wg (mm wg);

(c) fan air density, lb/ft^3 (kg/m^3);

(d) fan air temperature, °F (°C);

(e) fan operating speed, rpm; and

(f) fan power input, hp (kW).

BA-4213 Pressure Relationships

Fans shall be rated using both fan static pressure and fan total pressure. Fan pressure relationships are illustrated in AMCA 201.

Copyright ASME International
Provided by IHS under license with ASME
No reproduction or networking permitted without license from IHS
Not for Resale

BA-4214 Operation at Reduced Flow

Fans shall be selected to satisfy the maximum performance requirement. Operation at reduced flow shall be evaluated during the initial fan selection to ensure stable fan operation over the entire range of expected fan operation.

BA-4215 Construction Information

The following design and construction information shall be identified in selecting the fan (see BA-4300):

(a) fan arrangement and orientation,
(b) peak design and operating temperatures,
(c) special critical speeds or safe speeds,
(d) type of bearings,
(e) type of drive,
(f) accessories,
(g) leakage considerations, and
(h) seismic required response spectra (RRS)

BA-4216 Bases for Fan Rating Data

Fan performance shall be based on tests of a full-size fan, or on test results of a smaller, geometrically similar fan, in accordance with BA-5111. Performance ratings shall not be based on calculations alone. Geometric similarity requires linear proportionality and angular similarity with no omission or addition of parts. Performance ratings from reduced-size fans shall be obtained by tests complying with the requirements of AMCA 210.

BA-4217 Bases for Sound Data Rating

BA-4217.1 Sound Power Level. Fan sound shall be expressed as sound power level in dB (referenced to 10^{-12} W) for eight octave bands. Data shall be obtained from tests of the actual fan or by calculation from test data from a similar fan. Fan sound power level data shall be provided in accordance with BA-4420.

BA-4217.2 Test Data From Actual Fan. Fan sound power level data shall be provided in accordance with BA-5130.

BA-4217.3 Test Data From Fan Model. A fan model of the same Manufacturer's generic design shall be selected to obtain sound test data per BA-4217.2. Scaling of the test data shall be performed in accordance with AMCA 301.

BA-4220 DRIVERS

BA-4221 Information Required for Driver Selection

Information required for driver selection shall consist of the following, as a minimum:

(a) fan speed torque curve with operating brake horsepower point identified;
(b) fan inertia applied to the driver shaft;
(c) external forces acting on the driver shaft;
(d) driver rated electrical power source;
(e) environmental requirements;
(f) driver and fan physical orientation;
(g) applicable standards such as IEEE and NEMA requirements;
(h) space heater requirements; and
(i) minimum air velocity over driver when required.

BA-4222 Special Limitations

BA-4222.1 Centrifugal Fans. Belt drives shall be permitted only in areas that are accessible for maintenance during normal or accident conditions. The number of belts selected shall allow for a single belt failure without loss of function. In use of either direct or belt drives, the equipment shall be capable of operating under the specified conditions while performing its intended safety-related function. Drives in which gear reducers are used shall not be allowed. Systems that are air balanced using variable pitch diameter sheaves shall be provided with fixed diameter sheaves for long-term operation.

BA-4222.2 Axial Fans. Axial fans shall be selected for direct connected operation, similar to AMCA 99-2410 for tubular centrifugal fans, designated arrangement No. 4.

BA-4300 CONSTRUCTION

BA-4310 FANS

BA-4311 Centrifugal Fans

BA-4311.1 General. The housing materials and design shall meet the requirements of BA-4100 and BA-4200.

Spark-resistant construction, where specified, shall meet the requirements of AMCA 99-401.

BA-4311.2 Bearings. Bearings shall be self-aligning, antifriction, and shall have an L-10 service rating life of at least 100,000 hr in accordance with the load and

Copyright ASME International
Provided by IHS under license with ASME
No reproduction or networking permitted without license from IHS
Not for Resale

speed conditions. Bearing rating life shall be established in accordance with ANSI/AFBMA 9 or 11.

When the driver bearings are also the fan bearings, an L-10 life less than 100,000 hr is permissible. This limitation shall be documented.

Bearings shall be provided with grease fittings, usable in accessible areas without interrupting fan operation.

BA-4312 Axial Fans

BA-4312.1 General. The fan construction shall include adjustable-pitch bladed wheels mounted upon the driver's extended shaft and located inside the flanged fan casing. The driver shall meet the requirements of BA-4220 and BA-4320.

When required by BA-4142, electric cables penetrating the fan housing shall meet the requirements of BA-4142.1 as to fan housing air leakage.

BA-4312.2 Fan Housing. The fan housing materials and design shall meet the requirements of BA-4100 and BA-4200.

BA-4312.3 Blade Angle. Adjustable pitch blades shall have corresponding blade angles indicated on the fan performance curve. Blade position designations appearing on the fan curve shall bear a correspondence with a permanent index located at the blade hub connection. After setting the blades, the locking device shall be torqued and secured in place.

BA-4312.4 Bearings. Bearings shall be antifriction type. Bearing L-10 life under actual operating conditions shall be at least 100,000 hr. Bearing life shall be established in accordance with ANSI/AFBMA 9 or 11. When the bearing size is limited by driver dimensional constraints and the driver bearings are also the fan bearings, an L-10 life of less than 100,000 hr is permissible. This limitation shall be documented.

Bearings shall be provided with grease fittings. For drivers within the fan casing, both supply and purge lines shall be extended to outside the fan casing to permit bearing lubrication without interrupting fan operation.

BA-4320 DRIVERS AND DRIVES

BA-4321 Types of Drives

The drives shall be subject to the limitation of BA-4222.

BA-4322 Drive Alignment and Adjustment

Direct drives shall make use of metal shims to provide final alignments. Belt drives shall be provided with an adjustable driver base to allow a full range of belt tension adjustment.

BA-4323 Mechanical Design Requirements for Drivers

(a) Bearings shall be antifriction type. Bearing L-10 life under actual operating conditions shall be at least 100,000 hr. An L-10 life of less than 100,000 hr may be used when limited by driver constraints. Bearing life expectancy shall be documented.

Bearings shall be provided with grease fittings. For drivers located within fan casing, both supply and purge grease lines shall be extended to outside the fan casing to permit bearing lubrication without interrupting fan operation.

(b) Maximum sheave arrangement shall be limited per NEMA MG-1.

(c) Drivers shall conform to NEMA MG-1.

BA-4324 Electrical Design Requirements

(a) All drivers shall be designed for single voltage supply.

(b) Drivers shall conform to NEMA MG-1.

(c) Provision shall be made for solid grounding of the driver.

BA-4325 Application

All fan drivers shall be designed to operate at maximum load brake horsepower without encroaching on the driver service factor. Drivers shall be selected to come to speed under reduced voltage conditions peculiar to the specific accident requirement, as detailed in the design specification.

BA-4330 ACCESSORIES

BA-4331 Accessories Common to Centrifugal and Axial Fans

(a) Fan lifting lugs or eye bolts shall be provided on fans and drivers 50 lb (22.7 kg) and heavier in weight.

(b) Inspection panels shall be provided in fan housings having wheels 12 in. (30.5 cm) and larger in diameter. Panels shall be of a size that will allow maintenance on components located within the fan

Copyright ASME International
Provided by IHS under license with ASME
No reproduction or networking permitted without license from IHS
Not for Resale

housing. Quick-opening latches shall normally be used, except that when leakage criteria are required per BA-4142, bolted and gasketed seals shall be used. Latches shall be retainable on the panel or fan to prevent loss of latches in the fan housing.

(c) Arrows clearly indicating the direction of fan rotation and airflow shall be permanently displayed on each fan housing.

(d) All gaskets used shall be of a material that is capable of withstanding the normal and accident aging mechanisms of BA-4123 without loss of function for a minimum predetermined qualified life, and capable of withstanding the environmental conditions of BA-4121.

(e) Bearing lubricants shall be selected to withstand the aging mechanisms of BA-4123 for a minimum predetermined qualified life consistent with the term provided by provisions of accessibility and the environmental conditions of BA-4121.

(f) Provisions shall be made for the installation of thermocouples on fan and driver bearings of fans that are inaccessible for unscheduled inspection.

BA-4332 Centrifugal Fans

BA-4332.1 Variable Inlet Vanes. Variable inlet vanes, when used, shall be capable of reducing the rated volume flow to at least 30% of design, and shall be flanged and bolted to, or built as an integral part of the fan inlet. Manual actuation shall be with a locking quadrant. Electric, pneumatic, or noncombustible electrohydraulic actuators for remote or automatic operation of variable inlet vanes shall be mounted on the fan housing or shall be provided with a common structural support base. When remote inaccessible actuation is required, the vane actuation position shall be displayed at an accessible location. Fan performance characteristics with inlet vanes shall be determined in accordance with Article BA-5000.

Vane assemblies for double inlet fans shall be connected through a common control shaft for simultaneous operation.

BA-4332.2 Inlet Screen Guards. Guards for bolting to the fan inlet or outlet shall meet the material requirements of BA-3100.

BA-4332.3 Vibration Isolators. Vibration isolators shall not be used and fans shall be mounted rigidly unless provisions are made to withstand the forces generated or amplified during a seismic event.

BA-4332.4 Guards. Shaft and bearing guards and V-belt drive guards shall be of the quick-removal design type. V-belt guards shall permit checking the fan speed without guard removal.

BA-4332.5 Inlet Transitions. The inlet and outlet connections shall be flanged. The housing connected flange shall be drilled to match the fan inlet flange. The other flange shall be drilled using the same bolt spacing.

BA-4332.6 Shaft Seals. Shaft seals, when required, shall meet the leakage criteria of BA-4142.2.

BA-4333 Axial Fans

BA-4333.1 Inlet/Outlet Cones. Flanged inlet/outlet cones shall be fabricated of the same material as the fan housing. The housing connected flange of the cone(s) shall be drilled to match the fan inlet/outlet flange(s). The other cone flanges shall be drilled using a similar symmetrical bolt pattern.

BA-4333.2 Inlet Bells. Flanged inlet bells, drilled to match the fan housing inlet flange, shall meet the requirements of BA-3100. Inlet bells should always be provided for fans with nonducted inlets.

BA-4333.3 Inlet and Outlet Screen Guards. Guards for bolting to the fan inlet or outlet shall meet the material requirements of BA-3100.

BA-4333.4 Mounts. Fan mounts shall be welded to the casing and shall be designed to support the weight of the fan and driver in the specified mounting arrangement and in consideration of all internal and external dynamic forces.

BA-4333.5 Vibration Isolators. Vibration isolators shall not be used and fans shall be mounted rigidly unless provisions are made to withstand a seismic event.

BA-4333.6 Variable Inlet Vanes. Variable inlet vanes shall not be used for axial fans unless provisions are made to prevent overloading the driver.

BA-4400 REPORTS AND CALCULATIONS

BA-4410 PERFORMANCE RATING

BA-4411 Rating Calculations

Calculations and tests used to obtain fan ratings shall include the effects on performance of all shaft and bearing blockages, accessories, and other means of control associated with the fan. Fan power requirements shall include the effects of bearing friction and any

Copyright ASME International
Provided by IHS under license with ASME
No reproduction or networking permitted without license from IHS
Not for Resale

other losses due to the drives that are supplied as an integral part of the fan.

BA-4412 Documentation of Final Rating Data

As a minimum, the rating data and the bases identified in BA-4212 and BA-4216 shall be included.

In addition to the listed or tabulated point of rating, a constant-speed performance curve shall be prepared, which contains complete identification information such as fan size, type, inlet and outlet area, system and fan duty, fan speed, and fan air density. The performance curve shall show fan total pressure, fan static pressure, and fan horsepower versus flow rate from free delivery to shutoff. The operating point of rating as well as the permissible operating range over which stable operation will occur shall be clearly identified. Unstable portions of the performance curve shall be clearly labeled.

BA-4420 EQUIPMENT SOUND PRODUCTION

BA-4421 Sound Level Data Report

When required, a sound level data report shall be prepared. The sound level data in the report shall be expressed as sound power level in dB (referenced to 10^{-12} W) for eight octave bands. The report shall state whether the data were obtained from tests of the actual fan or by calculation from test data of a similar fan (see BA-4217).

BA-4430 STRUCTURAL VERIFICATION CONSIDERATIONS

BA-4431 Verification by Analysis

When verification of design by analysis is selected, the results of the analysis shall be in the form of a design verification report (DVR). The DVR shall comply with AA-4441. Equipment shall be deemed to be designed verified if the stress conditions and deflections identified in BA-4131 and AA-4341.2 are not exceeded under the applicable load combinations.

The DVR shall address, as a minimum, the stress and deflection of the following fan components in both the normal and accident conditions:

(a) housings, including flanges and mounting supports
(b) wheel blades
(c) wheel hub
(d) shaft
(e) bearing supports
(f) driver supports
(g) weld filler material
(h) driver

Maximum shaft deflection shall not exceed 90% of the radial clearance between blade and housing. No deflection shall be allowed to exceed the limits of AA-4341.2.

BA-4432 Verification by Testing

When verification by testing is selected, a design verification test procedure (DVTP) shall be established. The test procedure, as a minimum, shall identify the specific components to be tested and the respective test methods and acceptance values. Upon completion of the tests, a DVR shall be prepared. The DVR shall comply with AA-4442. Equipment shall be deemed to have successfully passed the tests if the equipment meets the acceptance requirements identified in AA-4442 when subjected to the selected load combinations.

BA-4433 Special Considerations

(a) The maximum deflection that may be sustained without loss of equipment function during normal or accident conditions shall be determined by analysis or test. The allowable deflections in any plane for the load combinations of BA-4131 shall not exceed the limits expressed by and measured according to BA-4162 and BA-4163.

(b) Fan supports shall be designed to withstand the loads described in BA-4131. Foundation and supports shall be designed so that the natural frequency of vibration of the overall supporting structure is at least 25% lower or 25% higher than the rotational frequency of the fan or driver.

Copyright ASME International
Provided by IHS under license with ASME
No reproduction or networking permitted without license from IHS
Not for Resale

ARTICLE BA-5000
INSPECTION AND TESTING

Inspection and testing of fans shall be in accordance with the requirements of Section BA and of AA-5100, AA-5200, AA-5400, and AA-6430.

BA-5100 FAN INSPECTION AND TESTING

BA-5110 GENERAL TESTING REQUIREMENTS

BA-5111 Fans Requiring Tests

Performance ratings may be based on test results of a fan that is identical as to type and size, or of a smaller, geometrically similar fan, in accordance with BA-4216. Performance ratings established for a fan may be applied to several identical fans of the same type and size, with the same nominal dimensions, irrespective of fan orientation.

BA-5112 Test Facilities

Equipment shall be tested in a facility that provides for testing in accordance with the requirements of this Code.

BA-5112.1 Facilities. The facility shall have the space, power, and instrumentation to conduct full-scale performance or mechanical operating tests without compromising the data or intent of the test.

BA-5112.2 Instrument Calibration. An updated listing of all test instrumentation and equipment shall be maintained along with a description of methods used to calibrate each instrument, the calibration interval, and the date of the last calibration. Calibration intervals shall be a maximum of 1 year or the Manufacturer's minimum requirement, whichever is less. Calibration of instruments shall be traceable to the National Bureau of Standards.

BA-5112.3 Qualification Records. Records shall be maintained in the test facility to verify that all test facility qualification requirements are met.

BA-5113 Documentation

Documentation shall be required for all performance testing, including a report that details witness test procedures and test setups.

BA-5120 PERFORMANCE ACCEPTANCE TESTS

Performance tests to determine a fan's flow rate, pressure, and power consumption shall be conducted.

BA-5121 Test Codes

All performance tests shall be conducted in accordance with AMCA 210. These tests shall include the effects of the drive, fan, and accessories.

BA-5122 Test Setups

Prior to testing, a test procedure containing details of all test setups and test methods shall be established based on AMCA 210.

BA-5123 Measurements

Test measurements shall be in accordance with AMCA 210 and shall yield results within the limits set by AMCA 210, Appendix D. A fan performance test shall consist of the following measurements.

BA-5123.1 Flow Rate. The fan flow rate shall be determined in accordance with AMCA 210 by either pitot tube traverse or AMCA nozzle method.

BA-5123.2 Pressure. Pressure shall be measured by AMCA 210 pitot tube or by piezometer rings.

BA-5123.3 Power. Measurements shall be made to determine shaft input power to the fan in accordance with AMCA 210. For the purposes of this Code, a

Copyright ASME International
Provided by IHS under license with ASME
No reproduction or networking permitted without license from IHS
Not for Resale

driver with complete test results in accordance with IEEE 112A meets the requirements of a calibrated driver.

BA-5123.4 Fan Speed. The fan speed shall be measured in accordance with AMCA 210.

BA-5123.5 Other. Measurements such as temperature and barometric pressure associated with intermediate calculations shall be made in accordance with AMCA 210.

BA-5130 SOUND TESTS

Sound test data shall be obtained in accordance with either of the following methods.

BA-5131 Semireverberant Room Method

Sound power level ratings shall be taken in accordance with AMCA 300.

BA-5132 Induct Method

Sound power level ratings shall be taken in accordance with ASHRAE 68.

BA-5140 MECHANICAL TESTS

Mechanical tests shall be conducted to verify the basic integrity and function of mechanical parts. These tests include the following.

BA-5141 Overspeed Tests

The impeller of each fan shall be overspeed tested to a minimum of 15% above its maximum operating speed for a 10 min duration without increased vibration. Visual inspection shall serve to further verify that no deformation or cracks have occurred.

BA-5142 Leakage Tests

BA-5142.1 Housing. Housing leakage tests required by BA-4142 shall be conducted on the fan housing, pressurized to a level at least 1.25 times the fan operating pressure, using a soap solution at all welds and joints. The acceptance criteria shall call for the absence of any visible bubble formation.

BA-5142.2 Shaft. Shaft leakage tests required by BA-4142 shall be conducted on the fan with the shaft and seal assembled, the shaft rotating at the normal fan operating speed, the fan openings sealed closed, and the fan subjected to the normal fan operating pressure. The fan wheel shall be removed prior to the shaft leakage test, or provision shall be made to account for the increase in air temperature if the fan wheel is left in place.

BA-5143 Fan Vibration Test

Fans shall be given a vibration test as required by BA-4160. Prior to taking the vibration measurements, the fans shall be operated at the normal operating speed for a run in period of time until the bearings reach a stable equilibrium temperature, at which point the temperature no longer rises. Vibration readings taken on the bearing caps on centrifugal fans, and on the fan housing on axial fans, shall be no greater than those given in BA-4162 and BA-4163, respectively.

BA-5144 Mechanical Running Test

All fans shall be given a mechanical running test for at least 1 hr, after which all parts and accessories shall be inspected to determine any sign of excessive wear or mechanical defect.

BA-5145 Seismic Test

Seismic testing, when required, shall be performed in accordance with AA-4350.

BA-5150 TEST RESULTS AND REPORTS

All test results shall be certified and documented.

BA-5200 DRIVER INSPECTION AND TESTING

BA-5210 FIRST UNIT OF A DESIGN

First units of a design shall be given a complete test per IEEE 112A. For a totally enclosed, air over (TEAO) driver, the full-load heat run shall be taken. Test data shall be documented.

BA-5220 SUCCEEDING UNITS OF A DESIGN

Each subsequent driver shall be given a routine test per IEEE 112A. Test data shall be documented.

Copyright ASME International
Provided by IHS under license with ASME
No reproduction or networking permitted without license from IHS
Not for Resale

ARTICLE BA-6000
FABRICATION AND INSTALLATION OF CENTRIFUGAL AND AXIAL FANS

Fabrication shall be in accordance with the requirements of Section BA and of Article AA-6000.

BA-6100 FABRICATION

Written fabrication procedures shall be established and used during the fan manufacture. All heat treating requirements shall be indicated on drawings or in the fabrication procedures.

BA-6110 SELECTION OF MATERIALS

Materials shall conform to the requirements of Article BA-3000.

The material designations shall be provided on the fabrication drawings.

Copyright ASME International
Provided by IHS under license with ASME
No reproduction or networking permitted without license from IHS
Not for Resale

ARTICLE BA-7000
PACKAGING, SHIPPING, AND STORAGE

Packaging, shipping, and storage of fans shall be in accordance with the requirements of Section BA and of Article AA-7000.

BA-7100 FANS

Fans shall be prepared for shipment in accordance with ANSI/ASME NQA-2, Protection Level C, when shipped direct without the driver, or when shipped with the driver installed to a supplier who will assemble the fan with another piece of equipment. When the fan is to be shipped to the jobsite with the driver installed, preparation shall be in accordance with Protection Level B.

BA-7110 STORAGE

Fans shall be stored in accordance with ANSI/ASME NQA-2. When the fans are packaged to Protection Level C, they shall be stored in accordance with Storage Level 3. When packaging is Protection Level B, the fans, drivers, and accessories shall be stored in accordance with Storage Level 2.

BA-7120 DOCUMENTATION

One copy of the storage procedure shall be attached to the equipment or crate at time of shipment. The storage procedure shall cover both short term and long term (over 6 months) storage maintenance programs.

BA-7200 DRIVERS SHIPPED SEPARATELY

BA-7210 SHORT-TERM

Any driver that is to be used within 6 months of shipment shall be packaged according to good commercial practice, shipped within an enclosed carrier, and stored in a weather-tight ventilated and heated building, equivalent to ANSI/ASME NQA-2, Storage Level 2.

BA-7220 LONG-TERM (OVER 6 MONTHS)

Any driver that is to be stored for a period of 6 months or longer must be packaged per ANSI/ASME NQA-2, Protection Level B. If the driver is equipped with space heaters, the space heaters may be energized in storage, in lieu of providing moisture barrier wrapping and internal desiccant.

Copyright ASME International
Provided by IHS under license with ASME
No reproduction or networking permitted without license from IHS
Not for Resale

ARTICLE BA-8000
QUALITY ASSURANCE

Quality assurance of fans shall be in accordance with the requirements of Section BA and of Article AA-8000.

BA-8100 REQUIRED DOCUMENTATION FOR FANS

BA-8110 CERTIFIED FAN PERFORMANCE CURVES

Documentation shall be established to verify that the certified fan performance curves were generated in accordance with AMCA 210. The certified fan performance data shall include a description of the test setup, instruments used, calibration data, and personnel qualification.

BA-8120 MATERIAL CERTIFICATION

Material test reports are required in accordance with BA-3400.

Permanent documentation shall be established and shall include as a minimum: procurement records, receiving records, manufacturing records, inspection reports, material control records, and Certified Material Test Reports for which certification is required. Permanent documentation shall be maintained for the life of the plant.

BA-8200 QUALITY ASSURANCE FOR DRIVERS

Each driver shall be manufactured under a quality assurance program that conforms to ANSI/ASME NQA-2 as applied to fan drivers. Each driver shall be qualified in accordance with ANSI/IEEE 323 Class 1E qualification standards.

Copyright ASME International
Provided by IHS under license with ASME
No reproduction or networking permitted without license from IHS
Not for Resale

ARTICLE BA-9000
NAMEPLATES AND OPERATING AND MAINTENANCE MANUALS

BA-9100 FANS

BA-9110 REQUIRED NAMEPLATE DATA

Each fan assembly shall be provided with a legibly marked nameplate giving the identifying name, normal fan capacity, manufacturer, fan type, size, rotation, rating, maximum speed, and mark numbers, as applicable to Section BA and Article AA-9000.

BA-9120 DRIVERS

Each driver shall have one or more engraved or embossed nameplates of stainless steel, which as a minimum shall convey the data required by NEMA MG-1.

BA-9200 ACCESSORIES

BA-9210 ACCEPTABLE MARKING METHODS

Each accessory shall be marked with the name of the Manufacturer or a distinctive marking, which may be in code, by which it is identified as the product of a particular manufacturer.

BA-9300 OPERATING AND MAINTENANCE MANUALS

The Manufacturer shall provide an operating and maintenance manual for the equipment furnished. The manual shall include:

(a) recommended spare parts list, including a description of each part and a drawing that identifies the location of each part; and

(b) recommended maintenance procedure, including a periodic servicing schedule.

Copyright ASME International
Provided by IHS under license with ASME
No reproduction or networking permitted without license from IHS
Not for Resale

NONMANDATORY APPENDIX BA-A
FAN SYSTEM CONSIDERATIONS

(Refer to BA-4110)

ARTICLE BA-A-1000
FAN SYSTEM CONSIDERATIONS

BA-A-1100 SYSTEM CHARACTERISTICS

System resistance is an expression that establishes the aerodynamic and friction losses of an air handling system in relation to the flow rate through that system. A system characteristic can be described as having a fixed system resistance or a variable system resistance. A fixed system resistance is one in which the system resistance usually varies as the square of the change in flow rate and all operating points always fall along the same system resistance line. A variable system resistance is one in which at least one active component of the system is capable of varying the ratio of flow to resistance pressure, such as a damper. The entire range of system operation should be determined before a fan selection is made in order to ensure that the fan selected will operate on the stable portion of the fan performance curve.

BA-A-1200 SYSTEM EFFECTS ON FAN PERFORMANCE

Actual system configurations often provide inlet and outlet conditions that cause uneven velocity profiles and swirls. This can seriously alter the fan's predicted performance. The amount a fan's performance is likely to be affected is called a *system effect factor* and should be added to the system resistance. System effect factors for fan systems may be estimated using AMCA 201.

BA-A-1300 FAN AND SYSTEM MATCHING

If the system resistance curve, composed of the resistance to flow of the system and the appropriate system effect factor, has been accurately determined, the fan selected will develop the equivalent and necessary pressure to meet the system requirements, and should deliver the designed CFM when installed in the system. The point of intersection of the system resistance curve and the fan performance curve determine the actual flow volume.

BA-A-1400 FAN-SYSTEM CAPACITY CONTROL

A fan and system operate at the intersection of the system resistance curve and the fan performance curve. This principle always holds true. Therefore, once a fan is installed, the only way to change the operating point is either to change the system resistance curve or the fan performance curve.

The principal method of changing the system curve is through use of a control damper. Since a control damper simply adds or removes the amount of restriction to the airflow within the system, the fan continues to operate at some point on its original performance curve. The use of an outlet or inlet damper to control an axial fan should not be permitted unless loading conditions are completely evaluated, as excessive dampering may cause:

Copyright ASME International
Provided by IHS under license with ASME
No reproduction or networking permitted without license from IHS
Not for Resale

(a) the fan blades to stall, which may cause system instability and possible fan failure;

(b) the driver cooling capability to be reduced, which may cause an overloading condition;

(c) the fan power characteristic to increase at reduced flow rates, which may cause an overloading condition.

The acceptable methods to change the fan performance curve of a fan used on nuclear safety-related systems are variable inlet vanes on a centrifugal fan and blade angle change on an axial fan.

BA-A-1500 MULTIPLE FAN SYSTEMS

When fans of equal rating operate in series, each handles the same flow rate and approximately one-half of the total system pressure. When fans of equal rating operate in parallel, each fan handles one-half the total flow rate at the same pressure. Fans and drivers should be sized so that if one fan should fail, the remaining fan remains stable and does not overload its driver.

Copyright ASME International
Provided by IHS under license with ASME
No reproduction or networking permitted without license from IHS
Not for Resale

NONMANDATORY APPENDIX BA-B
DIVISION OF RESPONSIBILITY

This Nonmandatory Appendix is intended to identify the roles normally assumed by the organizations responsible for fulfilling Code requirements when not specifically addressed in an article or subarticle. These are guidelines to assist with Code compliance and are not to be construed as legal or contractual responsibilities unless so invoked by the Owner or designee.

TABLE BA-B-1000
DIVISION OF RESPONSIBILITY

BA-	Item	Responsible Party
3200	Limitations on materials	Engineer
3400	Certificate of compliance	Manufacturer
4110	Performance	
	(a) fan type and blade shape	Engineer
	(b) airflow	Engineer
	(c) total pressure	Engineer
	(d) maximum discharge velocity	Engineer
	(e) air density at rating	Engineer
	(f) maximum air density expected	Engineer
	(g) operating temperature	Engineer
	(h) details of intake and discharge transitions	Engineer/Manufacturer
	(i) parallel fan operation	Engineer
	(j) peak design temperature	Engineer
4132	Internally generated missile analysis	Manufacturer
4133	Loading conditions	Engineer
4141	Leakage criteria, ducting	Engineer
4142.1	Air leakage for contamination control evaluation	Engineer
4150	Centrifugal fan support boundary	
	(a) size and type of anchorage	Engineer/Manufacturer
	(b) anchorage loads	Manufacturer
4210	Fans	
4211.1	Title and numbering	Engineer
4211.2	Duty cycle	Engineer
4211.3	Fan location	Engineer
4211.4	Environment	Engineer
4211.5	Drive arrangement	Engineer/Manufacturer
4211.6	Limitations	Engineer

Copyright ASME International
Provided by IHS under license with ASME
No reproduction or networking permitted without license from IHS
Not for Resale

TABLE BA-B-1000
DIVISION OF RESPONSIBILITY (CONT'D)

BA-	Item	Responsible Party
4212	(a) Flow rate	Engineer
	(b) Fan pressure	Engineer
	(c) Air density	Engineer
	(d) Air temperature	Engineer
	(e) Fan speed	Manufacturer
	(f) Fan power input	Manufacturer
4215	Construction information	Engineer [except 4215(c), Manufacturer]
4216	Base rating	Manufacturer
4217.1	Sound power level	Manufacturer
4217.2	Test data from actual fan	Manufacturer
4217.3	Test data from fan model	Manufacturer
4220	Drivers	
4221	(a) Speed torque curve	Manufacturer
	(b) Inertia	Manufacturer
	(c) External forces	Manufacturer
	(d) Power source	Engineer/Manufacturer
	(e) Environmental	Engineer
	(f) Driver and fan orientation	Engineer/Manufacturer
	(g) Standards	Engineer
	(h) Heater requirements	Engineer
4331(d)	Predetermined life	Engineer
4411	Rating calculations	Manufacturer
4412	Documentation of rating	Manufacturer
4421	Sound level data report	Manufacturer/Engineer
4431	Design verification stress report	Manufacturer
4432	Design verification test procedure	Manufacturer
	Design verification test report	Manufacturer
5112.3	Periodic inspections of test facility for qualification	Engineer
5113, 5150, 5200	Final test report	Manufacturer
5122	Test procedure details	Manufacturer
6100	Fabrication procedures	Manufacturer
6100	Witness and hold points	Engineer
7000	Packaging, shipping, and storage procedures	Manufacturer
8000	Documentation for Code verification	Manufacturer/Engineer
8120	Material certification report contents	Manufacturer
9300	Operating and maintenance manuals	Manufacturer

Copyright ASME International
Provided by IHS under license with ASME
No reproduction or networking permitted without license from IHS
Not for Resale

SECTION DA
DAMPERS AND LOUVERS

DA-1000	**Scope**	113
DA-1100	Purpose	113
DA-1200	Limit	113
DA-1300	Definitions and Terms	113
DA-2000	**Referenced Documents**	116
DA-3000	**Materials**	117
DA-3100	Allowable Materials	117
DA-3200	Special Limitations on Materials	117
DA-3300	Certification of Materials	120
DA-4000	**Design**	121
DA-4100	General Design	121
DA-4200	Technical Requirements	122
DA-4300	Actuators	125
DA-4400	Accessories	126
DA-5000	**Inspection and Testing**	128
DA-5100	Testing	128
DA-6000	**Fabrication, Finishing, and Installation**	130
DA-6100	Welding and Brazing	130
DA-7000	**Packaging, Shipping, and Storage**	131
DA-8000	**Quality Assurance**	132
DA-8100	Damper and Louver Performance	132
DA-8300	Quality Assurance Records	132
DA-9000	**Nameplates, Stampings, and Manuals**	133
DA-9100	Nameplates and Stampings	133
DA-9200	Manuals	133

Copyright ASME International
Provided by IHS under license with ASME
No reproduction or networking permitted without license from IHS
Not for Resale

Table

DA-3110 Allowable Materials 118

Mandatory Appendices

DA-I Frame Leakage 134

DA-II Damper and Louver Configurations 135

Nonmandatory Appendix

DA-A Division of Responsibility 141

Copyright ASME International
Provided by IHS under license with ASME
No reproduction or networking permitted without license from IHS
Not for Resale

ARTICLE DA-1000
SCOPE

This section encompasses the minimum requirements for the design, fabrication, materials, performance, acceptance testing, and quality assurance, as well as component nomenclature, for dampers and louvers used as components in nuclear safety-related air or gas treatment systems in nuclear facilities. Also included in this section are minimum design specification requirements for actuators and other control-related accessories used in conjunction with nuclear safety-related dampers and louvers.

DA-1100 PURPOSE

The purpose of this section is to identify and establish the requirements for the design, manufacture, shop test, and installation of dampers and louvers for use in air and gas treatment systems which are associated with nuclear facilities.

This section further identifies and establishes requirements for the installation of actuators and accessories, and for the performance of a damper and louver assembly.

DA-1200 LIMIT

DA-1210 EXCLUSION OF ITEMS

Valves whose design, manufacture, test, and installation are covered by the ASME Code, Section III, or ASME B31.1, are excluded from this section even though they may be used to perform the function of a damper.

DA-1220 EXCLUSION OF SPECIFIC DESIGNS

While certain minimum functional requirements of damper actuators and accessories are included in this section, it is not intended to include specific dimensional or material design requirements for these items.

DA-1230 BOUNDARY LIMITS

The requirements of this Code are limited to those parts which comprise a damper or louver assembly as defined in DA-1310. While general requirements are included for mating flanges and similar supports, the boundary limits are the damper or louver assembly, flange, or frame.

DA-1300 DEFINITIONS AND TERMS

DA-1310 COMPONENTS

accessories: solenoid valves, position switches, indicating lights, pressure regulators, and other similar components specified as part of the damper or louver assembly.

damper: an operable device used for the purpose of controlling pressure, flow volume, or flow direction in air or gas systems.

damper assembly: an assembly consisting of a damper, integrally mounted actuator, and any accessories required for its operation. The term also refers to a combination of two or more damper assemblies with interconnecting linkage to permit operation as a single unit.

damper and louver actuators (operators)

(a) heat or temperature operated actuator: a device utilizing heat or temperature to release the damper blades.

(b) manual actuators: devices which permit the blades of a damper to be positioned by the direct or indirect application of manual force, including such devices as levers, chain falls, gearboxes, and screw jacks.

Copyright ASME International
Provided by IHS under license with ASME
No reproduction or networking permitted without license from IHS
Not for Resale

(c) power-operated actuators: devices utilizing an external energy source to position the damper or louver blades in response to a controlled signal.

(d) self-contained actuators: devices and/or forces such as counterweights, springs, gravity, or airstream pressure used to actuate the blade(s).

louver: a fixed or adjustable device comprised of multiple blades which, when mounted in an opening, permits the flow of air but inhibits the entrance of other elements, such as rain or snow.

DA-1320 FUNCTION

backdraft prevention: preventing reversal of flow.

balancing: fixing the position of one or more dampers to establish a flow or pressure relationship in a system.

fire control: interrupting airflow automatically in the event of a fire so as to restrict the passage of flame through a part of an air system in order to maintain the integrity of fire rated separation.

flow control: varying or maintaining volumetric flow within a system in response to a signal.

isolation: separating a system or a portion of a system from selected flow paths.

pressure control: varying or maintaining a pressure within a system or space in response to a signal, or varying or maintaining a differential pressure between parts of a system or between spaces in response to a signal.

pressure relief: limiting differential pressures across a duct, casing, or building wall to a predetermined value.

tornado control: controlling airflow automatically to prevent the transmission of tornado pressure surges.

DA-1330 CONFIGURATION

See Appendix DA-II for illustration of the following terms.

adjustable louver: a louver in which the blades may be repositioned.

curtain-type damper: a damper with interlocking blades that fold together, and open and unfold to form a continuous restrictive barrier such as in a curtain type fire damper.

fixed louver: a louver in which the blades do not move.

opposed blade damper: a multiblade damper having blades which rotate in opposite directions.

parallel blade damper: a multiblade damper having blades which rotate in the same direction.

poppet damper: a single-blade damper with linear blade movement always perpendicular to the seat.

single-blade damper: a damper having one centrally pivoted, balanced blade.

slide gate guillotine damper: a damper with blades which move perpendicular to the airstream and are supported by parallel guides.

wing blade damper: a damper with one or more pairs of edge-pivoted blades rotating in opposite directions about a common central support member.

DA-1340 LEAKAGE AND BLADE OPERATING POSITIONING

failsafe position: the position assumed by the blades upon loss of the controlling signal.

frame leakage: the amount of air or gas which will pass through the frame (external pressure boundaries) of a damper at a specific differential pressure across the pressure boundary with the damper either open or closed.

normal operating position: the normal operating position of the louver or damper blades in response to a control signal.

seat leakage: the amount of air or gas that will pass between or around the blades when in a closed position at a specific differential pressure across the blades.

DA-1350 PRESSURE

blade design pressure: the maximum positive or negative differential pressure that may occur across the blades, which is the sum total of the operating pressure and all other possible additional pressure differentials.

frame design pressure: the maximum positive or negative differential pressure that may occur between the inside and outside of the damper frame, which is the sum total of the operating pressure and all other possible additional pressure differentials.

operating pressure: the maximum positive or negative differential pressure that may occur during normal operation. Included are pressures of normal design

Copyright ASME International
Provided by IHS under license with ASME
No reproduction or networking permitted without license from IHS
Not for Resale

airflows and impact pressures from rapid changes of other devices in a system.

pressure drop: the system static pressure loss in fluid pressure caused by the flow of air or gas through a full or partially open component.

DA-1360 TEMPERATURE

ambient design temperatures: the highest and lowest temperature surrounding the exterior of the damper or louver.

internal design temperatures: the highest and lowest temperature of the air or gas passing through the damper or louver.

DA-1370 TESTS

performance test(s): a test(s) made on an individual or lot of components to verify performance in accordance with specified requirements.

qualification test(s): a test(s) which establishes the suitability of a component for a given application, generally made on either a prototype or on a sample from a typical production lot of the component.

DA-1380 CONSTRUCTION

fire damper construction: construction suitable to pass the criteria of Underwriters Laboratories Standard UL-555 and labeled under the UL Follow-Up Service Requirements for Fire Resistance Construction for 1 hr or 3 hr.

NOTE: Such construction will satisfy the requirements of DA-3211, DA-4220, and the temperature limits of DA-3120.

gastight construction: fabrication of a component and component housing to prohibit passage of air or gas through the external pressure boundaries.

DA-1390 TORQUE

breakaway torque: the torque required to move the blades from the closed and sealed position with the operating design pressure being applied across the closed blades.

dynamic torque: the torque required to move the damper or louver blades in either direction while being acted upon by the forces, at all blade positions from full open to near closed, created by the airflow and the pressure drop.

friction torque: the torque required to overcome friction of such items as bearings, stuffing boxes, linkage, etc.

seating torque: the torque required to properly seat the seals and limit the leakage to the specified amount.

Copyright ASME International
Provided by IHS under license with ASME
No reproduction or networking permitted without license from IHS
Not for Resale

ARTICLE DA-2000
REFERENCED DOCUMENTS

The codes and standards referenced below shall supplement those documents listed in Section AA.

AMCA 500-1983, Test Methods for Louvers, Dampers, and Shutters

Publisher: Air Movement and Control Association International, Inc. (AMCA), 30 West University Drive, Arlington Heights, IL 60004-1893

NFPA-90A-1981, Standard for the Installation of Air Conditioning and Ventilation Systems

NFPA-803-1978, Standard for Fire Protection for Nuclear Power Plants

Publisher: National Fire Protection Association (NFPA), 1 Batterymarch Park, Quincy, MA 02269-9101

UL-555-1979, Standard for Safety, Fire Dampers, and Ceiling Dampers

Publisher: Underwriters Laboratories, Inc. (UL), 333 Pfingsten Road, Northbrook, IL 60062-2096

Copyright ASME International
Provided by IHS under license with ASME
No reproduction or networking permitted without license from IHS
Not for Resale

ARTICLE DA-3000
MATERIALS

DA-3100 ALLOWABLE MATERIALS

DA-3110 MATERIALS OF CONSTRUCTION

Materials used in the construction of frames, blades, shafts, and linkages shall conform to requirements of specifications for materials given in Table DA-3110.

DA-3120 ALLOWABLE STRESS

Allowable stress values for the design of frames, blades, shafts, and linkages are specified in Article AA-4000.

At temperatures above 650°F (343°C) for ferrous material or 200°F (93°C) for nonferrous material, the special limitations cited in DA-3211 shall apply.

DA-3130 BEARING MATERIALS

Bearing materials shall conform to the requirements of DA-4250.

DA-3140 SEAL MATERIALS

Seal materials shall conform to the requirements of DA-4260.

DA-3200 SPECIAL LIMITATIONS ON MATERIALS

DA-3210 METALS

DA-3211 Physical Properties Reduction

The reduction in the physical properties of metals at higher temperatures must be recognized and factored into the design of dampers used in high temperature application, particularly where fire hazard is involved.

DA-3212 Galvanic Corrosion

The possibility of galvanic corrosion due to the relative potentials of aluminum, copper, and their alloys should be considered when used in conjunction with each other, or with steel or other metals and their alloys.

DA-3213 Corrosive Vapors

Aluminum and zinc shall not be used in the presence of corrosive vapors unless protected by coatings or other suitable means designed to prevent deterioration of the metal.

DA-3220 NONMETALLIC MATERIALS

The use of nonmetallic materials such as plastics, elastomers, and similar substances is permitted in the construction of components provided that in the selection of these materials, consideration is given to

(a) destruction where fire hazards exist, including toxicity;

(b) degradation of properties caused by temperature increase, radiation exposure, chemical exposure, and aging; and

(c) maintainability.

DA-3230 DETERIORATION OF MATERIALS IN SERVICE

It is the responsibility of the Owner or his designee to identify the environment in which the components must operate so that the Manufacturer can select the grade of materials to meet the conditions stated in the design specification.

Copyright ASME International
Provided by IHS under license with ASME
No reproduction or networking permitted without license from IHS
Not for Resale

TABLE DA-3110
ALLOWABLE MATERIALS

ASME Designator	Publication Title
	ASME Ferrous Material Specifications
Pipe	
SA-106	Seamless Carbon Steel Pipe for High-Temperature Service
SA-134	Electric-Fusion (Arc)-Welded Steel Plate Pipe
SA-135	Electric-Resistance-Welded Steel Pipe
SA-155	Electric-Fusion-Welded Steel Pipe for High-Pressure Service
SA-312	Seamless and Welded Austenitic Stainless Steel Pipe
SA-335	Seamless Ferritic Alloy-Steel Pipe for High-Temperature Service
SA-530	General Requirements for Specialized Carbon and Alloy-Steel Pipe
Tubing	
SA-213	Seamless Ferritic and Austenitic Alloy-Steel Boiler, Superheater, and Heat Exchanger Tubes
Plates	
SA-240	Chromium and Chromium–Nickel Stainless Steel Plate, Sheet, and Strip for Fusion-Welded Unfired Pressure Vessels
SA-285	Plates for Pressure Vessels
SA-515	Carbon Steel Plates for Pressure Vessels for Intermediate and High-Temperature Service
SA-516	Carbon Steel Plates for Pressure Vessels for Moderate and Low-Temperature Service
Forgings	
SA-105	Forged or Rolled Steel Pipe Flanges, Forged Fittings, and Valves and Parts for High-Temperature Service
SA-181	Forged or Rolled Steel Pipe Flanges, Forged Fittings, and Valves and Parts for General Service
SA-182	Forged or Rolled Alloy-Steel Pipe Flanges, Forged Fittings, and Valves and Parts for High-Temperature Service
Bolts, Nuts, and Studs	
SA-193	Alloy-Steel Bolting Materials for High-Temperature Service
SA-194	Carbon and Alloy-Steel Nuts for Bolts for High-Pressure and High-Temperature Service
SA-307	Low-Carbon Steel Externally and Internally Threaded Standard Fasteners
SA-354	*Quenched and Tempered Alloy-Steel Bolts and Studs with Suitable Nuts*
Castings	
SA-216	Carbon Steel Castings Suitable for Fusion Welding for High-Temperature Service
SA-217	Alloy-Steel Castings for Pressure Containing Parts Suitable for High-Temperature Service
SA-351	Ferritic and Austenitic Steel Castings for High-Temperature Service
Structural Components	
SA-36	Structural Steel
SA-283	Low- and Intermediate-Tensile Strength Carbon Steel Plates of Structural Quality
	ASME Nonferrous Material Specifications
SB-209	Aluminum Alloy Sheet and Plate

Copyright ASME International
Provided by IHS under license with ASME
No reproduction or networking permitted without license from IHS
Not for Resale

TABLE DA-3110
ALLOWABLE MATERIALS (CONT'D)

ASME Designator	Publication Title
	ASME Nonferrous Material Specifications (Cont'd)
SB-211	Aluminum Alloy Bars, Rods, and Wire
SB-221	Aluminum Alloy Extruded Bars, Rods, and Shapes
	ASTM Ferrous Material Specifications
	Structural Components
A-36	Structural Steel
A-108	Steel Bars, Carbon, Cold-Finished, Standard Quality
A-176	Stainless and Heat-Resisting Chromium–Nickel Steel Plate, Sheet, and Strip
A-242	High-Strength, Low-Alloy Structural Steel
A-276	Stainless and Heat-Resisting Steel Bars and Shapes
A-284	Low- and Intermediate-Tensile Strength Carbon Steel Plates for Machining and General Construction
A-575	Steel Bars, Carbon, Merchant Quality "M" Grades
A-576	Steel Bars, Carbon, Hot-Wrought, Special Quality
	Plate, Sheet, and Strip
A-123	Zinc (Hot-Galvanized) Coatings on Products Fabricated from Rolled, Pressed, and Forged Steel Shapes, Plates, Bars, and Strip
A-167	Stainless and Heat-Resisting Chromium–Nickel Steel Plate, Sheet, and Strip
A-240	Heat-Resisting Chromium and Chromium–Nickel Stainless Steel Plate, Sheet, and Strip for Fusion Welded Unfired Pressure Vessels
A-366	Cold-Rolled Carbon Steel Sheet, Commercial Quality
A-446	Steel Sheet, Zinc-Coated (Galvanized) by the Hot-Dip Process, Structural (Physical) Quality
A-480	General Requirements for Flat-Rolled Stainless and Heat-Resisting Steel Plate, Sheet, and Strip
A-484	General Requirements for Stainless and Heat-Resisting Wrought Steel Products (Except Wire)
A-525	General Requirements for Steel Sheet, Zinc-Coated by Hot-Dip Process
A-526	Steel Sheet, Zinc-Coated by Hot-Dip Process, Commercial Quality
A-527	Steel Sheet, Zinc-Coated by Hot-Dip Process, Lock-Form Quality
A-570	Hot-Rolled Carbon Steel Sheet and Strip, Structural Quality
A-582	Free-Machining Stainless and Heat-Resisting Steel Bars, Hot-Rolled or Cold-Finished
A-606	Steel Sheet and Strip, Hot- and Cold-Rolled, High-Strength, Low-Alloy with Improved Corrosion Resistance
A-607	Steel Sheet and Strip, Hot- and Cold-Rolled, High-Strength, Low-Alloy Columbium and/or Vanadium
A-611	Steel, Cold-Rolled Sheet, Carbon, Structural
	ASTM Nonferrous Material Specifications
	Tubing
B-68	Seamless Annealed Soft Copper Tubing
B-75	Seamless Copper
B-88	Seamless Copper Tube

Copyright ASME International
Provided by IHS under license with ASME
No reproduction or networking permitted without license from IHS
Not for Resale

DA-3300 CERTIFICATION OF MATERIALS

The Manufacturer shall make available, as a minimum, certified test reports of chemical and physical properties of material and hardware for stress components such as related accessories including frames, blades, shafts, and linkages. For those ASTM materials which do not have physical testing required by the ASTM specification, testing should be performed per ASTM A 370.

All other components used in the construction of the damper shall be provided with a manufacturer's certificate of compliance covering the ASME or ASTM material specification, grade, and class, if applicable.

Copyright ASME International
Provided by IHS under license with ASME
No reproduction or networking permitted without license from IHS
Not for Resale

ARTICLE DA-4000
DESIGN

DA-4100 GENERAL DESIGN

Design of dampers and louvers shall be in accordance with the requirements of Section DA and of those portions of Section AA invoked in Section DA.

DA-4110 REQUIREMENTS OF DESIGN SPECIFICATIONS

Design specifications prepared by the Owner or his designee in sufficient detail to provide a complete basis for design and manufacture in accordance with this Code shall include, as applicable

(a) reference to this Code;

(b) function, as defined in DA-1320;

(c) configuration, as defined in DA-1330;

(d) maximum allowable seat and frame leakage and the specific differential pressures, as defined in DA-1340 and Mandatory Appendix DA-I;

(e) pressures, as defined in DA-1350;

(f) temperatures, as defined in DA-1360;

(g) volumetric flow rate at defined temperature, pressure, and density;

(h) maximum relative humidity of the air or gas stream;

(i) maximum design pressure drop at design volumetric flow rate;

(j) composition, concentration, and nature of the entrained contaminants in the air or gas stream;

(k) normal operating position and failsafe position of blades;

(l) installation parameters;

(m) mounting configuration and support, i.e., flange mounted, inside-of-duct mounted, wall or cantilevered mounting;

(n) orientation of damper and direction of airflow;

(o) blade orientation relative to frame;

(p) maximum closure and opening time;

(q) actuator data, as required by DA-4300;

(r) anticipated number of operating cycles (e.g., specify number for two-position or state "continuous operation" for modulating service);

(s) allowable materials per Article DA-3000;

(t) special requirements for blades, frames, linkages, seals, and bearings;

(u) accessories required and mounting location;

(v) any and all anticipated internal and external loadings other than pressures;

(w) combination of loading conditions, seismic requirements, and the design transients applicable to the appropriate service level per Article AA-4000;

(x) radiation integrated life dose and maximum dose rate (rad/unit time);

(y) finish and coating requirements; and

(z) fire resistance rating as $1\frac{1}{2}$ hr or 3 hr.

DA-4120 REQUIREMENTS OF THE MANUFACTURER

When required by the design specifications, documentation provided by the Manufacturer to the Owner or his designee shall include the following, as applicable:

(a) mounting connection details;

(b) weight and center of gravity;

(c) service connections, size, type, and locations;

(d) pressure drop at rated flow;

(e) maximum seat and frame leakage at design pressures;

(f) maximum closure and opening time at stated conditions;

(g) materials of construction;

(h) bearing design life;

(i) seal design life;

(j) actuator torque supplied;

(k) damper or louver torque required;

(l) actuator environmental and seismic qualifications;

(m) verification of structural integrity, performance, and qualification in accordance with Article AA-4000;

(n) actuator position or orientation; and

Copyright ASME International
Provided by IHS under license with ASME
No reproduction or networking permitted without license from IHS
Not for Resale

(o) UL fire resistance rating and UL installation instructions.

DA-4130 PERFORMANCE REQUIREMENTS

DA-4131 Seat Leakage

Seat leakage shall be equal to or less than the amount shown in Mandatory Appendix DA-I for the class specified in the design specification.

DA-4132 Frame Leakage

Frame leakage shall be equal to or less than the amount shown in Mandatory Appendix DA-I for the class specified in the design specification.

DA-4133 Pressure Drop

Pressure drop shall be less than or equal to that stated in the design specification at the design volumetric flow rate.

DA-4134 Fire Ratings

Fire dampers shall have a $1\frac{1}{2}$ hr or 3 hr rating in accordance with UL-555 as determined by NFPA 90A and NFPA 803.

DA-4135 Fire Damper Closure

The fire damper shall close against the specified volumetric flow rate and specified operating pressure.

DA-4136 Cycle Time

The damper must cycle full open to full closed or full closed to full open within the time specified in the design specification.

DA-4200 TECHNICAL REQUIREMENTS

DA-4210 STRUCTURAL

DA-4211 General

Dampers or louvers shall be designed in accordance with the structural requirements given in Article AA-4000. Structural requirements and load definitions are given in DA-4212 through DA-4214.

DA-4212 Support Boundary

DA-4212.1 Methods of Support. A damper or louver assembly may be supported by one or more of several methods. It may be line supported as an assembly inserted into a run of duct; it may have its support at its end attachments to the duct and be totally supported by that line of duct; or it may be flange mounted to a bulkhead type of building structure or auxiliary structure.

(a) Line Supported Assembly. The support boundary for this case shall be the interface flanges or other mechanical connections designed to transfer all components of load across the joints.

(b) Bulkhead or End Supported Assembly. The support boundary for this case shall also be the interface flanges or other mechanical connections or structural connections designed to transfer all components of load.

(c) Side, Top, or Bottom Supported Assembly. The support boundary for this case shall be the attachment point for the assembly. Although support to the building superstructure, auxiliary steel, equipment foundation, or other structure represents ground for the damper, that support is not included in the scope of this section.

DA-4212.2 Documentation. The damper or louver Manufacturer shall be responsible for providing all information necessary to define the support boundary interfaces. The interface control information to be specified shall include but not necessarily be limited to the following:

(a) identification of any special support requirements as well as the configuration and size of the damper flanges;

(b) magnitudes and directions of all loads imposed on the anchorage points, including all static, dynamic, and operational loads resulting from the installed assembly. Load data shall be provided in a form which shall allow combinations to be considered as required in Article AA-4000.

(c) other information, such as bending moments, shear forces, axial loads, torsional moments, or stiffness requirements necessary to assure that the damper or louver can perform its required safety function under all design conditions.

DA-4213 Loads

Loads to be considered are as given in AA-4211 and AA-4212 with the following clarifications.

DA-4213.1 Normal Loads. Normal loads N shall include:

Copyright ASME International
Provided by IHS under license with ASME
No reproduction or networking permitted without license from IHS
Not for Resale

actuator load: the load or loads imposed by the actuator to a specific area of the assembly.

deadweight load: the load imposed by the weight of all components of the assembly.

externally concentrated load: the load or loads imposed by the application of an external force to a limited area of the assembly.

normal equipment interface load: the normal externally applied load or loads from other equipment attached to the assembly.

operating pressure load: load resulting from the maximum positive or negative differential pressure which may occur during normal operation. Included are loads imposed by normal design airflows and impact pressures resulting from rapid change of other devices in a system.

DA-4213.2 Thermal Loads. Thermal loads T shall include loads resulting from constraint of forces and displacements caused by temperature variations.

DA-4213.3 Other Loads. Other specific load conditions such as shock loads due to pressure transients shall be provided in the design specification to allow loads to be combined for the service levels as required under AA-4212 and compared to the applicable service limits required under AA-4214 and AA-4230 and other criteria imposed under AA-4240 and stress limits of this section.

DA-4214 Structural Verification

The technical and documentation requirements of AA-4000 shall apply to verification of design by analysis, test, or comparison.

DA-4215 Special Considerations

(a) Frame deflection under normal and upset plant conditions (Service Levels A and B) shall not exceed $^1/_{360}$ of the span in any direction, or $^1/_8$ in. (3.175 mm), whichever is less.

(b) Blade edge or center line deflection under normal and upset plant conditions (Service Levels A and B) shall not exceed $^1/_{360}$ of the blade length (or diameter) or $^1/_8$ in. (3.175 mm), whichever is less.

(c) The blade edge and center line deflection under loads due to normal plant conditions shall not allow the leakage criteria to be exceeded.

(d) Fire damper design shall be based on loads imposed on damper blades when closing with design volumetric flow rate and pressures present.

DA-4220 THERMAL EXPANSION

To prevent binding and restraint of free movement, the design shall provide for the relative motions that occur between components due to variations of temperature and coefficients of expansion. Such provisions for differential expansion shall include, as a minimum:

(a) blade end clearances
(b) bearing clearances
(c) longitudinal movement of the shafts
(d) sealing capabilities

DA-4230 TORQUE

DA-4231 Torque Determinations

In determining the torque required to actuate the blades, the Manufacturer shall consider the blade position and direction of the applied torque to produce the desired movement. At the maximum specified operating pressure this determination shall include, as a minimum, the following torque components:

(a) breakaway torque
(b) dynamic torque
(c) friction torque
(d) seating torque

DA-4232 Actuator Torque

The actuator and associated linkage shall deliver to the damper or louver a minimum of $1^1/_2$ times the maximum torque as determined in DA-4231, except for self-contained actuators used to counterbalance a specific force, and must be designed to match the required torque. Actuators shall be evaluated in both directions for the maximum torque, at the beginning of the blade movement, while stroking the blades through the full range of movement.

DA-4240 LINKAGE

DA-4241 Linkage Components

The linkage includes the arms, brackets, pivots, bars, levers, and fasteners required to perform the following functions:

(a) interconnect the blades of multibladed dampers or louvers so they act in unison;

(b) interconnect the actuator and blades so as to provide the desired operation.

Copyright ASME International
Provided by IHS under license with ASME
No reproduction or networking permitted without license from IHS
Not for Resale

DA-4242 Linkage Design

Linkage design shall include the following minimum requirements:

(a) Brackets, arms, and levers shall be of a length and stiffness to provide stable operation of the blades at the maximum specified operating pressure and airflow without flutter or binding at all blade positions.

(b) The linkage system shall be designed to transmit sufficient torque to each blade to set the seals of each and every blade at the maximum specified operating pressure and airflow to limit leakage to less than the specified leakage.

(c) All linkage components shall be designed to transmit a minimum of $1\frac{1}{2}$ times the torque required by DA-4231 without exceeding the allowable stress listed in Article AA-4000.

(d) If a linkage system is designed to be field adjustable, suitable locking devices such as jam nuts, etc., shall be provided.

(e) The linkage sysem shall be designed to be compatible with the actuator selected for the application.

DA-4250 BEARINGS

DA-4251 General Application

(a) Bearings shall permit axial shaft movement to provide for operating clearances and differential expansion in both vertical and horizontal installations.

(b) Bearing materials shall be selected for the loading and environmental conditions to which the bearings will be subjected.

DA-4252 Bearing Types

DA-4252.1 Metallic Sleeve Bearings. Sintered sleeve bearing material shall be lubricant-impregnated bronze or stainless steel. Solid sleeve bearing material shall be bronze or stainless steel and shall be lubricated prior to shipment, and provisions should be made for lubrication in the field.

DA-4252.2 Nonmetallic Sleeve Bearings. Nonmetallic sleeve bearings, i.e., phenolic, nylon, and similar materials, may be used subject to the limitations of DA-3220.

DA-4252.3 Rolling Element Bearings. Premounted bearing assemblies, flanges, or pillow blocks shall be self-aligning and mounted in such a manner as to be replaceable. Grease fittings shall be provided when the lubricant must be periodically renewed. Flanges and pillow blocks are to be made of steel, malleable iron, or cast iron.

DA-4253 Bearing Design

(a) Bearing running surfaces of sleeve bearings shall have a finish as recommended by the bearing Manufacturer.

(b) Sleeve bearings shall be contained to prevent axial displacement and to prevent rotational movement except between the intended bearing surfaces.

(c) Sleeve bearings shall have a bearing load surface diameter difference as recommended by the bearing Manufacturer to provide rotational clearance.

(d) Sleeve bearing wall thickness shall be as recommended by the bearing Manufacturer.

(e) Rolling element bearings shall be sized to allow bearings to be slipped onto the shaft. The maximum clearance in shaft diameter shall be as recommended by the bearing Manufacturer, plus clearance for thermal expansion.

DA-4254 Bearing Loading

(a) Sleeve bearing loading on the radial and thrust load areas shall not exceed 67% of the bearing Manufacturer's recommended static load rating.

(b) Sleeve bearing radial load area shall, as a minimum, be equal to one-quarter of the diameter times the length supported by the bearing housing or damper/louver frame.

(c) When sleeve bearings are subjected to thrust loads, a thrust washer shall be used to transmit the load to the bearing, or the load transmitting member shall meet the requirement of DA-4252.1.

(d) Maximum radial or thrust loading on rolling element bearings shall not exceed the bearing Manufacturer's recommended static load rating.

(e) The calculated load on each bearing shall consist of all design forces applied to that bearing, including that of the actuator and linkage.

DA-4260 SEALS

DA-4261 General

Seals may be utilized to reduce seat leakage and frame leakage to the degree required by the design specification. The control of seat leakage requires seals such as metal or elastomer blade edges, stops, or seats. Control of frame leakage may require shaft seals such as stuffing boxes or cover plates.

Copyright ASME International
Provided by IHS under license with ASME
No reproduction or networking permitted without license from IHS
Not for Resale

DA-4262 Design

The seal design shall maintain the specified leakage limits during the design life of the seal.

Where the design life of the assembly exceeds the life expectancy of the seal material, the seals shall be replaceable, and the means of attaching the seal or installing the packing in a stuffing box shall be so designed to facilitate their replacement. When environmental or system conditions prevent the use or the replacement of elastomer seals, metal seals or seats shall be considered.

DA-4263 Material

Selection of seal material by the damper Manufacturer shall be based on specific system design performance requirements and environmental conditions to which it is exposed.

Physical characteristics of the seal material, such as compression set, tensile strength, hardness, and elasticity, must be verified by generic or individual tests prior to determining the material to be used for a particular seal as well as determining the design life of that seal.

The design life of the seal is the length of time that the seal will function properly while the seal material experiences mild degradation of its molecular structure caused by the aging process of the environment.

DA-4270 FRAME CONSTRUCTION

DA-4271 Frame Construction Class A or B

Dampers requiring frame construction to Leakage Rate Class A or B (see Mandatory Appendix DA-I) shall be provided with stuffing boxes, gasketted cover plates, or other sealing devices to reduce frame leakage to less than or equal to that stated in the design specification.

DA-4272 Gasket and Packing Material Requirements

Gasket and packing materials shall conform to the requirements of DA-3220, DA-3230, and DA-4263.

DA-4280 MOUNTING OF ACTUATORS AND ACCESSORIES

DA-4281 Mounting Structure

Each actuator and/or accessory shall be provided with a rigid structure suitable for mounting such devices.

DA-4282 Accessibility

The arrangement of actuators and accessories shall provide accessibility for removal and replacement of each component.

DA-4283 Mounting Structure Material

The structure for mounting actuators and accessories shall be fabricated of material listed in Table DA-3110. Structures shall be designed as required by Article AA-4000.

DA-4284 Attachment of Actuators and Accessories

Actuators and accessories shall be attached to the mounting structure with removable fasteners, of materials listed in Table DA-3110, sized to conform to the stress limitations stated in Article AA-4000.

DA-4285 Linkage Adjustability

The actuator mounting or linkage shall permit adjustment to achieve the required positioning of the blades at each end of the actuator movement.

DA-4300 ACTUATORS

DA-4310 POWER-OPERATED ACTUATORS

DA-4311 Torque Required

The actuator shall be capable of providing the torque required by DA-4232.

DA-4312 Forces and Loads on Actuators

Determination of actuator capability shall include consideration of forces transmitted to the actuator directly, through the mounting, and through the linkage; especially side loads on extended rods, and impact loads caused by acceleration and deceleration of blades.

DA-4313 Acceleration and Deceleration Loads

Actuator design shall include consideration of loads caused by acceleration and deceleration of connected components such as blades, springs, and counterbalances.

Copyright ASME International
Provided by IHS under license with ASME
No reproduction or networking permitted without license from IHS
Not for Resale

DA-4314 Actuator Voltage or Pressure Load Rating

The actuator rating shall be based on the minimum specified voltage or pressure.

DA-4315 Power Actuator Specification Requirements

The design specification shall include the following as a minimum to establish requirements for actuator performance:

(a) function
  (1) two-position or modulating
  (2) fail open, closed, or last position
  (3) power to open or power to close
(b) power source
  (1) type (such as electric, pneumatic, hydraulic)
  (2) characteristics (such as voltage, pressure, and their ranges)
(c) control signal characteristics
(d) frequency of actuation
(e) damper opening and closing time
(f) environmental conditions
(g) mounting location and any limitations on space and orientation
(h) manual override requirements
(i) accumulator sizing requirements
(j) actuator environmental and seismic qualifications
(k) type of motion (linear or rotary)

DA-4320 MANUAL ACTUATORS

Manual actuators should be equipped with locking devices and position indicators.

DA-4321 Torque Requirements

Manual actuators shall be capable of delivering the torque required by DA-4232. Manual actuator components shall be sized as required by Article AA-4000.

DA-4322 Forces and Loads on Actuators

Determination of manual actuator capability shall include consideration of forces transmitted to the actuator directly and through the linkage, including side loads on extended rods.

DA-4323 Maximum Input Forces

Input force required to operate manual actuators shall not exceed 25 lb.

DA-4330 SELF-CONTAINED ACTUATORS

Self-contained actuators shall be capable of delivering the torque required by DA-4231.

DA-4340 HEAT- OR TEMPERATURE-OPERATED ACTUATORS

Heat- or temperature-operated actuators such as fusible links shall be in accordance with NFPA 90A.

DA-4400 ACCESSORIES

DA-4410 ACCESSORY REQUIREMENTS

As required by the design specification, the damper or louver assembly shall be provided with appropriate accessory equipment to provide proper function and performance of the assembly.

DA-4420 AUXILIARY ENERGY SOURCE

When required by the design specification, actuators shall be provided with an auxiliary energy source, such as springs, counterweights, or accumulators.

DA-4430 MODULATING ACTUATOR REQUIREMENTS

When required by the design specification, actuators for modulating service shall be provided with a pilot positioner or similar device to assure controlled positioning of the damper in response to the control signal.

DA-4440 POSITION INDICATORS

When required by the design specification, local position indicators shall be provided to enable surveillance and operability verification.

DA-4450 ENVIRONMENTAL DESIGN REQUIREMENTS

Electrical devices such as position indicating switches, limit switches, and all other electrical components shall comply with the applicable IEEE standard(s) stated in the design specification. All other pneumatic, hydraulic, or other type of accessories shall be suitable for the environment specified in the design specification.

Copyright ASME International
Provided by IHS under license with ASME
No reproduction or networking permitted without license from IHS
Not for Resale

DA-4460 PIPING OF PNEUMATIC ACTUATORS

For pneumatically actuated dampers or louvers, the pneumatic piping system required for the operation of the assembly shall be arranged to provide a single field connection for each supply, or a control signal source for each assembly. Pneumatic piping system materials and installation shall conform to the requirements of the design specification. Pipe sizes shall be provided to assure operation within the specified operating time.

DA-4470 ELECTRICAL WIRING REQUIREMENTS

For electrically actuated dampers or louvers, interconnecting electrical wiring required for the operation of the actuators and accessories shall not be installed, unless specifically required by the design specification. When interconnecting electrical wiring is required by the design specification, the design specification shall specifically identify all interface materials and installation requirements for each assembly.

Copyright ASME International
Provided by IHS under license with ASME
No reproduction or networking permitted without license from IHS
Not for Resale

ARTICLE DA-5000
INSPECTION AND TESTING

Inspection and testing of louvers and dampers shall be in accordance with the requirements of this Article and of AA-5100, AA-5200, AA-5300, AA-5410, AA-5500, and AA-5800. The Manufacturer shall be responsible for establishing the written visual examination procedures and necessary tolerances to assure that the products are built to the Manufacturer's drawings. Examination procedures shall include appropriate checklists to verify that the required observations were performed. Written reports of visual inspection shall contain, as a minimum, the requirements of AA-5200.

DA-5100 TESTING

The purpose of this subarticle is to ensure the performance of the damper or louver prior to its installation. Acceptance shall be based on the performance requirements of DA-4140. The use of the test shall be at the discretion of the Engineer as related to the service requirements. Specific tests required by the Engineer shall be specified in the design specification.

DA-5110 PRESSURE DROP TESTING

Pressure drop data shall be based on tests performed in accordance with AMCA Standard 500. The AMCA Standard figure number used shall be stated with the pressure drop data.

DA-5120 CYCLE TIME AND CYCLE REPETITION

DA-5121 Required Cycles

The damper or louver assembly, as applicable, shall be cycled a minimum of 10 times from the full-open to the full-closed position to verify the free operation of all parts and the correct adjustment, positioning, and seating of all blades.

DA-5122 Pneumatic Air Pressure

The minimum specified air pressure shall be used for pneumatic operators during cycling.

DA-5123 Cycle Time

The maximum time for operation of any of the cycles shall be compared with the allowable specified cycle time. If the specified time is exceeded, the necessary correction shall be made and the cycle test repeated.

DA-5124 Operational Requirements

Determine that movement of the blades, actuators, and linkage shall be smooth and without hesitation, and limit switches operate in their intended position.

DA-5130 FRAME LEAKAGE TESTING FOR FRAME LEAKAGE CLASSES A AND B

Pressure plates shall be bolted to the inlet and outlet side of the damper. The chamber created shall be pressurized to the specified frame design pressure with the blades partially open. Testing for Leakage Class A shall be in accordance with the bubble method of DA-5141, with the bubble solution applied to the frame. Testing for Leakage Class B shall use a calibrated flowmeter outlined in DA-5143. Leakage shall be equal to or less than the amount shown in Mandatory Appen-

Copyright ASME International
Provided by IHS under license with ASME
No reproduction or networking permitted without license from IHS
Not for Resale

dix DA-I for the leakage class specified in the design specification.

DA-5140 SEAT LEAKAGE TESTING

Seat leakage testing shall be performed or verified after cycle time and cycle repetition testing and frame leakage testing. Leakage shall be equal to or less than that stated in Mandatory Appendix DA-I.

DA-5141 Seat Leakage Test for Leakage Class 0 Dampers (Bubble Method)

The damper shall be bolted to a pressure chamber which is then pressurized to the specified blade design pressure. A bubble solution (a commercial test solution or a solution consisting of equal parts liquid detergent, glycerine, and water) shall be applied to the damper seat area to be tested. A few moments later, but before the soap solution can dry, check the wetted areas and mark places where bubbles are being generated.

Unless otherwise specified, a leak indication is any bubble $^{1}/_{16}$ in. (1.58 mm) diameter that forms in 1 sec, or a bubble $^{9}/_{32}$ in. (7.14 mm) that forms in 1 min.

DA-5142 Seat Leakage Test for Leakage Class II or III Dampers or Louvers

Leakage data shall be based on tests performed in accordance with AMCA 500 or other approved methods.

DA-5143 Seat Leakage Test for Leakage Class I Dampers

The damper shall be bolted to a pressure chamber which is then pressurized to the specified blade design pressure using compressed air of instrument air quality. The inlet compressed air line shall have a calibrated flowmeter capable of resolving flow to within ±10% of allowable leakage in the line to measure all air passing through the damper.

DA-5144 Fire Damper Closure Test

The fire dampers shall be tested in accordance with AMCA 500-83 using Fig. 5.4, 5.5, or 5.7 for wall or floor transfer applications; and Fig. 5.1, 5.2, or 5.3 for applications of the damper in ducts with dampers installed in their intended position. For closure under dynamic airflow conditions, the damper shall be tested at the specified volumetric flow rate when open and to the maximum operating pressure when closed.

Copyright ASME International
Provided by IHS under license with ASME
No reproduction or networking permitted without license from IHS
Not for Resale

ARTICLE DA-6000
FABRICATION, FINISHING, AND INSTALLATION

Article AA-6000 shall apply for fabrication, finishing, and installation, except that the design and seismic qualifications of the damper assembly are based on the damper assembly being adequately supported for the appropriate loads. The Owner or his designee shall provide supports for the damper assembly to ensure that the damper is adequately supported as required by the Manufacturer's requirements and DA-4212. All of the welding codes or standards listed are allowed. In addition, installation of UL fire dampers shall be in accordance with the Manufacturer's UL installation instructions.

DA-6100 WELDING AND BRAZING

Specific welding and brazing parameters shall conform to the requirements of Article AA-6000.

Copyright ASME International
Provided by IHS under license with ASME
No reproduction or networking permitted without license from IHS
Not for Resale

ARTICLE DA-7000
PACKAGING, SHIPPING, AND STORAGE

Packaging, shipping, and storage of damper and louver assemblies shall be in accordance with the requirements of Article AA-7000. Implementation requires an ANSI/ASME NQA-2 classification level for packaging, shipping, receiving, storage, and handling of all items. Such classification is as follows:

(a) dampers or louvers only: Level C
(b) electric actuator: Level B
(c) actuator, other than electric: Level C
(d) accessories: Level B
(e) dampers or louvers with electric actuators c accessories: Level B

Copyright ASME International
Provided by IHS under license with ASME
No reproduction or networking permitted without license from IHS
Not for Resale

ARTICLE DA-8000
QUALITY ASSURANCE

Quality assurance of dampers and louvers shall be in accordance with the requirements of Section DA and Article AA-8000.

DA-8100 DAMPER AND LOUVER PERFORMANCE

Documentation shall be established to verify that damper and louver performance complies with the testing criteria of Article DA-5000.

DA-8300 QUALITY ASSURANCE RECORDS

Documentation shall be prepared, maintained, and submitted to the Owner for record in accordance with the requirements of Article DA-9000.

Copyright ASME International
Provided by IHS under license with ASME
No reproduction or networking permitted without license from IHS
Not for Resale

ARTICLE DA-9000
NAMEPLATES, STAMPINGS, AND MANUALS

Article AA-9000 requirements for nameplates, stampings, and manuals shall apply, except that the nameplate shall require only the following information:

(a) Manufacturer's name

(b) equipment, tag, or mark number information as supplied by the purchaser

(c) size

DA-9100 NAMEPLATES AND STAMPINGS

In those instances when the damper or louver assembly consists of several frames which may be independently removable, each such frame shall be required piece part markings.

Actuators and accessories included in the assembl shall be marked with the name of the Manufacture or a distinctive marking, which may be in code, b which it is identified as a product of a particula Manufacturer.

DA-9200 MANUALS

The Manufacturer shall provide a manual or manua for the equipment furnished. The manual shall includ a recommended spare parts list and recommended insta lation, maintenance, and operational procedures.

Copyright ASME International
Provided by IHS under license with ASME
No reproduction or networking permitted without license from IHS
Not for Resale

MANDATORY APPENDIX DA-I

FRAME LEAKAGE

TABLE DA-I-1000
MAXIMUM PERMISSIBLE SEAT LEAKAGE RATE, scfm, OF DAMPER OR ADJUSTABLE LOUVER FACE AREA AT 1 in. wg DIFFERENTIAL PRESSURE

Damper Blade Length or Diameter, in.	Leakage Class (Zero Leakage)	Leakage Class I (Low Leakage)	Leakage Class II (Moderate Leakage)	Leakage Class III (Normal Leakage)	Leakage (Class IV)
Up to 12	Note (1)	Note (2)	15	60	Note (3)
Up to 24	Note (1)	Note (2)	10	40	Note (3)
Up to 36	Note (1)	Note (2)	8	32	Note (3)
Up to 48	Note (1)	Note (2)	8	32	Note (3)
Up to 60	Note (1)	Note (2)	6	27	Note (3)
Up to 72	Note (1)	Note (2)	5	25	Note (3)

GENERAL NOTES:

(a) Maximum frame leakage rate classes (at frame design pressure) are: Class A — bubble tight; Class B — 1 cfm total leakage; Class C — no consideration.

(b) The total maximum permissible leak rate is determined by multiplying the above quantities by the damper area (in square feet) times the square root of the specified blade design pressure (in inches water gage).

NOTES:

(1) Leakage shall be zero as determined by the bubble method damper leakage test of this Code.

(2) Low Leakage is 1 scfm/ft^2 or 1 scfm, whichever is the largest at the blade design pressure (in inches water gage).

(3) Leakage Class IV is for applications where leakage is of no consideration.

Copyright ASME International
Provided by IHS under license with ASME
No reproduction or networking permitted without license from IHS
Not for Resale

MANDATORY APPENDIX DA-II
DAMPER AND LOUVER CONFIGURATIONS

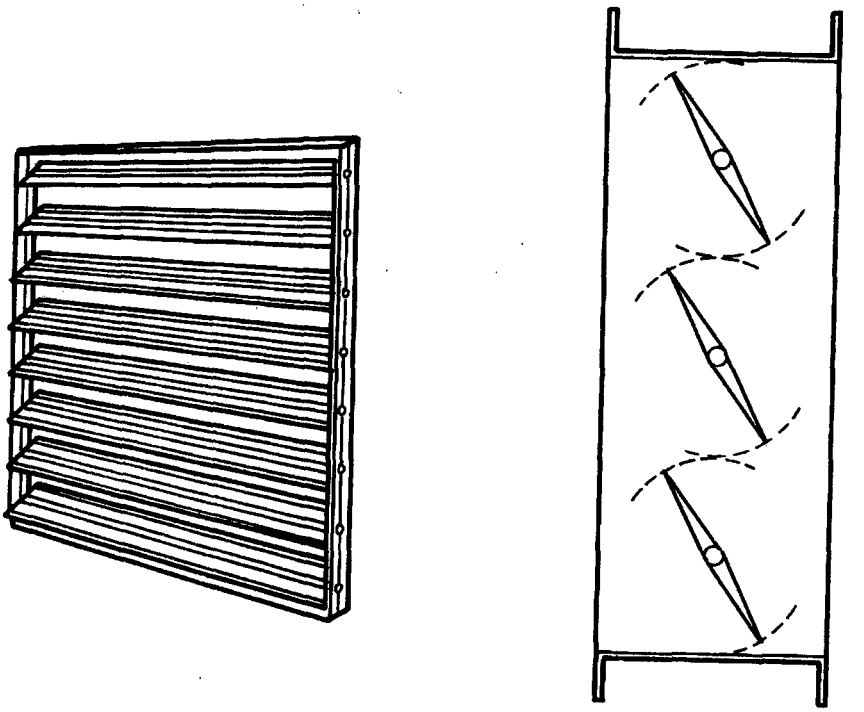

Centrally Pivoted Blades

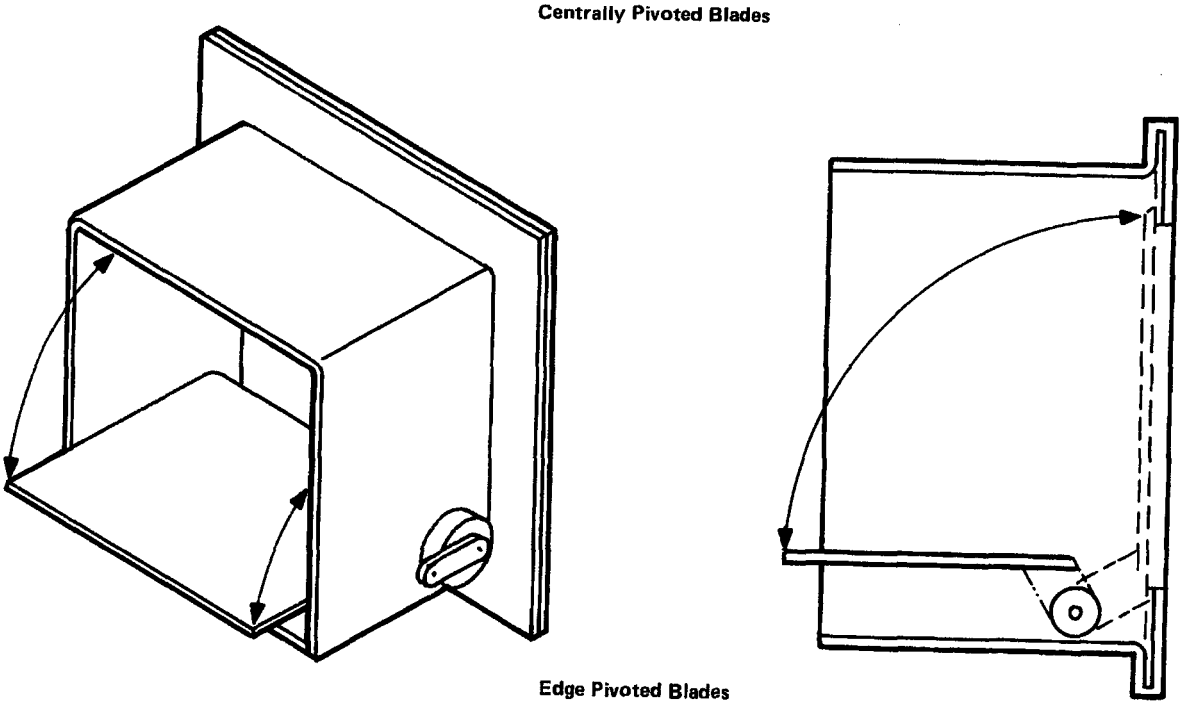

Edge Pivoted Blades

FIG. DA-II-1000-1 PARALLEL BLADE DAMPER

Copyright ASME International
Provided by IHS under license with ASME
No reproduction or networking permitted without license from IHS
Not for Resale

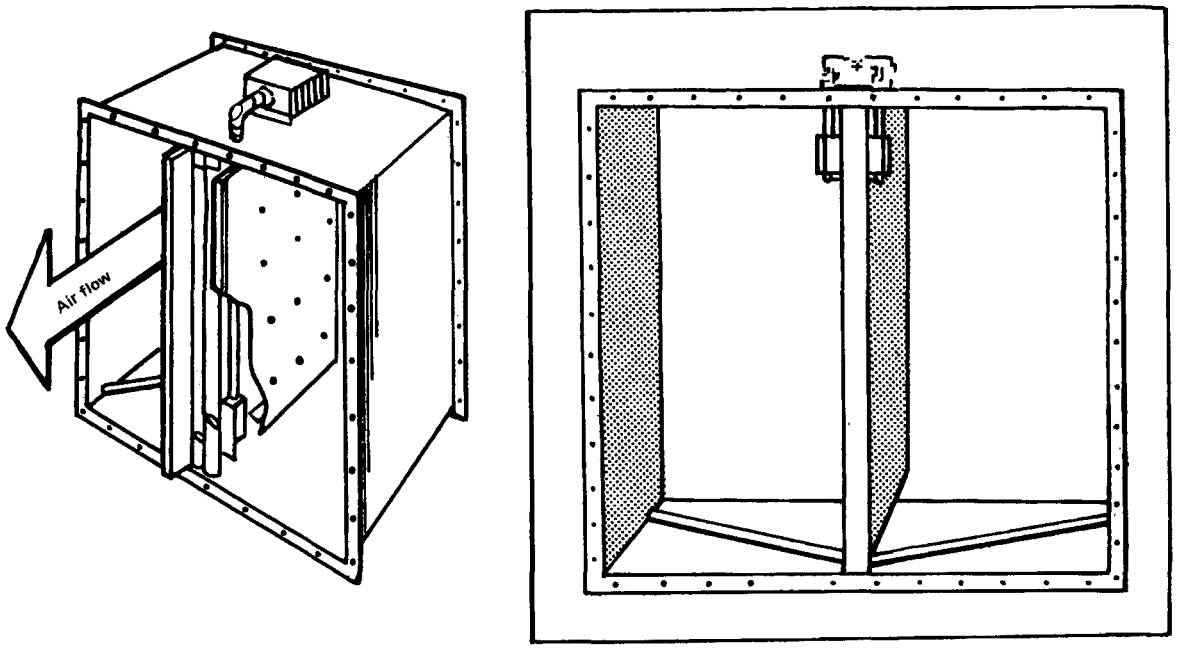

Wing Blade Damper

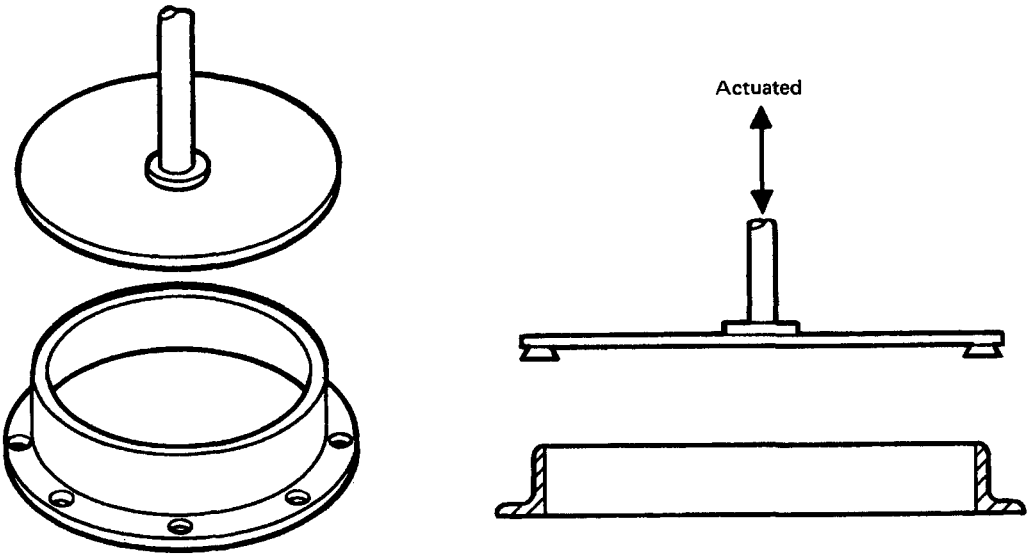

Poppet Damper

FIG. DA-II-1000-2

Copyright ASME International
Provided by IHS under license with ASME
No reproduction or networking permitted without license from IHS
Not for Resale

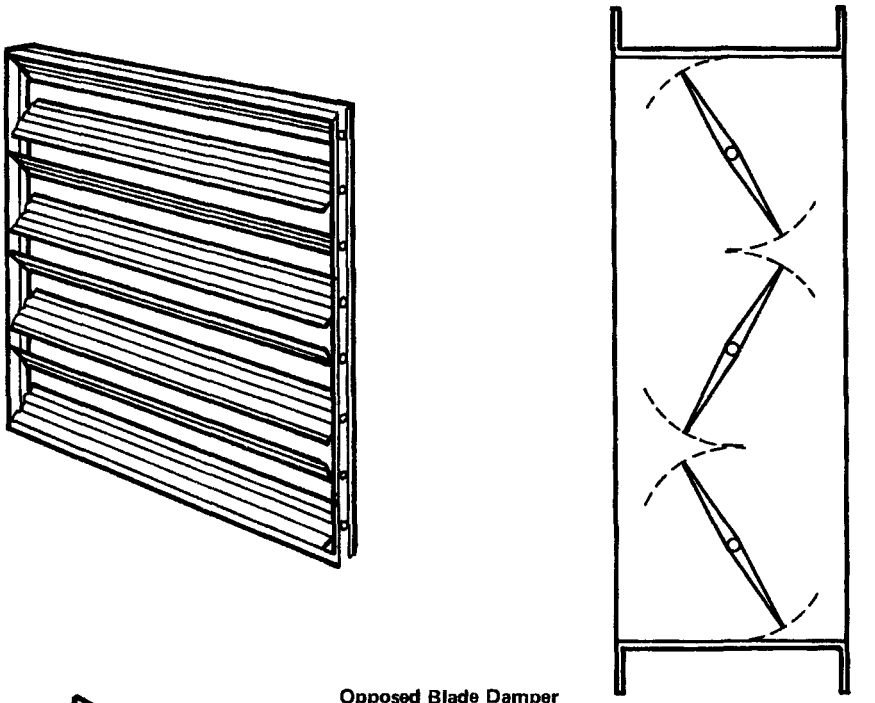

Opposed Blade Damper

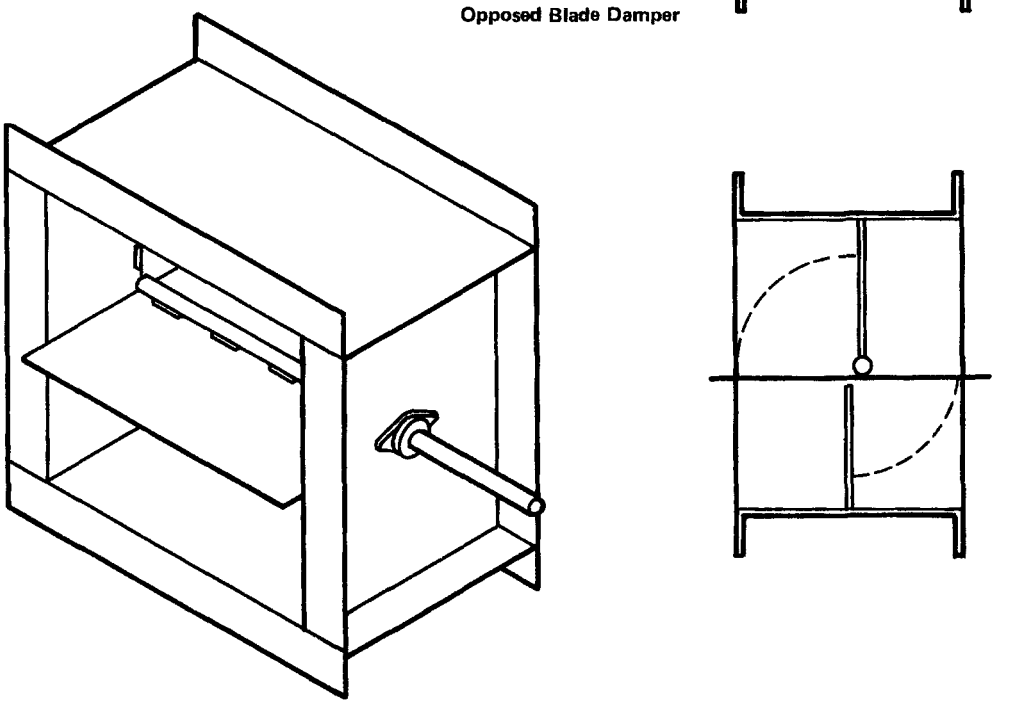

Single-Blade Damper

FIG. DA-II-1000-3

Copyright ASME International
Provided by IHS under license with ASME
No reproduction or networking permitted without license from IHS
Not for Resale

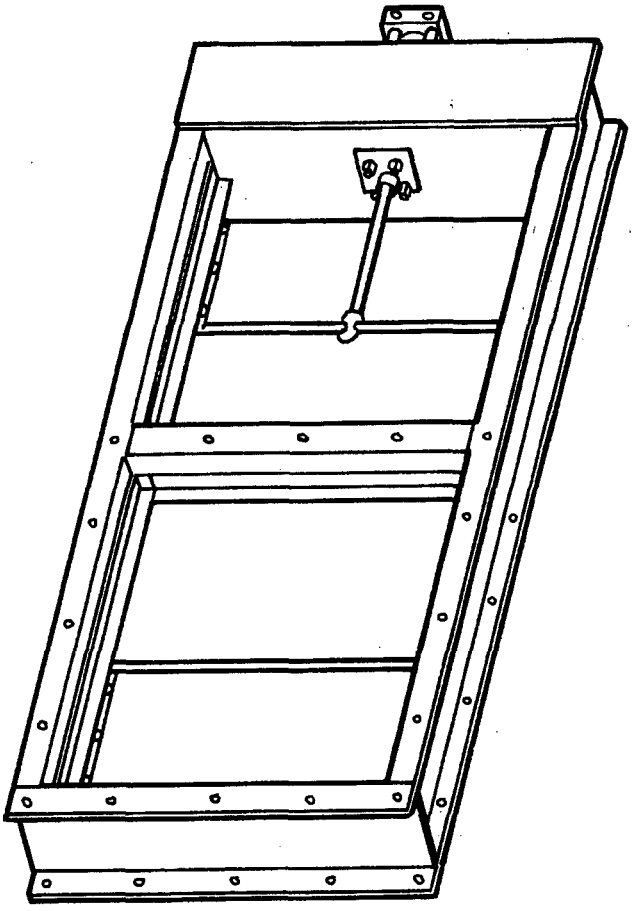

FIG. DA-II-1000-4 SLIDE GATE GUILLOTINE DAMPER

Copyright ASME International
Provided by IHS under license with ASME
No reproduction or networking permitted without license from IHS
Not for Resale

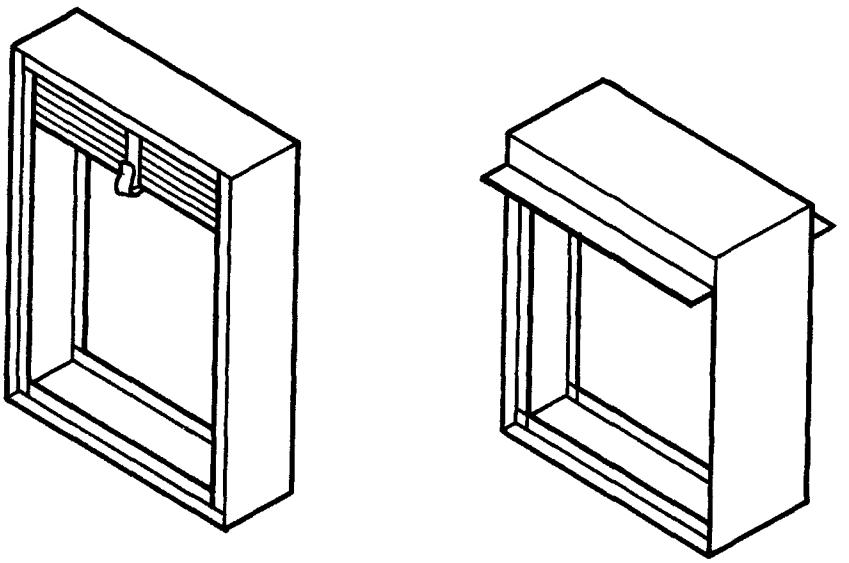

Curtain Type Damper

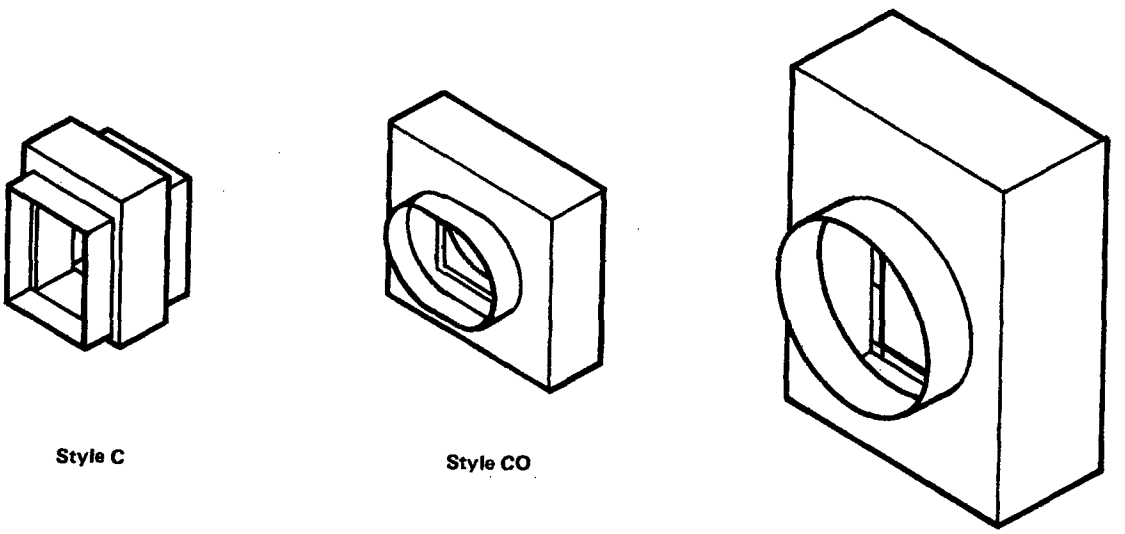

Style C

Style CO

Style CR

FIG. DA-II-1000-5

Copyright ASME International
Provided by IHS under license with ASME
No reproduction or networking permitted without license from IHS
Not for Resale

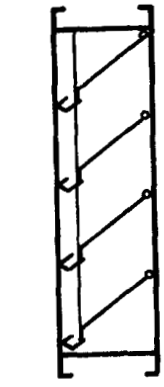

Fixed Blade Drainable

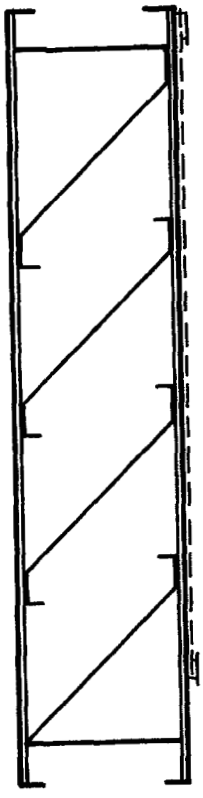

Fixed Blade
"J" Blade

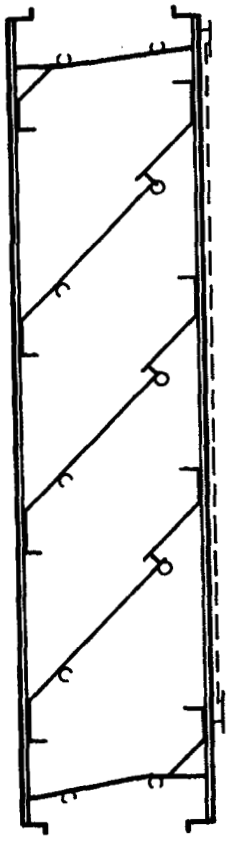

Fixed Blade
"K" Blade

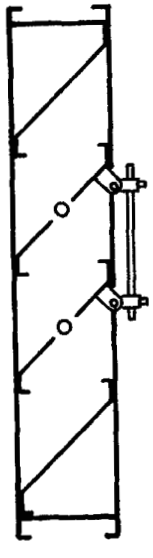

Movable Blade

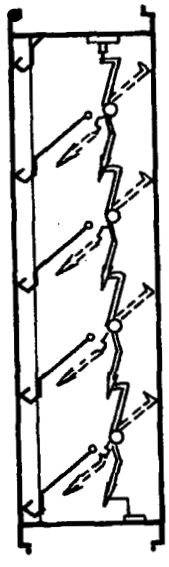

Combination Fixed Front Blade
and Movable Back Blades

FIG. DA-II-1000-6

Copyright ASME International
Provided by IHS under license with ASME
No reproduction or networking permitted without license from IHS
Not for Resale

NONMANDATORY APPENDIX DA-A
DIVISION OF RESPONSIBILITY

This Nonmandatory Appendix is intended to identify the roles normally assumed by the organizations responsible for fulfilling Code requirements when not specifically addressed in an article or subarticle. These are guidelines to assist with Code compliance and are not to be construed as legal or contractual responsibilities unless so invoked by the owner or designee.

TABLE DA-A-1000
DIVISION OF RESPONSIBILITY

DA-	Item	Responsibility
3211	(a) Fire hazard	Owner or designee
	(b) Reduction of properties	Manufacturer
3212	Galvanic corrosion	Owner or designee
	(a) With interface	Owner or designee
	(b) With components	Manufacturer
3213	Prohibition of zinc and aluminum	Owner or designee
3220(a)	Fire hazard	Owner or designee
(b)	Degradation of properties	Manufacturer
(c)	Maintainability	Manufacturer
3230	Environment conditions affecting material selection	Owner or designee
3300	(a) CMTR	Manufacturer
	(b) Allow certificate of conformance	Owner or designee
4110(b)	Damper function	Owner or designee
(c)	Damper configuration	Owner or designee
(d)	Allowable leakage	Owner or designee
(e)	Design pressures	Owner or designee
(f)	Design temperatures	Owner or designee
(g)	Volume flow rate	Owner or designee
(h)	Relative humidity	Owner or designee
(i)	Design pressure loss	Owner or designee
(j)	Entrained contaminants	Owner or designee
(k)	(a) Normal blade position	Owner or designee
	(b) Failsafe position	Owner or designee
(l)	Dimension and space for installation	Owner or designee
(m)	Mounting configuration and support	Owner or designee
(n)	Orientation and direction of airflow	Owner or designee
(o)	Blade orientation	Owner or designee
(p)	Operating time	Owner or designee
(q)	Actuator data	Owner or designee
(r)	Seismic requirements	Owner or designee
(s)	Allowable materials	Owner or designee
(t)	Special requirements	Owner or designee
(u)	Accessories required and mounting	Owner or designee
(v)	Loads, other than pressure loads	Owner or designee
(w)	Loading combinations and design transients	Owner or designee
(x)	Radiation dose rate	Owner or designee
(y)	Finish and coating requirements	Owner or designee
(z)	Fire resistance rating	Owner or designee

Copyright ASME International
Provided by IHS under license with ASME
No reproduction or networking permitted without license from IHS
Not for Resale

TABLE DA-A-1000
DIVISION OF RESPONSIBILITY (CONT'D)

DA-	Item	Responsibility
4120(a)	Mounting connection details	Manufacturer
(b)	Weight and center of gravity	Manufacturer
(c)	Service connections	Manufacturer
(d)	Pressure loss at rated flow	Manufacturer
(e)	Leakage	Manufacturer
(f)	Operating time	Manufacturer
(g)	Materials of construction	Manufacturer
(h)	Bearing design life	Manufacturer
(i)	Seal design life	Manufacturer
(j)	Actuator torque	Manufacturer
(k)	Damper torque	Manufacturer
(l)	Actuator qualifications	Manufacturer
(m)	Verification reports	Manufacturer
(n)	Fire resistance rating	Manufacturer
4130	Gastight construction requirements	Owner or designee
4212	Damper/support boundary interface	Manufacturer
(a)	DVSR	Manufacturer
(b)	DVTP and DVTR	Manufacturer
(c)	CVCER	Manufacturer
4220	Thermal expansion clearances	Manfacturer
4240	Requirement for interconnecting wiring and interfaces	Owner or designee
4315(a)	Actuator function	Owner or designee
(b)	Actuator power source	Owner or designee
(c)	Control signal characteristics	Owner or designee
(d)	Time for operation	Owner or designee
(e)	Frequency of operation	Owner or designee
(f)	Environmental conditions	Owner or designee
(g)	Mounting location and space limitations	Owner or designee
(h)	Normal override requirements	Owner or designee
(i)	Accumulator sizing	Owner or designee
(j)	Qualification requirements	Owner or designee
4410	Requirement for accessories	Owner or designee
4420	Requirement for auxiliary energy source	Owner or designee
4430	Requirement for positioner	Owner or designee
4450	Qualification standard for electrical devices	Owner or designee
5100	Requirement for test	Owner or designee
5142	Approval of alternate test method	Owner or designee
6000	(a) Finishing of materials	Owner or designee
	(b) Structural support for dampers	Owner or designee
6100	Welding requirements	Owner or designee

Copyright ASME International
Provided by IHS under license with ASME
No reproduction or networking permitted without license from IHS
Not for Resale

SECTION SA
DUCTWORK

SA-1000	**Introduction**	145
SA-1100	Scope	145
SA-2000	**Referenced Documents**	148
SA-3000	**Materials**	149
SA-3100	General	149
SA-3200	Material Substitution	149
SA-3300	Material Testing	149
SA-3400	Material Specifications	149
SA-4000	**Design**	153
SA-4100	General	153
SA-4200	Design Criteria	153
SA-4300	Ductwork Joints and Seams	156
SA-4400	Components	156
SA-4500	Pressure Boundary Leakage	158
SA-4600	Design Specification	159
SA-5000	**Inspection and Testing**	160
SA-5100	General	160
SA-5200	Visual Inspection	160
SA-5300	Pressure Boundary Leakage Testing	161
SA-5400	Structural Capability Tests	162
SA-6000	**Fabrication and Installation**	163
SA-6100	General	163
SA-6200	Fabrication Process	163
SA-6300	Mechanical Fastening	164
SA-6400	Fabrication Tolerances	164
SA-6500	Installation Tolerances	164
SA-6600	Cleaning, Finishing, and Coating	164
SA-7000	**Packaging, Shipping, Receiving, Storage, and Handling**	168
SA-7100	General	168

Copyright ASME International
Provided by IHS under license with ASME
No reproduction or networking permitted without license from IHS
Not for Resale

SA-7200 Packaging 168
SA-7300 Shipping 168
SA-7400 Receiving 168
SA-7500 Storage 168

SA-8000 Quality Assurance 170
SA-8100 General 170
SA-8200 Material Identification 170
SA-8300 Drawings and Documentation 170

SA-9000 Nameplates and Stamping 171
SA-9100 General 171

Figure
SA-1120 Ductwork and Ductwork Support — Interface Boundary 147

Tables
SA-3400 Allowable Materials 150
SA-4212 Load Combinations 154
SA-4216 Load Combinations for Supports 154
SA-6410-1 Rectangular Ducts: Maximum Allowable Tolerances 165
SA-6410-2 Circular Ducts: Maximum Allowable Tolerances 166
SA-6410-3 Flatness of Surface: Maximum Allowable Waviness Tolerance 167

Nonmandatory Appendices
SA-A Division of Responsibility 172
SA-B Procedures to Determine Allowable Leakage for Ductwork 174
SA-C Additional Guidelines for Duct Design and Construction 190

Copyright ASME International
Provided by IHS under license with ASME
No reproduction or networking permitted without license from IHS
Not for Resale

ARTICLE SA-1000
INTRODUCTION

SA-1100 SCOPE

This section provides requirements for the performance, design, construction, inspection, shop and field fabrication acceptance testing, and quality assurance for ductwork, including ductwork accessories, ductwork supports, and duct-mounted equipment supports, used in nuclear safety-related air treatment systems in nuclear facilities.

SA-1110 PURPOSE

This section establishes requirements for ductwork and ductwork supports to ensure system performance and reliability under all required conditions of operation and postulated events.

SA-1120 APPLICABILITY

This section applies only to ductwork and accessories, plenums, and ductwork supports. It does not cover sizing of complete air handling systems or any operating characteristics of such systems. Ductwork interface points, as applied to this section, are shown in Fig. SA-1120.

SA-1130 DEFINITIONS AND TERMS

The definitions and terms described below are specific to this section. For other definitions and terms, see subsubarticle AA-1130.

accessories: components of a duct system which are required to make the system operate in accordance with design such as turning vanes, diffusers, and gaskets.

construction documents: the drawings, specifications, installation instructions, procedures, and engineering support data produced by an engineering service organization, constructor, supplier, or contractor that are issued to the field for installation and which define the design of, or modification to, systems, structures, or components.

damper, splitter: a manually positioned single-blade damper located at duct branch connections for diverting airflow into the branch duct.

diffuser: a circular, square or rectangular air distribution outlet comprised of deflecting members discharging supply air in one or more directions and planes and arranged to promote mixing of supply air with room air.

ductwork: accessories, ducts, and plenums required to convey air from one or more intake points through one or any combination of air supply, treatment and/or conditioning equipment to one or more points of discharge.

ductwork supports: external structural members used to transmit loads between the ductwork and the designated load bearing structure.

extractor: a multivaned device located at duct branch and duct diffuser collar outlets for diverting airflow.

grille: a louvered or perforated device for transferring or directing airflow, or both.

insulation, acoustic: a material typically attached to the internal duct surface which has sound attenuating properties.

insulation, external: a material attached to the external duct surface which has heat transfer resisting properties.

insulation, internal: a material attached to the internal duct surface which has heat transfer resisting properties.

leak test pressure: the static pressure, acting in the direction of the operating pressure (positive or negative), used for establishing leakage rates. This pressure usually equals or exceeds the highest operating pressure of the item being tested but does not exceed structural capability pressure.

maximum design pressure: the static pressure to which ductwork may be subjected and required to remain intact and which is used as the starting point for structural design. This pressure shall equal or exceed

Copyright ASME International
Provided by IHS under license with ASME
No reproduction or networking permitted without license from IHS
Not for Resale

the maximum operating pressure and/or test pressure, whichever is greater.

maximum operating pressure: the maximum static pressure to which the ductwork will be subjected and still be required to continue its function. Static pressure resulting from off-normal operating conditions which do not render the system inoperable (e.g., closure of branch dampers or registers) shall be considered as maximum operating pressure. The maximum operating pressure shall equal or exceed the normal operating pressure and may be equal to the maximum design pressure but may not exceed it.

normal operating pressure: the static pressure that corresponds to the normal design operating mode of the ductwork but does not include the static pressure which may be experienced in off-normal operating modes during which the system is required to continue to perform its function.

panel: a pressure boundary member of ductwork.

register: a combination of grille and damper assembly, covering an opening located in the side-wall, ceiling, floor, or duct.

silencer: a sound control device that provides acoustical attenuation.

structural capability pressure: the static pressure to which the ductwork can be safely loaded without permanent distortion. This pressure may exceed the system operational pressure transient (SOPT) due to inclusion of a margin of safety.

Copyright ASME International
Provided by IHS under license with ASME
No reproduction or networking permitted without license from IHS
Not for Resale

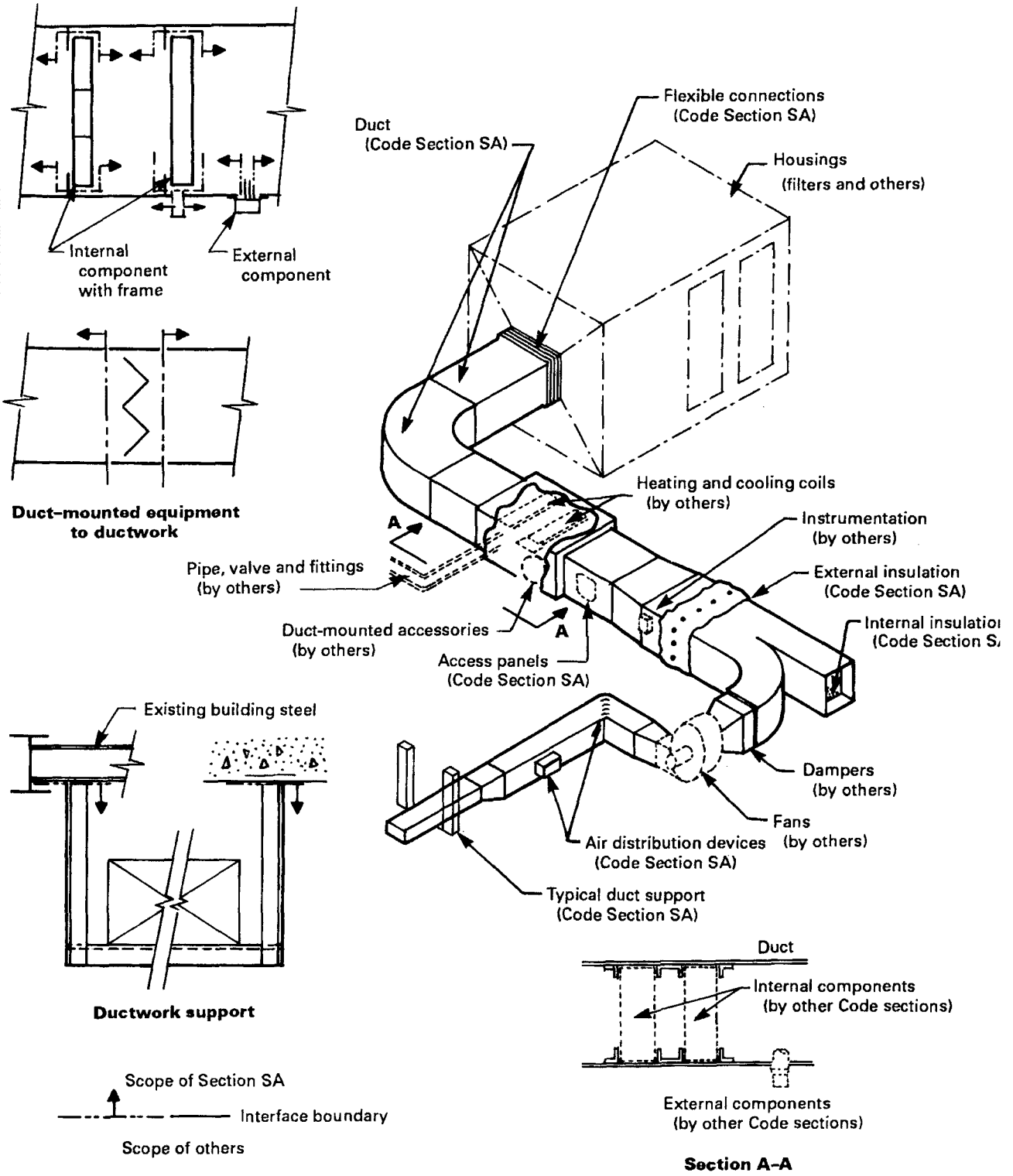

FIG. SA-1120 DUCTWORK AND DUCTWORK SUPPORT — INTERFACE BOUNDARY

Copyright ASME International
Provided by IHS under license with ASME
No reproduction or networking permitted without license from IHS
Not for Resale

ARTICLE SA-2000
REFERENCED DOCUMENTS

The codes and standards listed below shall supplement those listed in Section AA.

ANSI/ANS 3.3 (1980), Security for Nuclear Power Plants

Publisher: American National Standards Institute (ANSI), 25 West 43rd Street, New York, NY 10036/American Nuclear Society (ANS), 555 North Kensington Avenue, LaGrange Park, IL 60526

Certifications, Rating, and Test Manual 1062 Series, Revision 4 (1977)

Publisher: Air Diffusion Council (ADC), 1000 East Woodfield Road, Schaumburg, IL 60173-5921

Cold Formed Steel Design Manual, Specification for the Design of Cold Steel Structural Members (1986)

Publisher: American Iron and Steel Institute (AISI), 200 Town Center, Southfield, MI 48075

Handbook of Fundamentals, 1989

Publisher: American Society of Heating, Refrigeration, and Air Conditioning Engineers, Inc. (ASHRAE), 1791 Tullie Circle, NE, Atlanta, GA 30329

Industrial Ventilation, 20th Edition, 1988

Publisher: American Conference of Governmental Industrial Hygienists, Inc. (ACGIH), 1330 Kemper Meadow Drive, Cincinnati, OH 45240

National Fire Codes, 1991 Edition

Publisher: National Fire Protection Association (NFPA), 1 Batterymarch Park, Quincy, MA 02269-9101

Rectangular Industrial Duct Construction Standards, 1980

Round Industrial Duct Construction Standards, 1975

HVAC Duct Construction Standards, 1985

Publisher: Sheet Metal and Air-Conditioning Contractors' National Association, Inc. (SMACNA), 4201 Lafayette Center Drive, Chantilly, VA 20151-1209

Specification for the Design, Fabrication and Erection of Structural Steel for Buildings, Ninth Edition

Publisher: American Institute of Steel Construction (AISC), One East Wacker Drive, Chicago, IL 60601-2001

Standard 201 (1985) Fan Application Manual — Fans and Systems

Publisher: Air Movement and Control Association International, Inc. (AMCA), 30 West University Drive, Arlington Heights, IL 60004-1893

Title 10 CFR Part 20, Standards for Protection Against Radiation

Title 10 CFR Part 50, Domestic Licensing of Production and Utilization Facilities

Publisher: U.S. Nuclear Regulatory Commission (NRC), One White Flint North, 11555 Rockville Pike, Rockville, MD 20852

Copyright ASME International
Provided by IHS under license with ASME
No reproduction or networking permitted without license from IHS
Not for Resale

ARTICLE SA-3000
MATERIALS

SA-3100 GENERAL

For components of ductwork and ductwork supports, the supplier shall make available, as a minimum, certified test reports of chemical and physical properties. For those ASTM materials which do not have physical testing required by the ASTM specification, tensile testing shall be performed per ASTM A370.

All other components used in the construction of ductwork shall be provided with a manufacturer's Certificate of Compliance covering the ASME, ASTM, or other material specification, grade, and class, if applicable.

SA-3200 MATERIAL SUBSTITUTION

Measures shall be established for controlling and identifying material substitutions throughout the manufacturing and installation process.

SA-3300 MATERIAL TESTING

When required by the design specification, material shall be tested in accordance with the applicable material specification. Supplemental material testing, when required, shall be performed in accordance with Article AA-3000.

SA-3400 MATERIAL SPECIFICATIONS

Material for ductwork and ductwork supports shall be capable of meeting all requirements of Article SA-4000. Materials shall be in conformance with the ASTM materials listed in Table SA-3400. Substitute materials shall be equivalent, or exceed the requirements of Table SA-3400, as determined by the Engineer. Materials selected shall be evaluated for suitability with service conditions and compatibility with other materials used in duct construction.

The ASTM numbers in Table SA-3400 designate a chemical composition and a material thickness limit. A grade designation is usually required to determine the minimum strength of the material. If the specific grade material has an assigned minimum yield and tensile strength, these values shall be used for design purposes. If values have not been established and assigned, then tests in accordance with the procedures outlined in Article AA-3000 shall be performed to ensure that the strength of the material meets the required design stress values.

Material listed in Table SA-3400 under "Carbon Steel Plates and Sheets" when coated in accordance with "Zinc Coatings," shall be allowable under "Galvanized Steel Plates and Sheets." Materials listed under "Carbon Steel Structural Members" and "Carbon Steel Bolts and Nuts" shall be coated in accordance with "Zinc Coatings" when used in conjunction with materials listed under "Galvanized Steel Plates and Sheets."

Copyright ASME International
Provided by IHS under license with ASME
No reproduction or networking permitted without license from IHS
Not for Resale

TABLE SA-3400
ALLOWABLE MATERIALS

ASME Designator	ASTM Designator	Publication Title
Carbon Steel Plates and Sheets		
...	A 283	Standard Specification for Low- and Intermediate-Tensile Strength Carbon Steel Plates
...	A 284	Standard Specification for Low- and Intermediate-Tensile Strength, Carbon-Silicon Steel Plates for Machine Parts and General Construction
...	A 366	Standard Specification for Steel Sheet, Carbon, Cold-Rolled Commercial Quality
SA-414	A 414	Standard Specification for Steel Sheet, Carbon, for Pressure Vessels
...	A 568	Standard Specification for Steel Sheet, Carbon, and High-Strength Low-Alloy Hot-Rolled, and Cold-Rolled, General Requirements
...	A 569	Standard Specification for Steel, Carbon (0.15 Maximum, Percent), Hot-Rolled Sheet and Strip, Commercial Quality
...	A 570	Standard Specification for Steel Sheet and Strip, Carbon, Hot-Rolled Structural Quality
...	A 611	Standard Specification for Steel Sheet, Carbon, Cold-Rolled Structural
SA-620	A 620	Standard Specification for Steel Sheet, Carbon, Drawing Quality, Special Kilned, Cold-Rolled
...	A 621	Standard Specification for Steel Sheet, Carbon, Hot-Rolled, Drawing Quality
...	A 635	Standard Specification for Steel Sheet and Strip, Commercial Quality, Heavy-Thickness Coils, Carbon, Hot-Rolled
...	A 659	Standard Specification for Steel, Carbon (0.16 Minimum to 0.25 Maximum Percent), Hot-Rolled Sheet and Strip, Commercial Quality
SA-36	A 36	Standard Specification for Structural Steel
Stainless Steel Plates and Sheets		
...	A 167	Standard Specification for Stainless and Heat-Resisting Chromium-nickel Steel Plate, Sheet, and Strip
SA-240	A 240	Standard Specification for Heat-Resisting Chromium and Chromium-nickel Stainless Steel Plate, Sheet, and Strip for Pressure Vessels
...	A 666	Standard Specification for Austenitic Stainless Steel Sheet, Strip, Plate, and Flat Bar
Galvanized Steel Plates and Sheets		
...	A 446	Standard Specification for Steel Sheet, Zinc-Coated (Galvanized) by the Hot-Dip Process Structural (Physical) Quality
...	A 525	Standard Specification for General Requirements for Steel Sheet, Zinc-Coated (Galvanized) by the Hot-Dip Process
...	A 526	Standard Specification for Steel Sheet, Zinc-Coated (Galvanized) by the Hot-Dip Process, Commercial Quality
...	A 527	Standard Specification for Steel Sheet, Zinc-Coated (Galvanized) by the Hot-Dip Process, Lock-Form Quality
...	A 528	Standard Specification for Steel Sheet, Zinc-Coated (Galvanized) by the Hot-Dip Process, Drawing Quality
...	A 591	Standard Specification for Steel Sheet, Electrolytic Zinc-Coated, for Light Coating Mass Applications
...	A 642	Standard Specification for Steel Sheet, Zinc-Coated (Galvanized) by the Hot-Dip Process, Drawing Quality, Special Kilned

Copyright ASME International
Provided by IHS under license with ASME
No reproduction or networking permitted without license from IHS
Not for Resale

TABLE SA-3400
ALLOWABLE MATERIALS (CONT'D)

ASME Designator	ASTM Designator	Publication Title
Carbon Steel Structural Members		
SA-36	A 36	Standard Specification for Structural Steel
...	A 106	Standard Specification for Seamless Carbon Steel Pipe for High-Temperature Service
...	A 108	Standard Specification for Steel Bars, Carbon, Cold-Finished, Standard Quality
...	A 500	Standard Specification for Cold-Formed Welded and Seamless Carbon Steel Structural Tubing in Rounds and Shapes
...	A 501	Standard Specification for Hot-Formed Welded and Seamless Carbon Steel Structural Tubing
...	A 575	Standard Specification for Steel Bars, Carbon, Merchant Quality, M-grades
...	A 576	Standard Specification for Steel Bars, Carbon, Hot-Wrought, Special Quality
Stainless Steel Structural Members		
...	A 276	Standard Specification for Stainless and Heat-Resisting Steel Bars and Shapes
SA-312	A 312	Standard Specification for Seamless and Welded Austenitic Stainless Steel Pipes
SA-476	A 479	Standard Specification for Stainless and Heat-Resisting Steel Bars, and Shapes for Use in Boilers and Other Pressure Vessels
...	A 511	Standard Specification for Seamless Stainless Steel Mechanical Tubing
...	A 554	Standard Specification for Welded Stainless Steel Mechanical Tubing
Galvanized Steel Pipe and Conduit		
...	A 53	Standard Specification for Pipe, Steel, Black and Hot-Dipped, Zinc-Coated, Welded and Seamless
ANSI C80.3		Electrical Metallic Tubing, Zinc-Coated
Stainless Steel Bolts and Nuts		
SA-193	A 193	Standard Specification for Alloy-Steel and Stainless Steel Bolting Materials for High-Temperature Service
SA-194	A 194	Standard Specification for Carbon and Alloy-Steel Nuts for Bolts for High-Pressure and High-Temperature Service
...	A 320	Standard Specification for Alloy-Steel Bolting Materials for Low-Temperature Service
...	A 493	Standard Specification for Stainless and Heat-Resisting Steel for Cold Heading and Cold Forging
...	ANSI B18.21.1	Lockwashers (Inch series)
...	ANSI B18.22.1	Plain Washers

Copyright ASME International
Provided by IHS under license with ASME
No reproduction or networking permitted without license from IHS
Not for Resale

TABLE SA-3400
ALLOWABLE MATERIALS (CONT'D)

ASME Designator	ASTM Designator	Publication Title
Carbon Steel Bolts and Nuts		
SA-193	A 193	*Standard Specification for* Alloy-Steel and Stainless Steel Bolting Materials for High-Temperature Service
SA-194	A 194	Standard Specification for Carbon and Alloy-Steel Nuts for Bolts for High-Pressure and High-Temperature Service
SA-307	A 307	Standard Specification for Carbon Steel Bolts and Studs
SA-325	A 325	Standard Specification for High-Strength Bolts for Structural Steel Joints
SA-449	A 449	Standard Specification for Quenched and Tempered Steel Bolts and Studs
. . .	A 548	Standard Specification for Steel Wire, Carbon, Cold-Heading Quality, for Tapping and Sheet Metal Screws
. . .	A 563	Standard Specification for Carbon and Alloy-Steel, Steel Nuts
. . .	ANSI B18.21.1	*Lockwashers* (Inch Series)
. . .	ANSI B18.22.1	Plain Washers
Aluminum Material — Grilles, Registers, Diffusers		
. . .	B 209	Standard Specification for Aluminum and Aluminum Alloy Sheet and Plate
. . .	B 221	Standard Aluminum and Specification for Aluminum Alloy Extruded Bars, Rods, Wire, Shapes, and Tubes
SB-308	B 308	Standard Specification for Aluminum Alloy, 6061-T6 Standard Structural Shapes
Zinc Coatings		
. . .	A 123	Standard Specification for Zinc (Hot-Dip Galvanized) Coatings on Iron and Steel Products
. . .	A 153	Standard Specification for Zinc Coating (Hot-Dip) on Iron and Steel Hardware
. . .	B 633	Standard Specification for Electro-deposited Coatings of Zinc on Iron and Steel

GENERAL NOTE: Unless specified otherwise, the effective date of specifications listed above is the latest approved revision. Where ASTM materials are specified, the equivalent ASME material specification may be substituted.

Copyright ASME International
Provided by IHS under license with ASME
No reproduction or networking permitted without license from IHS
Not for Resale

ARTICLE SA-4000
DESIGN

SA-4100 GENERAL

Ductwork and ductwork supports shall be designed in accordance with the requirements of Article AA-4000 and this section.

SA-4200 DESIGN CRITERIA

SA-4210 LOAD CRITERIA

SA-4211 Ductwork Loads

The following loads and load definitions shall be considered:

(a) Additional dynamic loads (ADL), deadweight (DW), design pressure differential (DPD), design wind (W), external loads (EL), normal operating pressure differential (NOPD), and system operational pressure transient (SOPT) as defined in AA-4211.

(b) Constraints of free end displacement load (T). These are loads caused by thermal movements. When duct construction utilizes gasketed companion angle construction, effects of (T) for normal operations may be ignored. For postulated accident conditions, a review of the effect of (T) is necessary.

(c) Fluid momentum load (FML). This is as defined in AA-4211 with the following clarification:

Ductwork shall be designed to withstand FM loads resulting from air turbulence, often found in sections following fan discharges, with or without fan accessories, and certain dampers and duct fittings. The termination of such sections is marked by the length of straight ductwork required to regain uniform airflow as given by AMCA 201 Fig. 20:

$$D_f = \frac{VD}{1000} \qquad \frac{(VD)}{(3281)}$$

for round and equivalent rectangular ducts

where

V = velocity, ft/min (m/sec)
D = duct diameter, ft (m)
D_f = length of straight ductwork connected to fan or component discharge, ft (m)

The equivalent diameter (D_e) for rectangular duct, with side dimensions of a and b, is given by:

$$D_e = 1.30\left[\frac{(ab)^{0.625}}{(a+b)^{0.25}}\right]$$

(d) Live load (L). Live loads shall be defined in the design specification (SA-4600). The live load shall not be less than a construction manload of 250 lb (113.4 kg). The load shall be applied at the mid-span of the duct, or midpoint of a stiffener, or within a panel. When applied to a panel, the load shall be assumed to be distributed over 10 in.^{2} (64.5 cm^2).

(e) Normal operating pressure differential (NOPD). This is as defined in para. AA-4211 with the following clarification: For ease of design, a duct system may be designed using one pressure value that envelops NOPD and SOPT (para. AA-4211). NOPD and SOPT may be positive or negative pressures. Worse case shall be considered in design.

(f) Seismic loads (SL). Loads that are the result of the envelope of the operating basis earthquake (OBE) and the safe shutdown earthquake (SSE). As overall system functionalism is not generally compromised by loads from the OBE, the SSE will govern the design. As an option, the OBE and SSE may be considered separately with the OBE loads used for the Level B load combination. The horizontal and vertical components of the seismic excitation shall be applied simultaneously in the direction that will produce worst-case stresses and deflections. These components may be combined by the square root of the sum of the squares (SRSS) method.

(g) Hydrostatic loads from accumulated condensate, water deluge systems, or moisture separators. The

Copyright ASME International
Provided by IHS under license with ASME
No reproduction or networking permitted without license from IHS
Not for Resale

hydrostatic load shall be conservatively established by documented analysis based on ductwork configuration, accessories, and component function. Hydrostatic load (HY) shall be added to the deadweight (DW) case as applicable.

(h) Design pressure differential (DPD). The dynamic external pressure loads resulting from a design basis accident (DBA), intermediate break accident (IBA), or small break accident (SBA). Generally, HVAC should be routed outside the local pipe break affected area. If HVAC is subjected to these loads, the design specification (SA-4600) shall address the station specific design requirements considering a Service Level D load combination.

(i) For component load criteria, see the following sections:

(1) HEPA filters: FC-4300
(2) Mounting frames: FG-4200
(3) Fans: Article BA-4000
(4) Dampers: Article DA-4000
(5) Refrigeration equipment: Article RA-4000
(6) Conditioning: Article CA-4000
(7) Moisture separators: Article FA-4000
(8) Prefilters: Article FB-4000
(9) Instrumentation: Article IA-4000

SA-4212 Ductwork Load Combinations

The applicable component loading shall be combined in accordance with Table SA-4212.

TABLE SA-4212
LOAD COMBINATIONS

Component Service Level	Load Combinations
A	DW + NOPD + FML + EL + L + T + W
B	Not required
C	DW + NOPD + FML + EL + SL + ADL + W
D	Not required unless DPD is applicable

SA-4213 Service Conditions

The requirements of AA-4213 apply.

SA-4214 Design and Service Limits

The requirements of AA-4214 apply.

SA-4215 Ductwork Support Loads

The definition of loads per SA-4211 for live load (L), normal operating pressure differential (NOPD), seismic load (SL) shall also be used for duct supports. The definition of loads per AA-4211 for dead weight (DW), external loads (EL) and additional dynamic loads (ADL) shall also be used for duct supports. Hydrostatic loads as defined in SA-4211(g) shall be treated as a DW load when the loads have an effect on the supports. The fluid momentum load as defined in SA-4211(c) is not typically a significant load for supports and may be neglected.

SA-4216 Ductwork Support Load Combinations

The applicable support loading shall be combined in accordance with Table SA-4216.

TABLE SA-4216
LOAD COMBINATIONS FOR SUPPORTS

Service Level	Load Combinations
A	DW + NOPD + EL + L + T
B	Not required
C	DW + NOPD + EL + SL + ADL
D	Not required unless DPD is applicable

SA-4220 STRESS CRITERIA

The ductwork stress shall be based upon the AISI *Specifications for the Design of Cold-Formed Steel Structural Members.* The ductwork support stress shall be based upon the AISC *Specification for the Design, Fabrication and Erection of Structural Steel for Buildings.*

The basic general membrane design stress for the Service Level A condition shall not exceed 0.6 *Fy* and shall be reduced as appropriate to consider lateral-torsional buckling of bending members and effective lengths of compression members. The basic general membrane design stress for the Level C condition shall not exceed 1.2 × 0.6 *Fy* per AA-4321.

The combined membrane and bending design stress for Service Level C shall not exceed 0.9 *Fy* and shall be reduced as appropriate to consider lateral-torsional buckling of bending members and effective lengths of compression members. The combined membrane and

Copyright ASME International
Provided by IHS under license with ASME
No reproduction or networking permitted without license from IHS
Not for Resale

bending design stress for the Level A condition shall not exceed 1.8 × 0.6 *Fy* per AA-4321.

SA-4230 DEFLECTION CRITERIA

SA-4231 Deflection Limits

The maximum deflection ($d_{max.}$), that may be sustained so that the duct function is not impaired shall be determined by analysis, test or both. The allowable deflections are as defined in AA-4231 for various service level conditions.

SA-4232 Deflection Limits for Panels, Flanges, and Stiffeners

The maximum deflection (*d*), which occurs as the result of the applicable load combinations of SA-4212 is the lesser of two values derived from SA-4232.1 and SA-4232.2.

SA-4232.1 Criterion No. 1. Deflection shall not exceed the following criteria:

(a) Plate or sheet: $\frac{1}{8}$ in. per foot of the maximum unsupported panel span in direction of airflow but not more than $\frac{3}{4}$ in.

(b) Stiffeners and flange connections: Not to exceed $\frac{1}{8}$ in. per foot of span but not more than $\frac{3}{4}$ in.

(c) Flange connection to components: $\frac{1}{360}$ of the span but not to exceed $\frac{1}{8}$ in.

SA-4232.2 Criterion No. 2. Deflections shall be limited to assure that the following will not occur:

(a) Distortion of airflow path cross section in excess of tolerances specified in SA-6400.

(b) Damage to safety related items such as instrumentation or accessories.

(c) Impingement of deflected elements on adjacent services, such as equipment, pipe, cables, tubing, etc.

(d) Loss of leak-tightness (in excess of leakage limit. See SA-4500.

(e) Functional failure of components attached to the duct (e.g., instrument lines).

SA-4233 Deflection Limits for Mounting Frames and Equipment Interfaces

(a) See FG-4310 for mounting frame deflection limits.

(b) See applicable equipment section for other deflection limits.

SA-4240 OTHER CRITERIA

SA-4241 Vibration Isolation

The vibration isolation type and efficiencies, primarily between duct and equipment, shall be as designated in the design specification. The vibration isolation equipment shall be designed with restraints to resist the loads generated under any service condition.

SA-4242 Provisions for Relative Movement

Clearances shall be provided to allow for the relative motion between equipment, ductwork, and supports. When clearances or travel ranges or both are required to accommodate movements of ductwork or supports, design margins shall be introduced to allow for variations due to fabrication and installation. Design clearances and travel ranges shall be based on the maximum range that might occur between two operating conditions and not necessarily the maximum cold-to-hot range. All parts of supports shall be fabricated and assembled so that they will not be disengaged by the movements of ductwork.

SA-4243 Tolerances

Installation and fabrication tolerances for ductwork shall be accounted for in the design of the ductwork and supports. Fabrication tolerances shall comply with SA-6400.

SA-4244 Permanent Attachments

The attachment design shall include all service conditions and load combinations set forth in SA-4212 and SA-4213, or as required by the design specification.

The permissible types of welded joints shall be in accordance with AWS D1.1, or AWS D1.3, as applicable.

Attachments may be either the welded or bolted type and shall be considered as indicated in SA-4244.1 and SA-4244.2.

SA-4244.1 Welded Attachments. Consideration shall be given to local stresses induced in the ductwork by integral attachments as defined in AA-4243.

For items used as part of an assembly for the support or guiding of the ductwork, the materials shall be compatible for welding, see Article AA-6000.

SA-4244.2 Bolted Attachments. Consideration shall be given to the mechanical connection and local stresses induced in the ductwork by nonintegral attachments as defined in AA-4243.

Copyright ASME International
Provided by IHS under license with ASME
No reproduction or networking permitted without license from IHS
Not for Resale

The design of bolts for structural supports shall meet the requirements of AA-4360.

SA-4300 DUCTWORK JOINTS AND SEAMS

SA-4310 GENERAL

Selection of joints and seams used in the assembly of ductwork sections shall be based on the required structural integrity, leak-tightness, and the fluid flow within the system. Duct-housing interconnections shall be designed with consideration of the air distribution uniformity.

SA-4320 DUCT JOINTS AND SEAMS

SA-4321 Longitudinal Seams

The following longitudinal seams are acceptable for use in ductwork sections subject to the limitations of SA-4324.

(a) groove weld
(b) lock type
(c) Pittsburgh lock
(d) fillet weld

SA-4322 Transverse Joints

The following types of transverse joints are acceptable for use in ductwork sections:

(a) welded flange
(b) companion angle
(c) Vanstone flange
(d) welded coupling

SA-4323 Other Types of Connections

Other types of rigid transverse connections may be acceptable provided that the structural characteristics are documented by engineering evaluation and tested per SA-5400.

SA-4324 Limitations of Ductwork Joints and Seams

Longitudinal seams and transverse joints whose structural integrity is dependent on the folded or punched metal, shall be pressure tested. Test pressure shall be the structural capability pressure.

Longitudinal seams using sealants or elastomers to meet the leakage requirements shall be qualified by test, analysis, or test and analysis to assure meeting the design criteria of SA-4600. Brazed welding may be used for sealing purposes.

SA-4325 Bolts and Fasteners

Requirements for bolted connections of duct-to-duct and duct-to-housing, with a design pressure differential less than 15 in. wg (3735 Pa), shall be as follows:

(a) Maximum bolt spacing shall be four inches on center unless otherwise specified by the design specification. The adequacy of bolt spacing greater than four inches on center, for pressure boundary integrity, shall be documented by calculation or testing.

(b) Minimum bolt diameter shall be $^{3}/_{8}$ in. (9.52 mm) unless otherwise specified by the design specification. The adequacy of bolt diameters less than $^{3}/_{8}$ in. shall be documented by calculations or testing.

Requirements for bolted connections for duct with design pressure differentials exceeding 15 in. wg (3735 Pa) shall be determined by calculations or testing.

Nonbolted, nonwelded-type fastening devices (e.g., screws, rivets) shall have their adequacy demonstrated for the load combinations of SA-4212 and documented by calculation or testing.

Bolted connections shall be verified as being capable of sustaining all loading combinations by using an appropriate stress intensification factor.

SA-4400 COMPONENTS

SA-4410 FLEXIBLE CONNECTIONS

(a) Flexible connections shall be designed to meet the requirements for design given by SA-4212, SA-4500, and NFPA 90A. Allowable leakage (fabric leakage and joint leakage) shall be determined in accordance with SA-4500.

(b) Flexible connections shall be rated by pressure and qualified life. The qualified life shall be determined by testing, or calculation, or both and be based on the environmental conditions provided by the design specification. Minimum physical properties (i.e., tensile strength), subject to degradation due to the environments required to satisfy design, shall be the basis of qualified life.

(c) Flexible connection pressure rating shall be determined by an ultimate strength test. The pressure rating of the connection shall be no greater than 50% of burst pressure. Calculation of burst pressure can be done in lieu of the test. Burst pressure shall exceed structural capability pressure.

Copyright ASME International
Provided by IHS under license with ASME
No reproduction or networking permitted without license from IHS
Not for Resale

(d) If adhesive is used in fabrication or installation of flexible connections, it shall be environmentally qualified for use in expected environmental conditions.

SA-4420 GASKETS

Gaskets shall be made of materials which are compatible with the service conditions (see SA-4600). Gasket material dimensions shall be based on joint design. An acceptable criterion for compression of gasket material shall be established on the basis of the gasket chosen. This acceptance criterion and the service life of the gasket material shall be documented by an engineering evaluation or testing.

SA-4430 ACCESS DOORS AND PANELS

Construction of doors/panels and door frames shall be selected to meet the allowable leakage determined in SA-4500. Sealing surfaces between the door/panel frame shall be designed for compression sealing. The design shall incorporate means for adjusting compression forces, gasket compression, and alignment.

Spacing of hinges, latches, and bolts shall be determined by calculation or test to ensure a uniform compression of the gasket. Spacing shall enable a compression of at least 50% of nominal gasket thickness and provide a gasket compression uniformity of ±20%.

Door hinges shall be designed to minimize damage to compression seals due to friction and shear forces during opening and closing of the doors.

Dogs, hinges, latches, etc., shall be designed such that lubrication materials shall not enter the interior of the ductwork.

See Nonmandatory Appendix SA-C (SA-C-1210) for additional guidance on the design of access doors.

SA-4440 PROVISIONS FOR TESTING AND MAINTENANCE

SA-4441 Test Ports

The Engineer shall evaluate the design function of the equipment to determine where test ports (including injection and sampling ports) are required.

SA-4450 MISCELLANEOUS

SA-4451 Drains

(a) Consideration shall be given to drains depending on requirements, services, or components within ductwork.

(b) Drains form an integral part of the ductwork system pressure boundary and are subject to air leakage requirements established in SA-4500.

(c) For additional guidance on the design of drains, see Nonmandatory Appendix SA-C (SA-C-1220).

SA-4452 Insulation

(a) Insulation shall be provided as required to ensure air conditioning function, limit condensation, or provide acoustic noise reduction.

(b) Acoustic linings and thermal insulation shall not be applied to the inside of ducts which may become contaminated during normal plant operations.

(c) Insulation applied to the outside of ducts shall not prevent access to doors, access hatches, or other components requiring adjustment or maintenance.

(d) The fire hazard classification of applied insulation, adhesive, and sealer shall not exceed a flame spread of 25 and smoke developed of 50 in accordance with NFPA-90A.

(e) Insulation shall be attached to ductwork using a method which will not adversely affect the system/component safety function.

SA-4453 Air Distribution Devices

Design of air distribution devices and their attachments shall comply with SA-4200 and AA-4300.

The performance rating of air distribution devices shall be determined by actual tests performed in accordance with the Air Diffusion Council standard listed in Article SA-2000.

SA-4454 Security Barriers

The requirements for internal and bullet-resistant barriers installed for the purpose of security shall be consistent with appropriate federal regulations.

Consideration shall be given to the impact (pressure, noise, etc.) the installation of security and bullet-resistant barriers will have on the overall performance of the air treatment system in which they are installed. The deadweight of the security and bullet-resistant barriers shall be included in the design of ductwork supports.

Copyright ASME International
Provided by IHS under license with ASME
No reproduction or networking permitted without license from IHS
Not for Resale

SA-4500 PRESSURE BOUNDARY LEAKAGE

SA-4510 GENERAL

Pressure boundary leakage shall be limited to that allowed by the system functional and environmental design requirements.

Allowable leakage for a system, or portion of a system, shall be determined considering the following factors (as a minimum):

(a) control of airborne contamination
(b) control of space pressure
(c) control of space temperature
(d) control of space humidity

SA-4520 APPLICABILITY

Pressure boundary leakage shall apply to air cleaning, air cooling, and ventilation systems. Each system's pressure boundary shall include, but not be limited to, the following items as applicable:

(a) ductwork as defined in SA-1130;
(b) fan housings;
(c) damper frames and valve bodies (and seats, where used for pressure boundary isolation);
(d) heating and cooling coil housings (or frames for duct mounted coils);
(e) mounting frames for components used for the reduction of radioactive contamination;
(f) instrumentation or other components connected to the ductwork;
(g) air cleaning unit housings.

SA-4530 EVALUATION

SA-4531 Responsibility

The Engineer shall evaluate each system to establish the allowable leakage to assure its design ventilation, temperature, and contamination control function is achievable.

SA-4532 Allowable Leakage Determination

The following criteria shall be utilized in the determination of allowable leakage:

(a) application of governing codes, regulations, and plant specific requirements;
(b) consideration of each system's operating mode, including anticipated system upset conditions such as rapid closure of dampers;
(c) normal and maximum operating static pressures throughout the pressure boundary; and
(d) system internal and external environmental conditions.

Guidance for determination of allowable leakage is given in Nonmandatory Appendix SA-B.

SA-4533 Exceptions to Leakage Requirements

Portions of air cleaning, air cooling, and ventilation systems exhibiting one of the following conditions need not be subjected to quantitative measurement of leakage unless otherwise required by the design specification (however, the system shall be pressurized to normal operating pressure differential (NOPD) to locate and seal all audible leaks):

(a) all ducts serving the protected space and located within a protected space, regardless of length;
(b) plant vent stacks or ducts outside plant buildings, when high-level or mixed-mode release credit is not required to meet off-site dose limits;
(c) systems which provide air cooling or heating function only located entirely in a clean interspace;
(d) other exceptions to quantitative measurement of leakage requirements shall be technically justified and specifically documented with basis by the Owner or his agent.

SA-4534 Documentation

Evaluation for allowable leakage of each system, or portion thereof, shall be documented. This documentation shall include the following:

(a) identification of system or portion of system
(b) governing codes, regulations, and plant specific requirements
(c) purpose of leakage control (see SA-4510)
(d) system modes of operation
(e) normal operating pressure differential (NOPD) and system operating pressure transient (SOPT)
(f) method of derivation of allowable leakage
(g) test pressures and associated allowable leakage

SA-4540 LEAKAGE TESTING

Where leakage testing is specified for a system, as a result of the Engineer's evaluation, it shall be performed in accordance with SA-5300 and Section TA of this Code.

Copyright ASME International
Provided by IHS under license with ASME
No reproduction or networking permitted without license from IHS
Not for Resale

SA-4600 DESIGN SPECIFICATION

A design specification shall be prepared which consists, as a minimum, of the following information regarding the ductwork and ductwork supports covered by this section:

(a) loads as defined by SA-4211.

(b) environmental conditions.

(1) ductwork external-design environmental conditions including pressure, temperature, relative humidity, radiation exposure, and hostile environmental factors for all plant conditions

(2) ductwork internal design environmental conditions for all system operating conditions

(c) service conditions as defined by AA-4213.

(d) design and service limits as defined by AA-4214.

(e) allowable ductwork leakage, as defined by SA-4500.

(f) system safety-related function: Identify the fuction of the ductwork system for each plant condition. The function shall consist of purpose and operational parameters (i.e. flow, leakage, pressure, temperature). Plant conditions and service limits are defined by AA-4213 and AA-4214.

Copyright ASME International
Provided by IHS under license with ASME
No reproduction or networking permitted without license from IHS
Not for Resale

ARTICLE SA-5000
INSPECTION AND TESTING

SA-5100 GENERAL

Inspection and testing shall be in accordance with the requirements of AA-5100, AA-5200, AA-5300, TA-3300, and the additional requirements of this section.

SA-5110 SCOPE AND APPLICABILITY

This section contains general requirements for the inspection and testing of ductwork and ductwork supports.

SA-5120 RESPONSIBILITY FOR PROCEDURES

When an inspection or test is required herein, written inspection or testing procedures shall be developed, by the parties performing the test or inspection, to the specific requirements of this section. The inspection or testing shall be performed by personnel qualified in accordance with ASNT SNT-TC-1A as amended by ASME NQA-1 and AA-6433.

SA-5200 VISUAL INSPECTION

SA-5210 GENERAL REQUIREMENTS

Visual inspections shall be performed in accordance with AA-5200 and TA-3510.

SA-5220 WELDED CONNECTIONS

Inspection and testing of welds shall be performed in accordance with AA-5300 and Article AA-6000.

SA-5230 DUCTWORK

Ductwork shall be visually inspected for proper dimensions including tolerances, as required by SA-6500 and governing construction documents. Ductwork fabrication shall meet the applicable requirements of Article SA-6000.

SA-5231 Joints and Seams

Joints and seams shall be visually inspected. Acceptance criteria shall be as follows:

(a) Joints and seams shall comply with the requirements of SA-6400 and SA-6500.

(b) Gasketed joints shall provide uniform gasket compression. Gaskets shall be installed per construction documents.

(c) Brazed joints shall comply with the requirements of AA-6430.

(d) Longitudinal or transverse welded joints shall comply with the requirements of SA-5220.

(e) Threaded fasteners shall be provided with locking devices in accordance with AA-6258.

SA-5232 Stiffeners

Stiffeners shall be visually inspected to ensure compliance with the following acceptance criteria:

(a) Stiffeners shall comply with the fabrication and installation requirements of Article SA-6000.

(b) Welds shall comply with the requirements of SA-5220.

(c) Threaded fasteners shall be provided with locking devices in accordance with AA-6258.

(d) Removal of temporary attachments shall be confirmed.

SA-5240 DUCTWORK SUPPORTS

Supports shall be visually inspected during installation, after installation, or both in accordance with the following acceptance criteria:

(a) Supports shall comply with the fabrication and installation requirements of SA-6400 and SA-6500.

Copyright ASME International
Provided by IHS under license with ASME
No reproduction or networking permitted without license from IHS
Not for Resale

(b) Welded joints shall comply with the requirements of SA-5220.

(c) Threaded fasteners shall be provided with locking devices in accordance with AA-6258.

(d) Removal of temporary attachments shall be confirmed.

SA-5300 PRESSURE BOUNDARY LEAKAGE TESTING

SA-5310 GENERAL

The ductwork system shall be tested to demonstrate compliance with the design leakage requirements identified in SA-4500, unless exempted by SA-4533.

SA-5320 SYSTEMS COMPLETENESS

Prior to testing, the system shall be complete including all pressure boundary items identified in SA-4520, with the following exceptions:

(a) Terminal air distribution devices may be excluded from the test.

(b) Pressure boundary items not yet installed may be excluded from testing with approval of the Engineer. In such cases, prototype testing shall be performed to determine the typical leakage rate for the installation method. Detailed procedures shall be prepared to control installation of items not tested with the system. Procedures shall specify any hold points, special surface preparation or finish, and final inspection requirements to ensure that the item is installed similar to the prototype. Typical leak test values shall be increased by a factor of 10% and added to the actual leakage in the test report, and noted as such.

(c) Systems may be tested in sections, if necessary, as allowed by SA-5330. Testing shall be in accordance with SA-5300.

SA-5330 ALLOWANCES FOR TESTING SYSTEM LEAKAGE RATES BY SECTIONS

Temporary isolation at a transverse joint shall be allowed subject to the following requirements:

(a) Transverse joints not subjected to a quantitative leak test shall be companion angle type or other types which enable visual inspection of the sealing mechanism between mating ductwork sections.

(b) Assembled joints utilizing gasketing shall be visually inspected to ensure uniformity of gasket compression.

(c) Assembled joints utilizing mastic or liquid sealant shall be visually inspected to ensure that such material has been applied in accordance with the procedure approved by the Engineer.

(d) The reduced allowable leakage (L_r) of ductwork sections shall be as follows:

$$L_r = L_S - R$$

$$R = (C_J/C_T)\, L_S$$

where

R = reduction in allowable leakage in cfm/ft^2 (L/m^2)
C_J = total perimeter of capped end joints of test section
C_T = total perimeter of all joints in tested section, including capped end joints
L_S = section allowable leakage

SA-5340 TESTING PROCEDURES

Prior to pressure boundary leakage testing, test procedures shall be developed in accordance with TA-3400. All test equipment shall be specified with the proper range and required accuracy. Test procedures shall include acceptance criteria determined by SA-4500, SA-5320, and SA-5330.

SA-5350 DOCUMENTATION

A test report shall be prepared to document the pressure boundary leakage test. This report shall include, as a minimum, the following information:

(a) system or portion of system tested;

(b) specified allowable leakage and test pressure;

(c) calculations for ductwork square footage for systems tested by sections;

(d) adjustments to allowable leakage per SA-5330(d);

(e) measured leak rates;

(f) list of pressure boundary components which were not installed during the pressure boundary leakage test;

(g) test equipment used; including model no., serial no., and evidence of calibration;

(h) names of test personnel;

(i) date of test.

Copyright ASME International
Provided by IHS under license with ASME
No reproduction or networking permitted without license from IHS
Not for Resale

SA-5360 ACCEPTANCE CRITERIA

SA-5361 Quantitative Leakage Tests

Acceptance criteria for quantitative leakage tests shall comply with SA-4500 and SA-5350(d).

SA-5362 Nonquantitative Leakage Tests

For nonquantitative leakage tests allowed by SA-4533, the acceptance criteria shall be that audible leaks have been sealed.

SA-5400 STRUCTURAL CAPABILITY TESTS

SA-5410 DUCTWORK PRESSURE TEST

A pressure test shall be performed at the structural capability pressure per TA-3522. This test pressure shall be maintained for the duration of the inspection. Upon completion of this pressure test, ductwork and equipment exhibiting permanent distortion or breach of integrity shall be repaired or replaced. The pressure test shall be repeated after repair or replacement until no permanent distortion or breach of integrity is observed.

This test is not required if duct construction specified is equal to or greater than the duct construction allowed in the SMACNA standards listed in Article SA-2000 for the system operational pressure transient (SOPT).

SA-5420 LONGITUDINAL SEAM QUALIFICATION TEST

Ductwork, utilizing folded or punched metal longitudinal seams, shall be pressure tested to qualify the structural design capability of those seams. This pressure test shall be conducted at the beginning of fabrication and before any ductwork with these seams is installed in the facility. The pressure test shall be conducted on each sheet-metal gauge utilizing these seams. Seams shall be tested at the structural capability pressure for the system(s).

Copyright ASME International
Provided by IHS under license with ASME
No reproduction or networking permitted without license from IHS
Not for Resale

ARTICLE SA-6000
FABRICATION AND INSTALLATION

SA-6100 GENERAL

Ductwork and supports shall be fabricated and installed in accordance with this section and Article AA-6000.

SA-6110 SCOPE AND APPLICABILITY

This section contains specific requirements for the fabrication and installation of ductwork and its supports.

SA-6120 MATERIALS

SA-6121 Material Selection

Material used in fabrication and installation performed under this section shall conform to the requirements of Article SA-3000.

SA-6122 Material Identification

Materials to be utilized in the fabrication and installation of components, parts, and appurtenances shall be identified on fabrication or installation plans, or both and in the specifications, as required in Article AA-8000.

SA-6123 Repair of Material With Defects

Material with defects that are discovered or produced during the fabrication and installation process may be used, provided the defects are repaired in accordance with the requirements of Article AA-8000, and for weld repairs, in accordance with AA-6300.

SA-6130 CONTROL OF INSTALLATION AND FABRICATION PROCESS

Quality control procedures shall be prepared and kept current for all fabrication and installation processes in accordance with the requirements of Article AA-8000.

SA-6140 WELDING

The welding of ductwork and ductwork supports shall comply with the requirements of AWS D1.1, AWS D1.3, AWS-D9.1 and ASME Code, Section IX, as applicable.

Welding and brazing performed in accordance with this section shall meet the requirements of AA-6300 and AA-6400.

SA-6200 FABRICATION PROCESS

SA-6210 CUTTING, FORMING, BENDING, ALIGNING, AND FITTING

(a) Uncoated metal may be cut, formed, or bent by any means that does not degrade the mechanical or chemical properties of the material.

(b) Coated metal may be cut, formed, or bent as described in para. SA-6211. Coating damaged by scratches, gouge marks or the removal of coating shall be repaired in accordance with AA-6540.

(c) Inside bend radii shall not be less than the values given in the appropriate ASTM standard for the material grade.

(d) Parts that are to be joined may be fitted, aligned and retained in position during the joining operation by the use of bars, jacks, clamps, drift pins, tack welds or other temporary attachment. The fitting and aligning process shall not cause damage to the joined parts, or their surfaces, or cause enlargement of bolt holes greater than 20% of hole diameter, or $\frac{1}{8}$ in. (3.2 mm), whichever is greater.

(e) Temporary welded attachments may be used in the fabrication or installation of ductwork but shall be completely removed after use. Where such temporary attachments are used, they shall be subject to the following requirements:

(1) Material shall be suitable for welding with no reduction in the structural integrity of the member to which the attachment is secured.

Copyright ASME International
Provided by IHS under license with ASME
No reproduction or networking permitted without license from IHS
Not for Resale

(2) Attachment material shall be identified as required by Article SA-3000.

(3) The welder and welding procedure shall be qualified in accordance with SA-6140.

(4) The immediate area around and including the temporary attachment shall be marked in a suitable manner so that after attachment removal, the area can be examined in accordance with Article SA-5000.

(f) Access doors and access panels shall be fabricated and designed to meet the design requirements of Article SA-4000.

(g) Grilles, registers, diffusers, and their accessories shall be designed to meet the design requirements of Article SA-4000.

SA-6300 MECHANICAL FASTENING

SA-6310 GENERAL

(a) Nuts for all bolts and studs shall be engaged for the full length of the nut thread. Margin shall be allotted to prevent nut from engaging the unthreaded portion of bolt or stud.

(b) High-strength bolts, used in making bolted joints, shall be installed in accordance with the requirements of the "Specification for Structural Joints Using A325 or A490 Bolts" AISC Code.

Standard bolts used in making bolted joints shall be installed in accordance with the requirements of paras. 1.4.4 and 1.5.2 of the "Specification for the Design, Fabrication and Erection of Structural Steel for Buildings" AISC Code.

(c) Self-drilling or self-threading screws are permissible if they are qualified in accordance with the design criteria in Article SA-4000.

(d) Rivets must be qualified in accordance with Article SA-4000.

(e) Pins for securing insulation should be secured to the metal surface by welding. Other attachment methods are acceptable, if allowed by the design specification. Justification of the method of attachment used shall be supported by evaluation or calculation, considering the requirements of SA-4600.

(f) Flange faces shall be free of joint crevices at corners. These defects shall be eliminated by welding and grinding.

SA-6400 FABRICATION TOLERANCES

SA-6410 GENERAL

The fabrication of ductwork shall be accomplished within the tolerances detailed in the following tables. These fabrication tolerances provide a method of quality control. Installation tolerances shall take precedence over fabrication tolerances. Tolerances listed below are maximum deviations permitted from design dimensions. Greater deviations, due to rolling mill tolerances, are not permitted.

(a) Rectangular ducts, measured inside the duct at the joint end or stiffener, shall conform to Table SA-6410-1.

(b) Circular ducts, measured by outside circumference or two interior diameters at 90 deg (±5) to each other, shall conform to Table SA-6410-2.

(c) After fabrication is complete, flat sheet or plate surfaces shall not have a waviness, or bulge, greater than the flatness tolerance given in Table SA-6410-3.

(d) The tolerances given in Tables SA-6410-1, SA-6410-2, and SA-6410-3 are for manufacturing. Maximum operating deflections are given in SA-4230.

(e) Holes prepared for joining mating flanges shall not exceed the required bolt diameter by more than 20%, or $\frac{1}{8}$ in. (3.2 mm), whichever is larger, of bolt diameter. The center-to-center alignment of holes must be held to meet this tolerance or one flange must be drilled. Hole spacing shall be a maximum of 4 in. (102.4 mm) center-to-center, with holes at corners of the flange.

(f) Grilles, registers, and diffusers shall be fabricated to manufacturer's dimensions and tolerances.

SA-6500 INSTALLATION TOLERANCES

Ductwork and their supports shall be installed within the tolerance specified by approved construction documents. These tolerances shall comply with the design requirements of Article SA-4000.

SA-6600 CLEANING, FINISHING, AND COATING

Galvanized surfaces shall be free of damage which impairs the effectiveness of the coating. Surfaces shall be repaired in accordance with AA-6540.

Painted surfaces shall be prepared and finished as described in Article AA-6000.

Painted surfaces shall be free of scratches and welding damage. Surfaces shall be repaired and repainted in accordance with Article AA-6000.

Required marking for identification shall be on the exterior of each section.

Copyright ASME International
Provided by IHS under license with ASME
No reproduction or networking permitted without license from IHS
Not for Resale

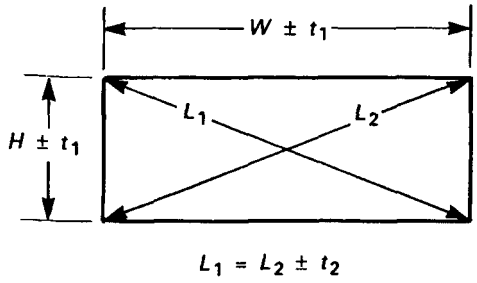

Cross Section
Parallelism/Squareness

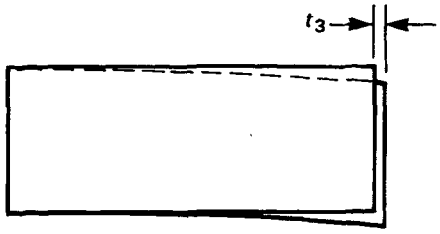

Twist
Per 5 ft Joint

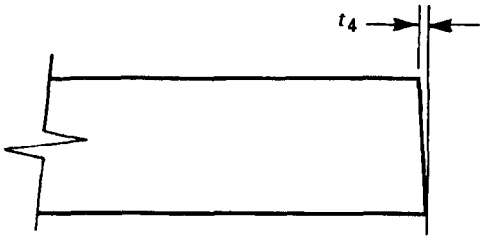

Joint Flange
Squareness

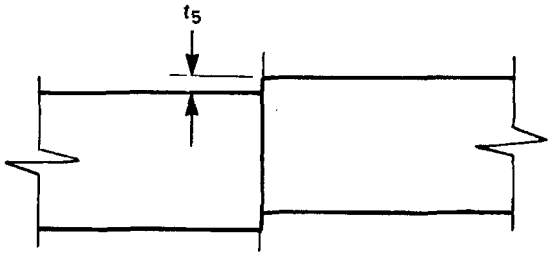

Joint Connection
Maximum Off-set

TABLE SA-6410-1 RECTANGULAR DUCTS: MAXIMUM ALLOWABLE TOLERANCES

	Maximum Allowable Tolerances, in. (mm)				
W* or *H	t_1	t_2	t_3	t_4	t_5
less 12	1/16 (1.6)	1/4 (6.4)	1/8 (3.2)	1/8 (3.2)	1/16 (1.6)
12 to 18	1/8 (3.2)	1/4 (6.4)	3/16 (4.8)	1/8 (3.2)	1/8 (3.2)
18 to 24	1/8 (3.2)	3/8 (9.5)	3/16 (4.8)	1/8 (3.2)	1/8 (3.2)
24 to 48	1/8 (3.2)	3/8 (9.5)	3/16 (4.8)	1/8 (3.2)	1/8 (3.2)
48 and up	1/8 (3.2)	1/2 (12.7)	1/4 (6.4)	1/8 (3.2)	3/16 (4.8)

Copyright ASME International
Provided by IHS under license with ASME
No reproduction or networking permitted without license from IHS
Not for Resale

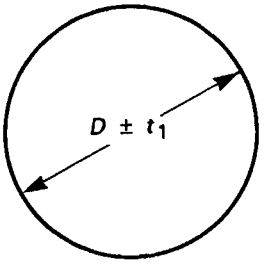

Diameter

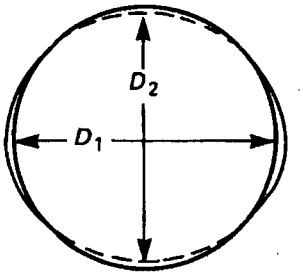

$D_1 = D_2 \pm t_2$

Out-of-Round

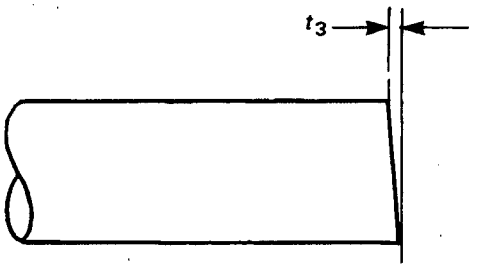

Joint End Squareness

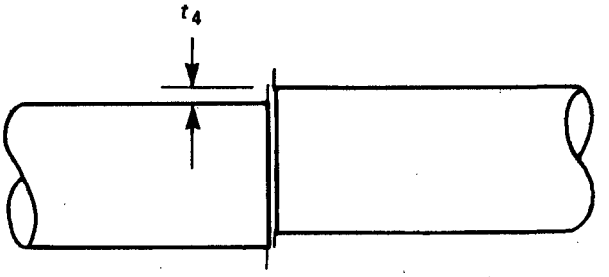

Joint Connection Off-set

TABLE SA-6410-2 CIRCULAR DUCTS: MAXIMUM ALLOWABLE TOLERANCES

	Maximum Allowable Tolerances, in. (mm)			
Diameter	t_1	t_2	t_3	t_4
less 18	1/16 (1.6)	1/4 (6.4)	1/8 (3.2)	1/16 (1.6)
12 to 18	1/8 (3.2)	3/8 (9.5)	1/8 (3.2)	1/8 (3.2)
18 to 24	1/8 (3.2)	1/2 (12.7)	1/8 (3.2)	1/8 (3.2)
24 to 48	1/8 (3.2)	3/4 (19.1)	1/8 (3.2)	1/8 (3.2)
48 and up	1/8 (3.2)	1 (25.4)	1/8 (3.2)	3/16 (4.8)

Copyright ASME International
Provided by IHS under license with ASME
No reproduction or networking permitted without license from IHS
Not for Resale

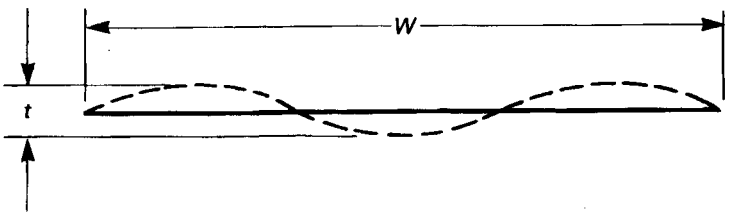

TABLE SA-6410-3 FLATNESS OF SURFACE: MAXIMUM ALLOWABLE WAVINESS TOLERANCE

Maximum Allowable Waviness Tolerance	
t = waviness tolerance of flat surfaces between duct edges and/or adjoining stiffeners. It shall not exceed 125% of allowed Manufacturers' tolerance as specified by:	
Cold-rolled steel sheet	ASTM-A568
Cold-rolled steel plate	ASTM-A6 Table 14
Hot-rolled steel sheet	ASTM-A568
Hot-rolled steel plate	ASTM-A6 Table 15
Galvanized steel sheet	ASTM-A525 Table II

Copyright ASME International
Provided by IHS under license with ASME
No reproduction or networking permitted without license from IHS
Not for Resale

ARTICLE SA-7000
PACKAGING, SHIPPING, RECEIVING, STORAGE, AND HANDLING

SA-7100 GENERAL

Packaging, shipping, receiving, storage, and handling requirements shall be in accordance with Article AA-7000 and this section.

SA-7200 PACKAGING

SA-7210 GENERAL

Ductwork and accessory item packaging requirements are dependent upon the protection level as described by AA-7230. Additional clarification or exceptions are provided below.

(a) Individual duct sections, assembled or unassembled, shall not require special packaging or end closures. These individually identified items may be pelletized for convenience. Protection equal to Level D, of ANSI/ASME NQA-2 Part 2.2, 2.2.4, is required.

(b) Acoustically lined or insulated duct sections shall have protective wrapping to prevent water damage. Protection equal to Level C, of ANSI/ASME NQA-2 Part 2.2, para. 2.2.4, is required.

(c) Grilles, registers, and diffusers shall be packaged individually by the Manufacturer to prevent any degradation. Protection equal to Level C, of ANSI/ASME NQA-2 Part 2.2, para. 2.2.4, is required.

(d) Extractors, turning vanes, and splitter dampers shall be packaged individually by the Manufacturer to prevent damage and degradation until installation. Protection equal to Level C, of ANSI/ASME NQA-2, is required. Should these devices be installed into the ductwork sections before shipment, all moving parts shall be secured and all sliding or operation points shall be protected from degradation by methods equal to Level C. The basic duct section level shall remain D, of ANSI/ASME NQA-2 Part 2.2, 2.2.4.

SA-7300 SHIPPING

This section relates to all transportation methods from the original manufacturer, or supplier, to the job site. In addition to the applicable Federal and State transport regulations, the provisions of Article AA-7000 shall also apply.

SA-7400 RECEIVING

Receiving at the job site or intermediate location, where additional work is to be performed or for long-term storage, shall be accomplished in accordance with the provisions of Article AA-7000. It shall be the requirement, at any receiving point, to have adequate descriptions of items to permit suitable inspection for conformance, damage acknowledgement, and proper documentation. Records of such inspections shall be maintained until the item is reshipped or installed.

SA-7500 STORAGE

SA-7510 GENERAL

Ductwork and accessory item storage requirements are dependent upon the protection level described by AA-7230. These levels shall be the required storage requirements except in certain circumstances as listed below.

(a) Duct sections shall be stored, on adequate dunnage, in accordance with Level D requirements. Lined or insulated ductwork, unless water-proofed at time of fabrication, shall be stored in accordance with Level C requirements. Extractor and splitter dampers shall have moving parts protected in accordance with Level C requirements.

Copyright ASME International
Provided by IHS under license with ASME
No reproduction or networking permitted without license from IHS
Not for Resale

(b) Extractors, turning vanes, and splitter dampers shall be stored in accordance with the applicable levels of para. SA-7214.

(c) Ductwork supports shall be stored in accordance with Level C requirements for uncoated carbon steel and Level D requirements for other ductwork support materials.

(d) Components covered by other sections of this Code that are installed into an integral assembly which is covered by this section shall be stored in accordance with AA-7230.

Copyright ASME International
Provided by IHS under license with ASME
No reproduction or networking permitted without license from IHS
Not for Resale

ARTICLE SA-8000
QUALITY ASSURANCE

SA-8100 GENERAL

Equipment and material covered under this section shall be manufactured, fabricated, installed, inspected, and tested in accordance with the provisions of a quality assurance program meeting the requirements of Article AA-8000.

SA-8200 MATERIAL IDENTIFICATION

Measures shall be established for controlling and identifying material throughout the manufacturing process and during shipment in accordance with Article AA-8000.

SA-8300 DRAWINGS AND DOCUMENTATION

As a minimum, the following drawings and documentation shall be provided to the Owner:

(a) design parameters
(b) material certifications
(c) maximum operating pressure
(d) structural capability pressure
(e) test pressures
(f) basis and quantity for maximum allowable leakage
(g) system layout drawings
(h) welding procedures
(i) visual inspection reports
(j) test acceptance criteria
(k) leak test reports
(l) environmental qualification reports
(m) ductwork and ductwork support fabrication details

Copyright ASME International
Provided by IHS under license with ASME
No reproduction or networking permitted without license from IHS
Not for Resale

ARTICLE SA-9000
NAMEPLATES AND STAMPING

SA-9100 GENERAL

All items manufactured under the requirements of this section shall be identified to assure compliance with the requirements of AA-8200, AA-9130, and AA-9140.

Records, as necessary to assure compliance with AA-8200, shall be maintained by the responsible organization in accordance with the approved quality assurance program.

SA-9110 STAMPING/MARKING

Stamping/marking, as used herein, provides a means of maintaining identification of finished products for the purpose of retaining traceability of material.

SA-9111 Ducts

Each duct section shall have noncorrosive, permanent identification markings. Identification markings shall relate each duct section to the applicable design and fabrication documents. Markings shall be located on the exterior of the duct. Markings need not be visible after installation is complete; however, markings shall be retrievable. It is recommended that the identification markings be placed on the "incoming air" end of the duct joint, as close to the end of the joint as possible, and not in such position as to be hidden or nonreadable.

SA-9112 Ductwork Supports

Each ductwork support shall have noncorrosive, permanent identification markings. Identification markings shall relate each ductwork support to the applicable design and fabrication documents.

SA-9113 Air Distribution Accessories

Air distribution devices (i.e., grilles, registers, diffusers, louvers, etc.) shall be marked, stamped or provided with a nameplate which shall relate to the design and fabrication documents. Identification shall be retrievable after completed installation.

Copyright ASME International
Provided by IHS under license with ASME
No reproduction or networking permitted without license from IHS
Not for Resale

NONMANDATORY APPENDIX SA-A
DIVISION OF RESPONSIBILITY

This Nonmandatory Appendix defines primary responsibility for individual sections of this Code section.

TABLE SA-A-1000
DIVISION OF RESPONSIBILITY

SA-	Item	Responsible Party
3100	Certification of material	Manufacturer/Supplier
3200	Material substitution	Manufacturer/Supplier/Contractor/Engineer
3300	Material testing	Manufacturer/Supplier
4210	Load criteria	Engineer
4220	Stress criteria	Engineer
4230	Deflection criteria	Engineer
4240	Other criteria	Engineer
4320	Duct joints and seams	Contractor/Engineer
4410	Flexible connections	Manufacturer/Contractor/Engineer
4420	Gaskets	Manufacturer/Contractor/Engineer
4430	Access doors and panels	Manufacturer/Contractor/Engineer
4440	Provisions for testing and maintenance	Manufacturer/Contractor/Engineer
4450	Miscellaneous	Manufacturer/Contractor/Engineer
4530	Pressure boundary leakage evaluation	Engineer
4540	Leakage testing	Engineer/Owner/Contractor
4600	Design specification	Engineer
5120	Responsibility for procedures	Manufacturer/Contractor/Owner/Engineer
5200	Visual inspection	Contractor/Manufacturer/Owner
5320	Systems completeness	Engineer/Contractor
5330	Allowance for testing system leakage rates by sections	Engineer/Contractor

Copyright ASME International
Provided by IHS under license with ASME
No reproduction or networking permitted without license from IHS
Not for Resale

TABLE SA-A-1000
DIVISION OF RESPONSIBILITY (CONT'D)

SA-	Item	Responsible Party
5340	Testing procedures	Engineer/Contractor
5350	Documentation	Contractor
5361	Acceptance criteria — quantitative leakage tests	Contractor/Engineer
5362	Acceptance criteria — nonquantitative leakage tests	Contractor
5410	Ductwork pressure test	Contractor
5420	Longitudinal seam qualification test	Contractor
6000	Fabrication and installation	Manufacturer/Contractor
7000	Packaging, shipping, receiving, storage, and handling	Manufacturer/Supplier/Contractor/Owner
8000	Quality assurance	All Parties
9000	Nameplates and stamping	Manufacturer/Supplier/Contractor

Copyright ASME International
Provided by IHS under license with ASME
No reproduction or networking permitted without license from IHS
Not for Resale

NONMANDATORY APPENDIX SA-B
PROCEDURES TO DETERMINE ALLOWABLE LEAKAGE FOR DUCTWORK

ARTICLE SA-B-1000

SA-B-1100 PURPOSE

The purpose of this appendix is to provide additional guidance in order to determine the allowable leakage for air cleaning, air conditioning, and ventilation systems which can be used to determine duct construction, installation, and test requirements.

This appendix presents a method for determining allowable leakage based on health physics requirements (such as radioactivity concentration, maximum permissible concentration, and iodine protection factor), and provides typical sample problems.

Optional guidance is also provided for determining alternate leakage criteria based on air cleaning and air cooling system effectiveness and expected system installation qualities.

SA-B-1200 ALLOWABLE LEAKAGE BY HEALTH PHYSICS CRITERIA

SA-B-1210 GENERAL

10 CFR Part 20 sets limits on the airborne radioactive material concentrations in areas of nuclear facilities in which plant personnel may be present. These limits are given by 10 CFR 20 Appendix B, Table 1.

This section provides procedures to determine the maximum duct outleakage based on the maximum permissible concentration (MPC) as determined by 10 CFR 20.103, paras. a and b.

SA-B-1220 PROCEDURE TO DETERMINE ALLOWABLE LEAKAGE BY MAXIMUM PERMISSIBLE CONCENTRATION METHOD

SA-B-1221

The following describes a procedure for determining allowable leakage, in cfm per square foot (L/s per square meter) of duct surface, under positive pressure in either normal or transient conditions, which are located in a clean interspace.

(a) Determine the approximate radioactivity concentration (C_d) in MPC expected inside the duct.

(b) Determine the approximate radioactivity concentration (C_r) in MPC that can be expected in the room. For continuous occupancy, C_r is less than 1.

(c) Enter Fig. SA-B-1221 with the C_r/C_d ratio and determine the allowable unit leakage in cfm/ft^2 (L/s/m^2) of duct surface. The value taken from the chart will be applicable at the operating pressure.

where

L = allowable duct leakage per unit surface area, cfm/ft^2
A = duct surface area, ft^2 (m^2)
h = duct height, in. (mm)
b = duct width, in. (mm)
l_d = duct length, ft(m)
D = duct diameter, in. (mm)
ℓ = room length, ft (m)
w = room width, ft (m)
H = room height, ft (m)
V_r = room volume, ft^3 (m^3)
qv = room ventilation rate, cfm (L/s)

Copyright ASME International
Provided by IHS under license with ASME
No reproduction or networking permitted without license from IHS
Not for Resale

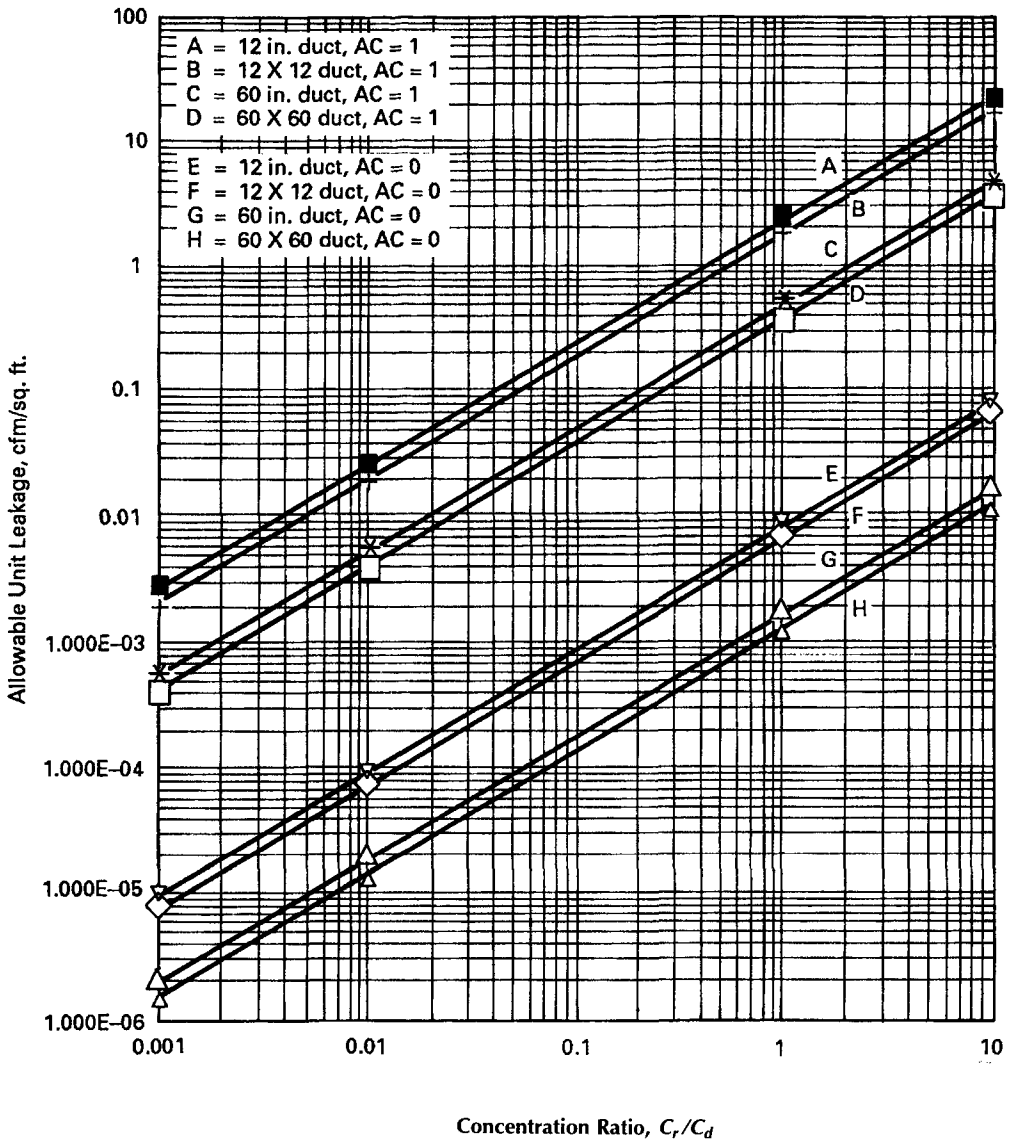

GENERAL NOTES:

(a) Based on eq. (B-1) in para. B.2.1(d) and a 25 ft^2 room × 20 ft high. For other duct (and room) lengths and heights, prorate chart values by

$$L = L_{chart} \times \frac{\text{duct length}}{25} \times \frac{\text{room height}}{20}$$

(b) Contamination assumed to mix uniformly in space.

(c) 1-131 assumed to be contaminating nuclide.

(d) Allowable unit leakage applies to maximum operating pressure P_d as defined in para. 4.6.3.

FIG. SA-B-1221 ALLOWABLE UNIT LEAKAGE FROM DUCT OR HOUSING TO OCCUPIED SPACE

Copyright ASME International
Provided by IHS under license with ASME
No reproduction or networking permitted without license from IHS
Not for Resale

AC = room ventilation rate, air changes per hour or $60qv/\text{Hlw}$ ($3.6\ qv/\text{Hlw}$)
C_r = radioactive concentration in room, μCi/cc
C_d = radioactive concentration in duct, μCi/cc
G = contamination source term, μCi/hr
$T^1/_2$ = nuclide half-life, hr
λ = radioactivity decay constant, hr^{-1}
MPC = maximum permissible concentrations

Duct-to-room contamination source term:

$$G = 1.7 \times 10^6 C_d L A \qquad (1)$$

$$(G = 3.6 \times 10^6 C_d L A)$$

Equilibrium concentration in the room that results from outleakage is:

$$C_r = \frac{G}{28320\ V_r\left\{\lambda + \dfrac{60\ qv}{V_r}\right\}} \qquad (2)$$

$$\left\{C_r = \frac{G}{1 \times 10^6\ V_r\left\{\lambda + \dfrac{3.6\ qv}{V_r}\right\}}\right\}$$

Equations (1) and (2) conservatively assume no reduction in C_r due to exfiltration of air from room at the duct leakage rate. Room volume is:

$$V_r = H\ell w \qquad (3)$$

For a rectangular duct, the surface area is:

$$A = \frac{\ell_d}{6}(h + b) \qquad (4)$$

$$\left\{A = \frac{\ell_d}{500}(h + b)\right\}$$

Substituting eqs. (1), (3), and (4) into eq. (2) and transposing, the general equation for a rectangular duct is:

$$L = \frac{H\ell w}{10\ \ell_d\ (h + b)}\left\{\frac{C_r}{C_d}\right\}\left\{\frac{0.693}{T^1/_2} + \overline{\text{AC}}\right\} \qquad (5)$$

$$\left\{L = \frac{138\ H\ell w}{\ell_d\ (h + b)}\left\{\frac{C_r}{C_d}\right\}\left\{\frac{0.693}{T^1/_2} + \overline{\text{AC}}\right\}\right\}$$

Assuming that the duct cross section is square ($b = h$) and that the room is square ($w = \ell$), eq. (5) reduces to:

$$L = \frac{1}{20}\left\{\frac{C_r}{C_d}\right\}\frac{H\ell^2}{h\ell_d}\left\{\frac{0.693}{T^1/_2} + \overline{\text{AC}}\right\} \qquad (6)$$

$$\left\{L = \frac{69\ H\ell^2}{h\ell_d}\left\{\frac{C_r}{C_d}\right\}\left\{\frac{0.693}{T^1/_2} + \overline{\text{AC}}\right\}\right\}$$

Further assuming that the room height is 20 ft (6.1 m):

$$L = \left\{\frac{C_r}{C_d}\right\}\frac{\ell^2}{h\ell_d}\left\{\frac{0.693}{T^1/_2} + \overline{\text{AC}}\right\} \qquad (7)$$

$$\left\{L = \frac{420\ \ell^2}{h\ell_d}\left\{\frac{C_r}{C_d}\right\}\left\{\frac{0.693}{T^1/_2} + \overline{\text{AC}}\right\}\right\}$$

If the contaminating nuclide is I-131 ($T^1/_2 = 193.6$ hr) and l = 25 ft and ℓd = 25 ft (7.6 m):

$$L = \left\{\frac{C_r}{C_d}\right\}\frac{25}{h}(0.00358 + \overline{\text{AC}})\Big\} \qquad (8)$$

$$\left\{L = \left\{\frac{C_r}{C_d}\right\}\frac{25}{h}(0.00358 + \overline{\text{AC}})\right\}$$

For a sealed room, $\overline{\text{AC}} = 0$:

$$L = \frac{1}{11.17}\left\{\frac{C_r}{C_d}\right\}\frac{1}{h} \qquad (9)$$

$$\left\{L = \frac{11.43}{h}\left\{\frac{C_r}{C_d}\right\}\right\}$$

Copyright ASME International
Provided by IHS under license with ASME
No reproduction or networking permitted without license from IHS
Not for Resale

For a room with $\overline{AC} = 1$:

$$L = \left\{\frac{C_r}{C_d}\right\} \frac{25.09}{h} \tag{10}$$

$$\left\{L = \frac{3202}{h} \left\{\frac{C_r}{C_d}\right\}\right\}$$

For a round duct, eq. (6) is replaced by:

$$A = \pi \left\{\frac{D}{12}\right\} \ell_d \tag{11}$$

$$\left\{A = \pi \left\{\frac{D}{1000}\right\} \ell_d\right\}$$

and general eq. (7) becomes:

$$\left\{L = \frac{1}{15.7} \left\{\frac{C_r}{C_d}\right\} \left\{\frac{H\ell w}{\ell_d D} \left\{\frac{0.693}{T^1\!/_2} + \overline{AC}\right\}\right\}\right\} \tag{12}$$

$$L = 88.4 \left\{\frac{C_r}{C_d}\right\} \left\{\frac{H\ell w}{\ell_d D} \left\{\frac{0.693}{T^1\!/_2} + \overline{AC}\right\}\right\}$$

Where N nuclides are present in the duct, it can be shown that:

$$L = \frac{H\ell w}{10\ell_d(h + b)} \frac{\sum_{n=1}^{N} C_r n/MNPCn}{\sum_{n=1}^{N} \frac{C_d n/MPCn}{0.693/T^1\!/_2/2n + \overline{AC}}} \tag{13}$$

In most nuclide groupings, the term $(0.693/T^1\!/_2)$ is negligible when compared to even minimal ventilation air change rates used in practice. Hence, eq. (13) simplifies to:

$$\left\{L = \frac{138\ H\ell w}{\ell_d\ (h + b)} \frac{\sum_{n=1}^{N} C_r n/MPCn}{\sum_{n=1}^{N} \frac{C_d n/MPCn}{0.693/T^1\!/_2/2n + \overline{AC}}}\right\}$$

$$L = \frac{H\ell w\ \overline{AC}}{10\ell_d\ (h + b)} \frac{\sum (C_r n/MPCn)}{\sum (C_d n/MPCn)} \tag{14}$$

$$\left\{L = \frac{138\ H\ell w\ \overline{AC}}{\ell_d\ (h + b)} \frac{\sum (C_r n/MPCn)}{\sum (C_d n/MPCn)}\right\}$$

Since

$$\sum_{n=1}^{N} (C_r n/MPCn)$$

$C_r n/MPCn$ is by 10 CFR 20, the equivalent concentration in MPC, it can be seen that for a ventilated room eqs. (14) and (5) are essentially the same. It can be concluded that eq. (5) is applicable to multi-nuclide duct leakage as well. Finally, the ratio

$$\sum_{n=1}^{N} (C_r n/MPCn)$$

represents the fraction of maximum permissible dose for the stated period of exposure, usually a 40 hr week.

Determine the leak test requirements from SA-4500. If testing is required, determine test method from TA-4300 and the required test pressure. Adjust allowable leak rate for test pressure in accordance with SA-B-1222(h).

SA-B-1222

For spaces required to be maintained at a negative pressure with respect to surrounding areas, the effect of inleakage into negative pressure ducts, outside of the space served, must be evaluated to determine the reduction in air exchange rate and corresponding increase in room MPC. The procedure is as follows:

(a) Determine source terms and parameters for the event (e.g., pump seal leak rate, concentration of leaking fluid space volume, required MPC).

(b) Determine the minimum air exchange rate (air flow rate/room volume) required to maintain minimum MPC based on ALARA program.

(c) Determine the minimum flow rate to maintain space at design negative pressure.

(d) Determine design flow rate (this may be selected to ventilate space and maintain environmental conditions).

(e) Determine minimum airflow tolerance [item (d) – item (b) or item (d) – item (c)].

(f) Determine surface area of duct under negative pressure outside the space served.

(g) Determine allowable leakage rate (cfm/ft^2) (L/s/m^2) by dividing item (e) by item (f).

(h) Determine pressure boundary leakage requirements in accordance with SA-4500. If testing is required,

Copyright ASME International
Provided by IHS under license with ASME
No reproduction or networking permitted without license from IHS
Not for Resale

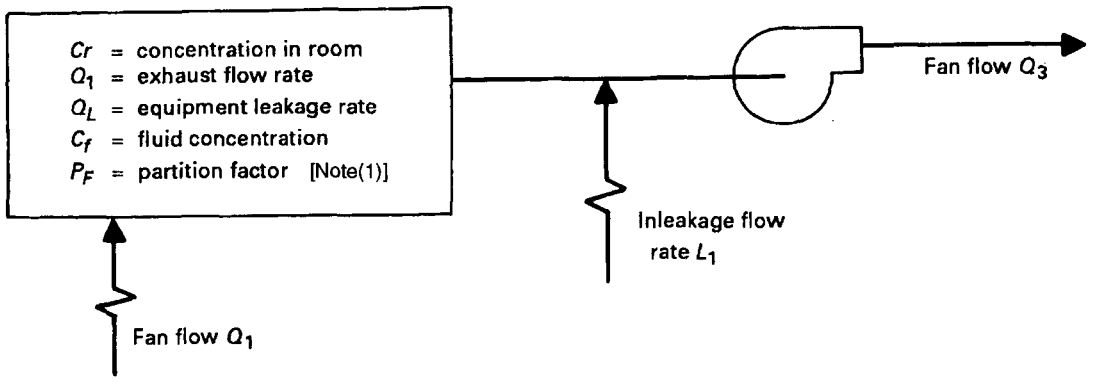

NOTE:
(1) The partition factor is the fraction of radioactivity in the process fluid that will become airborne when that process fluid is leaked into ambient air.

FIG. SA-B-1222 SYSTEM PARAMETERS

adjust allowable leakage for test pressure in accordance with the following formula:

$$L_t = L_o (P_t/P_o)^{1/2} \quad (15)$$

where

L_o = leak rate at operating pressure, cfm/ft^2 (L/s/m^2)
P_o = operating pressure, in. wg (kPa)
P_t = test pressure, in. wg (kPa)
L_t = leak rate at test pressure, cfm/ft^2 (L/s/m^2)

(i) This procedure may not be required if the system is designed, tested, and adjusted such that the minimum design flow from the space served can be achieved and the fan sized to handle the minimum flow plus the infiltration.

See Fig. SA-B-1222.

SA-B-1222.1 Sample Problems

(a) **Given:** A 30 in. × 12 in. × 50 ft (762 mm × 305 mm × 15.2 m) long duct section at the fan discharge, represented by Scheme No. 7 of Fig. SA-B-1410-1, has a rated flow of 10,000 cfm (4720 L/s). The total surface area of the duct system is 1,050 ft^2 (97.5 m^2). This duct is under 4 in. wg (1.0 kPa) positive pressure and passes through an occupied area 25 ft × 25 ft × 20 ft high (7.6 m × 7.6 m × 61 m), where the C_r shall not exceed 0.32 MPC. The discharge for this ductwork is credited with high-level release. The air change rate in the surrounding room is at least 1 air change per hour.

Determine:

Allowable leakage based on health physics requirements.

Solution:

If the same duct is exhausting a contaminated space with an effective radioactivity concentration of 1000 MPC, it is assumed to have a concentration, C_d, of 100 MPC after passing through the filters. If the occupied space around the duct is to be limited to a concentration, C_r, of 0.32 MPC, then $C_r/C_d = 0.0032$.

Solving eq. (5) of SA-B-1221,

$$L = \frac{H\ell w}{10\ell_d (h + b)} \left\{\frac{C_r}{C_d}\right\} \left(\frac{0.693}{T^1/_2} + \overline{\text{AC}}\right)$$

where

$T^1/_2 = 193.6$ hr

$$\left\{L = \frac{138\ \text{H}\ell\text{w}}{\ell_d (h + b)} \left\{\frac{C_r}{C_d}\right\} \left\{\frac{0.693}{T^1/_2} + \overline{\text{AC}}\right\}\right\}$$

$$L = \frac{20 \times 25 \times 25}{10(50)(30 + 12)}\ 0.0032 \left(\frac{0.693}{193.6} + 1\right)$$

$$\left\{L = \frac{138(6.1 \times 7.6 \times 7.6)}{(15.2)(762 + 305)}\ (0.0032) \left\{\frac{0.693}{193.6} + 1\right\}\right\}$$

Copyright ASME International
Provided by IHS under license with ASME
No reproduction or networking permitted without license from IHS
Not for Resale

where

L = 0.0019 cfm/ft^2 or 0.002 cfm/ft^2

L = 0.0096 L/s/m^2 or 0.010 L/s/m^2

(b) **Given:** A cubicle containing a normally operating pump with a leak rate of 1 gal/hr (3.8 L/hr) at a concentration of 0.15 Ci/cc. (The MPC I131 is 9×10^{-9} Ci/cc.)

Determine:

(1) The required minimum room ventilation rate to maintain $\frac{1}{3}$ MPC.

(2) The allowable duct inleakage if the exhaust fan is rated at 1500 cfm (708 L/s)

(3) The unit leakage if duct system consists of 100 ft (30.5 m) of 12 in. × 12 in. ductwork outside of the cubicle (305 mm × 305 mm).

Solution:

Consider a case with the following parameters:

$$C_f = 0.15\ \mu\text{Ci/cc (I-131)}$$

$$\text{allowable } C_r = \tfrac{1}{3}\ \text{MPC} = \tfrac{1}{3}\ 9 \times 10^{-9}\ \text{Ci/cc}$$

$$= 3 \times 10^{-9}\ \text{Ci/cc}$$

P_F = 0.0075 (Reference NUREG-0017, para. 2.2.5.2, Calculation of Releases of Radioactive Materials in Gaseous and Liquid Effluents for PWR's, April 1976)

qL = 1 gal/hr × 1 hr/60 min × 3785 cc/gal

qL = (3.8 L/hr) × 1 hr/60 min × 1000 cc/L

= 63 cc/min

To meet C_r under the above conditions,

$$Q_1 = qL \times C_f \times P_F / C_r$$

= 63 cc/min × 0.15 Ci/cc × 0.0075/(3 × 10^{-9} Ci/ cc)

= 2.363 × 107 cc/min × (1 ft/30.48 cm)3 = 834 cfm

(= 2.363 × 107 cc/min × (1 L/1000 cc) × (1 min/60 sec) = 394 L/s)

If the fan is sized to handle 1500 cfm (708 L/s) for this system, then the allowable clean inleakage (Q_i) is:

$$Q_i = 1500\ \text{cfm} - 834\ \text{cfm} = 666\ \text{cfm}$$

$$(Q_i = 708\ \text{L/s} - 394\ \text{L/s} = 314\ \text{L/s})$$

However, it is also a design consideration to maintain a linear air velocity of 50 ft/min (0.254 m/s) while the 25 ft^2 (2.3 m^2) door is open. (This criterion is set forth to maintain control of airborne radioactivity even though the door is open.) In order to meet this criterion, a flow rate (Q_1) of 50 ft/min × 25 ft^2 = 1250* cfm is required. The allowable clean air inleakage is then 1500 – 1250 (708 – 584) or 250 cfm (124 L/s). The unit duct leakage is therefore equal to:

*0.254 m/s × 2.3 m^2 × (1 L/0.001 m^3) = 584 L/s

$$\frac{250\ \text{cfm}}{\text{duct length} \times \text{perimeter}} = \frac{\dfrac{250\ \text{cfm}}{(50)2(30) + 2(12)}}{12}$$

$$\frac{124\ \text{L/s}}{\text{duct length} \times \text{duct perimeter}} = \frac{\dfrac{124\ \text{L/s}}{(15.2)2(762) + 2(305)}}{1000}$$

L = 0.7 cfm/ft^2

(L = 3.8 L/s/m^2)

SA-B-1230 ALLOWABLE LEAKAGE BY IODINE PROTECTION FACTOR REDUCTION

SA-B-1231 General

The iodine protection factor (IPF) is used to quantify the protection offered to plant personnel by air cleaning systems in protected areas of nuclear facilities which are required to remain habitable during and following design basis accidents.

The location of the air cooling, ventilation, and air cleaning system components, whether inside or outside of the habitability envelope, will affect the value of the IPF. When portions of these systems are located outside the habitability envelope, the effect of duct inleakage or outleakage is a reduction of the IPF value.

SA-B-1232 Determination of IPF

SA-B-1232.1 IPF — All System Components Inside Habitability Envelope

The location of all components of the habitability area air cooling, ventilation, and air cleaning systems, within the habitability envelope, is considered here as the ideal case and basis of evaluating duct leakage.

The IPF is defined as follows:

Copyright ASME International
Provided by IHS under license with ASME
No reproduction or networking permitted without license from IHS
Not for Resale

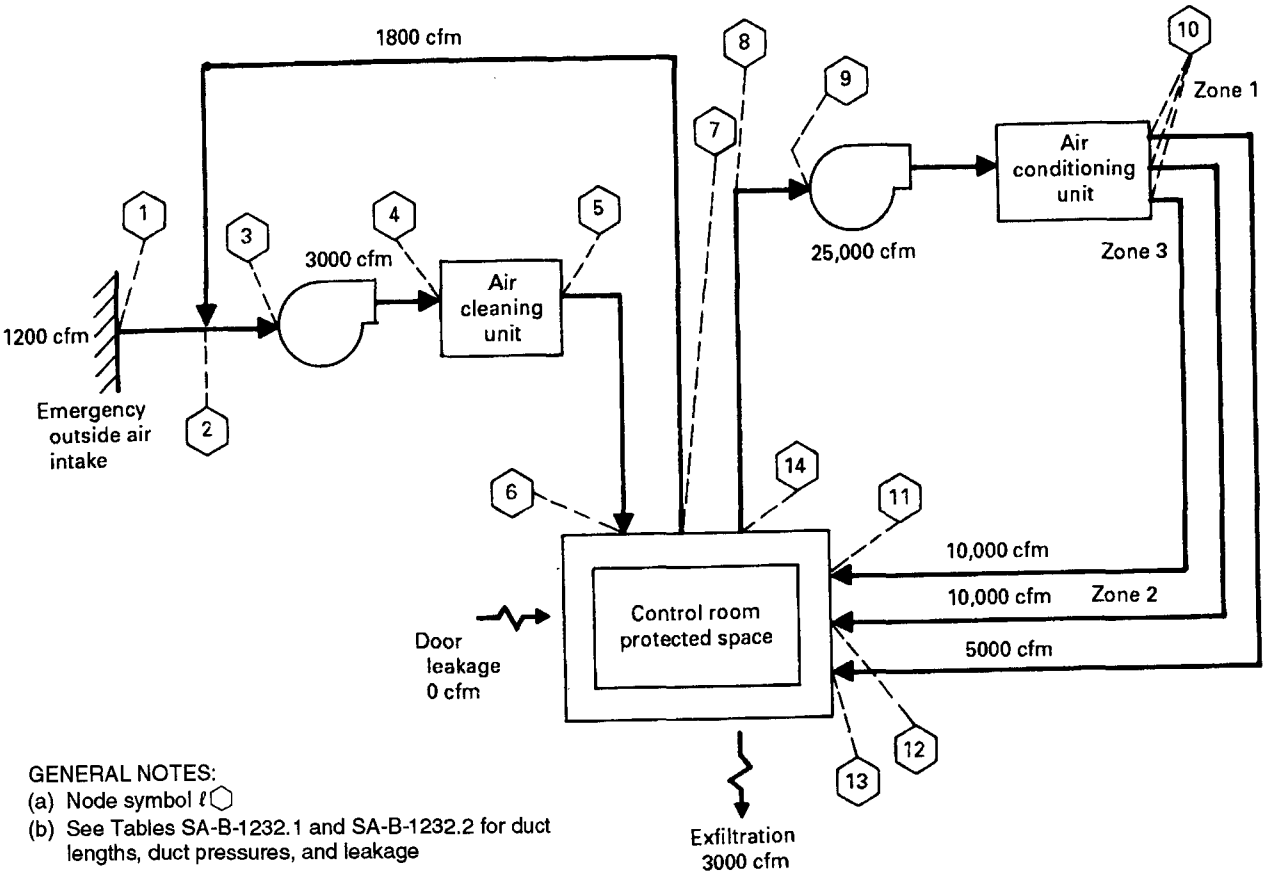

GENERAL NOTES:
(a) Node symbol $\ell\bigcirc$
(b) See Tables SA-B-1232.1 and SA-B-1232.2 for duct lengths, duct pressures, and leakage

FIG. SA-B-1232.1 CONTROL ROOM SYSTEM FLOW DIAGRAM

$$\text{IPF}^{1} = \frac{\text{Dose* Without Protection}}{\text{Dose with Protection}}$$

* - due to radioactive iodine

The value of the IPF for the configuration shown by Fig. SA-B-1232.1 is determined by the following:

$$\text{IPF} = \frac{F_1 + n\,F_2 + F_3}{F_1(1 - n) + F_3} \qquad (16)$$

where

F_1 = rate of outside make-up air, cfm (L/s)
F_2 = rate of filtered air recirculation, cfm (L/s)
F_3 = rate of unfiltered air infiltration through walls, doors, etc., cfm (L/s)
n = radioiodine removal efficiency (per regulatory requirements)

[1] Murphy, Campe, "Nuclear Power Plant Control Room Ventilation System Design for Meeting GDC-19," 13th AEC Air Cleaning Conference.

SA-B-1232.2 IPF — Components Inside and Outside the Habitability Envelope

When all or part of the components of the habitability air cooling, ventilation, and air cleaning systems are located outside of the habitability zone, the leakage of these components will alter the IPF. The following equation takes into account duct leakage for the system configuration shown by Fig. SA-B-1232.2:

$$\text{IPF} = \frac{F_5^{1} + nF_2 + F_3}{F_1(1 - n) + F_3} \qquad (17)$$

where

$$F_1^{1} = F_1 + (L_f - L_o1), \text{ cfm (L/s)} \qquad (18)$$

$$F_5^{1} = F_5 + (L_o2 - L_u) - F_3, \text{ cfm (L/s)} \qquad (19)$$

$$F_1 = F_5 + (L_o1 - L_f) + (L_o2 - L_u) - F_3, \text{ cfm (L/s)} \qquad (20)$$

Copyright ASME International
Provided by IHS under license with ASME
No reproduction or networking permitted without license from IHS
Not for Resale

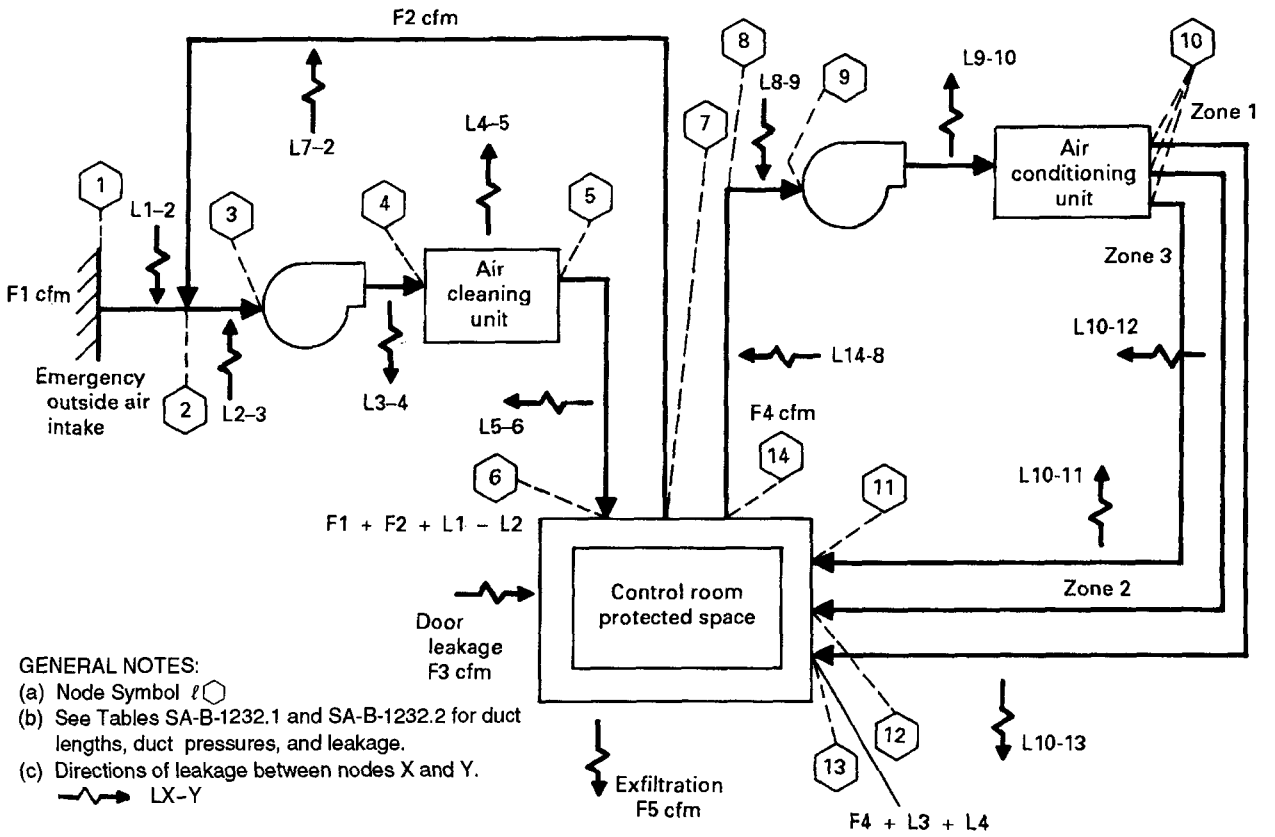

FIG. SA-B-1232.2 CONTROL ROOM SYSTEM FLOW DIAGRAM WITH LEAKAGE PATHS

where

L_f = Duct and housing inleakage with subsequent filtration, cfm (L/s)

L_o1 = outleakage from positive pressure air cleaning ducts and housings, cfm (L/s)

L_u = duct and housing inleakage without filtration, cfm (L/s)

L_o2 = duct and housing outleakage from positive pressure air conditioning system, cfm (L/s)

F_5 = control room boundary exfiltration, cfm (L/s)

NOTE: $(L_o1 - L_f) + (L_o2 - L_u)$ represents the additional make-up air required in order to maintain control room pressurization due to air conditioning duct and housing leakage.

SA-B-1233 Procedure to Determine Allowable Leakage by IPF Value Reduction

The following procedure quantifies the reduction of the effectiveness of the habitability area air cleaning system due to duct leakage, in terms of IPF value reduction. By limiting the percent reduction of IPF value, with respect to duct leakage, the effectiveness of the air cleaning system in limiting personnel dose is maintained.

(a) The determination of the air cleaning system flow rate usually involves an iterative process because it is based on:

(1) the amount of airflow required to maintain a positive pressure differential [approximately 0.125 in. wg) (0.031 kPa)] across the control boundary, including leakage through the duct system; and

(2) the amount of filtered recirculation air required to achieve the required IPF.

(b) The air required to pressurize the control room is first calculated, and an assumed quantity for duct leakage is added to it. After duct and housing leakage calculations have been performed for the system configuration and layout, the original assumption is revised accordingly. The make-up airflow rate should be equal to the control room exfiltration air plus duct outleakage less the duct inleakage and control room infiltration (if any).

(c) The filtered recirculation air quantity is determined by calculating the ratio of recirculated air to outside air to meet a conservative IPF. The conservative

Copyright ASME International
Provided by IHS under license with ASME
No reproduction or networking permitted without license from IHS
Not for Resale

IPF is determined by calculating the minimum acceptable IPF required to meet General Design Criterion 19 (10 CFR 50, Appendix A) limits and multiplying this by a safety factor which will allow for a decrease in IPF due-to-duct leakage. The recirculation air quantity is then rechecked and revised, as necessary, when evaluating the IPF reduction factor due to duct leakage.

(d) After the outside and recirculated air quantities are initially determined and the equipment located, the ductwork can be sized and routed. The pressure in the duct, relative to the surrounding area, must be determined for the purpose of duct leakage calculations.

(e) Next, calculate duct surface areas outside the habitable zone, classify as positive pressure, filtered recirculation, unfiltered recirculation.

(f) Based on a parametric analysis, using eqs. (17) through (20), determine the maximum allowable leak rates for L_f, L_1, L_2, L_u such that the IPF is achieved.

(g) Determine unit leak rate by dividing allowable leak rates [item (f)] by surface areas [item (e)]. This is the unit leak rate at operating pressure.

(h) Determine the leak test method to be used, and determine the test pressure.

(i) Adjust the allowable unit leak rate for test pressure, in accordance with eq. (15).

SA-B-1234 Sample Problems

Given: A control room complex is provided with a safety-related air cleaning and cooling system. Figure SA-B-1232.2 shows the configuration of the system. During accident conditions, the air cleaning system is required to provide a minimum IPF value of 150.

The air cleaning unit and the air cooling unit are located outside of the protected area (i.e., the habitability envelope) in a contaminated interspace. System parameters are given by Tables SA-B-1232-1 and SA-B-1232-2.

Determine:

Allowable leakage for L_f, L_1, L_2, and L_u to meet or exceed the minimum IPF.

Ductwork and Housing Leakage Classifications

From Fig. SA-B-1410-2, Scheme No. 19, the leakage classes for the recirculation air cleaning system are determined as Class II. Note, since the make-up air is not filtered prior to entering the return duct, the return duct is assigned leakage Class I.

The leakage class of the air conditioning units are, leakage Class I for the negative pressure return air duct (because any inleakage would be unfiltered), and leakage Class II for the positive pressure supply duct (assuming control room pressure boundary requirements can be maintained).

Solution:

For this example, an air cleaning system of 3000 cfm (1416 L/s) flow capacity has been selected based on 1200 cfm (566 L/s) required for pressurization and a ratio of recirculation airflow to outside airflow of 1.5. This ratio has been selected to obtain an initial conservative IPF of 248. For this hypothetical case, a minimum acceptable IPF of 150 will be assumed. In addition to the air cleaning system, the control room also requires a recirculating type air conditioning system with an assumed capacity of 25,000 cfm (11,800 L/s) [approximately 100 tons (351685 W) of cooling capacity]. The exfiltration has been determined to be 1000 cfm (472 L/s) maximum at 0.125 in. wg (0.031 kPa).

The maximum allowable duct leakage that will satisfy the health physics requirements is determined for this example by evaluating the reduction in the IPF. The IPF is used to express the reduction in radioiodine concentration within the control room as a result of filtration and recirculation.

For this example, the IPF is determined using eq. (17):

$$\text{IPF} = \frac{F_1 + nF_2 + F_3}{(1 - n)F_1 + F_3}$$

where

F_1 = filtered outside air, 1200 cfm (566 L/s)
F_2 = filtered recirculated air, 1800 cfm (850 L/s)
F_3 = unfiltered air infiltration, 0 cfm (0 L/s)
n = filtration efficiency/100

Assuming an unfiltered inleakage (through the control room boundary) of zero, since all doors have airlock vestibules, and a filter efficiency of 99% gives:

$$\text{IPF} = \frac{1200 + (0.99)(1800) + 0}{(1 - 0.99)(1200) + 0} \quad 248.5$$

$$\text{IPF} = \frac{566 + (0.99)(850) + 0}{(1 - 0.99)(566) + 0} \quad 248.7$$

For this particular example, a minimum IPF of 150 is required in order to meet the dose requirements of General Design Criterion 19.

In this case, as long as there is no duct leakage, the minimum required IPF is exceeded. However, the

Copyright ASME International
Provided by IHS under license with ASME
No reproduction or networking permitted without license from IHS
Not for Resale

TABLE SA-B-1232-1
CONTROL ROOM AIR CLEANING SYSTEM
PARAMETERS FOR LEAKAGE ANALYSIS

Nodes From–To	Duct Size, in. (mm)	Duct Length, ft (m)	Duct Surface Area, ft² (m²)	Duct Pressure, in. wg (kPa)	Leakage Class
1–2	10 O.D. (254)	50 (15.2)	131 (12.1)*	−1.0 (−0.25)	II
2–3	16 O.D. (406)	20 (6.1)	84 (7.9)*	−2.0 (−0.50)	II
3–4	22 × 12 (559 × 305)	5 (1.5)	28 (2.6)**	+10.0 (2.5)	I
4–5	36 × 84 (914 × 2134)	40 (12.2)	842 (78.2)***	+10.0 (2.5)	I
5–6	22 × 12 (559 × 305)	50 (15.2)	283 (26.3)**	2.0 (0.50)	II
7–2	12 O.D. (305)	75 (22.9)	236 (21.9)*	1.0 (0.25)	I

NOTE:
(1) Housing Dimensions

*Calculated using $A = \pi \frac{(D)}{1000} ld$

**Calculated using $A = \frac{ld}{500} (h + b)$

***Straight conversion, ft^2 to m^2

TABLE SA-B-1232-2
CONTROL ROOM AIR CONDITIONING SYSTEM
PARAMETERS FOR LEAKAGE ANALYSIS

Nodes From–To	Duct Size, in. (mm)	Duct Length, ft (m)	Duct Surface Area, ft² (m²)	Duct Pressure, in. wg (kPa)	Leakage Class
14–8	60 × 30 (1524 × 762) (15.2)	50	750 (69.5)*	−2.0 (−0.50)	I
8–9	60 × 30 (1524 × 762) (7.6)	25	375 (34.7)*	−3.0 (−0.75)	I
9–10	72 × 96 [Note (1)] (1829 × 2438)	10 (3.0)	376 (34.9)	+5.0 (+1.2)	I
10–11	40 × 20 (1016 × 508 (12.2)	40	400 (37.2)*	+4.0 (+1.0)	II
10–12	40 × 20 (1016 × 508) (12.2)	40	400 (37.2)*	+4.0 (+1.0)	II
10–13	26 × 12 (660 × 305) (12.2)	40	250 (23.5)*	+4.0 (+1.0)	II

*Calculated using $A = \frac{ld}{500} (h + b)$

**Straight conversion, ft^2 to m^2

Copyright ASME International
Provided by IHS under license with ASME
No reproduction or networking permitted without license from IHS
Not for Resale

IPF is reduced when the duct inleakage and outleakage are taken into account. Therefore, this must be evaluated to determine if the reduced IPF is still acceptable.

The surface area for the air cleaning duct and housing under negative pressure, which would experience inleakage with subsequent filtration (L_f), is:

Nodes	Surface Area, ft^2 (m^2)
1–2	131 (12.2)
2–3	84 (7.8)
7–2	236 (21.9)
	Total 451 (41.9)

The surface area of the air cleaning system under a positive pressure is:

Nodes	Surface Area, ft^2 (m^2)
3–4	28 (2.6)
4–5	842 (78.2)
5–6	283 (26.3)
	Total 1153 (107.1)

The surface of the air conditioning system under a negative pressure is:

Nodes	Surface Area, ft^2 (m^2)
14–8	750 (69.7)
8–9	375 (34.8)
	Total 1125 (104.5)

The surface area of the air conditioning system under a positive pressure is:

Nodes	Surface Area, ft^2 (m^2)
9–10	376 (34.9)
10–11	400 (37.2)
10–12	400 (37.2)
10–13	250 (23.2)
	Total 1426 (132.5)

For the air cleaning system, we will assume, based on prior test experience and the type of duct construction used, that the unit leak rate, in the operating pressure range specified, will be 0.025 cfm/ft^2. This results in:

$$L_f = 451 \text{ ft}^2 \times 0.025 \text{ cfm/ft}^2 = 11.3 \text{ cfm}$$
$$(0.127 \text{ L/s/m}^2)$$
$$(41.9 \text{ m}^2) \times (0.127 \text{ L/s/m}^2) = (5.32 \text{ L/s})$$

$$L_o1 = 1153 \text{ ft}^2 \times 0.025 \text{ cfm/ft}^2 = 28.8 \text{ cfm}$$
$$(107.1 \text{ m}^2) \times (0.127 \text{ L/s/m}^2) = (13.6 \text{ L/s})$$

$$\text{Air cleaning system net leakage} = L_o1 - L_f$$

$$= 28.8 \text{ cfm} - 11.3 \text{ cfm}$$
$$(13.6 \text{ L/s}) - (5.32 \text{ L/s})$$

$$= 17.5 \text{ cfm}$$
$$(8.28 \text{ L/s}) \text{ exfiltration}$$

For air conditioning systems, assume the leak rate to be 0.07 cfm/ft^2 (0.36 L/s/m^2):

$$L_u = 1125 \text{ ft}^2 \times 0.07 \text{ cfm/ft}^2 = 78.8 \text{ cfm}$$
$$(104.5 \text{ m}^2) \times (0.36 \text{ L/s/m}^2) = (37.6 \text{ L/s})$$

$$L_o2 = 1426 \text{ ft}^2 \times 0.07 \text{ cfm/ft}^2 = 99.8 \text{ cfm}$$
$$(132.5 \text{ m}^2) \times (0.36 \text{ L/s/m}^2) = (47.7 \text{ L/s})$$

$$\text{Net air conditioning system leakage} = L_o2 - L_u$$

$$= 99.8 \text{ cfm} - 78.8 \text{ cfm } (47.7 \text{ L/s}) - (37.6 \text{ L/s})$$

$$= 21 \text{ cfm exfiltration } (10.1 \text{ L/s})$$

With airlock vestibules, $F_3 = 0$; inserting into eqs. (18) and (19) gives:

$$F'_1 = F_1 + (L_f - L_o1)$$

$$= 1200 + (11.3 - 28.8)$$

$$(566) + (5.32 - 13.6)$$

$$= 1182.5 \text{ cfm}$$

$$(557.7 \text{ L/s})$$

$$F'_5 = F_5 + (L_o2 - L_u) - F_3$$

$$= 1000 + (99.8 - 78.8) - 0$$

$$(472 + (47.7 - 37.6) - 0$$

$$= 1021 \text{ cfm}$$

$$(482.1 \text{ L/s})$$

Copyright ASME International
Provided by IHS under license with ASME
No reproduction or networking permitted without license from IHS
Not for Resale

$$IPF = \frac{1021 + (0.99 \times 1800) + 0}{(1 - 0.99)(1182.5) + 0}$$

$$= 237$$

$$IPF = \frac{482.1 + (0.99 \times 850) + 0}{(1 - 0.99)(557.7) + 0}$$

$$= 237$$

Since this is greater than the required IPF with margin, the duct leakage is acceptable.

Based on this analysis, the actual leakage from each duct segment and housing should be calculated, based on actual operating pressure, to determine the actual allowable leakage. This value should then be corrected for test pressure to establish acceptance criteria for duct/housing leak testing.

Subsequently, if actual test results indicated that the inleakage was:

L_f = 50 cfm (23.6 L/s) L_o1 = 30 cfm (14.2 L/s)
L_u = 200 cfm (94.4 L/s) L_o2 = 50 cfm (23.6 L/s)

the IPF would become:

$$F'_1 = 1200 + (50 - 30) = 1220 \text{ cfm}$$
$$(566) + (23.6 - 14.2) = 575.4 \text{ L/s}$$

$$F'_5 = 1000 + (50 - 200) = 850 \text{ cfm}$$
$$(472) + (23.6 - 94.4) = 401.2 \text{ L/s}$$

$$IPF = \frac{850 + (0.99)(1800)}{(1220)(0.01)} = 215.7$$

$$IPF = \frac{401.2 + (0.99)(850)}{(575.4)(0.01)}$$

$$IPF = 216.0$$

which is still above the minimum IPF and still provides a margin.

SA-B-1300 ADDITIONAL LEAKAGE CRITERIA

Additional leakage criteria may be developed to meet plant specific ALARA criteria. Additional criteria may take the form of specifying air cleaning system effectiveness or system quality parameters. It is recommended that the basis for these additional criteria be documented to allow future evaluation of test data. Examples of criteria, which have been previously established in industry standards, are identified below.

SA-B-1310 AIR CLEANING SYSTEM EFFECTIVENESS

One approach to establishing values for allowable leakage rates based on air cleaning system effectiveness is to provide arbitrary values for percent of system flow rate based on leakage classification. (See SA-B-1400.) The values in Table SA-B-1310 have been historically used.

However, these rates may not be representative of actual system design margin since system design flow rates may be established due to nonair cleaning requirements. For these cases, the procedure for establishing unit leakage rates should follow the format used in SA-B-1232.2. Determine the minimum requirements, establish the flow rate tolerance, and proportion across duct surface area.

SA-B-1320 AIR COOLING EFFECTIVENESS

When space temperatures must be maintained to ensure the functioning of nuclear safety-related equipment, the air cooling system design must have sufficient margin to account for allowable pressure boundary leakage. An evaluation to ensure that the maximum space heat gains are accounted for in the design, shall be performed.

SA-B-1330 SYSTEM QUALITY

There may be a desire to establish bench mark leakage rates for various leakage classes, or types of construction, or both, in order to determine quality during the installation process.

The Owner or system designer should establish the leak rate associated with the type of construction by previous test experience, calculation, or by a shop or field test at the beginning of the installation.

The Owner, or his designee, should randomly select sections of ducts or individual housings to leak test in situ. Selection of duct sections may be chosen based on ANSI/ASQC Z1.4 or other equivalent method, however, this is not mandatory.

Copyright ASME International
Provided by IHS under license with ASME
No reproduction or networking permitted without license from IHS
Not for Resale

TABLE SA-B-1310
MAXIMUM ALLOWABLE LEAKAGE FOR AIR CLEANING EFFECTIVENESS
(PERCENT OF RATED FLOW)

Leakage Class [Note (1)]	Duct [Note (2)]	Housing	Total [Note (3)]	Non-ESF Duct [Note (2)]	Housing	Total [Note (3)]
I	0.10	0.10	...	0.50	0.10	0.60
II	1.00	0.20	1.20	5.00	1.00	6.00

NOTES:
(1) Refer to SA-B-1400 for configuration that determines leakage class. Leakage is apportioned to surface area by:

$$L_s = \frac{a}{A} \times \frac{P \times Q}{100}$$

where:
L_s = allowable leakage in duct section, scfm (sL/s)
P = allowable percent leakage
Q = system rated flow (cfm) (L/s)
a = surface area of the duct section, ft^2 (m^2)
A = surface area of the total system ductwork per leakage class, ft^2 (m^2)
$\frac{L_s}{a}$ = the allowable unit leakage by this criteria, cfm/ft^2 ($L/s/m^2$)

(2) All ducts under positive pressure which discharge into the plant stack for high-level release credit shall be leakage Class I.
(3) Assumes housing surface area is 20% of duct surface area. Duct and housing leakages shall be adjusted for actual housing and duct surface area ratios, but the total percent leakage shall not exceed the sum of the listed percent leakages for duct and housing.

SA-B-1400 AIR CLEANING SYSTEM CONFIGURATIONS AND LEAKAGE CLASSES

An air cleaning system can be defined schematically in terms of three spaces and two components.

(a) The three spaces may be either exterior or interior and are:

(1) the contaminated space
(2) the protected space
(3) the interspace
(a) contaminated relative to the air cleaning system located within the interspace.
(b) clean relative to the air cleaning system located within the interspace

(b) The two components are:

(1) fan
(2) air cleaning unit

All spaces noted above represent possible locations for the different parts of the air cleaning system. The contaminated and protected spaces also include the points of system origin and termination respectively. The interspace refers to all other spaces — contaminated or clean — where the air cleaning system or its parts may be located.

SA-B-1410 LEAKAGE CLASSES

Leakage Classes I and II have been assigned to the various sections of each air cleaning system to represent the qualitative effect of leakage on the air cleaning system function. Thus, a leakage Class II classification indicates that due to system configuration and location, a higher leakage rate may be allowable. Conversely, a leakage Class I classification indicates a more stringent leakage rate is required. Leakage classes are shown on Figs. SA-B-1410-1, SA-B-1410-2, and SA-B-1410-3.

Copyright ASME International
Provided by IHS under license with ASME
No reproduction or networking permitted without license from IHS
Not for Resale

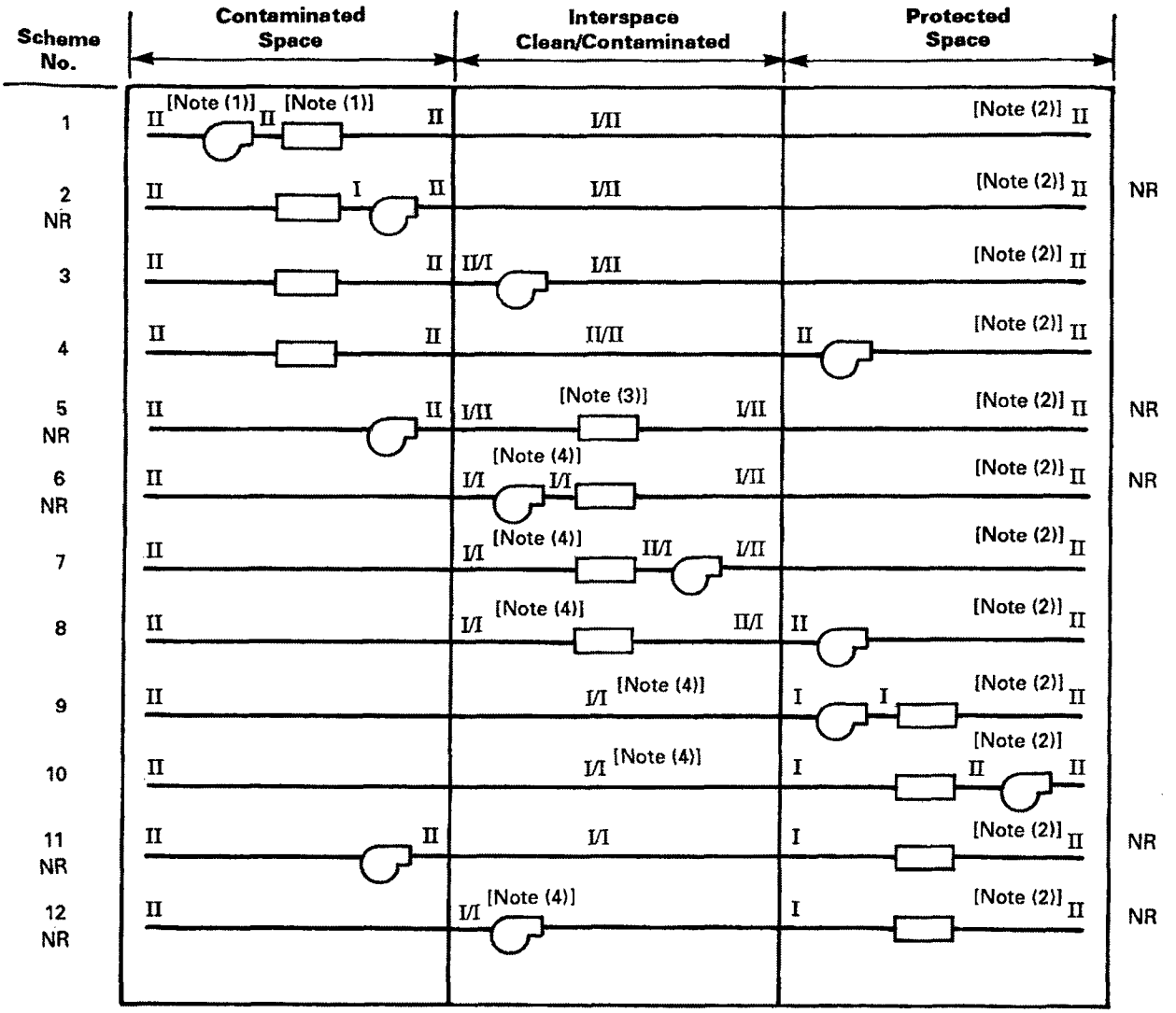

NOTES:

(1) Symbols–
NR — Not recommended
Air Cleaning Unit
Fan

(2) All ducts under positive pressure which discharge into the plant stack for high-level release credit shall be leakage Class I.

(3) Space classification is based on the relative concentration of the space with respect to the duct (e.g. *Contaminated Interspace* means concentration within space is greater than duct or housing at that point). Thus, as duct concentration changes due to filtration, the space classification will change in a given area.

(4) Noted duct sections which pass through a Clean Interspace and which are under a negative pressure for all modes of operation may be leakage Class II.

FIG. SA-B-1410-1 SINGLE-PASS AIR CLEANING SYSTEM CONFIGURATION

Copyright ASME International
Provided by IHS under license with ASME
No reproduction or networking permitted without license from IHS
Not for Resale

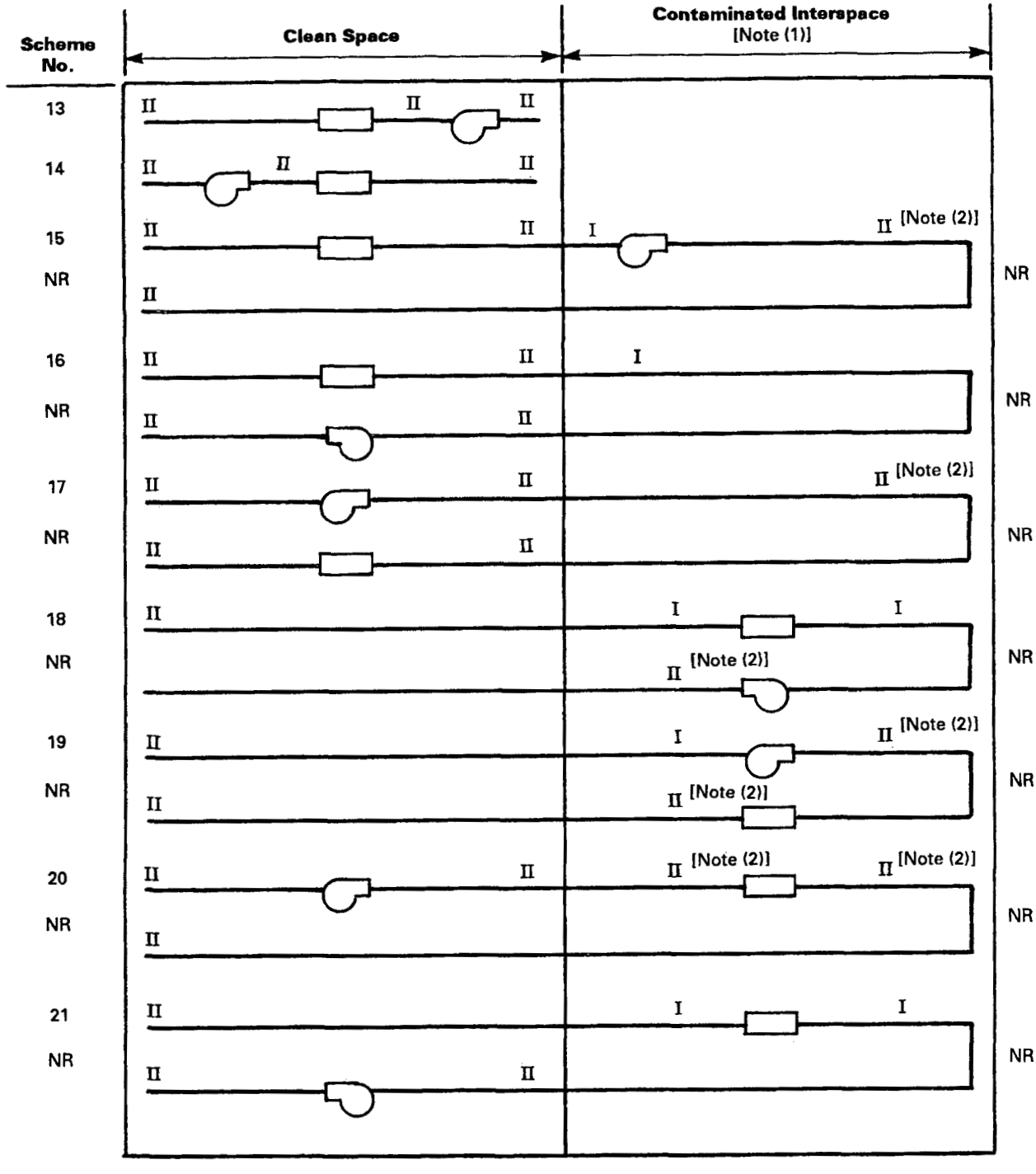

NOTES:
(1) Contamination level of fluid within ductwork < contamination level of interspace.
(2) Leakage Class I shall be used if ductwork is under negative pressure with respect to interspace during normal or transient system operation.

FIG. SA-B-1410-2 RECIRCULATING AIR CLEANING SYSTEM CONFIGURATIONS

Copyright ASME International
Provided by IHS under license with ASME
No reproduction or networking permitted without license from IHS
Not for Resale

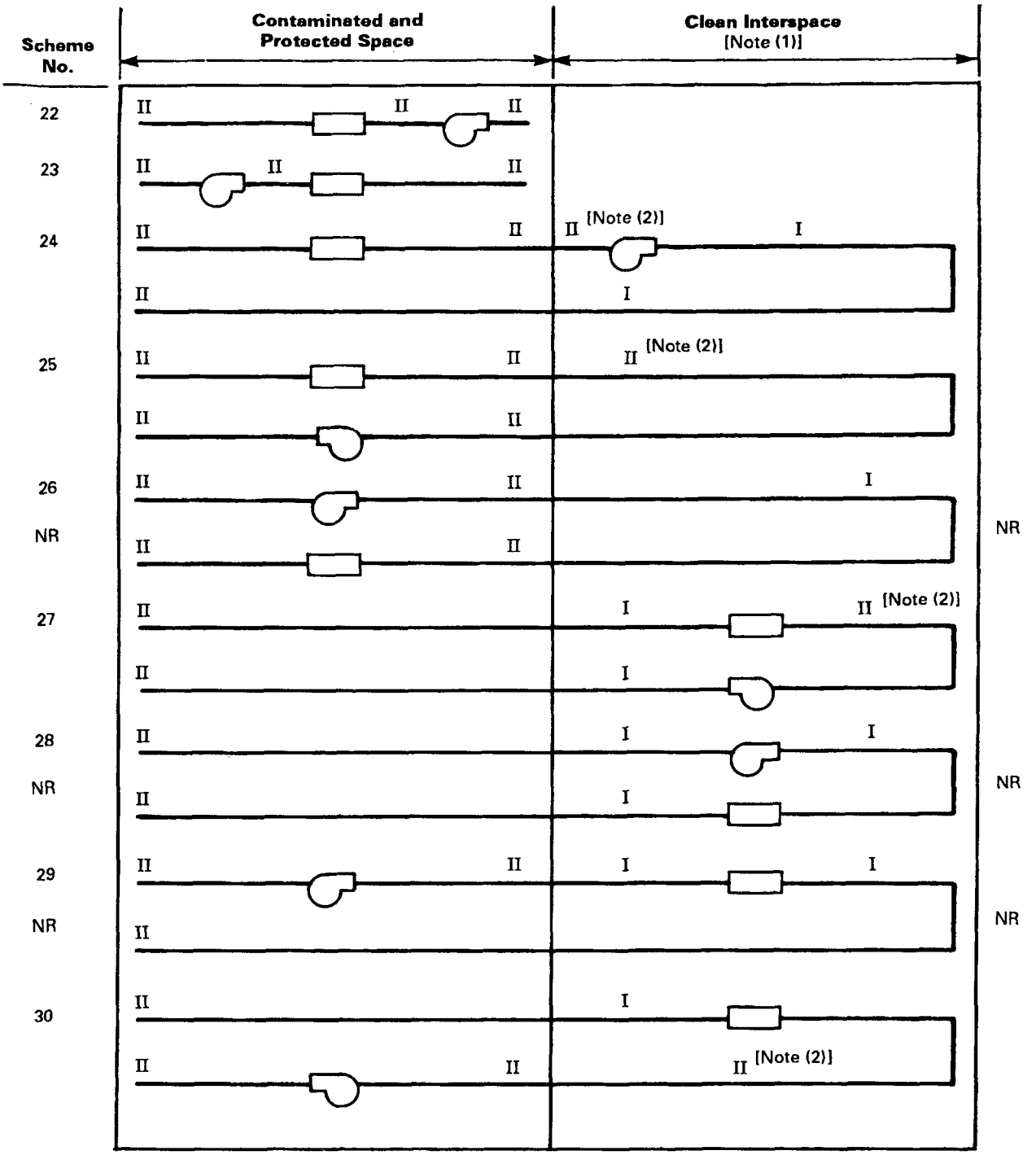

NOTES:

(1) Contamination level of fluid within ductwork > > contamination level of interspace.

(2) Leakage Class I shall be used if ductwork is under positive pressure with respect to interspace during normal or transient system operation.

FIG. SA-B-1410-3 RECIRCULATING AIR CLEANING SYSTEM CONFIGURATIONS

Copyright ASME International
Provided by IHS under license with ASME
No reproduction or networking permitted without license from IHS
Not for Resale

NONMANDATORY APPENDIX SA-C
ADDITIONAL GUIDELINES FOR DUCT DESIGN AND CONSTRUCTION

ARTICLE SA-C-1000

SA-C-1100 FUNCTIONAL DESIGN

Procedures and data for sizing of ductwork to provide the desired air quantities and distribution are presented in the ASHRAE Handbook, Fundamentals 1989, and in the SMACNA HVAC Duct System Design manual. Principles of room-air distribution and duct system layout are also described in those publications. Exhaust system concepts are described in Industrial Ventilation, 20th Edition, 1988 published by the American Conference of Governmental Industrial Hygienists.

SA-C-1200 GENERAL

SA-C-1210 ACCESS DOORS

SA-C-1211 General

(a) Seals

(1) Gaskets should be installed on door and a "knife-edge" sealing surface for the gasket should be provided. Gasket should be neoprene or silicone rubber with a recommended 30-40 "Shore A Durometer." Spacing shall enable a compression of at least 50% of nominal gasket thickness and provide a gasket compression uniformity of 20%.

(2) The gasket should be installed in as few pieces as possible to minimize number of joints. Gasket joints should be dove-tailed-type to prevent leakage due to misfitting butt joints.

(3) The gasket should be protected from possible damage when the door is opened by installing gasket within a channel or with a metal bar between door edge and gasket to protect it in an equivalent manner.

(b) Hinges and Latches

(1) Latches shall seal in less than 270 deg motion. Latches shall not have more than one handle per location; that is, there shall not be a handle to position the inside clamp and a separate handle to tighten the clamp down.

(2) Latches shall be configured so that when open, gravity will hold them in the open position.

(3) Latch assemblies shall have a minimum number of components and be designed so no loose components can fall off.

(c) Additional Guidance

(1) Sufficient clearance should be provided so that doors can be opened to enable access for testing, component replacement, repair, or inspection.

(2) Drawings for each type and size of door should be submitted to the Owner for review prior to fabrication. Door drawings should show location and details of hinges, latching lugs, and gaskets.

SA-C-1220 DRAINS

The number of normally open drains should be kept to a minimum (i.e., drains should be manually valved off when not needed during operation) to reduce the possibilities of degrading the pressure boundary or bypassing the air cleaning unit or filter banks.

(a) Air bypass can occur around filtration components;

(b) Cooling/heating coil capacity is negatively impacted; or

Copyright ASME International
Provided by IHS under license with ASME
No reproduction or networking permitted without license from IHS
Not for Resale

(c) Contaminated (radioactive or otherwise) air is transferred through the piping to a protected environment (either into or out of housing).

Drain lines shall be valved, sealed, trapped, or otherwise protected to prevent the following adverse conditions:

Traps or loop seals when used should be designed for the maximum operating (static) pressure the duct may experience during system startup, normal operation, system transients, or system shutdown. Provision should be made for manual or automatic fill systems to ensure water loop seals do not evaporate. If manual filling is utilized, a periodic inspection or filling procedure shall be implemented. A sight glass should be considered to aid in inspection. The same applies if a local sump is included in the design.

The drain system should be designed so that unacceptable backup of liquids into the duct will not occur. Hydraulic calculations should be prepared to document this feature of drain system design. Provision should be made in plant radwaste system to treat maximum coincident flow rate.

Initial testing of the drain system should be performed by the Owner on site, after installation, to demonstrate operability.

When shutoff valves or check valves are utilized, they should be initially tested on site, after installation, and periodically thereafter for operability and leakage.

Valve leakage should be considered as part of the allowable housing leakage criteria derived in para. 4.14.

SA-C-1230 DUCT

Round duct is generally preferred because it is stronger (particularly when internal pressures are negative and collapse would be the failure mode), is frequently more economical for high pressure construction, and is easier to join and seal than rectangular duct. However, round duct occupies more space than rectangular duct, and it is more difficult to fabricate some types of round branch fittings.

Additional duct design guidance is given in Nonmandatory Appendix AA-D.

TABLE SA-C-1300

SMACNA Manuals	Max. Design Static Pressure, in. wg	
	Positive	Negative
HVAC Duct Construction Standards	10 (2.5 kPa)	3 (.75 kPa)
Round Industrial Duct Construction Standards	30 (7.5 kPa)	30 (7.5 kPa)
Rectangular Industrial Duct Construction Standards	30 (7.5 kPa)	30 (7.5 kPa)

SA-C-1240 ACCESS FOR SERVICE, TESTING, AND INSPECTION

Ducts that will have to be cleaned out periodically should be equipped with low-leakage access hatches at strategic points.

SA-C-1300 DUCT CONSTRUCTION STANDARDS

Table SA-C-1300 lists standards that may be used in the mechanical design of ductwork. The SMACNA HVAC Duct Construction Standards contain design data for both indicated in the Table. Although design data in the SMACNA Round and Rectangular Industrial Duct Construction Standards have been developed for negative-pressure applications, they may also be used for positive-pressure design. Positive-pressure designs using the HVAC Duct Construction Standards are less conservative than positive pressure designs using the Round and Rectangular Industrial Duct Construction Standards.

When using either the Round or Rectangular Industrial Duct Construction Standards for nuclear power plant system design, the system may be considered as "Class 1," as defined by SMACNA.

These duct design references do not incorporate structural design requirements. Guidance given in these references must be evaluated for structural capability and revised as necessary to meet the requirements of Article SA-4000 and the nuclear facility specific parameters.

Copyright ASME International
Provided by IHS under license with ASME
No reproduction or networking permitted without license from IHS
Not for Resale

SECTION HA
HOUSINGS

HA-1000	**Introduction**	194
HA-1100	Scope	194
HA-2000	**Referenced Documents**	197
HA-3000	**Materials**	199
HA-3100	Allowable Materials	199
HA-3200	Special Limitations on Materials	199
HA-3300	Certification of Material	199
HA-4000	**Design**	202
HA-4100	General Design	202
HA-4200	Design Criteria	202
HA-4300	Housing Joints and Seams	204
HA-4400	Accessories	205
HA-4500	Pressure Boundary Leakage	207
HA-4600	Design Specification	207
HA-5000	**Inspection and Testing**	209
HA-5100	General	209
HA-5200	Inspection	209
HA-5300	Pressure Boundary Leakage Testing	210
HA-5400	Mounting Frame to Housing Leakage Test	210
HA-5500	Structural Capability Tests	210
HA-5600	Airflow Distribution Tests	211
HA-5700	Air-Aerosol Mixing Uniformity Tests	211
HA-5800	Sampling Manifold Testing	211
HA-5900	Air Conditioning and Air Handling Unit Testing	211
HA-6000	**Fabrication**	212
HA-6100	General	212
HA-6200	Fabrication Process	212
HA-6300	Mechanical Fastening	213
HA-6400	Fabrication Tolerances	213
HA-6500	Cleaning	213

Copyright ASME International
Provided by IHS under license with ASME
No reproduction or networking permitted without license from IHS
Not for Resale

HA-7000	**Packaging, Shipping, Receiving, Storage, and Handling**	214
HA-7100	General	214
HA-7200	Packaging	214
HA-7300	Shipping	214
HA-7400	Receiving	214
HA-7500	Storage	214
HA-8000	**Quality Assurance**	215
HA-8100	General	215
HA-8200	Material Identification	215
HA-8300	Drawings and Documentation	215
HA-9000	**Nameplates and Stamping**	216
HA-9100	General	216

Figures

HA-1120-1	Housing, Air Cleaning Unit: Walk-in Type	195
HA-1120-2	Housing, Air Cleaning Unit: Side-Access Type	195
HA-1120-3	Housing, Air Conditioning Unit: Walk-in Type	196

Tables

HA-3110	Allowable Materials	200
HA-4212	Load Combinations	203

Nonmandatory Appendices

HA-A	Division of Responsibility	217
HA-B	Additional Guidelines for Housing Design and Construction	218
HA-C	Manifold Design Guidelines	220
HA-D	Performance Test for Qualification of Sampling Manifolds	229

Copyright ASME International
Provided by IHS under license with ASME
No reproduction or networking permitted without license from IHS
Not for Resale

ARTICLE HA-1000
INTRODUCTION

HA-1100 SCOPE

This section provides requirements for the design, construction, performance, fabrication, inspection, acceptance testing, and quality assurance for housings and housing supports in nuclear safety-related air treatment systems.

HA-1110 PURPOSE

The purpose of this section is to ensure that the housings have acceptable design, performance, and construction.

HA-1120 APPLICABILITY

This section applies to housings containing air cleaning, air handling, and air conditioning components. Internal components of housings including, but not necessarily limited to, HEPA filters, refilters, adsorbers, moisture separators, cooling and heating coils, dampers, mounting frames, and fans are covered in other Division II Code sections.

This section does not apply to sizing of housings, nor does it apply to the design of the nuclear air cleaning, air conditioning, or air handling systems in which the housings are installed.

Housing interface boundaries, as applied to this section are shown on Figs. HA-1120-1, HA-1120-2, and HA-1120-3. Interface boundaries occur between housing penetrations and external piping, instrumentation, and conduit. Interface boundaries also occur between internal and external components and structural support members directly attached to the housing.

HA-1130 DEFINITIONS AND TERMS

The definitions and terms described below are specific to this section. For other definitions and terms, see AA-1130.

air cleaning unit: a self-contained assembly that includes all components whose primary function is to remove particulate matter (filter) or gas phase contaminants such as radioactive iodine (adsorber). A unit includes a housing plus internal air cleaning components. An air cleaning unit may be walk-in or side-load-type design.

air conditioning unit: a self-contained assembly of all components whose primary function is to change air temperature or relative humidity. Unit may include housing, fan(s), heating and/or cooling coil(s), filters, etc.

air handling unit: a self-contained assembly of all components whose primary function is to move air. Units that perform both cleaning and handling shall be classified as air cleaning.

housing: the portion of an air cleaning, air conditioning, or air handling unit that encloses, and provides access to their respective components, and provides connections to adjacent ductwork, instrumentation, and ancillary systems.

manifold: a device to uniformly disperse test agent over a defined area from a single pipe or tube or to uniformly collect test agent mixed with air from a defined area into a single pipe or tube.

Copyright ASME International
Provided by IHS under license with ASME
No reproduction or networking permitted without license from IHS
Not for Resale

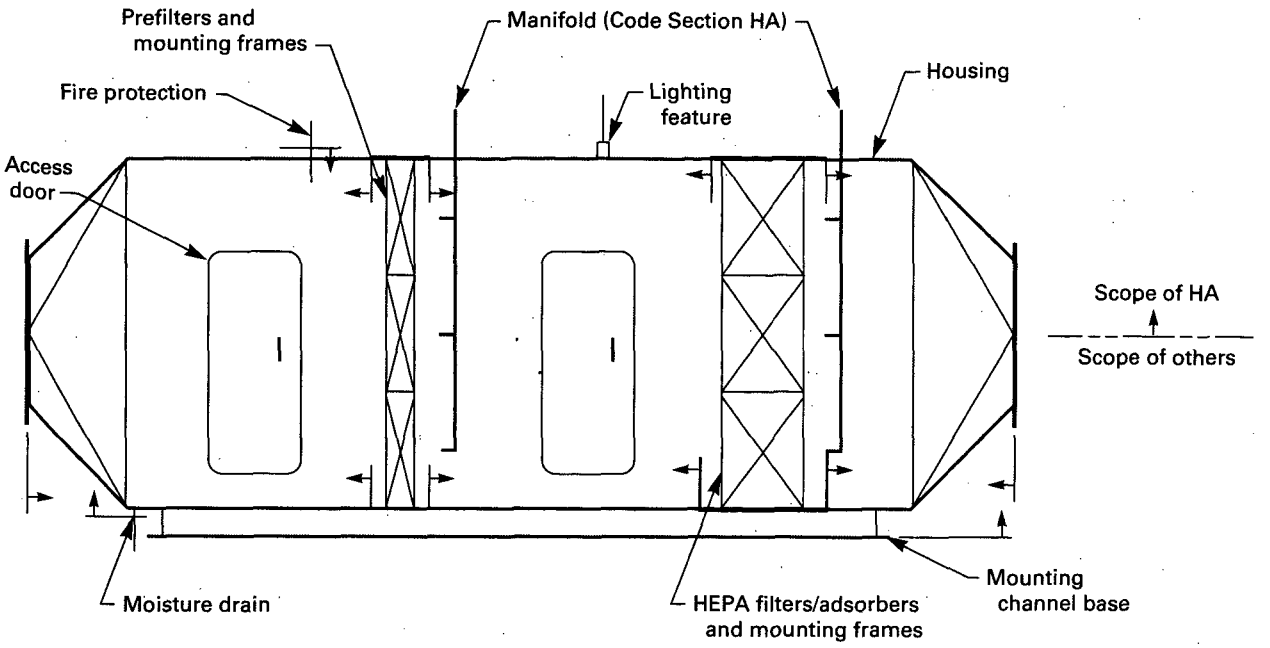

FIG. HA-1120-1 HOUSING, AIR CLEANING UNIT: WALK-IN TYPE

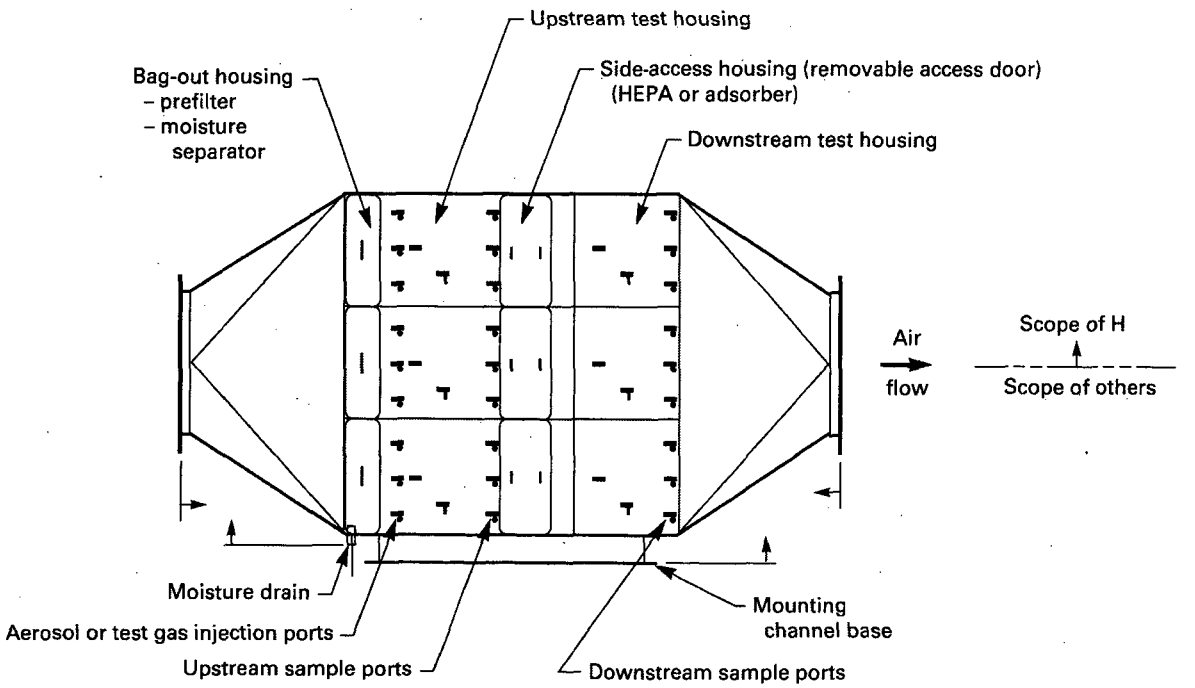

FIG. HA-1120-2 HOUSING, AIR CLEANING UNIT: SIDE-ACCESS TYPE

Copyright ASME International
Provided by IHS under license with ASME
No reproduction or networking permitted without license from IHS
Not for Resale

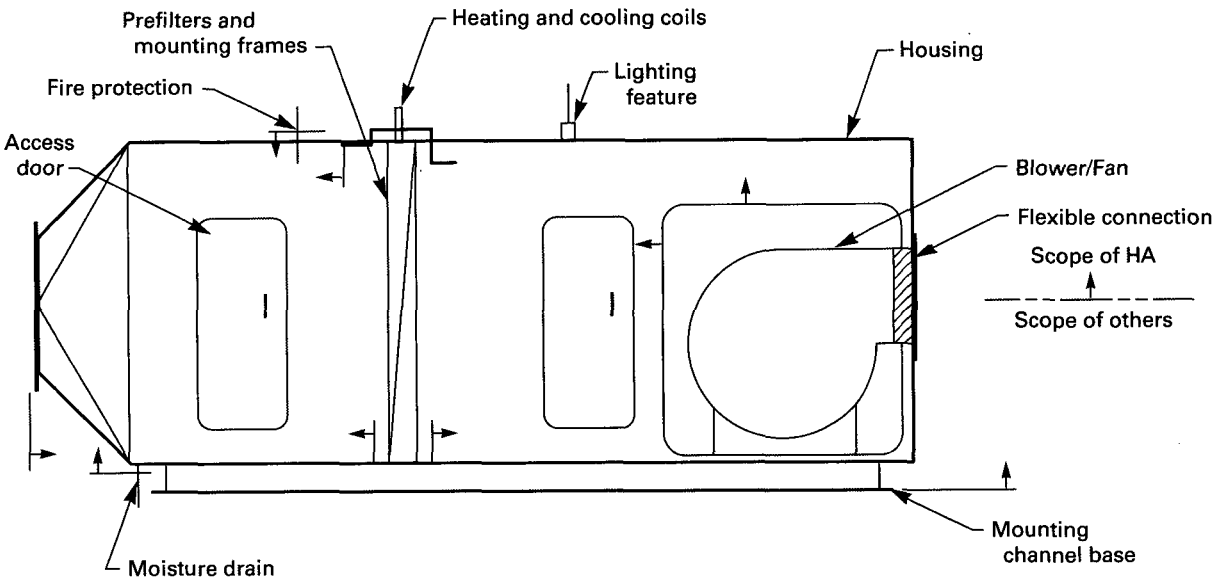

FIG. HA-1120-3 HOUSING, AIR CONDITIONING UNIT: WALK-IN TYPE

Copyright ASME International
Provided by IHS under license with ASME
No reproduction or networking permitted without license from IHS
Not for Resale

ARTICLE HA-2000
REFERENCED DOCUMENTS

The effective date of edition for references listed below shall be as specified in Article AA-2000, the date of edition invoked by the design specification, or as given below.

American Institute of Steel Construction (AISC) Specification for the Design, Fabrication, and Erection of Structural Steel for Buildings, Ninth Edition

Publisher: American Institute of Steel Construction (AISC), One East Wacker Drive, Chicago, IL 60601-2001

ASME N509-1989, reaffirmed December 9, 1996, Nuclear Power Plant Air-Cleaning Units and Components

ASME Boiler & Pressure Vessel Code, 1995 Edition with the 1997 Addenda, Section IX, Welding and Brazing Qualification

Publisher: The American Society of Mechanical Engineers (ASME International), Three Park Avenue, New York, NY 10016-5990, Order Department: 22 Law Drive, Box 2300, Fairfield, NJ 07007-2300

ASHRAE Handbook of Fundamentals, 1997 Edition

Publisher: American Society of Heating, Refrigerating, and Air Conditioning Engineers, Inc. (ASHRAE), 1791 Tullie Circle, NE, Atlanta, GA 30329

ASTM D5144–1997, Standard Guide for Protective Coating Standards in Nuclear Power Plants

ASTM D1056-91, Standard Specification for Flexible Cellular Materials–Sponge or Expanded Rubber

ASTM A-370–1997, Test Methods and Definitions for Testing Steel Products

ASTM D2240–1997, Test Method for Rubber Properties

Publisher: American Society for Testing and Materials (ASTM), 100 Barr Harbor Drive, West Conshohocken, PA 19428-2959

AWS D1.1, 1998 Structural Welding Code for Steel

AWS D1.3, 1989 Structural Welding Code for Sheet Steel

AWS D9.1, 1990 Specification for Welding of Sheet Metal

Publisher: American Welding Society (AWS), 550 NW Le Jeune Road, Miami, FL 33126

HVAC Duct Construction Standards — Metal and Flexible, 1996

Rectangular Industrial Duct Construction Standards, 1980

Round Industrial Duct Construction, 1977

Publisher: Sheet Metal and Air Conditioning Contractors' National Association (SMACNA), 4201 Lafayette Center Drive, Chantilly, VA 20151-1209

IES Lighting Handbook, Eighth Edition, 1993

Publisher: Illuminating Engineering Society of North America (IESNA), 120 Wall Street, New York, NY 10005

Industrial Ventilation 23rd Edition

Publisher: American Conference of Governmental Industrial Hygienists (ACGIH), 1330 Kemper Meadow Drive, Cincinnati, OH 45240

Manual of Steel Construction, Allowable Stress Design, Ninth Edition

Nuclear Air Cleaning Handbook — Design, Construction, and Testing of High Efficiency Air Cleaning Systems for Nuclear Applications, C. Burchsted, Kahn, and Fuller, ERDA-76-21

Publisher: American Institute of Steel Construction (AISC), One East Wacker Drive, Chicago, IL 60601-2001

NFPA 90 A, 1996, "Installation of Air Conditioning & Ventilation Systems"

Publisher: National Fire Protection Association (NFPA), 1 Batterymarch Park, Quincy, MA 02269-9101

Specification for the Design of Cold-Formed Steel Structural Members, 1996 Edition

Copyright ASME International
Provided by IHS under license with ASME
No reproduction or networking permitted without license from IHS
Not for Resale

Publisher: American Iron and Steel Institute (AISI), 200 Town Center, Southfield, MI 48075

201-90, "Fans and Systems"

Publisher: Air Movement and Control Association, Inc. (AMCA), 30 West University Drive, Arlington Heights, IL 60004-1893

Copyright ASME International
Provided by IHS under license with ASME
No reproduction or networking permitted without license from IHS
Not for Resale

ARTICLE HA-3000
MATERIALS

HA-3100 ALLOWABLE MATERIALS

HA-3110 GENERAL REQUIREMENTS

(a) Material used shall have properties and composition suitable for the application as defined by the design specification and the service conditions, as defined in AA-4213. Materials shall be in conformance with the ASME and the ASTM materials listed in Table HA-3110. Substitute materials shall be equivalent to or exceed the requirements in Table HA-3110. Substitute materials shall be approved by the Owner or designee.

(b) Materials that are part of the pressure boundary or equipment support shall meet the structural requirement of Article HA-4000.

(c) Materials expressly prohibited or limited shall be explicitly described in the design specification.

HA-3111 Protective Coatings

All carbon steel surfaces shall be painted to protect against corrosion and to facilitate cleaning and decontamination. Coatings shall comply with the requirements of AA-6500 and ASTM D5144. Coatings shall meet radiation resistance, chemical resistance, and decontamination requirements in accordance with the design specification. Stainless steel (galvanized), bronze, copper, aluminum, and glass surfaces are not required to be coated.

HA-3200 SPECIAL LIMITATIONS ON MATERIALS

HA-3210 METALS

HA-3211 Physical Properties

Changes in the physical properties of metals at minimum and maximum design temperatures must be recognized and factored into the design of housings.

HA-3212 Galvanic Corrosion

The possibility of galvanic corrosion due to the relative potentials of aluminum, copper, and their alloys should be considered when used in conjunction with each other, or with steel or other metals and their alloys.

HA-3213 Corrosive Vapors

Aluminum and zinc shall not be used in the presence of corrosive vapors unless protected by coatings designed to prevent deterioration of the metal. Protective measures other than coating shall be approved by the Owner or designee.

HA-3214 Nonmetallic Materials

The use of nonmetallic materials such as plastics, elastomers, and similar substances is permitted in the construction of housings provided that in the selection of these materials, consideration is given to:

(a) emission of toxic vapors

(b) degradation of properties caused by temperature extremes, radiation exposure, chemical exposure, and aging; and

(c) maintainability.

HA-3215 Deterioration of Materials in Service

It is the responsibility of the Owner or designee to identify the environment in which housings must operate so that the Manufacturer can select the grade of materials to meet the conditions stated in the design specification.

HA-3300 CERTIFICATION OF MATERIAL

For structural and pressure boundary materials, the supplier shall make available certified test reports of

Copyright ASME International
Provided by IHS under license with ASME
No reproduction or networking permitted without license from IHS
Not for Resale

chemical and physical properties. For those ASTM materials which do not have physical testing required by the ASTM specification, tensile testing shall be performed per ASTM A370.

All other materials used in the construction of housings shall be provided with a manufacturer's Certificate of Compliance covering the ASME, ASTM, or other material specification, grade, and class, if applicable.

TABLE HA-3110
ALLOWABLE MATERIALS

ASME Designator	ASTM Designator	Publication Title
Plate, Sheet, and Strip		
...	A 167	Stainless and Heat-Resisting Chromium-Nickel Steel Plate, Sheet, and Strip
SA-240	A 240	Heat-Resisting Chromium and Chromium-Nickel Stainless Steel Plate, Sheet, and Strip for Pressure Vessels
SA-36	A 36	Structural Steel
...	A 283	Low- and Intermediate-Tensile Strength Carbon Steel Plates
...	A 284	Pressure Vessel Plates, Carbon Steel, Low and Intermediate Strength
...	A 366	Steel, Carbon, Cold-Rolled Sheet, Commercial Quality
SA-414	A 414	Carbon Steel Sheet for Pressure Vessels
...	A 446	Steel Sheet, Zinc-Coated (Galvanized) by the Hot-Dip Process, Structural (Physical Quality)
...	A 525	Steel Sheet, Zinc-Coated (Galvanized) by the Hot-Dip Process, General Requirements
...	A 526	Steel Sheet, Zinc-Coated (Galvanized) by the Hot-Dip Process, Commercial Quality
...	A 527	Steel Sheet, Zinc-Coated (Galvanized) by the Hot-Dip Process, Lock-Form Quality
...	A 568	General Requirements for Steel, Carbon, and High-Strength, Low-Alloy, Hot-Rolled Sheet and Cold-Rolled Sheet
...	A 569	Steel, Carbon (0.15 max, %), Hot-Rolled Sheet and Strip, Commercial Quality
...	A 570	Hot-Rolled Carbon Steel Sheet and Strip, Structural Quality
...	A 611	Steel, Cold-Rolled Sheet, Carbon, Structural
...	A 620	Steel, Sheet, Carbon Drawing Quality, Special Killed, Cold-Rolled
...	A 621	Steel Sheet and Strips, Carbon, Hot-Rolled, Drawing Quality
...	A 635	Steel Sheet and Strips, Heavy Thickness Coils, Carbon, Hot-Rolled
...	A 642	Steel Sheet, Zinc Coated (Galvanized) by the Hot-Dip Process, Drawing Quality, Special Killed
...	A 666	Austenitic Stainless Steel Sheet, Strip, Plate, and Flat Bar for Structural Applications
SB-209	B 209	Aluminum and Aluminum-Alloy Sheet and Plate
	B 16	Standard Specification for Free-Cutting Brass Rod, Bar, and Shapes for Screw Machines
	B 140	Standard Specification for Copper-Zinc-Lead (Leaded Red Brass or Hardware Bronze) Rod, Bar, and Shapes
Structural Bar and Shapes		
SA-36	A 36	Structural Steel
...	A 108	Steel, Bar, Carbon, Cold-Finished, Standard Quality
...	A 276	Stainless and Heat-Resisting Steel Bars and Shapes
...	A 493	Stainless and Heat-Resisting Steel for Cold-Heading and Cold-Forging Bar and Wire
...	A 500	Cold-Formed Welded and Seamless Carbon Steel Structural Tubing in Round and Shapes
...	A 501	Hot-Formed Welded and Seamless Carbon Steel Structural Tubing
...	A 576	Steel Bars, Carbon, Hot-Wrought, Special Quality
Hardware		
SA-182	A 182	Forged or Rolled Alloy-Steel Pipe Flanges, Forged Fittings, Valves, and Parts for High Temperature

Copyright ASME International
Provided by IHS under license with ASME
No reproduction or networking permitted without license from IHS
Not for Resale

TABLE HA-3110
ALLOWABLE MATERIALS (CONT'D)

ASME Designator	ASTM Designator	Publication Title
Hardware (Cont'd)		
SA-193	A 193	Alloy-Steel and Stainless Steel Bolting Material for High-Temperature Service
SA-194	A 194	Carbon and Alloy-Steel Nuts for Bolts for High-Pressure and High-Temperature Service
SA-307	A 307	Carbon Steel Bolts and Studs, 60,000 psi Tensile Strength
SA-325	A 325	High-Strength Bolts for Structural Steel Joints
SA-403	A 403	Wrought Austenitic Stainless Steel Piping Fittings
SA-449	A 449	Quenched and Tempered Steel Bolts and Studs
. . .	A 548	Steel Wire, Carbon, Cold-Heading Quality, for Tapping or Sheet Metal Screws
. . .	A 563	Carbon Steel Nuts ANSI B18.21.1 Lock Washers ANSI B18.22.1 Flat Washers
. . .	F 467	Nonferrous Nuts for General Use
ANSI B18.21.1		Lock Washers
ANSI B18.22.1		Flat Washers
Pipe and Tube		
. . .	A 53	Pipe, Steel, Black and Hot-Dipped, Zinc Coated, Welded and Seamless
. . .	A 450	General Requirements for Carbon, Ferritic Alloy, and Austenitic Alloy Steel Tubes
	A 511	Seamless Stainless Steel Mechanical Tubing
	A 554	Welded Stainless Steel Mechanical Tubing
	A 312	Standard Specification for Seamless and Welded Austenitic Stainless Steel Pipes
	A 376	Standard Specification for Seamless Austenitic Stainless Steel Pipe for High-Temperature Central-Station Service
	A 632	Seamless and Welded Austenitic Stainless Steel Tubing (Small Diameter) for General Service
ANSI C80.3		Electrical Metallic Tubing Zinc-Coated
Coatings		
	D 5144	Standard Guide for Protective Coating Standards in Nuclear Power Plants
Gaskets		
	ASTM D2000	Neoprene Class BC
	ASTM D1056	Silicone Rubber

Copyright ASME International
Provided by IHS under license with ASME
No reproduction or networking permitted without license from IHS
Not for Resale

ARTICLE HA-4000
DESIGN

HA-4100 GENERAL DESIGN

Housings shall be designed in accordance with the requirements of Article AA-4000 and this section. The design shall incorporate requirements for structural strength, rigidity, and sealing surfaces to provide leak-tightness of internal mounting frames to the housing. Decontamination requirements shall be specified by the Owner or designee in the design specification.

HA-4200 DESIGN CRITERIA

HA-4210 LOAD CRITERIA

HA-4211 Loads

Loads to be considered in the structural design of housings are listed in AA-4211 with the following additions and clarifications.

component load (CL): the force of the internally mounted components imposed on the housing. CL is separated into four portions: deadweight, normal operating pressure differential (NOPD) for the particular component, OBE, and SSE. Additional dynamic loads (ADL) will be provided by the design specification as applicable.

deadweight (DW): the weight of the housing members excluding the deadweight of internal equipment such as HEPA filters and their respective mounting frames. DW includes sheet metal panels, door panels, frame members, and stiffeners.

design pressure differential (DPD): the dynamic external pressure load resulting from a design basis accident (DBA), intermediate break accident (IBA), or small break accident (SBA). Housings should be located outside the local pipe break affected area. If housings are subjected to these loads, the design specification (HA-4600) shall address the specific design requirements considering a Level D load combination.

external load (EL): as defined in AA-4211.

fluid momentum load (FML): as defined in AA-4211. Housing internal components shall be designed to withstand FML resulting from air turbulence from fan discharges into the housing. The housing portion where this load is significant is determined by the length required to regain uniform airflow as given by AMCA 201, Fig. 3-3.

hydrostatic load (HL): shall be added to the deadweight (DW) case as applicable. These loads are from accumulated condensate, water deluge systems, moisture separators, and associated housing flooding. The hydrostatic load shall be established by documented analysis based on housing internal configuration and component function.

live load (L): includes a construction mainload of 250 lb on the roof of the housing. Housing sheet metal floors shall be designed for at least a 50 psf live load when no other floor system is provided (e.g., grating, concrete slab).

normal operating pressure differential (component) ($NOPD_c$): the opening pressure differential across the component from upstream to downstream of the component included in the housing. See applicable Division II component sections for all component NOPD's.

normal operating pressure differential (housing) ($NOPD_h$): the maximum pressure differential between inside the housing and external to the housings. For ease of design, a housing may be designed using one pressure value that envelopes SOPT and NOPD.

seismic loads (SL): loads that are the result of the envelope of the operating basis earthquake (OBE) and the safe shutdown earthquake (SSE). As an option, the OBE and SSE may be considered separately with the OBE loads used for the level B load combination. Both orthogonal components of horizontal and vertical components of the seismic excitation shall be applied simultaneously in the direction that will produce worst-

Copyright ASME International
Provided by IHS under license with ASME
No reproduction or networking permitted without license from IHS
Not for Resale

TABLE HA-4212
LOAD COMBINATIONS

Service Level	Load Combination
A	N + T + L + CL + W
B	Not required, see Level C
C	N + T + L + CL + SL + ADL
D	If DPD Applicable, N + DPD + SSE + ADL

case stresses and deflections. These components may be combined by the square root of the sum of the squares (SRSS) method.

system operational pressure transient (SOPT): as defined in AA-4211 or may be enveloped with $NOPD_h$ and $NOPD_c$.
T and *N*: defined in AA-4211.

For other component load criteria, see the following sections and/or other applicable Division II Code sections:

(a) HEPA filters: FC-4300
(b) Type II adsorbers: FD-4400
(c) Type III adsorbers: FE-4400
(d) Mounting Frames: FG-4200
(e) Dampers: Article DA-4000
(f) Moisture Separators: Article FA-4000
(g) Prefilters: Article FB-4000
(h) Coils: Article CA-4000
(i) Fans: Article BA-4000
(j) Ductwork: SA-4200
(k) Type IV adsorbers: FH-4300

HA-4212 Load Combinations

The applicable loads are given in Table HA-4212.

HA-4213 Service Conditions

The requirements of AA-4213 apply.

HA-4214 Design and Service Limits

The requirements of AA-4214 apply.

HA-4215 Housing Supports

Housing supports shall be designed per the loads and load combinations in HA-4211 and HA-4212. The stress criteria for each load combination shall be per HA-4220.

Floor-mounted housing supports shall be designed to act as an integral base of the housing. Anchorage to the floor shall be designed to transfer the lateral forces without overturning or deforming the housing unit. Units with internal mounting frames where leakage is a design consideration, shall have floor anchorages near the junction of the mounting frame and base. Smaller units, which are typically provided with the base from the vendor's facility, shall be designed for the installation/erection loads associated with a package unit. Larger units that are installed using modular construction need only consider the installation loads associated with each piece.

HA-4220 STRESS CRITERIA

The allowable stresses for housing sheet metal material and cold-formed members shall be as defined in the AISI *Specification for the Design of Cold-Formed Steel Structural Members.* The allowable stresses for hot-rolled shapes and plates shall be as defined in the AISC *Specification for the Design, Fabrication and Erection of Structural Steel for Buildings.*

The basic general membrane design stress for the Service Level A condition shall not exceed 0.6 F_y and shall be reduced as appropriate to consider lateral-torsional buckling of bending members and effective lengths of compression members. The basic general membrane design stress for the Level C condition shall not exceed 1.2 × 0.6 F_y per AA-4321.

The combined membrane and bending design stress for Service Level A shall not exceed 1.5 × 0.6 F_y and shall be reduced as appropriate to consider lateral-torsional buckling of bending members and effective lengths of compression members. The combined membrane and bending design stress for the Level C condition shall not exceed 1.8 × 0.6 F_y per AA-4321.

HA-4230 DEFLECTION CRITERIA

HA-4231 Deflection Limits

The deflection limits shall be specified in the design specification and shall be in accordance with AA-4231.

HA-4232 Deflection Limits for Mounting Frames and Equipment Interfaces

For walk-in housings, the deflection limits for the mounting frames shall also be considered at the interface between the frame and the housing.

Copyright ASME International
Provided by IHS under license with ASME
No reproduction or networking permitted without license from IHS
Not for Resale

For deflection limitations of other equipment (e.g., fans, dampers, ductwork) see the applicable Division II Code sections.

HA-4240 OTHER CRITERIA

HA-4241 Vibration Isolation

Vibration isolation requirements shall be specified by the Owner or designee in the design specification.

HA-4242 Provisions for Relative Movement

Clearance shall be provided to allow for relative movement of the internal equipment during operation and maintenance of the equipment.

HA-4243 Tolerances

Tolerances shall be specified for all external and internal interface boundaries. Tolerances shall be specified in the design documents. Tolerances shall be accounted for in applicable design analysis (e.g., location of applied load).

HA-4244 Housing Attachments

The attachment design shall include all service limits and load combinations set forth in HA-4212 and HA-4213, or as required by the design specification.

Attachments shall be either the welded or bolted type.

HA-4245 Welded Attachments

Consideration shall be given to local stresses induced in the housing wall by integral attachments as defined in AA-4243.

Attachment and housing material shall be compatible for welding. See Article AA-6000.

The permissible types of welded joints shall be in accordance with AWS D1.1, AWS D9.1, AWS D1.3, or ASME Section IX, as applicable.

HA-4246 Bolted Attachments

Consideration shall be given to bolting and local stresses induced in the housing wall by nonintegral attachments as defined in AA-4243.

The design of bolts for structural supports shall meet the requirements of AISC Specification for the Design, Fabrication, and Erection of Structural Steel, Ninth Edition, Part 4.

HA-4247 Fatigue Considerations

Internal housing components subjected to FML should be designed for fatigue based on cyclic loading of the element. See HA-4211 to determine the portion of the affected internal housing components. The appropriate reductions in allowable stresses are given in Section 5, Appendix B of the AISC Specification for the Design, Fabrication, and Erection of Structural Steel for Buildings, Ninth Edition.

HA-4248 Fire Protection

Fire protection requirements shall be specified by the Owner or designee commensurate with individual component requirements.

Fire protection for Type III adsorbers shall be provided per FE-4620.

HA-4300 HOUSING JOINTS AND SEAMS

HA-4310 GENERAL

Selection of joints and seams used in the assembly of housing sections shall be based on the required structural integrity, leak-tightness, and the fluid flow within the system. Duct-housing interconnections shall be designed with consideration of the air distribution uniformity.

HA-4320 HOUSING JOINTS AND SEAMS

HA-4321 Acceptable Longitudinal Seams and Joints

The following longitudinal seams and joints are acceptable for use in housing sections subject to the limitations of HA-4330, HA-4340, and HA-4500:

(a) welded lap joint
(b) welded butt joint
(c) welded flange
(d) fillet corner welds

HA-4322 Acceptable Transverse Joints

The following types of transverse joints are acceptable for use in housing sections subject to the limitations of HA-4330, HA-4340, and HA-4500:

(a) welded lap joint
(b) welded butt joint
(c) welded flange
(d) companion angle: gasketed and bolted

Copyright ASME International
Provided by IHS under license with ASME
No reproduction or networking permitted without license from IHS
Not for Resale

HA-4323 Other Types of Connections

Other types of rigid longitudinal and transverse connections may be acceptable provided that the design structural characteristics are qualified. Qualification shall be documented by engineering evaluation or test as specified by the Owner or designee. Qualification test shall demonstrate the joint's ability to withstand load combinations in HA-4212. Joint design qualification shall be completed prior to the start of fabrication.

HA-4324 Bolts and Fasteners

Connections shall be designed to sustain all loading combinations. Bolted connection and joint design shall be designed to meet allowable leakage of HA-4500.

HA-4330 AIR CLEANING UNIT JOINTS AND SEAMS

HA-4331 Welds

The pressure boundary joints and seams for all air cleaning unit housings shall be continuously welded.

HA-4332 Seals

Penetrations on housings shall be sealed by welding, with a sealant qualified for the housing's environment, or with adjustable compression or gland-type seals. Gland-type seals include but are not limited to O-rings, gaskets, and other nonmetallic materials.

HA-4333 Electrical Conduits and Drains

All penetrations by electrical conduits and drains shall be arranged and individually sealed or valved so that bypassing of HEPA filter banks or adsorber banks cannot take place. Electrical conduit open to the inside shall be internally sealed to meet allowable leakage determined in HA-4500.

HA-4334 Separate Mounting Frames

Where separate mounting frames for HEPA filters and adsorbers are required, they shall be continuously seal welded to the housing.

HA-4340 Air Conditioning and Air Handling Units Housing, Joints and Seams

These unit joints and seams shall be of either welded or bolted construction or other types meeting the requirements of HA-4323 and the allowable leakage criteria specified in the design specification.

HA-4341 Penetrations

Penetrations on housings shall be sealed by welding, adjustable compression, gland-type seals, or other method capable of meeting allowable leakage criteria for the housing as determined in HA-4500.

HA-4400 ACCESSORIES

HA-4410 GASKETS

Gaskets shall be made of materials which are compatible with the conditions of HA-4600. Gasket dimensions shall be based on joint design. An acceptable criterion for compression of gasket material shall be established on the basis of the gasket chosen. This acceptance criterion and the service life of the gasket anoint shall be documented by evaluation or testing as determined by the Owner or designee.

HA-4420 ACCESS DOORS AND PANELS

Construction of doors/panels and door frames shall be selected to meet the allowable leakage determined in HA-4500. Sealing surfaces between the door/panel and frame shall be designed for compression sealing. The design shall incorporate means for adjusting compression forces, gasket compression, and alignment.

Spacing of hinges, latches, and bolts shall be determined by calculation or test to ensure a uniform compression of the gasket. Spacing shall enable a compression tight enough to assure leakage requirements are met (HA-4500) and provide a gasket compression uniformity of ±20 deg.

Hinged doors, if specified, shall be designed to minimize damage to compression seals due to friction and shear forces during opening and closing of the doors.

Doors shall be designed for ease of operation by one person. Man-entry housing doors shall be operable from both inside and outside the housing and be clearly labeled for open and closed latch position.

Hinges and latches shall be designed such that lubrication materials shall not enter the interior of the housing.

See Nonmandatory Appendix HA-B (HA-B-1110) for additional guidance on the design of access doors.

Copyright ASME International
Provided by IHS under license with ASME
No reproduction or networking permitted without license from IHS
Not for Resale

HA-4430 PROVISIONS FOR TESTING AND MAINTENANCE

HA-4431 Test Ports

The Owner or designee shall evaluate the design function of the equipment to determine where test ports (including injection and sampling ports) are required.

The penetration shall comply with HA-4332, and have a cap or plug that is suitable to meet the pressure requirements of the housing.

HA-4432 Manifolds

The Owner or designee shall determine where injection and sampling manifolds are required. Injection and sampling manifolds shall be constructed of metal to minimize damage potential and to maintain manifold qualification. Sampling and injection manifolds which are required to be installed within the filter housing should be designed for permanent installation within the housing. If permanently installed manifolds cannot be provided, then manifolds shall be designed to be removable, with each manifold piece numbered, tagged, and marked for reinstalling prior to each test. Permanent manifold installation is recommended to obtain better repeatability of test results. When an air cleaning unit contains two or more HEPA filter banks or adsorber banks in series, or both, injection and sampling manifolds for the respective test agents are required for each of the filter and/or adsorber banks. General guidance for manifolds is given in Nonmandatory Appendix HA-C.

Injection manifolds shall be qualified in accordance with HA-5700. Sampling manifolds shall be qualified in accordance with HA-5800.

HA-4433 Housing Access

Walk-in housings shall be protected and braced to prevent damage by personnel entering for inspection and maintenance. Walk-in access doors (20 in. wide by 50 in. high, minimum) (51 cm wide by 127 cm high) shall be provided on each side of each component section when housing size permits. A permanent platform shall be installed internal to the housing to provide access to filters for filter banks greater than or equal to 6 ft (approx. 1.8 m) in height. Platform shall not interfere with filter access or airflow distribution.

Space shall be provided both internal and external to the housing for equipment removal and maintenance. See Nonmandatory Appendix HA-B for additional guidance.

HA-4434 Lighting

Walk-in housings shall be fitted with vapor-tight lights between each bank of components. For walk-in air cleaning unit housings, fixtures shall be flush mounted and serviceable from outside of the housing. Lighting levels shall be determined based on personnel safety visual requirements as given in the design specification and guidance provided by IES Lighting Handbook as published by the Illuminating Engineering Society of North America.

HA-4440 MISCELLANEOUS

HA-4441 Drains

Consideration shall be given to drains depending on requirements, services, or components within each compartment. For example, drains shall be required for:

(a) fire protection systems

(b) removal of decontamination liquids

(c) moisture separators

(d) condensing cooling coils

Drains form an integral part of the housing pressure boundary and are subject to air leakage requirements established in HA-4500.

The size selected for each drain furnished in the housing as well as the collection point for each drain shall be documented by calculation or test as determined by the Owner or designee.

For additional guidance on the design of drains, see Nonmandatory Appendix HA-B (HA-B-1120).

HA-4442 Insulation

(a) Insulation shall be provided as specified by the Owner or designee to ensure air conditioning function, limit condensation, or provide acoustic noise reduction as required.

(b) Acoustic linings and thermal insulation shall not be applied to the inside of housings that may become contaminated.

(c) Insulation applied to the outside of housings shall not prevent access to doors, access panels, or other components requiring adjustment or maintenance.

(d) The fire hazard classification of applied insulation, adhesive, and sealer shall not exceed a flame spread of 25 and smoke developed of 50 in accordance with NFPA-90A.

Copyright ASME International
Provided by IHS under license with ASME
No reproduction or networking permitted without license from IHS
Not for Resale

HA-4443 Clamping Mechanism

Side-access housings shall have a clamping mechanism, filter retrieval features, and filter indexing mechanisms. The clamping mechanism shall be individually adjustable for each HEPA filter or adsorber.

For side-access housings with fluid seals, the filter clamping mechanism shall be capable of moving the filter on and off through adequate travel to ensure the knife edge is embedded into the pliable sealant and provides seal for the complete perimeter of each filter or adsorber.

The clamping mechanism shall provide for uniform gasket compression. The clamping mechanism for walk-in housings shall be designed per Section FG.

HA-4500 PRESSURE BOUNDARY LEAKAGE

HA-4510 GENERAL

Pressure boundary leakage shall be controlled to ensure satisfactory environmental conditions, either within or outside of the nuclear facility.

Allowable leakage for a housing, or portion of a housing, shall be determined considering the following factors:

(*a*) control of airborne contamination
(*b*) control of space pressure
(*c*) control of space temperature
(*d*) control of space humidity

HA-4520 APPLICABILITY

Housing pressure boundary leakage shall apply to air cleaning, air conditioning, and air handling systems. Each housing's pressure boundary shall include the following items:

(*a*) housing enclosure
(*b*) access panels and doors
(*c*) penetrations for instrumentation piping, electrical, and other utilities

HA-4530 EVALUATION

HA-4531 Responsibility

The Owner or designee shall establish the allowable leakage to assure ventilation, temperature, and contamination control functions are achieved.

HA-4532 Allowable Leakage Determination

The following criteria shall be utilized in the determination of allowable leakage:

(*a*) application of governing codes, regulations, and plant-specific requirements;

(*b*) consideration of each housing's operating mode, including anticipated system upset condition, such as rapid closure of dampers;

(*c*) normal and maximum operating pressures throughout the pressure boundary; and

(*d*) system internal and external environmental conditions.

Guidance for determination of allowable leakage is given in Section SA, Nonmandatory Appendix SA-B.

HA-4533 Exceptions to Leakage Requirements

Air cleaning, air conditioning, and air handling housings exhibiting one of the following conditions need not be subjected to quantitative measurement of leakage unless otherwise required by the design specification.

(*a*) Housings in systems serving only the protected space and located only within the same protected space.

(*b*) Housings under negative pressure which are located entirely in a clean interspace, and only provide air cooling or heating function.

However, the housing shall be pressurized to locate and seal all audible leaks. Reference Section SA, Nonmandatory Appendix SA-B, Figs. SA-B-1410-1 through SA-B-1410-3 for typical system configurations.

HA-4534 Documentation

Derivation of allowable leakage for each housing, or portion thereof, shall be documented by the Owner or designee. This documentation shall include the following:

(*a*) identification of housing or portion of housing
(*b*) governing codes, regulations, and plant-specific requirements
(*c*) purpose of leakage control; see HA-4510
(*d*) system mode of operation
(*e*) normal and maximum operating pressure
(*f*) method of derivation of allowable leakage
(*g*) test pressures and associated allowable leakage

HA-4600 DESIGN SPECIFICATION

The Owner design specification shall contain the following information which is relevant to the housing and housing supports covered by this section.

Copyright ASME International
Provided by IHS under license with ASME
No reproduction or networking permitted without license from IHS
Not for Resale

(a) Loads as defined by HA-4211.

(b) Environmental conditions.

(1) Housing external-design environmental conditions including, but not limited to pressure, temperature, relative humidity, radiation exposure, and hostile environmental factors for all plant conditions.

(2) Housing internal-design environmental conditions for all system operating conditions.

(c) Service conditions as defined by AA-4213.

(d) Design and service limits as defined by AA-4214.

(e) Allowable housing leakage as defined by HA-4500.

(f) System safety-related function: Identify the function of the housing for each plant condition. The function shall consist of purpose and operational parameters (i.e., flow, leakage, pressure, temperature). Plant conditions and service limits are defined by AA-4213 and AA-4214.

(g) Fire protection requirements.

(h) Material certification requirements.

(i) Tolerance requirements.

(j) Inlet and outlet configurations.

(k) Housing components.

(1) adsorbers

(2) fans

(3) filters

(4) moisture separators

(5) dampers

(6) heaters

(7) coils

(8) insulation

(9) access requirements (i.e., doors, access panels)

(10) instrumentation and controls

(11) spray-type conditioners

Copyright ASME International
Provided by IHS under license with ASME
No reproduction or networking permitted without license from IHS
Not for Resale

ARTICLE HA-5000
INSPECTION AND TESTING

HA-5100 GENERAL

HA-5110 SCOPE AND APPLICABILITY

This section contains general requirements for the inspection and testing of housings and housing supports.

HA-5120 RESPONSIBILITY FOR PROCEDURES

When an inspection or test is required herein, written inspection or testing procedures shall be developed, by the parties performing the test or inspection, to the specific requirements of this section. The inspection or testing shall be performed by personnel qualified in accordance with ASNT SNT-TC-1A as amended by ASME NQA-1 and AA-6433.

HA-5200 INSPECTION

HA-5210 GENERAL REQUIREMENTS

Visual inspections shall be performed in accordance with AA-5200 and TA-3510.

Inspection and testing of welds shall be performed in accordance with AA-5300 and Article AA-6000.

HA-5220 HOUSINGS

Housings shall be inspected for proper dimensions including tolerances, as specified by HA-6400 and governing construction documents.

HA-5221 Joints and Seams

Joints and seams shall be visually inspected. Acceptance criteria shall be as follows.

(a) Joints and seams shall comply with the requirements of HA-6400 and HA-6500.

(b) Gasketed joints shall provide uniform gasket compression. Gaskets shall be installed per construction documents.

(c) Longitudinal or transverse welded joints shall comply with Article AA-6000 requirements.

(d) Threaded fasteners shall be provided with locking devices in accordance with AA-6258.

HA-5222 Stiffeners

Stiffeners shall be visually inspected to ensure compliance with the following acceptance criteria.

(a) Stiffeners shall comply with the fabrication and installation requirements of Article HA-6000.

(b) Welds shall comply with Article AA-6000 requirements.

(c) Threaded fasteners shall be provided with locking devices in accordance with AA-6258.

(d) Removal of temporary attachments shall be verified.

HA-5230 HOUSING SUPPORTS

Supports shall be visually inspected during installation, after installation, or both in accordance with the following acceptance criteria.

(a) Supports shall comply with the fabrication and installation requirements of HA-6400.

(b) Welded joints shall comply with Article AA-6000 requirements.

(c) Threaded fasteners shall be provided with locking devices in accordance with AA-6258.

(d) Removal of temporary attachments shall be verified.

Copyright ASME International
Provided by IHS under license with ASME
No reproduction or networking permitted without license from IHS
Not for Resale

HA-5240 FILTER MOUNTING FRAME TO HOUSING WELD INSPECTION

The housing filter mounting frame for HEPA filter and adsorbers shall be inspected using visual and nondestructive test methods per AA-6330.

HA-5300 PRESSURE BOUNDARY LEAKAGE TESTING

HA-5310 GENERAL

Temporary isolation at a transverse joint shall be allowed subject to the following requirements.

(a) Transverse joints not subjected to a quantitative leak test shall be companion angle type or other types which enable visual inspection of the sealing mechanism between mating housing sections.

(b) Assembled joints utilizing gasketing shall be visually inspected to ensure uniformity of gasket compression.

(c) The reduced allowable leakage (L_r) of housing sections shall be as follows:

$$L_r = L_s - R$$
$$R = (C_j / C_T) L_s$$

where

R = reduction in allowable leakage in cfm/ft^2
C_j = total perimeter of all joints in tested section, including capped end joints
C_T = total perimeter of all joints in tested section, including capped end joints
L_s = section allowable leakage

HA-5320 ALLOWANCES FOR HOUSING LEAKAGE RATES BY SECTIONS

Temporary isolation at a transverse joint shall be allowed subject to the following requirements.

HA-5330 TESTING PROCEDURES

Prior to pressure boundary leakage testing, test procedures shall be developed in accordance with TA-3430. All test equipment shall be specified with the proper range and required accuracy. Test procedures shall include acceptance criteria determined by HA-4500, HA-5320, and HA-5350.

HA-5340 DOCUMENTATION

A test report shall be prepared to document the pressure boundary leakage test. This report shall include the following information:

(a) housing or portion of housing tested
(b) specified allowable leakage and test pressure
(c) calculations for housing section square footage for housings tested by sections
(d) adjustments to allowable leakage per HA-5320(c)
(e) measured leakage test
(f) list of pressure boundary components which were not installed during the pressure boundary leakage test
(g) test equipment used; including model number, serial number, and evidence of calibration
(h) names of test personnel
(i) date of test

HA-5350 ACCEPTANCE CRITERIA

HA-5351 Quantitative Leakage Tests

Acceptance criteria for quantitative leakage tests shall comply with HA-4500 and HA-5320(c).

HA-5352 Nonquantitative Leakage Tests

For nonquantitative leakage tests allowed by HA-4533, the acceptance criteria shall be that audible leaks have been sealed.

HA-5400 MOUNTING FRAME TO HOUSING LEAKAGE TEST

A mounting-frame pressure leak test may be used to detect leaks in the HEPA filter and adsorber mounting frames that could affect the results of the in-place leak tests in TA-4300. The test, if used, shall be conducted in accordance with Nonmandatory Appendix TA-A.

HA-5500 STRUCTURAL CAPABILITY TESTS

HA-5510 HOUSING PRESSURE TEST

A pressure test shall be performed at the structural capability pressure per TA-3522. This test shall be maintained for the duration of the inspection. Upon completion of this pressure test, housings exhibiting permanent distortion or breach of integrity shall be repaired or replaced. The pressure test shall be repeated

Copyright ASME International
Provided by IHS under license with ASME
No reproduction or networking permitted without license from IHS
Not for Resale

after repair or replacement until no permanent distortion or breach of integrity is observed.

HA-5600 AIRFLOW DISTRIBUTION TESTS

When required by the Owner, airflow distribution qualification tests for housings containing more than one HEPA filter or adsorber bank shall be made in the shop in accordance with Section TA-4600. This requirement shall be specified in the Owner's specification. Acceptance criteria shall be in accordance with TA-4600. Housings containing HEPA filter(s), adsorbers, or both shall be field tested to demonstrate adequate airflow distribution in accordance with TA-4600. Tests shall be performed with components in the housing and the housing complete (i.e., assembled). Minor items such as temperature elements, pressure taps, etc., do not need to be installed as these components do not significantly influence airflow distribution.

The Owner or designee shall specify a shop test in the design specification when housing inlet or outlet conditions could result in nonuniform flow distribution.

HA-5700 AIR-AEROSOL MIXING UNIFORMITY TESTS

When required by the Owner or designee, air-aerosol qualification tests for housings containing more than one HEPA/adsorber shall be made in the shop in accordance with TA-4600 for each manifold design. This requirement shall be specified in the Owner's specification. Acceptance criteria shall be in accordance with TA-4600. Tests shall be performed with components in the housing and the housing complete (i.e., assembled). Minor items such as temperature elements, pressure taps, etc., do not need to be installed as these components do not significantly influence mixing. This design qualification test may be performed once and submitted to the Owner or designee for approval. The design of the manifold and its location in the housing must be the same as qualified or a new aerosol mixing test is required.

HA-5800 SAMPLING MANIFOLD TESTING

Sampling manifolds shall be qualified to demonstrate that they collect a representable sample equivalent to a single-point sample taken at a point at least ten duct diameters downstream of the filters. Refer to Nonmandatory Appendix D for performance test guidance. To ensure required leakage detection, acceptance criteria for sampling manifolds shall be equal to or greater than the concentration detected with the single-point sample.

HA-5900 AIR CONDITIONING AND AIR HANDLING UNIT TESTING

When required by the Owner or designee, integrated component functional acceptance testing shall be performed in the shop per Article TA-4000. This requirement shall be included in the Owner's specification.

Copyright ASME International
Provided by IHS under license with ASME
No reproduction or networking permitted without license from IHS
Not for Resale

ARTICLE HA-6000
FABRICATION

HA-6100 GENERAL

Air cleaning, air conditioning, and air handling unit housings and supports shall be fabricated in accordance with this section and Article AA-6000.

HA-6110 SCOPE AND APPLICABILITY

This article contains specific requirements for the fabrication of air cleaning, air conditioning, and air handling unit housings and their supports.

HA-6120 MATERIALS

HA-6121 Material Selection

Materials used in fabrication performed under this section shall conform to Article HA-3000 requirements.

HA-6122 Material Identification

Materials to be utilized in the fabrication and installation of components, parts, and appurtenances shall be identified on fabrication drawings and in the specification, as required in Article AA-6000.

HA-6123 Repair of Material With Defects

Material with defects that are discovered or produced during the fabrication process may be used, provided the defects are repaired in accordance with the requirements of Article AA-8000, and for weld repairs, in accordance with AA-6300.

HA-6130 CONTROL OF INSTALLATION AND FABRICATION PROCESS

Quality control procedures shall be prepared and maintained current for all fabrication processes in accordance with Article AA-8000 requirements.

HA-6140 WELDING

The welding of filter housings and supports shall comply with the requirements of AWS D1.1, AWS D1.3, AWS D9.1, or ASME Boiler and Pressure Vessel Code, Section IX.

Welding and brazing performed in accordance with this section shall meet the requirements of AA-6300 and AA-6400.

HA-6200 FABRICATION PROCESS

HA-6210 CUTTING, FORMING, BENDING, ALIGNING, AND FITTING

HA-6211 Uncoated Metal

Uncoated metal may be cut, formed, or bent by any means that does not degrade the mechanical or chemical properties of the material.

HA-6212 Coated Metal

Coated metal may be cut, formed, or bent as described in HA-6211. Coating damaged by scratches, gouge marks, or the removal of coating shall be repaired in accordance with AA-6540.

HA-6213 Inside Bend Radii

Inside bend radii shall not be less than the values of the material grade given in the AISC Manual of Steel Construction, Allowable Stress Design.

HA-6214 Joining Parts

Parts that are to be joined may be fitted, aligned, and retained in position during the joining operation by the use of bars, jacks, clamps, drift pins, tack welds, or other temporary attachment. The fitting and aligning process shall not damage the joined parts, or their

Copyright ASME International
Provided by IHS under license with ASME
No reproduction or networking permitted without license from IHS
Not for Resale

surfaces, or enlarge bolted holes greater than the values shown in AISI, Specification for Design, Fabrication, Erection of Structural Steel for Buildings, Table 1.23.4.

HA-6215 Temporary Attachments

Temporary welded attachments may be used in the fabrication process but shall be completely removed after use. Where such temporary attachments are used, they shall be subject to the following requirements.

(a) Material shall be suitable for welding with no reduction in the structural integrity of the member to which the attachment is secured.

(b) Attachment material shall be identified as required by Article HA-3000.

(c) The welder and welding procedures shall be qualified in accordance with HA-6140.

HA-6300 MECHANICAL FASTENING

HA-6310 GENERAL

HA-6311 Nuts

Nuts for all bolts and studs shall be engaged for the full length of the nut thread. Margin shall be allotted to prevent the nut from engaging the unthreaded portion of the bolt or stud.

HA-6312 High-Strength Bolts

High-strength bolts, used in making bolted structural joints, shall be installed in accordance with the requirements of the *Specification for Structural Joints Using A325 or A490 Bolts* AISC Code.

HA-6313 Pins

Pins for securing insulation should be secured to the metal surface by welding. Other attachment methods are acceptable, if allowed by the design specification. Justification of the attachment method used shall be supported by evaluation or calculation as determined by the Owner or designee, considering the requirements of the design specification.

HA-6314 Connecting

Connecting flange faces shall be free of joint crevices at corners. These defects shall be eliminated by welding or grinding.

HA-6400 FABRICATION TOLERANCES

HA-6410 GENERAL

Housing fabrication shall be accomplished within the tolerances detailed in the manufacturer's design drawings. These fabrication tolerances provide a method of quality control. For separately installed frames in walk-in housings, see Section FG.

HA-6420 SIDE-ACCESS HOUSING AND GASKET SEAL SURFACES

HA-6421 Flatness

Each HEPA filter/adsorber housing seating surface shall be plane within $^{1}/_{16}$ in. (1.6 mm).

HA-6422 Surface Finish

Pits, roll scratches, weld spatter, and other surface defects within the sealing areas shall be ground smooth. After welding, ground areas shall merge smoothly with the surrounding base metal.

HA-6430 SIDE-ACCESS HOUSING FILTER FLUID SEAL SURFACES

HA-6431 Flatness

The tolerance on each knife edge shall be plane within $^{1}/_{8}$ in. (3.2 mm).

HA-6500 CLEANING

All surfaces shall be cleaned per AA-6500 prior to acceptance. No halogen-bearing materials or carbon steel tools shall be used to clean housings or components constructed of stainless steel. Cleaning shall be performed in accordance with the manufacturer's written procedures.

Copyright ASME International
Provided by IHS under license with ASME
No reproduction or networking permitted without license from IHS
Not for Resale

ARTICLE HA-7000
PACKAGING, SHIPPING, RECEIVING, STORAGE, AND HANDLING

HA-7100 GENERAL

Packaging, shipping, receiving, storage, and handling requirements shall be in accordance with Article AA-7000 and this section.

HA-7200 PACKAGING

HA-7210 GENERAL

Air cleaning, air conditioning, and air handling unit housing packaging requirements are dependent upon the protection level as described in AA-7230. Additional clarification or exceptions are provided below.

HA-7211 Protection

Air cleaning, air conditioning, and air handling unit housings shall be protected to prevent physical damage. All openings shall be covered with wood, metal, or plastic. Waterproofing is required to exclude moisture from interior spaces and external devices. Mating surfaces shall be identified and specifically protected from damage. Protection equal to Level D is required for the basic unit. Protection for housing components must be equal to that required by the level of protection specified in the applicable Code section.

HA-7300 SHIPPING

This subarticle relates to transportation methods from the manufacturer or supplier to the job site. Shipping shall comply with the provisions of AA-7100, AA-7200, and AA-7300.

HA-7400 RECEIVING

Receiving at the job site or intermediate location, where additional work is to be performed or for long-term storage, shall be accomplished in accordance with the provisions of Article AA-7000. It shall be the requirement, at any receiving point, to have adequate descriptions of items to permit suitable inspection for conformance, damage acknowledgment, and proper documentation.

HA-7500 STORAGE

HA-7510 GENERAL

Housing storage requirements are dependent upon the protection level described by AA-7230. Protection equal to Level D is required for the basic unit. Protection for housing components must be equal to that required by the level of protection specified in the applicable Code section. These levels shall be the required storage requirements along with the requirements of HA-7511 and HA-7512.

HA-7511 Drains and Vents

All housing drains or vents shall be sealed or closed as specified by the Owner or designee. Provisions may be made to use certain drains or vents for assurance that water or other objectionable material does not accumulate within the housing.

HA-7512 Other Components

Components covered by other sections of this Code that are installed into an integral assembly which is covered by this section shall be stored in accordance with AA-7230.

Copyright ASME International
Provided by IHS under license with ASME
No reproduction or networking permitted without license from IHS
Not for Resale

ARTICLE HA-8000
QUALITY ASSURANCE

HA-8100 GENERAL

Equipment and material covered under this section shall be manufactured, fabricated, installed, inspected, and tested in accordance with the provisions of a Quality Assurance Program meeting Article AA-8000 requirements.

HA-8200 MATERIAL IDENTIFICATION

Measures shall be established for controlling and identifying material throughout the manufacturing process and during shipment in accordance with Article AA-8000.

HA-8300 DRAWINGS AND DOCUMENTATION

The design specification shall list the documentation requirements for the housing and list when this documentation is to be provided by the manufacturer, supplied to the Owner or designee. Housing-related items shall include, but not be limited to the following:

(a) material certification and test reports

(b) housing drawings including:

(1) outline drawings

(2) piping and instrumentation diagrams

(3) wiring diagrams

(c) material list

(d) welding procedures and procedure qualification records as required by applicable welding code listed in HA-6140

(e) reports for tests and inspections required by Article HA-5000

(f) seismic and environmental qualification reports

(g) operating, installation, and maintenance manuals

Copyright ASME International
Provided by IHS under license with ASME
No reproduction or networking permitted without license from IHS
Not for Resale

ARTICLE HA-9000
NAMEPLATES AND STAMPING

HA-9100 GENERAL

All items manufactured under the requirements of this section shall be identified to assure compliance with Article AA-9000 requirements.

Records, as necessary to assure compliance with AA-8200, shall be maintained by the responsible organization in accordance with the approved quality assurance program.

HA-9110 STAMPING/MARKING

Stamping/marking, as used herein, provides a means of maintaining identification of finished products for the purpose of retaining traceability of material.

HA-9111 Housings

Housings shall be provided with nameplates, in accordance with AA-9120, which relate the housings to the applicable design and fabrication documents. Housings fabricated in multiple sections need only one nameplate. Each section shall have identification markings, observable after completed installation, which relate all sections. Nameplates shall be visible after completed installation.

HA-9112 Housing Accessories

Housing accessories shall be marked, stamped, or provided with a nameplate which shall relate to the design and fabrication drawings. Identification shall be observable after completed installation.

Copyright ASME International
Provided by IHS under license with ASME
No reproduction or networking permitted without license from IHS
Not for Resale

NONMANDATORY APPENDIX HA-A
DIVISION OF RESPONSIBILITY

This Nonmandatory Appendix is intended to identify the roles normally assumed by the organizations responsible for fulfilling Code requirements when not specifically addressed in an article or subarticle. These are guidelines to assist with Code compliance and are not to be construed as legal or contractual responsibilities unless so invoked by the Owner or designee.

TABLE HA-A-1000
DIVISION OF RESPONSIBILITY

HA-	Item	Responsible Party
3100	Allowable materials	Owner or designee
3200	Special limitations on materials	Owner or designee
3300	Certification of material	Manufacturer/Supplier
4200	Design criteria	Owner or designee
4300	Housing joints and seams	Manufacturer/Owner or designee
4400	Accessories	Manufacturer/Owner or designee
4500	Pressure boundary leakage	Owner or designee
4600	Design specification	Owner or designee
5120	Responsibility for procedures	Manufacturer/Contractor/Owner or designee
5200	Inspection	Contractor/Manufacturer/Owner
5320	Allowances for housing leakage rates by sections	Owner or designee/Contractor
5330	Testing procedures	Owner or designee/Manufacturer/Contractor
5340	Documentation	Contractor
5350	Acceptance criteria	Contractor/Owner or designee
5500	Structural capability tests	Manufacturer/Contractor
5600	Airflow distribution tests	Manufacturer
5700	Air-Aerosol mixing uniformity tests	Manufacturer
6000	Fabrication	Manufacturer
7000	Packaging, shipping, receiving, storage, and handling	Manufacturer/Supplier Contractor/Owner or designee
8000	Quality assurance	All Parties
9000	Nameplates and stamping	Manufacturer/Supplier

Copyright ASME International
Provided by IHS under license with ASME
No reproduction or networking permitted without license from IHS
Not for Resale

NONMANDATORY APPENDIX HA-B
ADDITIONAL GUIDELINES FOR HOUSING DESIGN AND CONSTRUCTION

ARTICLE HA-B-1000
FUNCTIONAL DESIGN

Procedures and data for sizing of housings to provide the desired air quantities and distribution are presented in the ASHRAE Handbook, *Fundamentals* and in the SMACNA manual, *HVAC Duct System Design.* Principles of room-air distribution and duct system layout are also described in those publications. Exhaust system concepts are described in *Industrial Ventilation,* published by the American Conference of Governmental Industrial Hygienists.

Guidance for design, construction, and testing of housings is provided by the "Nuclear Air Cleaning Handbook — Design, Construction, and Testing of High Efficiency Air Cleaning Systems for Nuclear Application," C. Burchsted, Kahn, and Fuller, ERDA 76-21, and additional guidance provided herein.

HA-B-1100 GENERAL

HA-B-1110 ACCESS DOORS

HA-B-1111 General

(a) Seals. Gaskets should be installed on doors and a "knife-edge" sealing surface for the gasket should be provided. Gaskets should be neoprene or silicone rubber with a recommended 30-40 "Shore A Durometer" (Reference ASTM D2240, *Test Method for Rubber Properties — Durometer Hardness*). Access door design should enable a compression of at least 50% of nominal gasket thickness and provide a gasket compression uniformity of ±20%.

The gasket should be installed in as few pieces as possible to minimize the number of joints. Gasket joints should be designed to prevent leakage due to misfitting butt joints.

The gasket for walk-in type housings should be protected from possible damage when the door is opened by installing the gasket within a channel or with a metal bar between the door edge and the gasket to protect it in an equivalent manner.

Side access, bag-out access doors often use gaskets which accommodate the door to the housing seal. The gasket ensures the ability to seal the door within the allowable leakage criteria.

(b) Hinges and Latches. Latches should seal in less than 270 deg of motion. Latches should not have more than one handle per location.

Latches should be configured so that, when open, gravity will hold them in the open position.

Latch assemblies should have a minimum number of components and be designed so loose components cannot fall off.

Side access, bag-out access doors should have hinges, latches, or bolts of sufficient quantity and strength to compress the gasket and maintain the proper seal so that the housing leakage criteria is met.

(c) Additional Guidance. Sufficient clearance should be provided to enable doors to be opened allowing access for testing, component replacement, repair, or inspection.

Drawings for each type and size door should be submitted to the Owner for review prior to fabrication.

Copyright ASME International
Provided by IHS under license with ASME
No reproduction or networking permitted without license from IHS
Not for Resale

Door drawings should show location and details of hinges, latching lugs, and gaskets.

HA-B-1120 DRAINS

The number of normally open drains should be kept to a minimum as specified by the Owner or designee (i.e., drains should be manually valved off when not needed during operation) to reduce the possibilities of degrading the pressure boundary or bypassing the air-cleaning unit or filter banks.

Drain lines shall be valved, sealed, trapped, or otherwise protected to prevent an adverse condition where:

(a) air bypass can occur around filtration components;

(b) cooling/heating coil capacity is negatively impacted; or

(c) contaminated (radioactive or otherwise) air is transferred through the piping to a protected environment (either into or out of housing).

Traps or loop seals, when used, should be designed for the maximum operating (static) pressure the housing may experience during system start-up, normal operation, system transients, or system shutdown. Provision should be made for manual or automatic fill systems to ensure water loop seals do not evaporate. If manual filling is utilized, a periodic inspection or filling procedure should be implemented. A sight glass should be considered to aid in inspection. The same applies if a local sump is included in the design.

The drain system should be designed so that liquids do not backup into the housing. Hydraulic calculations should be prepared by the Manufacturer to document this feature of drain system design. Provision should be made in plant radwaste systems to treat maximum coincident flow rate.

Initial testing of the drain system should be performed by the Owner on site, after installation, to demonstrate operability.

When shutoff valves or check valves are utilized, they should be initially tested on site, after installation, and periodically thereafter for operability and leakage.

Valve leakage should be considered as part of the allowable housing leakage criteria derived in HA-4500.

Copyright ASME International
Provided by IHS under license with ASME
No reproduction or networking permitted without license from IHS
Not for Resale

NONMANDATORY APPENDIX HA-C
MANIFOLD DESIGN GUIDELINES

ARTICLE HA-C-1000
GENERAL

Test manifolds discussed in this appendix are those required for test agent injection, or sampling, to perform in-place aerosol tests per TA-4600 and TA-4700.

HA-C-1100 MANIFOLD REQUIREMENTS FOR IN-PLACE TESTS

HA-C-1110 AIRFLOW

Airflow capacity and distribution may require access ports for traverse measurements of airflow velocity on housings too small for a person to enter and take the necessary data. Specifically, there must be provision to measure the airflow capacity, which is best measured in a straight run by standard pitot tube traverse. If there is no straight run, then the measurements should be taken downstream of a HEPA filter bank. This is the same location at which the airflow distribution test data are usually taken.

The ports shall provide sufficient access to allow at least ten measurements to be taken evenly over the face of the HEPA filter bank. Walk-in housings with more than ten filters will be large enough to allow entry, unless unusual contamination restricts entry.

HA-C-1120 CHALLENGE/AIR MIXING UNIFORMITY

Manifold requirements for challenge/air mixing uniformity testing is similar to the access requirements for airflow distribution. The difference is that the measurements must be taken upstream of the HEPA filter bank or adsorbent bank. Large housings usually allow entry for personnel to locate sample lines by hand. Only small or highly contaminated systems need to be tested with a remote traverse.

HA-C-1130 MULTIPLE-COMPONENT BANKS IN SERIES

The most common problem area is leak testing multiple-component banks in series. There are many possible configurations that create this situation. A HEPA-Adsorber-HEPA bank is the most common case; however, HEPA-HEPA, Adsorber-Adsorber, HEPA-Adsorber, or Adsorber-HEPA banks alone, or in combination, also may require the use of manifolds. Refer to Figs. HA-C-1130-1 through HA-C-1130-5.

HA-C-1140 ABSENCE OF COMPONENTS IN SERIES

Even in a housing without components in series, manifolds may be necessary. An example is a recirculation system with no inlet duct before the filter bank. An injection manifold is required to obtain uniform test agent distribution.

HA-C-1150 UNIFORMITY

Manifolds are required whenever injection of a test agent at a single point does not result in the required distribution of the agent over the inlet face of the filter bank to permit the performance of the leak test or where sampling is required from an unmixed stream.

Copyright ASME International
Provided by IHS under license with ASME
No reproduction or networking permitted without license from IHS
Not for Resale

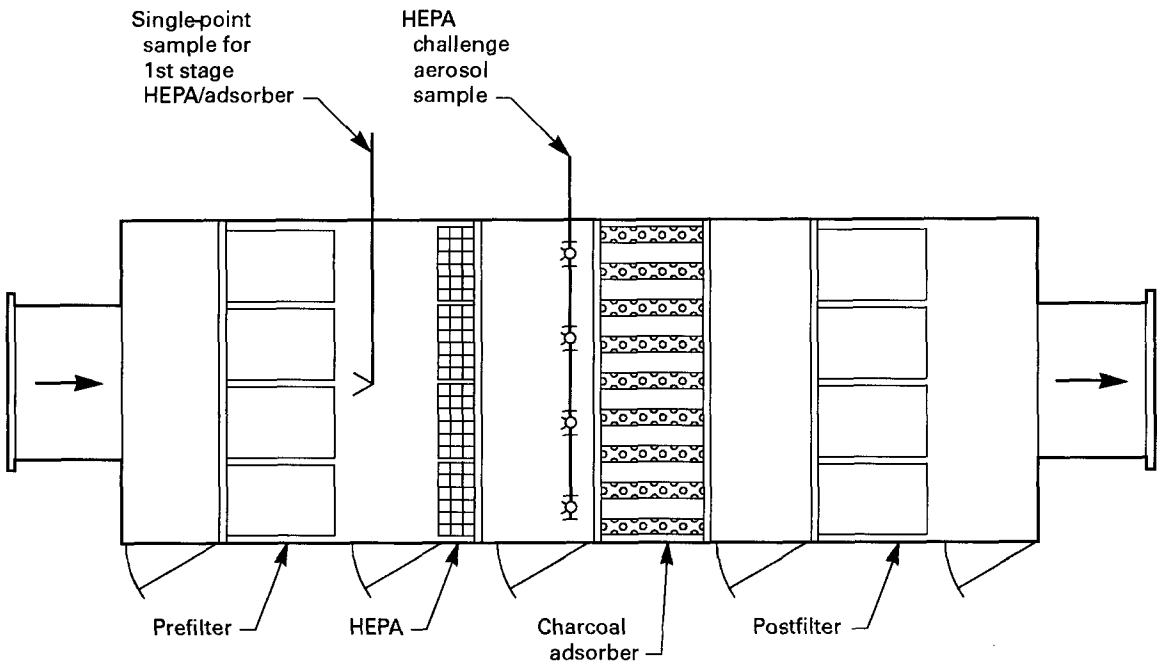

GENERAL NOTES:
(a) Injection of challenge aerosol/gas is in inlet duct.
(b) Downstream challenge aerosol/gas sample port may be located in outlet duct.

Plan A: ducted inlet/outlet HEPA/adsorber configuration

FIG. HA-C-1130-1 COMMON CONFIGURATIONS REQUIRING TEST MANIFOLDS (PLAN A)

Copyright ASME International
Provided by IHS under license with ASME
No reproduction or networking permitted without license from IHS
Not for Resale

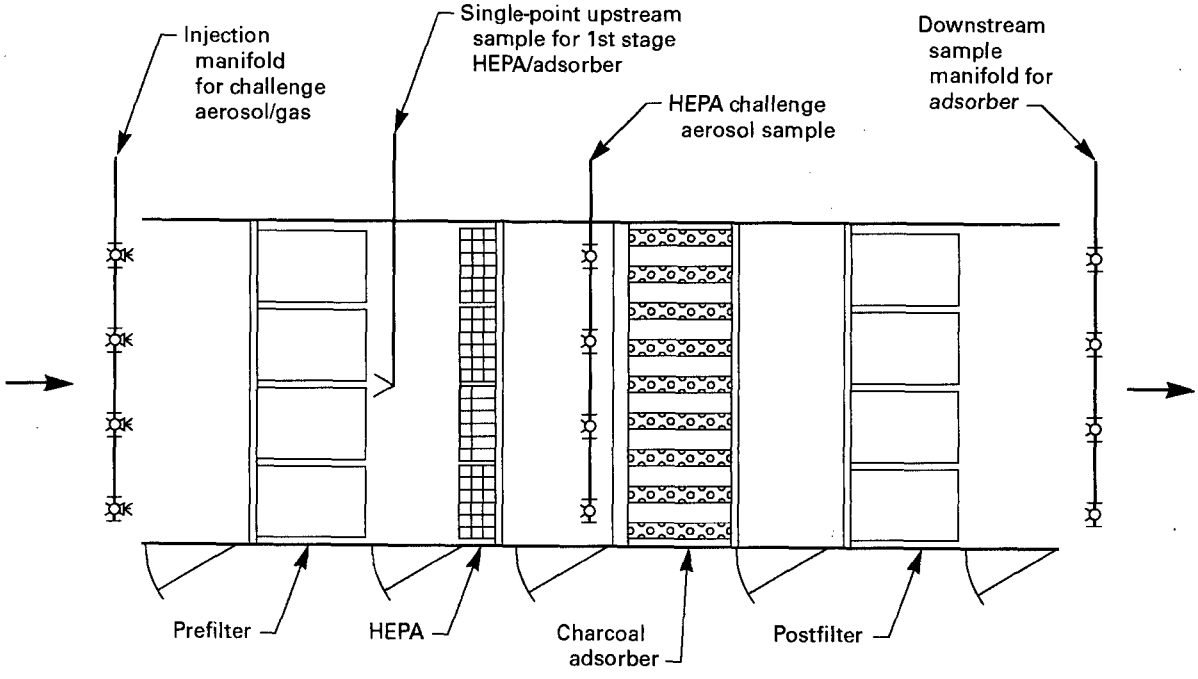

GENERAL NOTES:
(a) If an inlet duct is provided, the challenge aerosol/gas injection can be located in the inlet duct.
(b) If an outlet duct is provided, the downstream sample can be located in the outlet duct.

Plan B: unducted inlet/outlet HEPA/adsorber configuration

FIG. HA-C-1130-2 COMMON CONFIGURATIONS REQUIRING TEST MANIFOLDS (PLAN B)

Copyright ASME International
Provided by IHS under license with ASME
No reproduction or networking permitted without license from IHS
Not for Resale

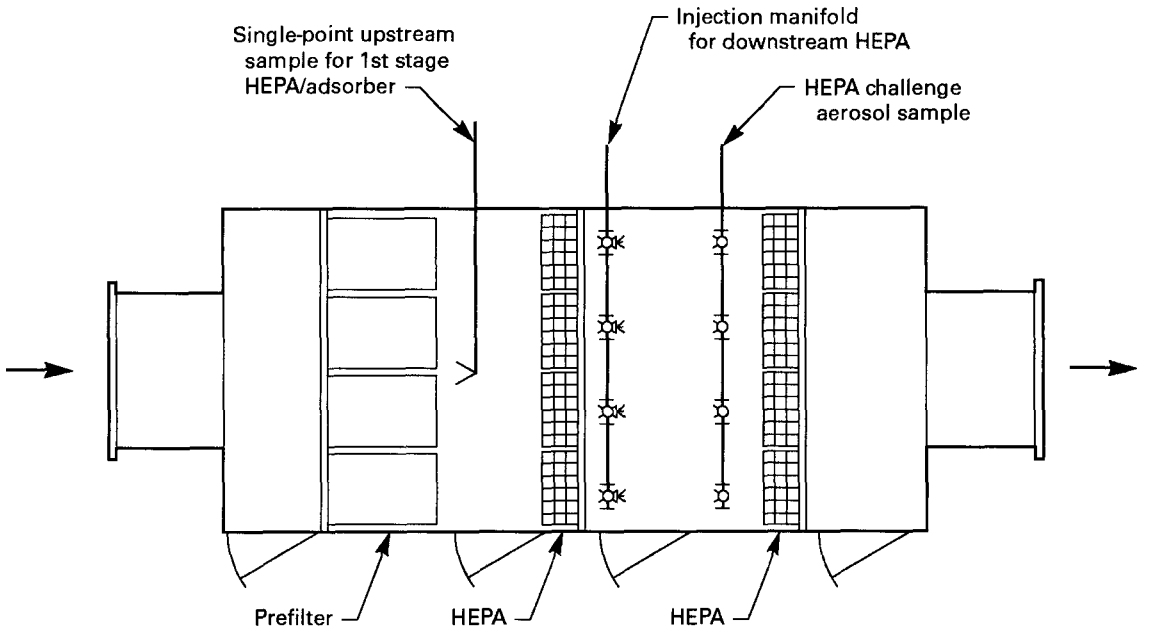

GENERAL NOTES:
(a) Injection of challenge aerosol/gas is in inlet duct.
(b) Downstream challenge aerosol/gas sample point may be in outlet duct.

Plan C: ducted inlet/outlet HEPA/HEPA configuration

FIG. HA-C-1130-3 COMMON CONFIGURATIONS REQUIRING TEST MANIFOLDS (PLAN C)

Copyright ASME International
Provided by IHS under license with ASME
No reproduction or networking permitted without license from IHS
Not for Resale

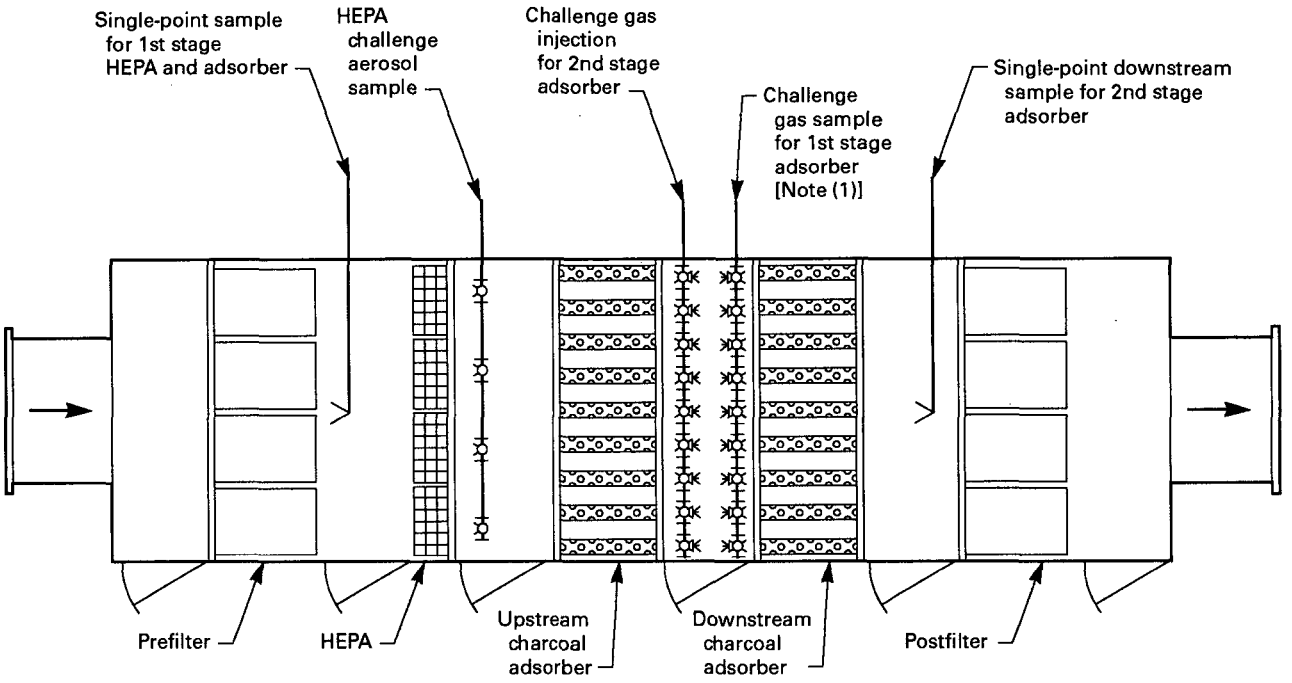

GENERAL NOTES:
(a) Injection of challenge aerosol/gas is in inlet duct.
(b) Downstream challenge aerosol/gas sample point may be in outlet duct.

NOTE:
(1) 1st stage challenge gas sample point can be used for 2nd stage upstream sample in lieu of single-point sample.

Plan D: ducted inlet/outlet
HEPA/adsorber/adsorber configuration

FIG. HA-C-1130-4 COMMON CONFIGURATIONS REQUIRING TEST MANIFOLDS (PLAN D)

Copyright ASME International
Provided by IHS under license with ASME
No reproduction or networking permitted without license from IHS
Not for Resale

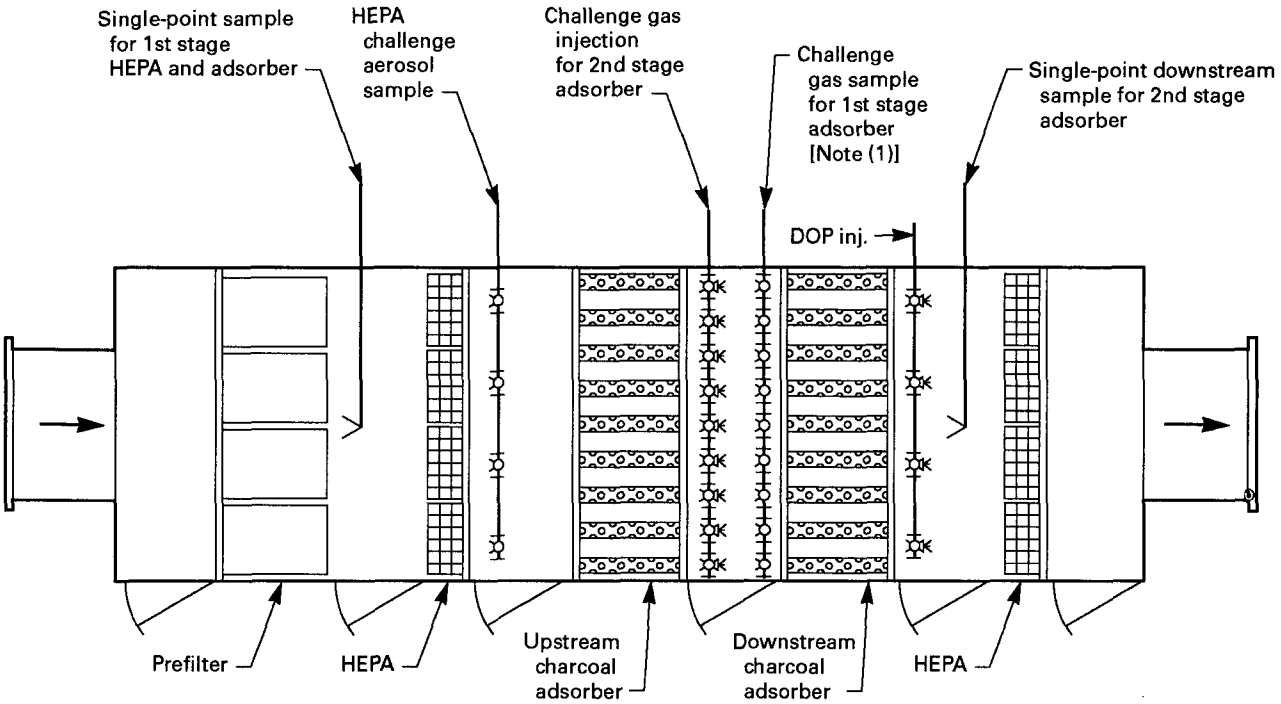

GENERAL NOTES:
(a) Injection of challenge aerosol/gas is in inlet duct.
(b) Downstream challenge aerosol/gas sample point may be in outlet duct.

NOTE:
(1) 1st stage challenge gas sample point can be used for 2nd stage upstream sample in lieu of single-point sample.

Plan E: ducted inlet/outlet
HEPA/adsorber/adsorber HEPA configuration

FIG. HA-C-1130-5 COMMON CONFIGURATIONS REQUIRING TEST MANIFOLDS (PLAN E)

Copyright ASME International
Provided by IHS under license with ASME
No reproduction or networking permitted without license from IHS
Not for Resale

An injection manifold is required to obtain uniform test agent distribution.

HA-C-1200 CONSIDERATIONS FOR USE OF PERMANENTLY INSTALLED MANIFOLDS

HA-C-1210

Permanently installed manifolds, which have passed Appendix D acceptance testing, provide a quick and simple means to repeat leak tests.

HA-C-1220

Alternate methods of testing when a single-point sample cannot be used, including temporary manifolds, are more time consuming than using a permanently installed manifold system.

HA-C-1230

Other methods require entering the air cleaning unit to install a temporary manifold, take multiple samples, place a shroud, remove a component, etc. This not only takes time, but can be a personnel exposure and contamination control problem with a contaminated system.

HA-C-1240

A permanently installed manifold system allows a bank test of the air cleaning unit without turning the air cleaning unit off or breaching the pressure boundary that could affect system operation.

HA-C-1250

For permanently installed manifolds, consideration should be given to installation and removal of filters. If the manifolds interfere with installation and removal, then they should be designed for removal to allow access to the filters.

HA-C-1300 INJECTION MANIFOLDS

HA-C-1310 GENERAL

An injection manifold is a device to allow uniform distribution of the injected challenge agent into a housing to permit proper leak testing of a filter or adsorber bank. The challenge agent shall be uniform across the face of the bank, including frame-to-housing interface, within ±20% of the average, to be confirmed by the Air-Aerosol Mixing Uniformity Test per TA-4600.

HA-C-1320

The complexity in design and installation of an injection manifold varies greatly depending on the unit/housing configuration. An injection manifold downstream of a Type III adsorber (reference Section FE) is relatively simple given that the small manifold will follow the slots and take advantage of the high velocity flow from them. Refer to Figs. HA-C-1130-2 and HA-C-1130-3.

The HEPA-HEPA configuration requires a wider distribution of injection and sampling because of the low velocity and laminar flow.

The distance between the component banks should be considered when designing the manifold.

HA-C-1330

Aerosol injection manifolds require a much larger diameter and additional design consideration than for challenge agent manifolds used for adsorber testing. Challenge agent is a gas at normal ambient conditions, so condensation and plate out is usually not a problem. All aerosol is subject to plate out, condensation, and agglomeration; therefore, all of the following recommendations are critical.

HA-C-1340 GENERAL RULES APPLICABLE TO ALL INJECTION MANIFOLDS

HA-C-1341

The total area of the exit holes are typically $1\frac{1}{4}$ times the cross section of the pipe in which the holes are located.

HA-C-1342

Headers should have a cross section $1\frac{1}{4}$ times the sum of the cross sections of all branches. [Four branches, each 1 in. (25.4 mm)(0.8 in.^{2})(516 mm^2) results in a header of (1.25)(4)(0.8 in.^{2}) = 3.9 in.^{2} or $2\frac{1}{4}$ in. diameter header. [(1.25)(4)(516 mm^2) = 2580 mm^2 or 57.3 mm.]

Copyright ASME International
Provided by IHS under license with ASME
No reproduction or networking permitted without license from IHS
Not for Resale

HA-C-1343

Paragraphs HA-C-1341 and HA-C-1342 are subject to allowances for standard drill and pipe dimensions. When compromise must be made, it is better to be on the high side of hole and branch area.

HA-C-1344

Valves should be used only to isolate branches. If possible, it is better to avoid them because the valve settings could change and require reverification of the manifold design.

HA-C-1345

The low point of each branch should have a screw cap to allow the leg to be drained if necessary.

HA-C-1346

A sharp radius change of direction should be avoided. Compound bends are preferable to multiple elbows. When elbows are used, they should be kept to the minimum; however, two 45 deg elbows in series are better than one 90 deg elbow.

HA-C-1347

The inside diameter of the manifold shall be smooth and free from sharp edges, burrs, crevices, and other configurations that would tend to trap aerosol.

HA-C-1348

The existing high velocity areas, or turbulence, within the air cleaning unit should be used to enhance mixing, and therefore, simplify the manifold design.

HA-C-1349

The inlet to the injection manifold should be at a location accessible for connecting the generator.

HA-C-1350

The location of permanent manifolds should be checked for possible interference with component change out and other maintenance access requirements.

HA-C-1360

Manifold outlet holes should be oriented to take advantage of the flow path to assist the mixing. Configurations that would subject the manifold holes to direct velocity pressure from the airflow should be avoided in all but the most exceptional circumstances. Holes should be on a staggered pattern, 90 deg to each other, 45 deg on the centerline. Reference Fig. HA-C-1130-3.

HA-C-1370

The design of an aerosol injection manifold is dependent on the bank and housing configuration.

HA-C-1380

Unique injection manifold designs shall be qualified by testing to ensure meeting the Air-Aerosol Mixing Uniformity Test of TA-4600.

HA-C-1390

If adjustments are required in a manifold to pass the uniformity test, they should be permanent. This will eliminate the need to repeat the uniformity test each time a leak test is performed. Examples of permanent adjustments are:

(a) drilling out a hole to a larger diameter

(b) closing (full or partial) a hole with solder or weldment

(c) addition of holes

(d) addition of orifice plates

(e) addition of permanent baffles to manifold

(f) basic change of design

HA-C-1400

All design points mentioned for injecting manifolds apply to sample manifolds. The main difference is the low concentration of challenge, on the order of 1,000 to 100,000 times less. This greatly reduces the problem of aerosol agglomeration and plate out. Further, the challenge is usually in the thermal equilibrium with the airstream and manifold, so condensation should not be a problem.

Copyright ASME International
Provided by IHS under license with ASME
No reproduction or networking permitted without license from IHS
Not for Resale

HA-C-1410

A major point to stress is that for the aerosol size used for in-place testing, isokinetic flow is **NOT REQUIRED.** For particle size less than 5 microns, isokinetic sampling is not required. For a gas, such as halide, isokinetic sampling is not required.

HA-C-1420

Given the low concentrations, the tube diameter of the sampling manifolds can be of much smaller diameter than for injection manifolds, but a larger number of branches is required to ensure detecting a leak point. The diameters are based largely on airflow considerations. These are a compromise of small ID for higher velocity (less delay) and pressure drop.

HA-C-1430

For adsorbers, even with the smaller diameter for sampling manifolds, the volume is usually significant as far as sample delay. The sample pumps in most detectors are sized for standard $\frac{1}{4}$ in. (6.35 mm) nylon lines. An auxiliary pump/blower is usually required to avoid delays in the sample from the furthest point reaching the detector. This delay is calculated from the volume and layout of the manifold and the capacity of the pump. It must be used as a factor or correction in the penetration calculations for adsorbers.

HA-C-1440

Since most detectors are designed to operate with the sample being drawn from ambient or near-ambient pressures, care is required in connecting the detector to an auxiliary blower system. It must not be "hard piped" to a closed system or subject to the positive output pressure of the blower. An open hole in the main sample line or a tee before the blower is preferred. The setup must not allow dilution air to enter the detector sample line (dilution of the sample past the takeoff point is not relevant). It must not allow velocity pressure from the auxiliary blower to change the pressure in the detector sample. The connection must be firm enough that no change will occur during the test.

Copyright ASME International
Provided by IHS under license with ASME
No reproduction or networking permitted without license from IHS
Not for Resale

NONMANDATORY APPENDIX HA-D
PERFORMANCE TEST FOR QUALIFICATION OF SAMPLING MANIFOLDS

ARTICLE HA-D-1000

HA-D-1100 PURPOSE

The purpose of this test is to provide objective verification that installed sampling manifolds provide a representative sample of subsequent component bank leak tests performed in the field per Section TA.

HA-D-1200 LIMITS

This is a factory test for sampling manifolds. It cannot be performed satisfactorily in the field.

HA-D-1300 TEST REQUIREMENTS

HA-D-1310

The housing, component banks, and sampling manifolds shall be complete and in their final ready-for-use configuration. Any later modification shall invalidate prior tests and require a retest.

HA-D-1320

Aerosol shall be used to qualify all sampling manifolds and challenge agent sampling manifolds.

HA-D-1330

Aerosol shall be used to qualify all sampling manifolds and challenge agent sampling manifolds.

HA-D-1340

The test shall be conducted at the housing design airflow rate ±10%. If more than one flow rate is required for operation, a manifold performance test shall be performed at each flow rate. If the design has a variable flow rate, then the minimum and maximum (10% for each) shall be used to perform the tests. Airflow distribution testing per HA-5600 shall be performed as a prerequisite to a manifold qualification test.

HA-D-1350

To assure complete mixing, a temporary duct and fan shall be provided downstream of the housing. The duct shall be long enough and have provisions sufficient to guarantee mixing so that a representative single point sample may be taken. Baffles, vanes, or other means of providing good mixing are acceptable in the duct assembly. They shall be clearly shown on the sketch and documented sufficiently for independent review.

In other configurations, the number of sample points shall be in accordance with Chapter 9 of Testing of Ventilation Systems of Industrial Ventilation, 23rd Edition. If necessary the number of sampling points, mixing, or duct length shall be increased so each sampled concentration is within ±5% of the calculated average.

HA-D-1360

The temporary duct and fan assembly shall be leak tight so that no dilution air can enter or leave the test

Copyright ASME International
Provided by IHS under license with ASME
No reproduction or networking permitted without license from IHS
Not for Resale

boundary. This shall be confirmed by a documented leak test in accordance with Section TA.

HA-D-1370

A visual inspection using applicable articles of Section TA is required. The visual inspection checklist shall be used after the test setup is completed, but before the test is performed. Nonconformances shall be resolved before the test is performed.

HA-D-1380

Test engineers and technicians shall be qualified in accordance with ASME NQA-1. A Level II Test Engineer shall prepare the test procedure and review the test results for acceptance.

HA-D-1400 TEST METHOD

HA-D-1410

The basis of the test is to compare the single-point aerosol concentration taken in the temporary test duct with that obtained from the sampling manifold under test.

HA-D-1420

Test data shall be taken with all filter elements and adsorbent installed without any artificial leak paths, as follows:

(a) the artificial leak paths shall be located, one at a time, to simulate leaks in the filter/adsorbent face, the frame-to-wall welds (including floor and ceiling), and gasket-to-frame seals (where applicable), and at structural welds on Type III adsorbers; and

(b) the number and exact placement of the artificial leak paths depends on the size and configuration of the bank and housing, but shall be not less than ten with at least four at frame-to-wall floor and ceiling locations. Tests with multiple leak paths are permissible after the required ten tests with single leak paths are performed.

HA-D-1430

Aerosol concentration shall be by traverse at a single point measured in the temporary duct and while using the sampling manifold. For each test condition the single-point sample concentration shall be the average of the traverse readings in the temporary duct.

HA-D-1440

If the sampling manifold concentration does not agree with the single-point sample result within 5%, the sample manifold shall be modified to produce a result within ±5% for all test conditions.

HA-D-1441

A useful method to locate nonuniform concentration is to scan in front of the manifold while the challenge aerosol is flowing. This will provide data to assist the redesign/modification of the manifold.

HA-D-1500 ACCEPTANCE CRITERIA

HA-D-1510 SINGLE-POINT SAMPLE

All traverse concentration measurements taken at the single-point sample location cross section shall be within ±5% of the calculated average concentration.

HA-D-1520 SAMPLE MANIFOLD

The sample manifold concentration shall be within ±5% of the single-point sample concentration for all artificial leak paths.

HA-D-1600 DOCUMENTATION

HA-D-1610

A sketch of the factory test setup shall be provided. It shall provide sufficient dimensions and detail to allow analysis by the Owner or designee prior to the start of testing.

HA-D-1620

The details of the test instruments for airflow and aerosol generation and detection shall be provided. They shall include, as a minimum, the manufacturer, model, serial number, and calibration date.

HA-D-1630

The test procedures shall be submitted to the Owner or designee for review prior to the start of testing. All data shall be presented in a manner that will allow independent analysis of the test results.

Copyright ASME International
Provided by IHS under license with ASME
No reproduction or networking permitted without license from IHS
Not for Resale

HA-D-1640

The location, date, and the names of test engineers/technicians shall be listed with signatures.

HA-D-1650

An ASME NQA-1, Level II Engineer shall sign the test report to be submitted to the Owner for review prior to shipping the unit.

HA-D-1700 ACCEPTANCE OF RESULTS

HA-D-1710

The Owner or designee shall review and approve the detailed test procedure, including drawings of the temporary duct and hardware, before the test is performed and may provide comments to the testing organizations.

HA-D-1720

The Owner or designee shall review the results of the test before the housings are shipped. It is recommended that such approval be revised before the test assembly is dismantled. The Owner or designee shall advise the manufacturer, in writing, of acceptance of sampling manifold qualification test results prior to the unit's being shipped.

Copyright ASME International
Provided by IHS under license with ASME
No reproduction or networking permitted without license from IHS
Not for Resale

SECTION RA
REFRIGERATION EQUIPMENT

RA-1000	**Introduction**	234
RA-1100	Scope	234
RA-1200	Purpose	234
RA-1300	Applicability	234
RA-1400	Definitions and Terms	234
RA-2000	**Referenced Documents**	235
RA-3000	**Materials**	236
RA-3100	General Material Requirements	236
RA-4000	**Design Requirements**	238
RA-4100	Purpose	238
RA-4200	Design Specification	238
RA-4300	Equipment Performance Requirements	239
RA-4400	Mechanical Design Requirements	239
RA-4500	Structural Design Requirements	240
RA-4600	Electrical Design Requirements	241
RA-4700	Maintenance Criteria	241
RA-5000	**Inspection, Rating, and Testing**	242
RA-5100	Rating	242
RA-5200	Testing	242
RA-5300	Examination	244
RA-6000	**Fabrication and Installation**	245
RA-6100	Welding and Brazing	245
RA-6200	Cleaning, Finishing, and Coating	246
RA-6300	Installation	246
RA-7000	**Packaging, Shipping, Storage, and Handling**	247
RA-7100	General Requirements	247
RA-7200	Packaging	247
RA-7300	Shipping	247
RA-7400	Storage	247

Copyright ASME International
Provided by IHS under license with ASME
No reproduction or networking permitted without license from IHS
Not for Resale

RA-7500	Handling and Rigging	247
RA-7600	Assembly, Erection, and Start-up	247
RA-8000	**Quality Assurance**	249
RA-8100	General	249
RA-9000	**Nameplates, Stamping, and Records**	250
RA-9100	General Requirements	250
RA-9200	Nameplates and Stamping	250
RA-9300	Data Reports	250

Forms

RA-1	Manufacturer's Data Report for Section RA Non-ASME Nuclear Vessels (Customary)	251
RA-M1	Manufacturer's Data Report for Section RA Non-ASME Nuclear Vessels (SI)	253
RA-2	Centrifugal Compressor Test Record	255
RA-2a	Centrifugal Compressor Oil Pump Pressure Test	256
RA-2b	Centrifugal Compressor Pressure Test Record	257
RA-3	Reciprocating Scroll/Screw Compressor Test Record	258
RA-3a	Reciprocating Scroll/Screw Compressor Pressure Test Record	259
RA-4	Electrical Test Record — Controls and Control Panels	260
RA-5	Performance Test Record (Customary)	261
RA-M5	Performance Test Record (SI)	263

Mandatory Appendices

RA-I	Performance Testing of Chilled Water Refrigeration Unit (Customary)	265
RA-MI	Performance Testing of Chilled Water Refrigeration Unit (SI)	269
RA-II	Mandatory List of Instrumentation Functions and Control Functions	273

Nonmandatory Appendices

RA-A	Division of Responsibility	274
RA-B	Typical External Interface Diagrams	277

Copyright ASME International
Provided by IHS under license with ASME
No reproduction or networking permitted without license from IHS
Not for Resale

ARTICLE RA-1000
INTRODUCTION

RA-1100 SCOPE

This section covers requirements for the performance, design, materials, construction, acceptance testing, and quality assurance for nuclear safety-related refrigeration equipment used in nuclear power plants. Refrigeration equipment covered by this section constitutes equipment used to refrigerate fluids that ultimately maintain operating personnel habitability and process cooling for nuclear power plant systems. A nuclear power plant process system, as used herein, is defined in AA-1130. Criteria are established for the equipment operability, reliability, and testability in order for the equipment to perform in accordance with the design specification. Nonmandatory Appendix RA-A is a guide for the determination of responsibilities under this section.

RA-1200 PURPOSE

The purpose of this section is to assure that refrigeration equipment used in nuclear power plants is adequate in all aspects of performance, design, and construction.

RA-1300 APPLICABILITY

(a) This section provides requirements for new refrigeration equipment. It is not intended to provide the criteria for inservice deterioration, which may occur due to unspecified corrosion, erosion, or instability of material. These effects shall be taken into account in the design specification with a view toward the equipment design life — the end purpose for which the equipment shall be used — and the system in which it is to be installed.

(b) This section provides requirements only for refrigeration equipment used for nuclear safety-related air and gas treatment.

(c) This section addresses only general system requirements for instrumentation and control associated with refrigeration equipment. It does not address requirements for materials or component design for instrumentation and controls. For instrumentation and control requirements, see Section IA (in the course of preparation).

(d) This section does not provide requirements for the sizing of refrigeration equipment, nor does it provide requirements for the design of the system in which the equipment is to be installed.

(e) This section does not address system single failure criteria or redundancy.

(f) This section does not provide requirements for drivers or drives for open refrigeration equipment.

(g) This section does not provide requirements for refrigerant transfer system pumps and compressors.

(h) This section does not provide requirements for refrigerant direct expansion air cooling coils used in refrigeration systems. The boundary of this exclusion is from the inlet of the refrigerant distributor through the coil outlet nozzle.

RA-1400 DEFINITIONS AND TERMS

See Glossary, Section AA. For additional refrigeration terms and definitions, see ASHRAE Terminology of Heating, Ventilation Air Conditioning and Refrigeration.

Copyright ASME International
Provided by IHS under license with ASME
No reproduction or networking permitted without license from IHS
Not for Resale

ARTICLE RA-2000
REFERENCED DOCUMENTS

(03)

The codes, standards and specifications referenced below shall supplement those documents listed in Section AA. The latest edition shall be used if no publication date is specified.

ANSI/ARI 450-99, Water Cooled Refrigerant Condensers, Remote Type

ARI 480-95, Refrigerant-Cooled Liquid Coolers, Remote Type

ARI 550/590-98, Water Chilling Packages Using the Vapor Compression Cycle

Publisher: Air Conditioning and Refrigeration Institute (ARI), 4100 North Fairfax Drive, Arlington, VA 22203

ANSI/ASHRAE 15-94, Safety Code for Mechanical Refrigeration

ASHRAE Terminology of Heating, Ventilation, Air-Conditioning, & Refrigeration, Second Edition, 1991

Publisher: American Society of Heating, Refrigerating, and Air-Conditioning Engineers, Inc. (ASHRAE), 1791 Tullie Circle, NE, Atlanta, GA 30329

ASME/ANSI B31.5-92, Refrigeration Piping

Publisher: American Society of Mechanical Engineers (ASME International), Three Park Avenue, New York, NY 10016-5990; Order Department: 22 Law Drive, Box 2300, Fairfield, NJ 07007-2300

ANSI/IEEE 43-1974 (R91), Recommended Practice for Testing Insulation Resistance of Rotating Machinery

IEEE 118-1978 (R92), Standard Test Code for Resistance Measurement

IEEE 382-1996, Standard for Qualification of Actuators for Power Operated Valve Assemblies With Safety-Related Functions for Nuclear Power Plants

Publisher: Institute of Electrical and Electronics Engineers (IEEE), 445 Hoes Lane, Piscataway, NJ 08854

Copyright ASME International
Provided by IHS under license with ASME
No reproduction or networking permitted without license from IHS
Not for Resale

ARTICLE RA-3000
MATERIALS

RA-3100 GENERAL MATERIAL REQUIREMENTS

(a) All materials used shall have properties and composition suitable for the application as defined by the design specification and the operating environmental conditions, as defined in RA-4200(b). When the equipment application requires the use of specific materials, these materials shall be explicitly defined in the design specification. All materials expressly prohibited or limited shall be explicitly described in the design specification.

(b) Deterioration of water-side materials caused by unspecified service, such as corrosion or erosion, is outside the scope of this Code. Water-side materials suitable for the conditions must be stated in the design specification, with special attention being given to the effects of service conditions upon the properties of the materials. Materials for the refrigerant side shall be selected to conform with paragraph 9.1 of ANSI/ASHRAE 15.

(c) The rules of this section do not apply to any instruments or the permanently sealed, fluid-filled tubing systems furnished with any instruments that function as temperature or pressure responsive devices.

RA-3110 PRESSURE RETAINING MATERIALS

(a) All materials that form the pressure boundary of systems subject to ASME Code, Section III, requirements shall meet the material requirements for Class 3 components of that Code (Article ND-2000).

(b) All material that represents a pressure boundary of systems not subject to ASME Code, Section III, requirements shall meet the applicable requirements for materials as specified in the ASME Code, Section VIII, Division 1.

(c) All pressure boundary materials that are exempted by the codes listed in RA-3110(a) and (b) shall meet the material requirements ASME/ANSI B31.5, Chapter III, or shall meet the material requirements of paragraph 8.1 of ANSI/ASHRAE 15.

Components constructed from manufactuer's qualified material (AA-1130) shall have their suitability demonstrated by test per RA-5213 in lieu of the requirements stated in Article AA-3000.

RA-3120 COMPONENT SUPPORT MATERIALS

(a) All materials that form the support structure for ASME Code, Section III, components within the definitions provided in RA-4510, shall meet the material requirements specified in Article NF-2000 of Section III of the ASME Code.

(b) All materials that form the support structure of non-ASME Code, Section III, components shall be selected from ANSI/ASME B31.1, Chapter IV, or Section II of the ASME Code.

RA-3130 ELECTRICAL MATERIALS

Electrical component materials are not within the scope of this section, except as covered by the referenced IEEE documents.

RA-3140 PUMP AND COMPRESSOR MATERIALS

It is recognized that there are materials used in the design and fabrication of lubrication pumps and compressors that are unique to particular manufacturers (see AA-1130). Proof of suitability of these materials, as related to the pressure boundary, will be demonstrated by test and documented by using Data Report Forms RA-2, RA-2a, RA-2b, RA-3, and RA-3a.

Copyright ASME International
Provided by IHS under license with ASME
No reproduction or networking permitted without license from IHS
Not for Resale

RA-3150 VALVE, PIPING, AND FITTING MATERIALS

RA-3151 Refrigerant

Valve, piping, and fitting materials for refrigeration systems shall meet the material requirements of Chapter III of ANSI/ASME B31.5, and paragraph 9.1 of ANSI/ASHRAE 15.

RA-3152 Water

(a) Water valves, fittings, and piping that form the pressure boundary of systems subject to the ASME Code, Section III, requirements shall meet the material requirements for Class 3 of that Code (Article ND-2000).

(b) Valves, piping, and fittings for water systems (refrigerant transfer systems) that are not subject to the ASME Code, Section III, requirements shall meet the material requirements of Chapter III of ANSI/ASME B31.1.

RA-3153 Lubrication

Valves, piping, and fittings for oil circuits of lubrication subsystems shall meet the material requirements of Chapter III of ASME/ANSI B31.5, or be as specified in RA-3110(c).

RA-3154 Control

Valve and piping materials for control systems shall be compatible with the interfacing system materials and shall meet the requirements of Chapter III of ASME/ANSI B31.1 or ASME/ANSI B31.5.

RA-3160 WELDING AND BRAZING MATERIALS

(a) Materials for welding and brazing of components that form the pressure boundary of a system subject to the requirements of the ASME Code, Section III, shall meet the requirements specified in ND-2400 of that Code.

(b) Welding materials for structures and supports of the ASME Code, Section III, Subsection ND, pressure vessels shall meet the requirements of Subsection NF of that Code.

(c) Welding and brazing materials for components that form the pressure boundary of a system subject to the requirements of ASME/ANSI B31.5 shall be as specified in Chapter V of ASME/ANSI B31.5.

(d) Materials for welding and brazing of components not covered by the ASME Code, Section III, Subsections ND and NF, ASME/ANSI B31.1, or ASME/ANSI B31.5, shall be in accordance with AA-6310(e) and AA-6410(e).

Copyright ASME International
Provided by IHS under license with ASME
No reproduction or networking permitted without license from IHS
Not for Resale

ARTICLE RA-4000
DESIGN REQUIREMENTS

RA-4100 PURPOSE

The purpose of this article is to establish the minimum design requirements for nuclear safety-related refrigeration equipment used in nuclear power plant applications.

RA-4200 DESIGN SPECIFICATION

The design specification shall clearly establish the purpose (design function) of the refrigeration equipment, its safety classifications, and any external interface safety classification. Typical external interface diagrams are shown in Nonmandatory Appendix RA-B.

(a) The design specification shall include performance requirements for all nuclear power plant operating modes wherein the equipment is expected to perform an intended function as defined in applicable ANSI documents. The event categories, design requirements, and safety functions for each safety class are defined in ANSI/ANS 51.1 for pressurized water reactors and in ANSI/ANS 52.1 for boiling water reactors.

(b) For each of the applicable operating conditions described in RA-4200(a), the following environmental and associated service conditions shall be specified in the design specification for the equipment.

(1) Temperature. The minimum and maximum external operating temperatures [°F (°C)] to which the machine will be subjected shall be specified.

(2) Pressure. The minimum and maximum external operating pressures [psig (kPa gage)] to which the machine will be subjected shall be specified.

(3) Humidity. The minimum and maximum external operating humidities [percent (%)] to which the machine will be subjected shall be specified.

(4) Radiation Levels — Alpha, Beta, and Gamma. Both the maximum and cumulative dosage levels [rads (grays)] to which the machine will be exposed shall be specified.

(5) Chemicals. Corrosion allowances shall be specified for equipment subject to thinning by corrosion. Concentration of each chemical shall be specified.

(6) Structural Design Criteria. Structural loads to which the machine will be subjected shall be specified. These loads shall include, but are not limited to, the loads listed in AA-4211. If a load is not applicable, it shall be so stated. The structural interface between open refrigeration equipment and its drive and drivers shall be included in these loads.

(7) Electrical Transients. Any electrical power transients to which the machine may be subjected shall be given. These abnormal conditions are stated in IEEE 323 and include variations in service parameters such as voltage and frequency. The minimum, maximum, and average values for all variables, as well as their duration, shall be specified.

(8) Cooling Load Requirements. The maximum cooling load for which the machine is to be designed, expressed in tons of refrigeration (kW), shall be specified (see RA-1400).

(9) Cooling Load Profile and Time History. The machine is not expected to operate at full load, 24 hr a day for 40 years. A cooling load profile that identifies the range of load that the machine must be designed to accommodate shall be specified. For example, if the machine will be operated at full load at the equipment performance requirements (see RA-4300) of 18 hr a day and then at reduced load for the balance of the time, then this load profile shall be specified. The expected number of start–stop cycles during the life of the machine shall be specified.

(10) Restart Conditions. Conditions that are other than those identified in RA-4300 and that may affect the restart of the machine are defined as restart conditions. For example, if the machine must be restarted 10 min after the first start, or if it must be restarted at 75% of voltage, these conditions shall be specified.

(11) Water-Side Design Pressures for Evaporator and Condenser. The maximum and normal water-side pressures to which pressure vessels will be subjected

Copyright ASME International
Provided by IHS under license with ASME
No reproduction or networking permitted without license from IHS
Not for Resale

shall be given in psig (kPa gage). If the water sides are to be exposed to subatmospheric pressures, that information shall also be specified.

(12) Refrigeration Equipment Exposed to Harsh Environments. Temperature, pressure, relative humidity, and radiation time histories shall be provided for use in qualifying all refrigeration equipment Class 1E electrical equipment, cabling, controls, and accessories in accordance with IEEE 323.

(c) Structural Load Definition. Structural loads to be considered in the design of refrigeration equipment covered by this Code are defined in AA-4211. The magnitude and direction of all external loads shall be given in the design specification. Superimposed loads of a cyclical nature shall be clearly defined, including the occurrence of evaporator and condenser water flow variation or reversal, or both, where applicable. Loads selected shall be shown, and clearly identified, in the structural analysis report for the equipment.

RA-4300 EQUIPMENT PERFORMANCE REQUIREMENTS

The required performance of the refrigeration equipment, under the applicable conditions of RA-4200(a), shall be clearly specified in the design specification. The minimum performance requirements to be so specified shall be:

(a) design load, tons of refrigeration, kW;

(b) entering and leaving evaporator fluid temperature, °F (°C);

(c) minimum and maximum entering condenser fluid temperature, °F (°C);

(d) evaporator and condenser maximum and minimum flow rates, gal/min (m^3/min);

(e) evaporator and condenser fouling factors, hr-ft^2 – °F/Btu (m^2 – °C/W);

(f) evaporator and condenser tube material and nominal wall thickness, in. (mm) (corrosion and erosion effects should be considered);

(g) liquid to be cooled and condenser cooling medium, including type, properties, and level of impurities in coolant;

(h) power supply voltage, phases, and frequency at the terminals of motors, starters, and controls for primary drives and auxiliaries;

(i) maximum allowable pressure drop for liquid to be cooled and condenser cooling medium, ft (m);

(j) maximum evaporator and condenser tube fluid velocity, ft/sec (m/min).

RA-4400 MECHANICAL DESIGN REQUIREMENTS

RA-4410 WATER-SIDE SYSTEM

RA-4411 Code Class

Water-side pressure vessel components of the refrigeration equipment shall be, as a minimum requirement, the same ASME Code class as the fluid system in which they are to be installed. The design specification shall clearly identify this Code class.

RA-4412 Boundaries

The design specification shall define the boundaries of the water-side pressure vessels as required by Section III, NCA-3254, of the ASME Code.

RA-4420 REFRIGERANT SIDE SYSTEM

RA-4421 Heat Exchanger Design

The refrigerant side of all heat exchangers shall, as a minimum, meet the design requirements of Section VIII of the ASME Code.

RA-4422 Compressor

This paragraph identifies the design boundaries of refrigeration compressors. Refrigerant compressors include both the hermetic and open type used in either centrifugal, reciprocating, scroll, or screw refrigeration machines. Refrigerant transfer system compressors are excluded from this paragraph. Supporting structures, including integral casting, shall be analyzed per the requirements of RA-4510.

RA-4422.1 Centrifugal Compressor

(a) Hermetic

(1) The boundary of the hermetic compressor is defined as all refrigerant containing parts located between the first flange of the suction connection of the compressor and the first flange of the discharge connection of the compressor. It includes those components whose primary function is related to the compression of refrigerant (e.g., motor, impellers, volutes, shafts, bearings, and seals), but does not include secondary components whose function is to support compressor operation (e.g., lubrication system, compressor base, capacity control components and assemblies, and overtemperature protection devices). Supporting structures are covered in other sections of this Code.

Copyright ASME International
Provided by IHS under license with ASME
No reproduction or networking permitted without license from IHS
Not for Resale

(2) The design of the refrigerant containing portions of the compressor shall be in accordance with ANSI/ASHRAE 15.

(b) *Open*

(1) The boundary is the same as the hermetic compressor except the driver is not considered within the scope of this Code. This boundary ends at the shaft coupling and does not include the coupling itself. This Code does not address drives; therefore, the compatibility of the drives with the driven equipment shall be assured by the driver purchaser.

(2) The design of refrigerant containing portions of the compressor shall meet the requirements of ANSI/ASHRAE 15.

RA-4422.2 Reciprocating Compressor

(a) *Hermetic*

(1) The boundary is defined as all refrigerant containing components between the suction manifold and the discharge manifold. It includes those components whose primary function is related to the compression of refrigerant, e.g., motor, piston(s), cylinder head(s), and compressor casing.

(2) The design of refrigerant containing portions of the compressor shall meet the requirements of ANSI/ASHRAE 15.

(b) *Open*

(1) The boundary is the same as the hermetic compressor except the driver is not considered within the scope of this paragraph. The boundary ends at the shaft coupling and does not include the coupling.

(2) The design of refrigerant containing portions of the compressor shall meet the requirements of ANSI/ASHRAE 15.

RA-4422.3 Screw/Scroll Compressor

(a) *Hermetic*

(1) The boundary is defined as all refrigerant containing components between the suction and the discharge manifold. It includes those components whose primary function is related to the compression of refrigerant, e.g., motor, screw/scroll rotors, unloading mechanism, and compressor casing.

(2) The design of refrigerant containing portions of the compressor shall meet the requirements of ANSI/ASHRAE 15.

(b) *Open*

(1) The boundary is the same as the hermetic compressor except the driver is not considered within the scope of this paragraph. The boundary ends at the shaft coupling and does not include the coupling.

(2) The design of refrigerant containing portions of the compressor shall meet the requirements of ANSI/ASHRAE 15.

RA-4423 Refrigerant System Interconnecting Piping, Valves, and Fittings

The refrigerant system interconnecting piping, valves, and fittings shall meet the requirements of ASME/ANSI B31.5 and ANSI/ASHRAE 15.

RA-4424 Transfer System

The refrigerant transfer system shall either meet the same requirements as the system to which it is connected, or shall be isolated mechanically and electrically from the system whenever the refrigeration equipment is performing a design function.

RA-4430 LUBRICATION SYSTEM

RA-4431 Piping Valves and Fittings

The lubrication system piping valves and fittings shall be in accordance with ASME/ANSI B31.5.

RA-4432 Pump

The design of the lubrication pump (if required) shall be in accordance with the requirements of ANSI/ASHRAE 15. Pressure boundary portions of the pump shall be designed, constructed, and assembled to meet the requirements of para. 9.11.1 of ANSI/ASHRAE 15.

RA-4500 STRUCTURAL DESIGN REQUIREMENTS

RA-4510 GENERAL

All ASME Code, Section III, equipment and supporting structures shall be designed according to the rules established in the applicable subsections of that Code. Equipment classified as non-ASME Code, and the equipment as a whole, shall be designed, analyzed, or tested in accordance with the structural requirements of Article AA-4000. Any components, assemblies, piping, tubing, and supports not required for a design basis event (as defined in the design specification) shall be so noted and a justification shall be given for their exclusion. Applicable structural requirements and load definitions are given in RA-4200(c).

Copyright ASME International
Provided by IHS under license with ASME
No reproduction or networking permitted without license from IHS
Not for Resale

RA-4520 EQUIPMENT ATTACHMENT BOUNDARY

The attachment of the equipment to the foundation shall be designed according to AA-4360.

RA-4600 ELECTRICAL DESIGN REQUIREMENTS

All electrical and electromechanical equipment including, but not limited to, motors, wiring, and control components that is required for the refrigeration equipment to perform its design function during all nuclear power plant operating modes [see RA-4200(a)], and hereafter referred to as class 1E components as defined in ANSI/IEEE 323, shall be environmentally qualified in accordance with ANSI/IEEE 323. Qualification of these components to ANSI/IEEE 323 can be accomplished by qualification in accordance with the applicable subtier documents of ANSI/IEEE 323. If the power supply system for the refrigeration equipment includes fast bus transfer capability, the design specification shall provide pertinent voltage drop and transfer time data.

RA-4610 ELECTRIC MOTORS

All Class 1E motors shall be designed and tested in accordance with ANSI/IEEE 334, IEEE 112A, and NEMA MG-1. Non-Class 1E motors shall be designed and tested in accordance with IEEE 112A and NEMA MG-1 to ensure operability.

RA-4620 ELECTRIC VALVE AND VANE ACTUATORS

All Class 1E electric valve and vane actuators shall meet the requirements of IEEE 382.

All non-Class 1E valve operators shall be suitable for the design condition as specified in the design specification.

RA-4630 CONTROL SYSTEMS

All Class 1E control components and control panels shall meet the requirements of ANSI/IEEE 323. The design specification shall identify the required NEMA enclosure designation. The instrumentation and control functions shown in Mandatory Appendix RA-II are the minimum that shall be provided by the Manufacturer. Other functions, or provisions for functions, shall be specified in the design specification. All non-Class 1E control components shall be suitable for the design conditions specified in the design specification.

(a) Controls shall provide for the proper and safe operation of the equipment under all operating conditions, including the postulated design basis event and loss of coolant accident (LOCA) event.

(b) The design specification shall describe any equipment monitoring required and note whether provisions are to be made for remote annunciation. If the external electrical system is a Class 1E system, an interface between the machine electrical systems and external electrical systems must be identified in the design specification as being a Class 1E interface.

(c) Control system devices that could prevent or limit the machine from performing its design function during all of the nuclear power plant operating modes as defined in RA-4200(a) are not permitted. Equipment safety devices are excluded from this requirement.

RA-4640 ELECTRICAL WIRING, SPLICES, AND CONNECTIONS

All wiring connections for system internal wiring and for connecting points for field wiring shall be made at terminal blocks. Splices between terminal points shall not be used. Wiring from components located inside the control panel(s) shall be connected to terminal blocks within the panels before being routed outside the panels. All terminal connectors for control wiring shall be the ring type.

RA-4700 MAINTENANCE CRITERIA

(a) The equipment manufacturer's design shall ensure that all components that require maintenance are accessible for servicing. All components shall be designed and installed to facilitate servicing or replacement.

(b) The equipment manufacturer shall provide maintenance and access design information for use by the Owner or his designee.

Copyright ASME International
Provided by IHS under license with ASME
No reproduction or networking permitted without license from IHS
Not for Resale

ARTICLE RA-5000
INSPECTION, RATING, AND TESTING

The requirements of Article AA-5000 shall apply, except where expanded upon, modified, or otherwise exempted by the following.

(03) **RA-5100 RATING**

Performance ratings shall be based upon the actual design conditions supplied by the design specification, rated in accordance with ARI 550/590, and tested in accordance with Mandatory Appendix RA-I.

RA-5200 TESTING

RA-5210 PRESSURE VESSEL TESTING

RA-5211 ASME Section III Vessels

ASME Boiler and Pressure Vessel Code, Section III, pressure vessels shall be hydrostatically or pneumatically tested in accordance with the requirements of Section III of the Boiler and Pressure Vessel Code, ND-6100 through ND-6400.

RA-5212 ASME Section VIII Vessels

ASME Boiler and Pressure Vessel Code, Section VIII, Division 1, pressure vessels shall be hydrostatically or pneumatically tested in accordance with the requirements of UG-99, UG-100, or UG-101 and UG-102. Section VIII, Division 2, pressure vessels shall be hydrostatically or pneumatically tested in accordance with the requirements of Part AT.

RA-5213 Non-ASME Pressure Vessels

RA-5213.1 Non-ASME pressure vessels shall be tested in accordance with the requirements of the code or standard specified in the design specification. Where not specified in the design specification, non-ASME pressure vessels shall:

(a) be tested at a hydrostatic pressure of two times the design working pressure or pneumatically tested at a pressure of $1\frac{1}{2}$ times the design working pressure, provided that the design working pressure is less than or equal to 15 psig (103 kPa gage); or

(b) be tested in accordance with the requirements of Section VIII, provided that the design working pressure is greater than 15 psig (103 kPa gage).

RA-5213.2 If the requirements of RA-5213.1(a) and (b) are invoked by not specifying a code or standard, the equipment manufacturer shall document the tests using Data Report Form RA-1, RA-2, or RA-3, as applicable.

RA-5214 Other Non-ASME Components

RA-5214.1 Hermetic Centrifugal Compressor Testing. The following factory tests shall be performed on the compressors and hermetic motor housings.

(a) Pressure Test. The compressor and hermetic motor housings shall be strength tested at the higher of either (1) or (2) below:

(1) 45 psig (310 kPa gage)

(2) $1\frac{1}{2}$ times the design working pressure (hydrostatic) or $1\frac{1}{4}$ times the design working pressure (pneumatic).

The pressure tests may be performed individually, as a discrete assembly, or as an assembly with other refrigeration machine components. Tests shall be documented using Data Report Form RA-2b.

(b) Leak Test. A leak test shall be performed at the design working pressure of the compressor and hermetic motor housing assembly either as a discrete assembly, or as a subassembly or a complete assembly with other refrigeration machine components. No individual leak rates shall be greater than 0.1 oz (0.28 g) per year. Tests shall be documented using Data Report Form RA-2b.

(c) Mechanical Run Test. The compressor and motor assembly shall be run using the Manufacturer's approved

Copyright ASME International
Provided by IHS under license with ASME
No reproduction or networking permitted without license from IHS
Not for Resale

test fluid to check for excessive vibration and proper operation of the lubrication system. This test shall be documented using Data Report Form RA-2.

RA-5214.2 Open Centrifugal Compressor Testing. The following factory tests shall be performed on the compressors.

(a) Pressure Test. The compressor shall be strength tested at the greater of either (1) or (2) below:

(1) 45 psig (310 kPa gage)

(2) 1½ times the design working pressure (hydrostatic) or 1¼ times the design working pressure (pneumatic).

The pressure tests may be performed individually, as a discrete assembly, or as a subassembly or a complete assembly with the other refrigeration machine components. Tests shall be documented using Data Report Form RA-2b.

(b) Leak Test. A leak test shall be performed at the design working pressure of the compressor either as a discrete assembly, or as a subassembly or complete assembly with the other refrigeration machine components. No individual leak rates shall be greater than 0.1 oz (0.28 g) per year. Tests shall be documented using Data Report Form RA-2b.

(c) Mechanical Run Test. The compressor shall be run using the Manufacturer's approved test fluid to check for excessive vibration and proper operation of the lubrication system. This test shall be documented using Code Data Report Form RA-2.

RA-5214.3 Hermetic Reciprocating Scroll and Screw Compressor Testing

(a) Proof Test. The high and low side of the compressor and motor housing assembly shall be either hydrostatically tested at a minimum of 1½ times or pneumatically tested at 1¼ times the design pressures as established by ANSI/ASHRAE 15, para. 9.2.

(b) Leak Test. The compressor and motor housing assembly shall be leak tested and proved tight at the design pressure(s) for which it is rated. No individual leak rates shall be greater than 0.1 oz (0.28 g) per year.

RA-5214.4 Open Reciprocating Scroll and Screw Compressor Testing

(a) Proof Test. The high and low side of the compressor shall be either hydrostatically tested at a minimum of 1½ times or pneumatically tested at 1¼ times the design pressures as established by ANSI/ASHRAE 15, para. 9.2.

(b) Leak Test. The compressor shall be leak tested and proved tight at the design pressure(s) for which it is rated. No individual leak rates shall be greater than 0.1 oz (0.28 g) per year.

(c) Documentation. Proof and leak tests shall be documented using Data Report Forms RA-3 and RA-3a. The Manufacturer's test log shall be submitted for record purposes.

RA-5214.5 Lubricating Oil Pump Testing. Each pump and the associated lubrication system piping, valves, and fittings that form a pressure boundary shall be hydrostatically or pneumatically pressure tested. The system shall be leak tight at 1½ times (hydrostatic) or 1¼ times (pneumatic) the maximum design pressure. The test shall be documented using Data Report Form RA-2a.

RA-5220 FUNCTIONAL TESTING

RA-5221 Electric Motors

RA-5221.1 Commercial Routine Test. This test shall include the following:

(a) no-load speed, current, and power test per IEEE 112A;

(b) locked rotor current test per IEEE 112A (all motors);

(c) routine tests per NEMA MG-1-12.51 (small motors) and NEMA MG-1-20.46 (large motors), temperature rise per Form A-1 of IEEE 112A with exclusion for hermetic motors;

NOTE: The starting torque in WK^2 requirements of NEMA MG-1-12.50 are excluded for hermetic motors.

(d) high potential test per NEMA MG-1-12.02 and MG-1-12.03 (small motors) and NEMA MG-1-20.47 (large motors);

(e) winding resistance test performed in accordance with IEEE 118;

(f) vibration test performed in accordance with NEMA MG-1-12.06 (small motors except for hermetic motors) and NEMA MG-1-20.53 (large motors). Hermetic motors may be tested at reduced voltage because of winding heating considerations. Test results for hermetic motors shall be in accordance with the requirements of NEMA MG-1-12.06.

(g) insulation resistance test performed in accordance with ANSI/IEEE 43;

(h) inspection of each motor for direction of rotation and, as applicable, the airflow of unidirectional cooling fans; and

(i) inspection of each motor for measurement of air gap with motor stator and rotor at a measured ambient temperature.

Copyright ASME International
Provided by IHS under license with ASME
No reproduction or networking permitted without license from IHS
Not for Resale

RA-5221.2 Other Tests. The following tests shall be performed on the prototype motor or the first of a series of identical motors supplied under a single order:

(a) a complete test as necessary in accordance with IEEE 112A to determine efficiency, power factor, locked rotor torque and current, breakdown torque, rated load current and slip, rated load temperature rise (except hermetic motors), and rated voltage (reduced voltage for hermetic motors) speed torque and speed current curves;

(b) a noise test per NEMA MG-1-12.49B (small motors) and NEMA MG-1-20.49B (large motors), except that hermetic motors are exempt; and

(c) a shaft current test per IEEE 112A for motors covered by NEMA MG-1-20 only, except that hermetic motors are exempt.

RA-5222 Equipment Functional Testing

The active refrigeration machine components shall be factory tested for proper and safe operation by the Manufacturer, using the Manufacturer's written procedures. Each complete refrigeration machine shall be given a factory performance test in accordance with Mandatory Appendix RA-I. Test results shall be documented using Data Report Form RA-5.

RA-5223 Control Functional Testing

All control components and assembled control panels shall be functionally tested by the Manufacturer. All wiring circuits shall have continuity and megger tests conducted by the Manufacturer. Test results shall be documented using Data Report Form RA-4.

RA-5224 Valve and Vane Electric Operator Functional Testing

All of the following tests shall be conducted by the original equipment manufacturer or the refrigeration equipment manufacturer. In either case, proof (Certificate of Conformance) that testing was done shall be made available to the Engineer.

RA-5224.1 All valve and vane operators shall be given a commercial routine test including:

(a) no-load speed and current per IEEE 112A;

(b) locked rotor current list per IEEE 112A and NEMA MG-1-12.51;

(c) high potential test per NEMA MG-1-12.02 and 12.03;

(d) insulation resistance test per ANSI/IEEE 43.

RA-5224.2 All valve and vane operators shall be given a type test on each device except when more than one is supplied, in which case only the first need be tested. This type test shall determine efficiency, power factor, locked rotor torque and current, breakdown torque, rated load current and slip, rated load temperature rise, and rated voltage speed torque and speed current. This test shall be performed in accordance with IEEE 112A.

RA-5224.3 An inspection of direction of rotation and, if applicable, the airflow of unidirection cooling fans shall be performed on each valve operator.

RA-5300 EXAMINATION

RA-5310 NONDESTRUCTIVE EXAMINATION

RA-5311 ASME Code, Section III, Components

Nondestructive examination of ASME Code, Section III, pressure retaining components and Section III, Subsection NF, component supports shall be in accordance with Section III, Articles NCA-5000, ND-5000, and NF-5000, and Code Section V.

RA-5312 ASME Code, Section VIII, Components

Nondestructive examination of ASME Code, Section VIII, pressure retaining components shall be in accordance with Section VIII, Division 1, UG-103.

RA-5313 Non-ASME Pressure Vessels

Nondestructive examination of non-ASME Code pressure retaining components and component supports shall be in accordance with the design specification and AA-6334. As a minimum, nondestructive examination shall consist of visual examination of weldments of pressure retaining components and component supports in accordance with ANSI/AWS D1.1, and shall be documented by a Certificate of Conformance.

Copyright ASME International
Provided by IHS under license with ASME
No reproduction or networking permitted without license from IHS
Not for Resale

ARTICLE RA-6000
FABRICATION AND INSTALLATION

The requirements of Article AA-6000 shall apply except where expanded upon, modified, or otherwise exempted by the following.

RA-6100 WELDING AND BRAZING

RA-6110 WELDING AND BRAZING PERFORMED ON ASME CODE, SECTION III, PRESSURE-RETAINING COMPONENTS AND SUPPORTS

Welding and brazing performed on ASME Code, Section III, pressure-retaining components and Section III, Subsection NF, component supports shall be in accordance with Code Sections III and IX.

RA-6120 WELDING AND BRAZING PERFORMED ON ASME CODE, SECTION VIII, PRESSURE-RETAINING COMPONENTS

Welding and brazing performed on Section VIII pressure-retaining components shall be in accordance with Code Sections VIII and IX.

RA-6130 WELDING AND BRAZING OF NON-ASME BOILER AND PRESSURE VESSEL CODE PRESSURE RETAINING COMPONENTS AND SUPPORTS

RA-6131 General

RA-6131.1 Scope. The requirements of this paragraph apply to the preparation of welding and brazing procedure specifications, the qualification of welding and brazing procedures, welders, brazers, and welding operators for all types of manual and machine welding and brazing processes, and the workmanship, weld quality, brazing quality, and inspection of weldments and brazed joints produced during the manufacture of refrigeration equipment and components.

RA-6131.2 Responsibility. Each Manufacturer is responsible for the welding and brazing done by his organization and shall conduct the tests required by this subparagraph to qualify the procedures used in the construction of the weldments and brazed joints built under this Code, the performance of brazers, welders, and welding operators who apply these procedures, and the inspections required for workmanship and quality verification.

RA-6131.3 Base Metal. Base metals to be joined by welding or brazing shall be one of those listed in Article RA-3000 or a combination of the base metals listed in Article RA-3000, provided the requirements of RA-6131.2 are met.

RA-6132 Welding Procedures

Qualification of the Manufacturer's welding procedure specifications shall be in accordance with the requirements of this section and either the ASME Code, Section IX, or ANSI/AWS D1.1. Once a choice is made between Section IX or ANSI/AWS D1.1, all qualifications shall be consistent with that particular document.

RA-6133 Welder and Welding Operator Qualifications

RA-6133.1 Welder or welding operator qualification testing, or both, shall be performed in accordance with the ASME Code, Section IX, or ANSI/AWS D1.1. Welding of the qualification test specimens shall be performed in accordance with the Manufacturer's welding procedure specification qualified in accordance with RA-6132.

Copyright ASME International
Provided by IHS under license with ASME
No reproduction or networking permitted without license from IHS
Not for Resale

RA-6133.2 Once a choice is made between Section IX or ANSI/AWS D1.1, all qualification shall be consistent with that particular document.

RA-6200 CLEANING, FINISHING, AND COATING

RA-6210 CLEANLINESS

Equipment internals shall, as a minimum, be shop cleaned and prepared for shipment per the requirements of ANSI/ASME NQA-2. Cleanliness levels shall be the same as for the fluid systems of which the equipment is a part. The design specification shall identify the internal cleanliness levels of the associated fluid system. As a minimum, ANSI/ASME NQA-2, Part 2.1, Class D cleanliness level shall apply.

RA-6220 SURFACE PREPARATION, FINISHING, AND COATING

Surface preparation, finishing, and coating of all equipment and components shall be in accordance with the design specification. In lieu of specified standards, cleaning, finishing, and coating shall be in accordance with the Manufacturer's written procedures. Surface preparation, finish, and coatings that are compatible with the environmental conditions stated in RA-4200(b) shall be provided in accordance with the design specification.

RA-6300 INSTALLATION

Installation and start-up of the equipment shall be performed under the Manufacturer's supervision and the requirements of AA-6600.

Copyright ASME International
Provided by IHS under license with ASME
No reproduction or networking permitted without license from IHS
Not for Resale

ARTICLE RA-7000
PACKAGING, SHIPPING, STORAGE, AND HANDLING

RA-7100 GENERAL REQUIREMENTS

(a) Packaging, shipping, receiving, storage, and handling requirements shall be in accordance with Article AA-7000, ANSI/ASME NQA-1 Basic Requirement 13 and Supplement 13S-1, ANSI/ASME NQA-2, Part 2.2, and the specific requirements of this article.

(b) When different levels of classification are required for different parts of the machine, the Manufacturer's procedures shall state how this will be addressed. If the Owner has specific requirements, the design specification shall so state.

RA-7200 PACKAGING

All relevant equipment listed in ANSI/ASME NQA-2, Part 2.2, paras. 2.2.2 and 2.2.3 shall meet the requirements of Packaging Levels B or C, as applicable, of NQA-2, Part 2.2, para. 3. The balance of the machine shall, as a minimum, meet the requirements of Packaging Level D of NQA-2, Part 2.2, para. 3.

RA-7300 SHIPPING

All relevant equipment listed in ANSI/ASME NQA-2, Part 2.2, paras. 2.2.2 and 2.2.3 shall meet the requirements of Shipping Levels B or C, as applicable, of NQA-2, Part 2.2, para. 4. The balance of the machine shall, as a minimum, meet the requirements of Shipping Level D of ANSI/ASME NQA-2, Part 2.2, para. 4.

RA-7400 STORAGE

All relevant equipment listed in ANSI/ASME NQA-2, Part 2.2, paras. 2.2.2 and 2.2.3 shall meet the requirements of Storage Levels B or C, as applicable, of ANSI/ASME NQA-2, Part 2.2, para. 6. The balance of the machine shall, as a minimum, meet the requirements of Storage Level D of ANSI/ASME NQA-2, Part 2.2, para. 6.

RA-7500 HANDLING AND RIGGING

Handling and rigging requirements shall be in accordance with AA-6610 and the following.

All relevent equipment listed in ANSI/ASME NQA-2, Part 2.2, paras. 2.2.2 and 2.2.3 shall meet the requirements of Handling Levels B or C, as applicable, of ANSI/ASME NQA-2, Part 2.2, para. 7. The balance of the machine shall, as a minimum, meet the requirements of Handling Level D of ANSI/ASME NQA-2, Part 2.2, para. 7.

RA-7600 ASSEMBLY, ERECTION, AND START-UP

RA-7610 FIELD-ASSEMBLED OR FIELD-ERECTED EQUIPMENT

Where equipment requires component assembly during final installation, the equipment manufacturer shall provide detailed written procedures for making the proper final assembly in accordance with AA-6620.

RA-7620 EXTERNAL CONNECTIONS AND SERVICES

(a) All external connections and services essential to the proper and safe operation of the refrigeration equipment supplied by the Owner or his designee shall be, as a minimum, governed by the same criteria as those specified as applicable to the refrigeration equipment itself.

(b) The equipment manufacturer shall be responsible for advising the Owner or his designee of connections

Copyright ASME International
Provided by IHS under license with ASME
No reproduction or networking permitted without license from IHS
Not for Resale

or services required for the proper and safe operation of the equipment as specified in the design specification.

RA-7630 START-UP AND PERIODIC TESTING

The equipment Manufacturer shall provide detailed start-up, inspection, and testing procedures with his equipment. Post-startup and periodic testing shall be the responsibility of the Owner.

The information required by RA-9200 shall be applied to a separate, corrosion-resistant namplate permanently attached to the machine by suitable means. The method of attachment shall not affect the structural or operational integrity of the machine.

Copyright ASME International
Provided by IHS under license with ASME
No reproduction or networking permitted without license from IHS
Not for Resale

ARTICLE RA-8000
QUALITY ASSURANCE

RA-8100 GENERAL

Equipment and materials fabricated under this section shall be manufactured in accordance with the provisions of the Manufacturer's quality assurance program. The Manufacturer's program shall be in accordance with the requirements of Article AA-8000 and ASME NQA-1, except for those materials covered by RA-3120(b), RA-3140, RA-3151, RA-3152(b), RA-3153, RA-3154, RA-3160(c), and RA-3160(d). For RA-3120(b), RA-3140, RA-3151, RA-3152(b), RA-3153, RA-3154, RA-3160(c), and RA-3160(d), the requirements of RA-8110 shall apply.

Where component material traceability is not obtainable per RA-3110(c), the refrigeration equipment Manufacturer shall take the following actions.

(a) Designate and document which parts of the refrigeration equipment are nuclear safety related and which parts are nonnuclear safety related. This designated and documented listing shall be furnished at the initial (proposal) stage of procurement for the Engineer's review.

(b) For nonnuclear safety-related parts, no further action on the part of the Manufacturer is required, and the provisions of Article AA-8000 are not applicable.

(c) For nuclear safety-related parts, the Manufacturer shall prepare a procurement specification, drawing(s), or purchased material or part specification; maintain an inspection program to assure that the parts agree with the requirements of the procurement specification, drawing(s), or purchased part specification; segregate these parts; and test these parts in accordance with the applicable articles of this section.

Copyright ASME International
Provided by IHS under license with ASME
No reproduction or networking permitted without license from IHS
Not for Resale

ARTICLE RA-9000
NAMEPLATES, STAMPING, AND RECORDS

RA-9100 GENERAL REQUIREMENTS

(a) Portions of refrigeration equipment manufactured under the rules of ASME Boiler and Pressure Vessel Code, Section III or Section VIII, shall be stamped in accordance with the applicable rules of those sections.

(b) Authorization to use the symbol stamp for those portions of the equipment covered by the rules of Section III and Section VIII must be obtained from the Society. The method for obtaining such authorization is covered in those sections.

RA-9200 NAMEPLATES AND STAMPING

The requirements given in AA-9100 shall apply for nameplates, in addition to the following requirements:

(a) components of the refrigeration machine built in accordance with sections of the ASME Boiler and Pressure Vessel Code shall be marked in accordance with the rules of those sections;

(b) a nameplate shall be applied to each refrigeration machine and shall be marked as required by AA-9120 and as follows:

(1) the Owner's name and the name of the Owner's facility

(2) the year of manufacture

(c) the information required by RA-9200 shall be applied to a separate, corrosion-resistant nameplate permanently attached to the machine by suitable means. The method of attachment shall not affect the structural or operational integrity of the machine.

RA-9300 DATA REPORTS

(a) For ASME Boiler and Pressure Vessel Code stamped components, the applicable Code Data Reports (N-1, U-1, etc.) shall be completed, signed, and dated by the manufacturer's representative and the authorized inspector.

(b) For non-ASME Code components, the Data Report Form RA-1 shall be completed and signed by the manufacturer's representative and his inspector.

(c) The completed data report form shall be the inspector's authority to ship the machine.

Copyright ASME International
Provided by IHS under license with ASME
No reproduction or networking permitted without license from IHS
Not for Resale

FORM RA-1 MANUFACTURER'S DATA REPORT FOR SECTION RA NON-ASME NUCLEAR VESSELS[1] (CUSTOMARY)

1. Manufactured by _____
(Name and address of Manufacturer)

2. Manufactured for _____
(Name and address of Purchaser)

3. Type _____ Kind _____ Vessel No. _____ Year built _____
(Horiz. or vert.) (Tank, jacketed, heat ex.) (Mfrs. serial no.)

Items 4–7 inclusive to be completed for single-wall vessels, jackets of jacketed vessels, or shells of heat exchangers.

4. Shell: Material _____ TS _____ Nom. thkns. ____ Corr. in. allow. ____ in. Diam. ____ ft ____ in. Length ____ ft ____ in.
(Kind and spec. no.) (Min. of range specified)

5. Seams: Long _____ HT[2] _____ Girth _____ HT[2] _____ No. of courses _____

6. Heads: (a) Material _____ TS _____ (b) Material _____ TS _____

Location (Top, bottom, ends)	Thickness	Crown Radius	Knuckle Radius	Elliptical Ratio	Conical Apex Angle	Hemispherical Radius	Flat Diameter	Side to Pressure (Convex or Concave)
(a)								
(b)								

If removable, bolts used _____ Other fastening _____
(Material, spec. no., TS, size, number) (Describe or attach sketch)

Charpy impact _____ ft-lb at temp. of _____ °F Drop weight _____

7. Design Pressure[3] _____ psi at _____ °F Pneumatic, hydrostatic, or combination test pressure _____ psi

Items 8 and 9 to be completed for tube sections.

8. Tubesheets: Material _____ Diam. _____ in. Thickness _____ in. Attachment _____
(Kind and spec. no.) (Subject to pressure) (Welded, bolted)

9. Tubes: Material _____ O.D. _____ in. Thkns. _____ in. or Gage _____ No. _____ Type _____
(Kind and spec. no.) (Straight or U)

Items 10–13 inclusive to be completed for channels of heat exchangers.

10. Shell: Material _____ TS _____ Nom. thkns. ____ Corr. in. allow. ____ in. Diam. ____ ft ____ in. Length ____ ft ____ in.
(Kind and spec. no.) (Min. of range specified)

11. Seams: Long _____ HT[2] _____ Girth _____ HT[2] _____ No. of courses _____
(Welded, dbl., single) (Yes or no)

12. Heads: (a) Material _____ TS ____ (b) Material _____ TS ____ (c) Material _____ TS ____

Location	Thickness	Crown Radius	Knuckle Radius	Elliptical Ratio	Conical Apex Angle	Hemispherical Radius	Flat Diameter	Side to Pressure (Convex or Concave)
(a) Top, bottom, ends								
(b) Channel								

If removable, bolts used (a) _____ (b) _____ Other fastening _____
(Material, spec. no., TS, size, number) (Describe or attach sketch)

Charpy impact _____ ft-lb at temp. of _____ °F Drop weight _____

13. Design Pressure[3] _____ psi at _____ °F Pneumatic, hydrostatic, or combination test pressure _____ psi

Copyright ASME International
Provided by IHS under license with ASME
No reproduction or networking permitted without license from IHS
Not for Resale

FORM RA-1 MANUFACTURER'S DATA REPORT FOR SECTION RA NON-ASME NUCLEAR VESSELS[1] (CUSTOMARY) (CONT'D)

Items below to be completed for all vessels where applicable.

14. Safety valve outlets: Number _____ Size _____ Location _____

15. Nozzles:

Purpose (inlet, outlet, drain)	Number	Diam. or Size	Type	Material	Thickness	Reinforcement Material	How Attached

16. Inspection manholes: No. _____ Size _____ Location _____
Openings: Handholes No. _____ Size _____ Location _____
Threaded No. _____ Size _____ Location _____

17. Supports: Skirt _____ (Yes or no) Lugs _____ (Number) Legs _____ (Number) Other _____ (Describe) Attached _____ (Where and how)

18. Remarks: _____

(Brief description of service for which vessel was designed)

CERTIFICATION OF DESIGN

We certify that the statements made in this report are correct and that this nuclear vessel conforms to the rules of Section RA of ANSI/ASME AG-1.

Date _____ Signed _____ (Manufacturer) By _____

CERTIFICATION OF SHOP INSPECTION

Vessel made by _____ at _____

I, the undersigned, _____ employed by _____ of _____ have inspected the pressure vessel described in this Manufacturer's data report and state that to the best of my knowledge and belief the Manufacturer has constructed this pressure vessel in accordance with the certified drawings.

Date _____ Signed _____ (Inspector's signature)

GENERAL NOTE: List all other supporting forms and note that Manufacturer has reviewed and signed them.

NOTES:
(1) Supplemental sheets in form of lists, sketches, or drawings may be used, provided:
  (a) size is 8½ in. x 11 in.;
  (b) information on Items 1–3 on this data report is included on each sheet; and
  (c) each sheet is numbered, and number of sheets is recorded in Item 18, Remarks.
(2) If postweld heat treated.
(3) List other internal or external pressures with coincident temperature when applicable.

Copyright ASME International
Provided by IHS under license with ASME
No reproduction or networking permitted without license from IHS
Not for Resale

FORM RA-M1 MANUFACTURER'S DATA REPORT FOR SECTION RA NON-ASME NUCLEAR VESSELS[1] (SI)

1. Manufactured by _____
(Name and address of Manufacturer)

2. Manufactured for _____
(Name and address of Purchaser)

3. Type _____ (Horiz. or vert.) Kind _____ (Tank, heat ex.) Vessel No. _____ (Mfrs. serial no.) Year built _____

Items 4–7 inclusive to be completed for single-wall vessels or shells of heat exchangers.

4. Shell: Material _____ (Kind and spec. no.) TS _____ Pa (Min. of range specified) Nom. thkns. _____ cm

5. Seams: Long _____ HT[2] _____ Girth _____ HT[2] _____ No. of courses _____

6. Heads: (a) Material _____ TS _____ Pa (b) Material _____ TS _____ Pa

Location (Top, bottom, ends)	Thickness	Crown Radius	Knuckle Radius	Elliptical Ratio	Conical Apex Angle	Hemispherical Radius	Flat Diameter	Side to Pressure (Convex or Concave)
(a)								
(b)								

If removable, bolts used _____ (Material, spec. no., TS, size, number) Other fastening _____ (Describe or attach sketch)

Charpy impact _____ N at temp. of _____ °C Drop weight _____

7. Design Pressure[3] _____ Pa at _____ °C Pneumatic, hydrostatic, or combination test pressure _____ Pa

Items 8 and 9 to be completed for tube sections.

8. Tubesheets: Material _____ (Kind and spec. no.) Diam. _____ (Subject to pressure) cm Thickness _____ cm Attachment _____ (Welded, bolted)

9. Tubes: Material _____ (Kind and spec. no.) O.D. _____ cm Thkns. _____ cm or Gage _____ No. _____ Type _____ (Straight or U)

Items 10–13 inclusive to be completed for channels of heat exchangers.

10. Shell: Material _____ (Kind and spec. no.) TS _____ (Min. of range specified) Pa Nom. thkns. _____ Corr. in. allow. _____ cm Diam. _____ m Length _____ m

11. Seams: Long _____ (Welded, dbl., single) HT[2] _____ (Yes or no) Girth _____ HT[2] _____ No. of courses _____

12. Heads: (a) Material _____ TS _____ Pa (b) Material _____ TS _____ Pa

Location	Thickness	Crown Radius	Knuckle Radius	Elliptical Ratio	Conical Apex Angle	Hemispherical Radius	Flat Diameter	Side to Pressure (Convex or Concave)
(a) Top, bottom, ends								
(b) Channel								

If removable, bolts used (a) _____ (b) _____ (Material, spec. no., TS, size, number) Other fastening _____ (Describe or attach sketch)

Charpy impact _____ N at temp. of _____ °C Drop weight _____

13. Design Pressure[3] _____ Pa at _____ °C Pneumatic, hydrostatic, or combination test pressure _____ Pa

Copyright ASME International
Provided by IHS under license with ASME
No reproduction or networking permitted without license from IHS
Not for Resale

FORM RA-M1 MANUFACTURER'S DATA REPORT FOR SECTION RA NON-ASME NUCLEAR VESSELS[1] (SI) (CONT'D)

Items below to be completed for all vessels where applicable.

14. Safety valve outlets: Number _____ Size _____ Location _____

15. Nozzles:

Purpose (inlet, outlet, drain)	Number	Diam. or Size	Type	Material	Thickness	Reinforcement Material	How Attached

16. Inspection manholes: No. _____ Size _____ Location _____
Openings: Handholes No. _____ Size _____ Location _____
Threaded No. _____ Size _____ Location _____

17. Supports: Skirt _____ (Yes or no) Lugs _____ (Number) Legs _____ (Number) Other _____ (Describe) Attached _____ (Where and how)

18. Remarks: _____

(Brief description of service for which vessel was designed)

CERTIFICATION OF DESIGN

We certify that the statements made in this report are correct and that this nuclear vessel conforms to the rules of Section RA of ANSI/ASME AG-1.

Date _____ Signed _____ (Manufacturer) By _____

CERTIFICATION OF SHOP INSPECTION

Vessel made by _____ at _____

I, the undersigned, _____ employed by _____ of _____ have inspected the pressure vessel described in this Manufacturer's data report and state that to the best of my knowledge and belief the Manufacturer has constructed this pressure vessel in accordance with the certified drawings.

Date _____ Signed _____ (Inspector's signature)

GENERAL NOTE: List all other supporting forms and note that Manufacturer has reviewed and signed them.

NOTES:
(1) Supplemental sheets in form of lists, sketches, or drawings may be used, provided:
  (a) size is 21.6 cm x 28 cm;
  (b) information on Items 1–3 on this data report is included on each sheet; and
  (c) each sheet is numbered, and number of sheets is recorded in Item 18, Remarks.
(2) If postweld heat treated.
(3) List other internal or external pressures with coincident temperature when applicable.

Copyright ASME International
Provided by IHS under license with ASME
No reproduction or networking permitted without license from IHS
Not for Resale

FORM RA-2 CENTRIFUGAL COMPRESSOR TEST RECORD

Manufacturer _____

Serial No. _____

Model No. _____

Mechanical Run-in

Test duration	_____	min
Speed	_____	rpm
Oil pressure, bearing supply	_____	psig (Pa)
Bearing oil supply temperature	_____	°F (°C)
Bearing oil outlet temperature	_____	°F (°C)
Compressor suction temperature	_____	°F (°C)
Compressor discharge temperature	_____	°F (°C)
Compressor suction pressure	_____	psig (Pa)
Compressor discharge pressure	_____	psig (Pa)
Test fluid	_____	

Vibration _____

_____

_____

Manufacturer's test technician _____

Date _____

Manufacturer's Q.A. inspector _____

Date _____

Owner's representative (1) _____

Date _____

NOTE:

(1) Optional. If witness test, prior written agreement must be in effect.

Copyright ASME International
Provided by IHS under license with ASME
No reproduction or networking permitted without license from IHS
Not for Resale

FORM RA-2a CENTRIFUGAL COMPRESSOR OIL PUMP PRESSURE TEST

Manufacturer _____

Serial No. _____

Model No. _____

Hydrostatic _____ or pneumatic _____ test (check which) _____ psig (Pa)

Test duration _____ min

Manufacturer's test technician _____

Date _____

Manufacturer's Q.A. inspector _____

Date _____

Owner's representative (1) _____

Date _____

NOTE:

(1) Optional. If witness test, prior written agreement must be in effect.

Copyright ASME International
Provided by IHS under license with ASME
No reproduction or networking permitted without license from IHS
Not for Resale

FORM RA-2b CENTRIFUGAL COMPRESSOR PRESSURE TEST RECORD

Manufacturer _____

Serial No. _____

Model No. _____

Hydrostatic _____ or pneumatic _____ test (check which)

Time _____ min

_____ psig (Pa)

Leak test

Time _____ min

Manufacturer's test technician _____

Date _____

Manufacturer's Q.A. inspector _____

Date _____

Owner's representative (1) _____

Date _____

NOTE:

(1) Optional. If witness test, prior written agreement must be in effect.

Copyright ASME International
Provided by IHS under license with ASME
No reproduction or networking permitted without license from IHS
Not for Resale

FORM RA-3 RECIPROCATING SCROLL/SCREW COMPRESSOR TEST RECORD

Manufacturer _____

Serial No. _____

Model No. _____

Mechanical Run-in

Test duration	_____ *min*
Speed	_____ rpm
Oil pressure	_____ psig (Pa)
(a) Lubrication	
(b) Unloader (if oil operated)	_____ psig (Pa)
Compressor suction pressure	_____ psig (Pa)
Compressor discharge pressure	_____ psig (Pa)
Test fluid	_____

Manufacturer's test technician _____

Date _____

Manufacturer's Q.A. inspector _____

Date _____

Owner's representative (1) _____

Date _____

NOTE:

(1) Optional. If witness test, prior written agreement must be in effect.

Copyright ASME International
Provided by IHS under license with ASME
No reproduction or networking permitted without license from IHS
Not for Resale

FORM RA-3a RECIPROCATING SCROLL/SCREW COMPRESSOR PRESSURE TEST RECORD

Manufacturer _____

Serial No. _____

Model No. _____

Pressure test

(a) High side _____ psig (Pa)

(b) Low side _____ psig (Pa)

Leak test

(a) High side _____ psig (Pa)

(b) Low side _____ psig (Pa)

Manufacturer's test technician _____

Date _____

Manufacturer's Q.A. inspector _____

Date _____

Owner's representative (1) _____

Date _____

NOTE:

(1) Optional. If witness test, prior written agreement must be in effect.

Copyright ASME International
Provided by IHS under license with ASME
No reproduction or networking permitted without license from IHS
Not for Resale

FORM RA-4 ELECTRICAL TEST RECORD – CONTROLS AND CONTROL PANELS

Manufacturer _____

Serial No. _____

Model No. _____

Controls/control panels functional test, continuity, and megger tests:

Tests acceptable _____ Yes _____ No

If test is not acceptable, state reasons, retest, and redocument.

_____

_____

_____

_____

Manufacturer's test technician _____

Date _____

Manufacturer's Q.A. inspector _____

Date _____

Owner's representative (1) _____

Date _____

NOTE:

(1) Optional. If witness test, prior written agreement must be in effect.

Copyright ASME International
Provided by IHS under license with ASME
No reproduction or networking permitted without license from IHS
Not for Resale

FORM RA-5 PERFORMANCE TEST RECORD (CUSTOMARY)
(See Mandatory Appendix RA-I)

Manufacturer _____

Serial No. _____

Model No. _____

Chilled Water Refrigeration Equipment	Minimum Design Load [Note (1)]	Intermediate Load Point 1 [Note (2)]	Intermediate Load Point 2 [Note (2)]	Full Load [Note (1)]
1. Net cooling capacity (Btu/hr) (tons)				
2. Specified evaporator fouling factor (hr-ft^2-°F/Btu)				
3. Specified condenser fouling factor (hr-ft^2-°F/Btu)				
4. Chilled water flow (gal/min)				
5. Entering chilled water temperature (°F)				
6. Leaving chilled water temperature (°F)				
7. Condenser water flow (gal/min)				
8. Entering condenser water temperature (°F)				
9. Leaving condenser water temperature (°F)				
10. Condensing temperature (°F)				
11. Subcooled liquid temperature (°F)				
12. Suction temperature (°F)				
13. Power input to compressor motor (kW)				
14. Adjusted condensing temperature increase (°F)				
15. Approximate condenser water temperature to maintain condensing temperature Entering (°F) Leaving (°F)				
16. Adjusted suction temperature decrease (°F)				
17. Approximated chilled water temperature to maintain adjusted suction temperature Entering (°F) Leaving (°F)				
18. $q(e_v)$: net cooling capacity of liquid cooler (Btu/hr)				
19. q(kW input): electrical energy input to compressor (kW)				
20. $q(c)$: net heat rejected by condenser (Btu/hr)				

Copyright ASME International
Provided by IHS under license with ASME
No reproduction or networking permitted without license from IHS
Not for Resale

FORM RA-5 PERFORMANCE TEST RECORD (CUSTOMARY) (CONT'D)
(See Mandatory Appendix RA-I)

Chilled Water Refrigeration Equipment	Minimum Design Load [Note (1)]	Intermediate Load Point 1 [Note (2)]	Intermediate Load Point 2 [Note (2)]	Full Load [Note (1)]
21. Measured heat balance (within 5%) _____				
22. T_e — temperature of water entering unit (°F)				
23. T_d — temperature of water leaving unit (°F)				
24. Tons _____				
25. Power input (kW) _____ (within 5% of Mfrs. proposed input)				

Manufacturer's test technician _____

Date _____

Q.A. inspector _____

Date _____

Owner's representative (3) _____

Date _____

GENERAL NOTE: All calculations for these values must be included with this test record.

NOTES:
(1) Mandatory test point.
(2) Optional test point. If desired, must be so specified by the Engineer in the design specification.
(3) Optional. If witness test, prior written agreement must be in effect.

Copyright ASME International
Provided by IHS under license with ASME
No reproduction or networking permitted without license from IHS
Not for Resale

FORM RA-M5 PERFORMANCE TEST RECORD (SI)
(See Mandatory Appendix RA-MI)

Manufacturer _____

Serial No. _____

Model No. _____

Chilled Water Refrigeration Equipment	Minimum Design Load [Note (1)]	Intermediate Load Point 1 [Note (2)]	Intermediate Load Point 2 [Note (2)]	Full Load [Note (1)]
1. Net cooling capacity (kW) (tons)				
2. Specified evaporator fouling factor (m^2 – °kW)				
3. Specified condenser fouling factor (m^2 – °kW)				
4. Chilled water flow (L/min)				
5. Entering chilled water temperature (°C)				
6. Leaving chilled water temperature (°C)				
7. Condenser water flow (L/min)				
8. Entering condenser water temperature (°C)				
9. Leaving condenser water temperature (°C)				
10. Condensing temperature (°C)				
11. Subcooled liquid temperature (°C)				
12. Suction temperature (°C)				
13. Power input to compressor motor (kW)				
14. Adjusted condensing temperature increase (°C)				
15. Approximate condenser water temperature to maintain condensing temperature				
Entering (°C)				
Leaving (°C)				
16. Adjusted suction temperature decrease (°C)				
17. Approximated chilled water temperature to maintain adjusted suction temperature				
Entering (°C)				
Leaving (°C)				
18. $q(e_v)$: net cooling capacity of liquid cooler (Btu/hr)				
19. q(kW input): electrical energy input to compressor (kW)				
20. $q(c)$: net heat rejected by condenser (kW)				

Copyright ASME International
Provided by IHS under license with ASME
No reproduction or networking permitted without license from IHS
Not for Resale

FORM RA-M5 PERFORMANCE TEST RECORD (SI) (CONT'D)
(See Mandatory Appendix RA-I)

Chilled Water Refrigeration Equipment	Minimum Design Load [Note (1)]	Intermediate Load Point 1 [Note (2)]	Intermediate Load Point 2 [Note (2)]	Full Load [Note (1)]
21. Measured heat balance (within 5%) _____				
22. T_e — temperature of water entering unit (°C)				
23. T_d — temperature of water leaving unit (°C)				
24. Tons _____				
25. Power input (kW) _____ (within 5% of Mfrs. proposed input)				

Manufacturer's test technician _____

Date _____

Manufacturer's Q.A. inspector _____

Date _____

Owner's representative (3) _____

Date _____

GENERAL NOTE: All calculations for these values must be included with this test record.

NOTES:
(1) Mandatory test point.
(2) Optional test point. If desired, must be so specified by the Engineer in the design specification.
(3) Optional. If witness test, prior written agreement must be in effect.

Copyright ASME International
Provided by IHS under license with ASME
No reproduction or networking permitted without license from IHS
Not for Resale

MANDATORY APPENDIX RA-I

PERFORMANCE TESTING OF CHILLED WATER REFRIGERATION UNIT (CUSTOMARY)

ARTICLE RA-I-1000 GENERAL (03)

The performance of the chilled water refrigeration equipment shall be certified by conducting a factory performance test as required by RA-5222. The performance test shall be conducted in accordance with ARI 550/590, Appendix A, with modifications to its paragraphs as outlined in RA-I-1100 through RA-I-1700.

RA-I-1100 PARAGRAPH A4.1.1

The conditions to be used in this test shall be as shown in Table RA-I-1100.

RA-I-1200 EFFECT OF FOULING FACTORS

The fouling factors to be used for the evaporator and condenser shall be as given in the design specification. The method used for determining the adjusted suction and condensing temperatures at these fouling factors shall be the analytical method as described in ARI 450 and 480, using the Manufacturer's certified data. The adjusted condensing temperature increase and suction temperature decrease shall be calculated at the time of the test based on the actual cleaned tube condensing and suction temperatures (determined from averaging the three tests in accordance with paragraph 5.4.1 of ARI 450 and 480) and tabulated on Form RA-5 as shown in Table RA-I-1200.

RA-I-1300 PARAGRAPH A7.3.1

The general heat balance equation shall be as follows:

$$q(e_v) + q(\text{kW input}) = q(c)$$

and shall be tabulated on Form RA-5. See also Table RA-I-1300.

RA-I-1400 PARAGRAPH A7.3.3

The measured heat balance for the tests shall be within 5% of that specified for the full load condition and within 7½% of the other test points.

RA-I-1500 PARAGRAPH A8.1.1

The capacity in tons shall be obtained by the following:

$$\text{tons} = (W)(t_e - t_d)/12{,}000$$

where

W = weight flow rate of chilled water (lb/hr)
= (gal/min) (62.4 lb/ft^3) (60 min/hr)/(7.48 gal/ft^3) where the specific heat of water is 1 Btu/lb–°F

t_e = temperature of water entering unit, °F

t_d = temperature of water leaving unit, °F

Copyright ASME International
Provided by IHS under license with ASME
No reproduction or networking permitted without license from IHS
Not for Resale

and shall be tabulated on Form RA-5 according to Table RA-I-1500.

RA-I-1600 POWER INPUT

The power input expressed in kW/ton of refrigeration shall be within 5% of the Manufacturer's proposed power input for the full load test.

RA-I-1700 REFRIGERATION MACHINES EQUIPPED WITH SUBCOOLERS

Subcooler performance will be adversely affected when the condensing water temperature is increased to simulate fouling. To compensate, it is acceptable to add 0.1% to the kW/ton of refrigeration tolerance of 5% for each Fahrenheit degree of adjustment made to the entering condenser water temperature.

Copyright ASME International
Provided by IHS under license with ASME
No reproduction or networking permitted without license from IHS
Not for Resale

TABLE RA-I-1100

	Minimum Design Load [Note (1)]	Intermediate Load Point 1 [Note (2)]	Intermediate Load Point 2 [Note (2)]	Full Load [Note (1)]
Net cooling capacity (Btu/hr)	Note (3)	Note (3)	Note (3)	Note (3)
Specified evaporator fouling factor (hr-ft-°F/Btu)	Note (3)	Note (3)	Note (3)	Note (3)
Specified condenser fouling factor (hr-ft-°F/Btu)	Note (3)	Note (3)	Note (3)	Note (3)
Chilled water flow (gal/min)	Note (3)	Note (3)	Note (3)	Note (3)
Entering chilled water temperature (°F)	Note (3)	Note (3)	Note (3)	Note (3)
Leaving chilled water temperature (°F)	Note (3)	Note (3)	Note (3)	Note (3)
Condenser water flow (gal/min)	Note (3)	Note (3)	Note (3)	Note (3)
Entering condenser water temperature (°F)	Note (3)	Note (3)	Note (3)	Note (3)
Leaving condenser water temperature (°F)	Note (3)	Note (3)	Note (3)	Note (3)
Power input to compressor motor (kW)	NA	NA	NA	Note (3)

GENERAL NOTE: NA = not applicable

NOTES:
(1) Mandatory test point.
(2) Optional test point. If desired, must be so specified by the engineer in the design specification.
(3) Refer to the design specification for these factors.

TABLE RA-I-1200

	Minimum Design Load [Note (1)]	Intermediate Load Point 1 [Note (2)]	Intermediate Load Point 2 [Note (2)]	Full Load [Note (1)]
Adjusted condensing temperature increase (°F)	Note (3)	Note (3)	Note (3)	Note (3)
Approximate condenser water temperature to maintain the adjusted condensing temperature	Note (3)	Note (3)	Note (3)	Note (3)
Adjusted suction temperature decrease (°F)	Note (3)	Note (3)	Note (3)	Note (3)
Entering	Note (3)	Note (3)	Note (3)	Note (3)
Leaving	Note (3)	Note (3)	Note (3)	Note (3)
Approximate chilled water temperature to maintain adjusted suction temperature (°F)				
Entering	Note (3)	Note (3)	Note (3)	Note (3)
Leaving	Note (3)	Note (3)	Note (3)	Note (3)

NOTES:
(1) Mandatory test point.
(2) Optional test point. If desired, must be so specified by the engineer in the design specification.
(3) To be calculated at the time of test.

Copyright ASME International
Provided by IHS under license with ASME
No reproduction or networking permitted without license from IHS
Not for Resale

TABLE RA-I-1300

	Minimum Design Load	Intermediate Load Point 1	Intermediate Load Point 2	Full Load
$q(e_v)$ — net cooling capacity of liquid cooler (Btu/hr) after correction for fouling	Note (1)	Note (1)	Note (1)	Note (1)
q(kW input) — electrical energy input to compressor (kW) (Btu/hr equivalent)	Note (1)	Note (1)	Note (1)	Note (1)
$q(c)$ — net heat rejected by condenser (Btu/hr)	Note (1)	Note (1)	Note (1)	Note (1)

NOTE:
(1) To be measured by test.

TABLE RA-I-1500

	Minimum Design Load [Note (1)]	Intermediate Load Point 1 [Note (2)]	Intermediate Load Point 2 [Note (2)]	Full Load [Note (1)]
t_e — temperature of water entering unit after correction for fouling (°C)	Note (3)	Note (3)	Note (3)	Note (3)
t_d — temperature of water leaving unit after correction for fouling (°C)	Note (3)	Note (3)	Note (3)	Note (3)

NOTES:
(1) Mandatory test point.
(2) Optional test point. If desired, must be so specified by the engineer in the design specification.
(3) To be calculated at the time of test.

Copyright ASME International
Provided by IHS under license with ASME
No reproduction or networking permitted without license from IHS
Not for Resale

MANDATORY APPENDIX RA-MI
PERFORMANCE TESTING OF CHILLED WATER REFRIGERATION UNIT (SI)

ARTICLE RA-MI-1000 GENERAL (03)

The performance of the chilled water refrigeration equipment shall be certified by conducting a factory performance test as required by RA-5222. The performance test shall be conducted in accordance with ARI 550/590, Appendix A, with modifications to its paragraphs as outlined in RA-MI-1100 through RA-MI-1700.

RA-MI-1100 PARAGRAPH A4.1.1

The conditions to be used in this test shall be as shown in Table RA-MI-1100.

RA-MI-1200 EFFECT OF FOULING FACTOR

The fouling factors to be used for the evaporator and condenser shall be as given in the design specification. The method used for determining the adjusted suction and condensing temperatures at these fouling factors shall be the analytical method as described in ARI 450 and 480, using the Manufacturer's certified data. The adjusted condensing temperature increase and suction temperature decrease shall be calculated at the time of the test based on the actual cleaned tube condensing and suction temperatures (determined from averaging the three tests in accordance with paragraph 5.4.1 of ARI 450 and 480) and tabulated on Form RA-M5 as shown in Table RA-MI-1200.

RA-MI-1300 PARAGRAPH A7.3.1

The general heat balance equation shall be as follows:

$$q(e_v) + q(\text{kW input}) = q(c)$$

and shall be tabulated on Form RA-M5. See also Table RA-MI-1300.

RA-MI-1400 PARAGRAPH A7.3.3

The measured heat balance for the tests shall be within 5% of that specified for the full load condition and within 7½% of the other test points.

RA-MI-1500 PARAGRAPH A8.1.1

The capacity in kW shall be obtained by the following:

$$\text{kW} = (W)(t_e - t_d)/859{,}845$$

where

W = weight flow rate of chilled water (g/hr)
= (L/min) (g/cm^3) (60 min/h)/(L/1000 cm^3)
where the specific heat of water is 1 Cal/gm–°C
t_e = temperature of water entering unit (°C)
t_d = temperature of water leaving unit (°C)

Copyright ASME International
Provided by IHS under license with ASME
No reproduction or networking permitted without license from IHS
Not for Resale

and shall be tabulated on Form RA-M5 according to Table RA-MI-1500.

RA-MI-1600 POWER INPUT

The power input expressed in kW/kW of refrigeration shall be within 5% of the Manufacturer's proposed power input for the full load test.

RA-MI-1700 REFRIGERATION MACHINES EQUIPPED WITH SUBCOOLERS

Subcooler performance will be adversely affected when the condensing water temperature is increased to simulate fouling. To compensate, it is acceptable to add 0.1% to the kW/kW of refrigeration tolerance of 5% for each degree Celsius of adjustment made to the entering condenser water temperature.

Copyright ASME International
Provided by IHS under license with ASME
No reproduction or networking permitted without license from IHS
Not for Resale

TABLE RA-MI-1100
ALLOWABLE MATERIALS

	Minimum Design Load [Note (1)]	Intermediate Load Point 1 [Note (2)]	Intermediate Load Point 2 [Note (2)]	Full Load [Note (1)]
Net cooling capacity, kW (tons)	Note (3)	Note (3)	Note (3)	Note (3)
Specified evaporator fouling factor (m^2 – °k/W)	Note (3)	Note (3)	Note (3)	Note (3)
Specified Condenser fouling factor (m^2 – °k/W)	Note (3)	Note (3)	Note (3)	Note (3)
Chilled water flow (L/min)	Note (3)	Note (3)	Note (3)	Note (3)
Entering chilled water temperature (°C)	Note (3)	Note (3)	Note (3)	Note (3)
Leaving chilled temperature (°C)	Note (3)	Note (3)	Note (3)	Note (3)
Condenser water flow (L/min)	Note (3)	Note (3)	Note (3)	Note (3)
Entering condenser water temperature (°C)	Note (3)	Note (3)	Note (3)	Note (3)
Leaving condenser water temperature (°C)	Note (3)	Note (3)	Note (3)	Note (3)
Power input to compressor motor, kW	NA	NA	NA	Note (3)

GENERAL NOTE: NA = not applicable

NOTES:
(1) Mandatory test point.
(2) Optional test point. If desired, must be so specified by the engineer in the design specification.
(3) Refer to the design specification for these factors.

TABLE RA-MI-1200
ALLOWABLE MATERIALS

	Minimum Design Load [Note (1)]	Intermediate Load Point 1 [Note (2)]	Intermediate Load Point 2 [Note (2)]	Full Load [Note (1)]
Adjusted condensing temperature increase (°C)	Note (3)	Note (3)	Note (3)	Note (3)
Approximate condenser water temperature to maintain the adjusted condensing temperature	Note (3)	Note (3)	Note (3)	Note (3)
Adjusted suction temperature decrease (°C)	Note (3)	Note (3)	Note (3)	Note (3)
Entering	Note (3)	Note (3)	Note (3)	Note (3)
Leaving	Note (3)	Note (3)	Note (3)	Note (3)
Approximate chilled water temperature to maintain adjusted suction temperature (°C)				
Entering	Note (3)	Note (3)	Note (3)	Note (3)
Leaving	Note (3)	Note (3)	Note (3)	Note (3)

NOTES:
(1) Mandatory test point.
(2) Optional test point. If desired, must be so specified by the engineer in the design specification.
(3) To be calculated at the time of test.

Copyright ASME International
Provided by IHS under license with ASME
No reproduction or networking permitted without license from IHS
Not for Resale

TABLE RA-MI-1300

	Minimum Design Load	Intermediate Load Point 1	Intermediate Load Point 2	Full Load
$q(e_v)$ — net cooling capacity of liquid cooler (kW) after correction for fouling	Note (1)	Note (1)	Note (1)	Note (1)
q(kW input) — electrical energy input to compressor (kW) (Btu/hr equivalent)	Note (1)	Note (1)	Note (1)	Note (1)
$q(c)$ — net heat rejected by condenser (kW)	Note (1)	Note (1)	Note (1)	Note (1)

NOTE:
(1) To be measured by test.

TABLE RA-MI-1500

	Minimum Design Load [Note (1)]	Intermediate Load Point 1 [Note (2)]	Intermediate Load Point 2 [Note (2)]	Full Load [Note (1)]
t_e — temperature of water entering unit after correction for fouling (°C)	Note (3)	Note (3)	Note (3)	Note (3)
t_d — temperature of water leaving unit after correction for fouling (°C)	Note (3)	Note (3)	Note (3)	Note (3)

NOTES:
(1) Mandatory test point.
(2) Optional test point. If desired, must be so specified by the engineer in the design specification.
(3) To be calculated at the time of test.

Copyright ASME International
Provided by IHS under license with ASME
No reproduction or networking permitted without license from IHS
Not for Resale

MANDATORY APPENDIX RA-II

MANDATORY LIST OF INSTRUMENTATION FUNCTIONS AND CONTROL FUNCTIONS

TABLE RA-II-1000
MANDATORY LIST OF INSTRUMENTATION FUNCTIONS AND CONTROL FUNCTIONS

Control Functions	Manufacturers Panel	Remote Panel
1. On, stop	Push button	Provisions for push button
2. Start	Push button	Provisions for push button
3. Ready	Pilot light or digital display	Provisions for pilot light or digital display
4. Oil pump on (if applicable)	Pilot light or digital display	Note (1)
5. Power on	Pilot light or digital display	Note (1)
6. Compressor high burning oil temperature (if applicable)	Pilot light or digital display	Note (1)
7. Compressor high motor temperature	Pilot light or digital display	Note (1)
8. Evaporator low refrigerant pressure	Pilot light or digital display	Note (1)
9. Condenser high refrigerant pressure	Pilot light or digital display	Note (1)
10. Evaporator low water flow	Pilot light or digital display	Note (1)
11. Compressor low oil pressure (if applicable)	Pilot light or digital display	Note (1)
12. Evaporator low chilled water (recycle)	Pilot light or digital display	Note (1)
13. Oil heater on (if applicable)	Pilot light or digital display	Note (1)
14. Evaporator pressure	Gage or digital display	
15. Condenser refrigerant pressure	Gage or digital display	
16. Compressor oil pressure high (if applicable)	Gage or digital display	
17. Compressor oil pressure low (if applicable)	Gage or digital display	Note (1)
18. High condenser water temperature	Pilot light or digital display	Note (1)
19. High chilled water temperature	Pilot light or digital display	Note (1)
20. Purge system on (if applicable)	Pilot light or digital display	Note (1)

NOTE:
(1) Provisions for transmitting signal, remote equipment trouble alarm.

Copyright ASME International
Provided by IHS under license with ASME
No reproduction or networking permitted without license from IHS
Not for Resale

NONMANDATORY APPENDIX RA-A
DIVISION OF RESPONSIBILITY

This Nonmandatory Appendix is intended to identify the roles normally assumed by the organizations responsible for fulfilling Code requirements when not specifically addressed in an article or subarticle. These are guidelines to assist with Code compliance and are not to be construed as legal or contractual responsibilities unless so invoked by the Owner or designee.

TABLE RA-A-1000
DIVISION OF RESPONSIBILITY

RA-	Item	Responsibility
3100(a)	Properties and composition of materials	Engineer
	Prohibited or limited materials	Engineer
	Specific materials	Engineer
(b)	Effects of service conditions on properties of material	Engineer
4200	Purpose (design function)	Engineer
	Safety classification	Engineer
	External interface safety classification	Engineer
4200(a)	Performance under all nuclear power plant operating modes	Engineer
4200(b)(1)	Temperature	Engineer
(2)	Pressure	Engineer
(3)	Humidity	Engineer
(4)	Radiation levels	Engineer
(5)	Chemicals	Engineer
(6)	Structural design criteria	Engineer
(7)	Electrical transients	Engineer
(8)	Cooling load requirements	Engineer
(9)	Cooling load profile and time history	Engineer
(10)	Restart conditions	Engineer
(11)	Water-side design pressures for evaporator and condenser	Engineer
(12)	Environmental condition time histories for refrigeration equipment exposed to harsh environments	Engineer
4200(c)	Magnitude of the loads	Engineer
4300(a)	Design load, tons of refrigeration	Engineer
(b)	Entering and leaving evaporator fluid temperature	Engineer
(c)	Entering condenser fluid	Engineer
(d)	Evaporator and condenser flow rates	Engineer
(e)	Evaporator and condenser fouling factors	Engineer
(f)	Tube material and nominal wall thickness for evaporator and condenser	Engineer
(g)	Fluid to be cooled and condensing fluid	Engineer
(h)	Electrical characteristics	Engineer
(i)	Pressure drop for liquid	Engineer
(j)	Maximum tube velocities	Engineer

Copyright ASME International
Provided by IHS under license with ASME
No reproduction or networking permitted without license from IHS
Not for Resale

TABLE RA-A-1000
DIVISION OF RESPONSIBILITY (CONT'D)

RA-	Item	Responsibility
4411	Water-side pressure vessel components and respective fluid systems	Engineer
4412	Boundaries of water-side pressure vessels	Engineer
4620	Non-Class 1E vane and valve operators	Engineer
4630	NEMA enclosure designation, including control functions or provisions for functions, non-Class 1E components	Engineer
4630(b)	Equipment monitoring	Engineer
	Interface between machine electrical systems and external electrical systems	Engineer
4700(a)	Ensures equipment is accessible for repair	Manufacturer
(b)	Provides maintenance and access criteria	Manufacturer
	Performance ratings based on design conditions	Engineer
	All required testing to be delineated	Engineer
5213.1	Non-ASME pressure vessel testing	Engineer
5213.2	Code data from Form RA-1	Manufacturer
5214	Keeping a test log	Manufacturer
5221.1	Commercial routine test	Manufacturer
5221.2	Performance data from prototype	Manufacturer
5222	Active refrigeration machine components test	Manufacturer
5223	Electrical control components, assembled control panels, and systems testing	Manufacturer
5224	Valve and vane operator functional testing	Manufacturer
5313	Nondestructive pressure retaining components and component supports	Engineer
6100	Welding and brazing on non-ASME pressure retaining components	Manufacturer
6133.2	Qualifications consistent with ASME Code, Section IX, or ANSI/AWS D1.1	Manufacturer

Copyright ASME International
Provided by IHS under license with ASME
No reproduction or networking permitted without license from IHS
Not for Resale

TABLE RA-A-1000
DIVISION OF RESPONSIBILITY (CONT'D)

RA-	Item	Responsibility
6210	Cleanliness levels of fluid systems	Engineer
6220	Surface preparation, finishing, and coating (all components, equipment)	Engineer
	Specified standards, cleaning, finishing, and coating	Manufacturer
	Surface preparation, finish, and coatings compatible with environmental conditions provided by RA-4200(b)	Engineer
7200	Packaging	Manufacturer
7300	Shipping	Manufacturer
7400	Storage	Manufacturer
7500	Handling and rigging	Manufacturer
7600	Assembly, erection, and start-up procedures	Manufacturer
9100(b)	Authority to use stamp	Society
9300(a)	Data Report Form RA-1	Manufacturer/Inspector
9300(b) and Form RA-1	Completed data form, witness of stamping his own inspection report	Inspector/Manufacturer
Form RA-2	Centrifugal compressor test record	Inspector/Manufacturer
Form RA-2a	Centrifugal compressor oil pump pressure test record	Manufacturer
Form RA-2b	Centrifugal compressor pressure test record	Manufacturer
Form RA-3	Reciprocating scroll/screw compressor test record	Manufacturer
Form RA-3a	Reciprocating scroll/screw compressor test record	Manufacturer
Form RA-4	Electrical test record	Manufacturer
Form RA-5	Optional capacity test points, performance test record	Engineer/Manufacturer
Mandatory Appendix RA-I	Optional capacity test points	Engineer

Copyright ASME International
Provided by IHS under license with ASME
No reproduction or networking permitted without license from IHS
Not for Resale

NONMANDATORY APPENDIX RA-B
TYPICAL EXTERNAL INTERFACE DIAGRAMS

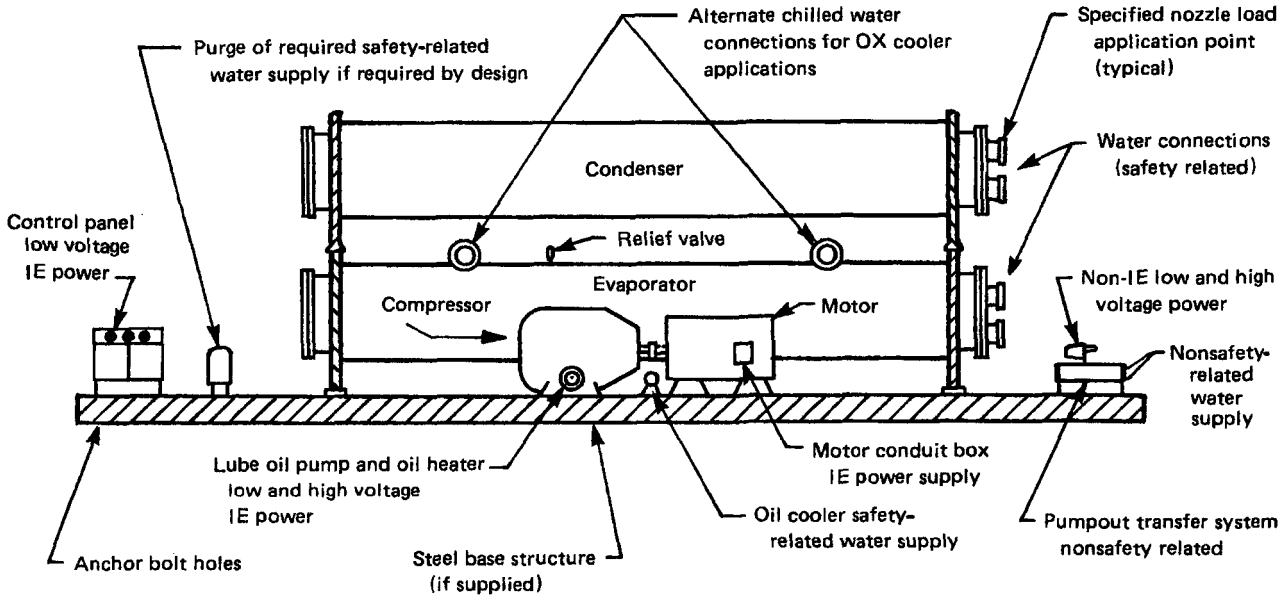

GENERAL NOTES:

(a) Shaded portions are NF boundaries.

(b) A power panel with oil pump starter may be utilized as a single connection point for IE circuits (except main motor) if specified.

(c) Open motor shown. Identical connections required when hermetic motor furnished.

(d) Main motor starter located remotely from refrigeration equipment. Starter to include magnetic over-current device, control relay, and current transformer and resistor for motor overload control.

(e) Location of equipment and boundaries is shown only for schematic purposes. Manufacturer shall provide exact boundaries and equipment locations to engineer.

FIG. RA-B-1000 INTERFACE POINTS — TYPICAL TWO-VESSEL DESIGN

Copyright ASME International
Provided by IHS under license with ASME
No reproduction or networking permitted without license from IHS
Not for Resale

SECTION CA
CONDITIONING EQUIPMENT

CA-1000	**Introduction**	280
CA-1100	Scope	280
CA-1200	Definitions and Terms	280
CA-2000	**Referenced Documents**	282
CA-3000	**Materials**	283
CA-3100	General Requirements	283
CA-3200	Water, Steam, and Volatile Refrigerant Coil Materials	283
CA-3300	Air Washer and Evaporative Cooler Materials	284
CA-3400	Electric Heating Coil Materials	284
CA-3500	Certification of Materials	284
CA-4000	**Design**	288
CA-4100	Design Conditions for Water and Steam Coils	288
CA-4200	Design Conditions for Volatile Refrigerant Coils	291
CA-4300	Design Conditions for Air Washers and Evaporative Coolers	292
CA-4400	Design Conditions for Electric Heating Coils	295
CA-5000	**Inspection and Testing**	298
CA-5100	General Requirements	298
CA-5200	Testing of Water, Steam, and Volatile Refrigerant Coils	298
CA-5300	Testing of Air Washers and Evaporative Coolers	299
CA-5400	Testing of Electric Heating Coils	299
CA-5500	Test Reports	300
CA-6000	**Fabrication and Installation**	301
CA-6100	General Requirements	301
CA-6200	Cleaning, Finishing, and Coating	301
CA-7000	**Packaging, Shipping, Storage, and Handling**	303
CA-7100	General Requirements	303
CA-7200	Packaging	303
CA-7300	Shipping	303
CA-7400	Storage	303
CA-7500	Handling	303
CA-8000	**Quality Assurance**	304
CA-8100	General Requirements	304

Copyright ASME International
Provided by IHS under license with ASME
No reproduction or networking permitted without license from IHS
Not for Resale

CA-9000 **Nameplates and Records** 306
CA-9100 General Requirements 306
CA-9200 Coils 306
CA-9300 Information on Nameplates 306
CA-9400 Nameplate Location 306
CA-9500 Data Reports 307

Tables
CA-3230 Allowable Materials — Nonpressure-Retaining Components for Water, Steam, and Volatile Refrigerant Coils 285
CA-3310 Allowable Materials — Air Washers and Evaporative Coolers 286
CA-3410 Allowable Materials — Electric Heating Coils 287
CA-4122 Maximum Water Velocities in Water Coils 289
CA-8120-1 Lifetime Quality Assurance Records 305
CA-8120-2 Nonpermanent Quality Assurance Records 305

Mandatory Appendices
CA-I Manufacturer's Data Reports 308
CA-II Factory Testing of Evaporative Coolers and Air Washers 312

Nonmandatory Appendices
CA-A Division of Responsibility 318
CA-B Design Recommendations 320

Copyright ASME International
Provided by IHS under license with ASME
No reproduction or networking permitted without license from IHS
Not for Resale

ARTICLE CA-1000
INTRODUCTION

CA-1100 SCOPE

CA-1110 GENERAL REQUIREMENTS

This section establishes requirements for the design, manufacture, testing, and documentation for forced circulation air cooling and heating coils, air washers, evaporative coolers, and electric heating coils used in nuclear safety-related (AA-1130) air conditioning and air and gas treatment systems in nuclear facilities. Nonmandatory Appendix A may be used for the determination of responsibilities under this section.

CA-1120 PURPOSE

The purpose of this Section is to ensure that the equipment and components included herein are adequate for use in nuclear safety-related systems.

CA-1130 APPLICABILITY

This section shall be applied to the design, manufacture, testing, and documentation of all nuclear safety-related forced circulation air cooling and heating coils, air washers, evaporative coolers, and electric heating coils used in nuclear safety-related air conditioning and air and gas treatment systems used in nuclear facilities.

CA-1131 Clarification of Code Applicability

Pressure retaining parts whose design, materials, manufacture, test, and documentation are covered by the ASME Code shall be in accordance with the applicable requirements of that Code. When conflict exists between this section and the Code, the latter shall take precedence.

CA-1132 Exclusion of Components

Conditioning equipment and associated accessories not included in this section are humidifiers, dehumidifiers of the adsorption type, infrared heating devices, controllers, valves, strainers, traps, pumps, refrigerant expansion valves, shell- and tube-type refrigerant evaporators and condensers, and compressors.

CA-1133 Interfacing Boundaries

The requirements of this section are limited to the flange face of the coil, the air washer or evaporative cooler inlet and outlet airside connection, the piping connections on the fluid side, and the electrical control cabinet for electrical connections.

CA-1200 DEFINITIONS AND TERMS

CA-1210 GENERAL

Only specialized terminology not defined elsewhere is listed below. Also see the Section AA Glossary and ASHRAE *Terminology of Heating, Ventilation, Air-Conditioning, & Refrigeration.*

CA-1220 WATER, STEAM, AND VOLATILE REFRIGERANT COILS

brackish water: water with a high dissolved solid content, equal to or greater than 5000 ppm (mg/L).

building structure: that part of a power plant whose purpose is to support, house, and protect nuclear safety class systems or components.

coil ratings: ratings derived from performance data corresponding to specified operating conditions. These are determined by extension of test data to operating conditions other than test, and for different coil sizes

Copyright ASME International
Provided by IHS under license with ASME
No reproduction or networking permitted without license from IHS
Not for Resale

and row depths of a particular coil line by the methods established in ASHRAE 33.

component support: a structural element which carries the component weight and transmits loads from the ASME Code stamped component to the building structure.

fresh water: water with a low to moderate dissolved solid content, less than 5000 ppm (mg/L).

intervening element: a structure in the support load path of an ASME Code stamped component that is not designed to the requirements of that Code, but is located between the component support and the nuclear facility building structure.

nozzle: inlet or outlet connections located between the header and system piping.

return bend: a U-shaped section of the tube located on the tube ends.

CA-1230 AIR WASHERS AND EVAPORATIVE COOLERS

baffles: a section of formed blades or screen at the air entrance of an air washer. They produce a uniform flow by their resistance and, in the case of formed blades, prevent upstream flow of airborne water from the spray chamber.

carryover: unevaporated water droplets passing through the eliminator.

eliminators: a section of parallel blades having contours that will remove water drops from the airstream; this section is located downstream from the spray chamber.

fill: wetted surface media in evaporative coolers.

header: the manifold for water distribution in the spray chamber of the washer, located at the end of the pump discharge line.

nipples: extensions that lead from the standpipe (manifold) to the nozzles.

side blanks: barriers extending from the side panels to the eliminator section that prevent water and drops from escaping around the eliminators and into the discharge plenum.

spacers: notched plates or other devices that hold baffles and eliminators equidistant and parallel.

standpipes: extensions providing vertical distribution of water from the header manifold.

top blanks: barriers, equidistant and parallel, extending from the top panel to the eliminators.

CA-1240 ELECTRIC HEATING COILS

coil, finned tubular: a helically wound coil of resistance wire, insulated and centered in a metal sheath that has extended surface (fins) mechanically bonded to the sheath.

coil, heating: an electric coil for use in an airstream whose circulation is caused by a difference in pressure produced by a fan or blower; the electric coil is used for heating.

coil, open: coil of bare resistance wire.

element support bracket: a formed bracket that supports the heating elements and maintains design clearance between elements.

element terminal: a device crimped to the end of resistance wire.

frit: a glazed porcelain–glass coating with a thermal coefficient of expansion similar to the metal of the sheath and fin over the operating range of the heating element.

heater frame, flanged: a heater frame designed to be installed between sections of ductwork or air handling equipment by bolting between the heater flange and mating flange.

heater frame, slip-in: a heater frame designed to be installed through an opening in the ductwork or air handling equipment housing.

heater terminal box: a metal enclosure, with a hinged or removable cover, that is attached to the heater frame. The heater terminal box contains the heating element terminations and thermal cutouts; the terminal box may also contain the heater controls.

heating element: an electric resistance element, either open coil or finned tubular type, connected across line voltage to produce heat.

insulator bushing: a high-temperature ceramic or phenolic sleeve staked into the element support bracket through which open heating elements are strung.

remote control panel: a metal enclosure, with a hinged or removable cover, mounted independently of the heater frame; the control panel contains the heater controls.

Copyright ASME International
Provided by IHS under license with ASME
No reproduction or networking permitted without license from IHS
Not for Resale

(03)

ARTICLE CA-2000
REFERENCED DOCUMENTS

The codes and standards referenced below shall supplement those documents listed in Section AA. The latest edition shall be used if no publication date is specified.

ANSI/ARI 410-91, Forced Circulation Air-Cooling and Air Heating Coils

Publisher: Air Conditioning and Refrigeration Institute (ARI), 4100 North Fairfax Drive, Arlington, VA 22203

ANSI/SAE AMS 3410H-1992 Flux, Silver Brazing

ANSI/SAE AMS 3411C-1992, Flux, Silver Brazing, High Temperature

Publisher: Society of Automotive Engineers (SAE), 400 Commonwealth Drive, Warrendale, PA 15096-0001

ARI 430-99, Central Station Air Handling Units

ASHRAE 33-78, Methods of Testing Forced Circulation Air Cooling and Air Heating Coils

ASHRAE Terminology of Heating, Ventilation, Air-Conditioning, & Refrigeration, Second Edition, 1991

Publisher: American Society of Heating, Refrigerating, and Air Conditioning Engineers, Inc. (ASHRAE), 1791 Tullie Circle, NE, Atlanta, GA 30329

ASME B16.5-97, Pipe Flanges and Flanged Fittings

Publisher: American Society of Mechanical Engineers (ASME International), Three Park Avenue, New York, NY 10016-5990; Order Department: 22 Law Drive, Box 2300, Fairfield, NJ 07007-2300

SSPC-Vis 1-89, Visual Standard for Abrasive Blast Cleaned Steel

SSPC-PA1-82, Shop, Field and Maintenance Painting

SSPC-SP6-94, Commercial Blast Cleaning

Publisher: The Society for Protective Coatings (SSPC), 40 24th Street, Pittsburgh, PA 15222-4656

UL 1996B-1996, Standard for Duct Heaters

Publisher: Underwriters Laboratories, Inc. (UL), 333 Pfingsten Road, Northbrook, FL 60062-2096

Copyright ASME International
Provided by IHS under license with ASME
No reproduction or networking permitted without license from IHS
Not for Resale

ARTICLE CA-3000
MATERIALS

CA-3100 GENERAL REQUIREMENTS

CA-3110 MATERIAL SPECIFICATIONS

The ASME and ASTM specifications listed in Tables CA-3200, CA-3300, and CA-3400 contain requirements for the chemical composition, material thickness limits, minimum yield strength, and tensile strength for each grade designation covered. Where a grade designation is not assigned a minimum yield strength and a tensile strength, tests in accordance with ASTM A 370 shall be conducted in order to obtain these values. Maximum allowable design stress values shall be calculated by the procedures in Article AA-4000.

(03) CA-3200 WATER, STEAM, AND VOLATILE REFRIGERANT COIL MATERIALS

CA-3210 PRESSURE-RETAINING MATERIALS FOR WATER AND STEAM COILS

(a) Allowable stresses and yield strengths of materials for all pressure-retaining items shall conform to the requirements given in the ASME Code for the appropriate class of service. For Codes of Record prior to the 1992 Edition, use Section III Appendices, Tables I-7.0, I-8.0, or I-13.3, as applicable. For Codes of Record beginning with the 1992 Edition, use Section II, Part D, Subpart 1, Tables 1A, 1B, and Y-1, as applicable.

(b) WARNING: Exposure to freshly generated fumes from cadmium-bearing silver brazing alloys has resulted in documented cases of occupational disease. Such fumes are toxic and contain cadmium oxide which is a suspected carcinogen. Refer to SFA-5.8 for alloys in this category. Strict safety and ventilation rules shall be observed if these alloys are used.

CA-3220 PRESSURE-RETAINING MATERIALS FOR VOLATILE REFRIGERANT COILS

(a) Material for all pressure-retaining items shall conform to the material requirements of ANSI/ASME B31.5, Table 502.3.1. In addition to this Table, the materials shall meet the requirements of this Code. All materials selected shall be suitable for the intended service.

(b) WARNING: Exposure to freshly generated fumes from cadmium-bearing silver brazing alloys has resulted in documented cases of occupational disease. Such fumes are toxic and contain cadmium oxide which is a suspected carcinogen. Refer to SFA-5.6 for alloys in this category. Strict safety and ventilation rules shall be observed if these alloys are used.

CA-3230 NONPRESSURE-RETAINING MATERIALS

Materials for safety-related extended fin coils shall be selected from Table CA-3230.

CA-3240 LOAD-BEARING MEMBERS

Materials that are part of the water coil casing and are used for component support and transmission of loads from the pressure-retaining boundary to the intervening element structure shall conform to the requirements of the ASME Code, Section III, Table NF-2122(a)-1. Applicable ASME Code Cases in effect on the date of the Code edition and addenda listed in the certified design specification may be used by mutual consent of the Owner or his designee and the Certificate Holder. Boundary definitions and limits shall be per NF-1130. Bolts and nuts transmitting loads shall be supplied in accordance with Subsection NF.

Copyright ASME International
Provided by IHS under license with ASME
No reproduction or networking permitted without license from IHS
Not for Resale

CA-3250 NONLOAD-CARRYING MEMBERS

Materials that are part of the coil casing or tube support and for which no structural credit is taken do not have to comply with the ASME Code, Section III, Subsection NF; however, they shall be selected from Table CA-3230.

CA-3300 AIR WASHER AND EVAPORATIVE COOLER MATERIALS

CA-3310 GENERAL REQUIREMENTS

Materials for air washers, evaporative coolers, and accessories shall be capable of meeting all requirements of CA-4320. Materials shall be in conformance with the ASME or ASTM specifications listed in Table CA-3310, as a minimum. Materials that exceed the requirements in Table CA-3310 may be used when required by the design specification or Article AA-4000.

CA-3400 ELECTRIC HEATING COIL MATERIALS

CA-3410 GENERAL REQUIREMENTS

Materials for electric heating coils and accessories shall meet all requirements of CA-4400. Materials shall be in conformance with the ASME or ASTM specifications listed in Table CA-3410, as a minimum. Materials that exceed the requirements in Table CA-3410 may be used subject to the approval of the Owner or his designee.

CA-3500 CERTIFICATION OF MATERIALS

CA-3510 GENERAL REQUIREMENTS

Certification of materials shall be in accordance with Articles AA-3000 and AA-8000, and the specific requirements of the following subparagraphs.

(a) The materials supplied shall be in full compliance with the appropriate ASME, AWS, or ASTM specification. The thickness shall be as specified in the Design specification or as required in Article CA-4000.

(b) The coil Manufacturer shall supply to the Purchaser, as a minimum, certified material test reports (CMTR) of chemical and physical properties of all materials that form pressure boundaries. The pressure boundary includes the coil tubing, headers, return bends, nozzles, and flanges. A Material Manufacturer's Certificate of Compliance with the material specification, grade, class, and heat-treated condition, as applicable, may be provided in lieu of a CMTR for the coil material defined below:

(1) pipe, fittings, flanges, material for valves and tubes (except heat exchanger tubes) NPS $\frac{3}{4}$ and less;

(2) bolting of 1 in. nominal diameter and less.

(c) ASME Code, Section III, Subsection NF, materials shall be supplied with CMTRs, except as designated in NF-2600.

(d) For nonpressure boundary coil material, electric heaters, air washers, and evaporative coolers, a Material Manufacturer's Certificate of Compliance with the material specification, grade, class, and heat-treated condition, as applicable, is acceptable in lieu of a CMTR.

Copyright ASME International
Provided by IHS under license with ASME
No reproduction or networking permitted without license from IHS
Not for Resale

TABLE CA-3230
ALLOWABLE MATERIALS — NONPRESSURE-RETAINING COMPONENTS FOR WATER, STEAM, AND VOLATILE REFRIGERANT COILS

ASME Designator	ASTM Designator	Publication Title
Plate, Sheet, and Strip		
...	A 90/A 90M	Standard Test Method for Weight [Mass] of Coating on Iron and Steel Articles with Zinc or Zinc-Alloy Coatings
...	A 167	Stainless and Heat-Resisting Chromium–Nickel Steel Plate, Sheet, and Strip
SA-240	A 240	Heat-Resisting Chromium and Chromium–Nickel Stainless Steel Plate, Sheet, and Strip for Pressure Vessels
SA-414	A 414	Carbon Steel Sheet for Pressure Vessels
...	A 653/A 653M	Standard Specification for Steel Sheet, Zinc-Coated (Galvanized) or Zinc-Iron Alloy-Coated (Galvannealed) by the Hot-Dip Process
...	B 122	Copper–Nickel–Zinc Alloy (Nickel Silver), and Copper–Nickel Alloy Plate, Sheet, Strip, and Rolled Bar
SB-152	B 152	Copper Sheet, Strip, Plate, and Rolled Bar
SB-209	B 209	Aluminum-Alloy Sheet and Plate
Hardware		
SA-193	A 193	Alloy-Steel and Stainless Steel Bolting Materials for High-Temperature Service
SA-194	A 194	Carbon and Alloy-Steel Nuts for Bolts for High-Pressure and High-Temperature Service
SA-307	A 307	Carbon Steel, Externally Threaded Standard Fasteners
SA-325	A 325	High-Strength Bolts for Structural Steel Joints
SA-354	A 354	Quenched and Tempered Alloy-Steel Bolts, Studs, and Other Externally Threaded Fasteners
SA-449	A 449	Quenched and Tempered Steel Bolts and Studs
SA-563	A 563	Carbon and Alloy-Steel Nuts
...	F 436	Hardened Steel Washers
Structurals		
SA-36	A 36	Structural Steel
SA-479	A 479	Stainless and Heat-Resisting Steel Wire, Bars, and Shapes for Use in Boilers and Other Pressure Vessels
SB-62	B 62	Composition Bronze or Ounce Metal Castings
SB-98	B 98	Copper–Silicon Alloy Rod, Bar, and Shapes
SB-133	B 133	Copper Rod and Bar

Copyright ASME International
Provided by IHS under license with ASME
No reproduction or networking permitted without license from IHS
Not for Resale

(03)

TABLE CA-3310
ALLOWABLE MATERIALS — AIR WASHERS AND EVAPORATIVE COOLERS

ASME Designator	ASTM Designator	Publication Title
Plates, Sheet, and Strip		
...	A 90/A 90M	Standard Test Method for Weight [Mass] of Coating on Iron and Steel Articles with Zinc or Zinc-Alloy Coatings
...	A 167	Stainless and Heat-Resisting Chromiun–Nickel Steel Plate, Sheet, and Strip
SA-240	A 240	Heat-Resisting Chromium and Chromium–Nickel Stainless Steel Plate, Sheet, and Strip for Pressure Vessels
...	A 653/A 653M	Standard Specification for Steel Sheet, Zinc-Coated (Galvanized) or Zinc-Iron Alloy-Coated (Galvannealed) by the Hot-Dip Process
Structurals and Bars		
SA-36	A 36	Structural Steel
SA-479	A 479	Stainless and Heat-Resisting Steel Wire, Bars, and Shapes for Use in Boilers and Other Pressure Vessels
Pipe		
SA-53	A 53	Pipe, Steel, Black and Hot-Dipped, Zinc-Coated Welded and Seamless
SA-351	A 351	Austenitic Steel Castings for High-Temperature Service
SA-376	A 376	Seamless Austenitic Steel Pipe for High-Temperature Central-Station Service
...	A 120	Pipe, Steel, Black and Hot-Dipped, Zinc-Coated (Galvanized) Welded and Seamless, for Ordinary Uses
Hardware		
SA-193	A 193	Alloy-Steel and Stainless Steel Bolting Materials for High-Temperature Service
SA-194	A 194	Carbon and Alloy-Steel Nuts for Bolts for High-Pressure and High-Temperature Service
SA-307	A 307	Carbon Steel, Externally Threaded Standard Fasteners
SA-325	A 325	High-Strength Bolts for Structural Steel Joints
SA-354	A 354	Quenched and Tempered Alloy-Steel Bolts, Studs, and Other Externally Threaded Fasteners
SA-449	A 449	Quenched and Tempered Steel Bolts and Studs
SA-563	A 563	Carbon and Alloy-Steel Nuts
...	F 436	Hardened Steel Washers
...	F 568	Carbon and Alloy-Steel Externally Threaded Metric Fasteners
Coatings		
...	A 123	Zinc (Hot-Galvanized) Coatings on Products Fabricated from Rolled, Pressed, and Forged Steel Shapes, Plates, Bars, and Strip

Copyright ASME International
Provided by IHS under license with ASME
No reproduction or networking permitted without license from IHS
Not for Resale

TABLE CA-3310
ALLOWABLE MATERIALS — AIR WASHERS AND EVAPORATIVE COOLERS (CONT'D)

ASME Designator	ASTM Designator	Publication Title
Flanges and Fittings		
SA-105	A 105	Carbon Steel Forgings, Carbon Steel, for Piping Components
SA-181	A 181	Forgings, Carbon Steel, for General Purpose Piping
SA-182	A 182	Forged or Rolled Alloy-Steel Pipe Flanges, Forged Fittings, and Valves and Parts for High-Temperature Service
SA-234	A 234	Piping Fittings of Wrought Carbon Steel and Alloy Steel for Moderate and Elevated Temperatures
SA-403	A 403	Wrought Austenitic Stainless Steel Piping Fittings
SA-420	A 420	Piping Fittings of Wrought Carbon Steel and Alloy Steel for Low-Temperature Service

TABLE CA-3410 (03)
ALLOWABLE MATERIALS — ELECTRIC HEATING COILS

ASME Designator	ASTM Designator	Publication Title
Plate, Sheet, and Strip		
...	A 90/A 90M	Standard Test Method for Weight [Mass] of Coating on Iron and Steel Articles with Zinc or Zinc-Alloy Coatings
...	A 167	Stainless and Heat-Resisting Chromium–Nickel Steel Plate, Sheet, and Strip
SA-240	A 240	Heat-Resisting Chromium–Nickel Stainless Steel Plate, Sheet, and Strip Pressure Vessels
...	A 366	Steel, Carbon, Cold-Rolled Sheet, Commercial Quality
...	A 569	Steel, Carbon (0.15 Maximum, Percent), Hot-Rolled Sheet and Strip, Commercial Quality
...	A 653/A 653M	*Standard Specification for Steel Sheet, Zinc-Coated (Galvanized) or Zinc-Iron Alloy-Coated (Galvannealed) by the Hot-Dip Process*
Elements		
...	A 269	Seamless and Welded Austenitic Stainless Steel Tubing for General Service
...	B 344	Drawn or Rolled Nickel–Chromium and Nickel–Chromium–Iron Alloys for Electrical Heating Elements
Hardware		
...	...	See Table CA-3300 for allowable materials
Structurals		
SA-36	A 36	Structural Steel
...	A 500	Cold-Formed Welded and Seamless Carbon Steel Structural Tubing in Rounds and Shapes

Copyright ASME International
Provided by IHS under license with ASME
No reproduction or networking permitted without license from IHS
Not for Resale

ARTICLE CA-4000
DESIGN

CA-4100 DESIGN CONDITIONS FOR WATER AND STEAM COILS

CA-4110 DESIGN SPECIFICATION

A design specification shall be prepared and certified by the Owner or his designee in accordance with NCA-3255 of the ASME Code, in sufficient detail to provide a complete basis for coil design in accordance with this Code. The design specification shall include, as a minimum, the following data:

(a) ASME Code edition, addenda, class, and applicable Code Cases

(b) coil type

(c) corrosion allowance per ASME Code, Section III, NX-3121

(d) fouling factor — fluid side

(e) safety classification per ASME Code, Section III, NCA-2110(d)

(f) boundaries of jurisdiction per NCA-3254

(g) tube, fin, minimum material thickness

(h) maximum allowable fin spacing

(i) materials of construction

(j) conditions of operation — normal, accident, containment pressurization (leak) test

(1) entering air temperature, dry bulb/wet bulb, °F (°C)

(2) leaving air temperature, dry bulb/wet bulb, °F (°C)

(3) entering fluid temperature, °F (°C)

(4) air density, lb/ft^3 (kg/m^3)

(5) fluid-side flow rate, gal/min (m^3/s)

(6) entering airflow rate, standard ft^3/min (m^3/s)

(7) maximum fluid-side pressure drop, ft of H_2O (Pa)

(8) maximum air-side pressure drop, in. wg (Pa)

(9) minimum total heat transfer, Btu/hr (kW)

(10) maximum face velocity, ft/min (m/min)

(11) maximum environmental design pressure, psia (Pa)

(k) design and service loadings per ASME Code, Section III, NCA-2140

(l) radiation, total integrated dosage, rads

(m) coating system requirements

CA-4111 Additional Requirements

In addition to the requirements of CA-4110, the design specification shall contain a complete cooling water analysis, including tests for ammonium compounds.

CA-4120 TECHNICAL REQUIREMENTS

CA-4121 General

(a) The fluid side of the coil shall be designed, constructed, tested, and stamped in accordance with the ASME Code, Section III.

(b) All fluid-side coil components shall be, as a minimum, the same ASME code class as the fluid system in which they are to be installed. The design specification shall identify this code class.

(c) Coils shall be capable of meeting the design requirements of CA-4122 through CA-4134.

(d) Inspection and testing shall be in accordance with CA-5100.

CA-4122 Tubes

(a) All water coils shall be designed for a minimum tube velocity of 2 ft/sec (0.61 m/s) and maximum velocities as listed in Table CA-4122.

(b) Steam coils shall be capable of withstanding twice the maximum fluid-side pressure.

CA-4123 Return Bends

(a) Separate noncleanable return bends are allowed.

(b) Where a minimum wall thickness is specified, separate return bends shall be formed from a tube with an increased wall thickness sufficient to maintain the required wall thickness in the bends. As a minimum,

Copyright ASME International
Provided by IHS under license with ASME
No reproduction or networking permitted without license from IHS
Not for Resale

TABLE CA-4122
MAXIMUM WATER VELOCITIES IN WATER COILS

Alloy	Maximum Velocity			
	Fresh Water		Brackish Water	
	ft/sec	m/s	ft/sec	m/s
Copper (UNS C12200)	7	2.13	Not recommended	
90–10 Copper–Nickel (UNS C70600)	10	3.05	9	2.74
70–30 Copper–Nickel (UNS C71500)	15	4.57	12	3.66

such increased wall thickness shall be the equivalent of 1 gage heavier than the wall thickness required for straight tube.

(c) Hairpin (or U-bend) return bends are permitted only when wall thinning is allowed by the design specification. The amount of thinning in the outside fibers of a hairpin shall be in accordance with the ASME Code, Section II, Part B, SB-395, 14.3.

(d) Cleanable return bends shall be cast or machined fittings with plugs and gaskets.

CA-4124 Nozzles and Header Assembly

(a) Carbon steel nozzles, tubular headers, and water box headers shall have a minimum corrosion allowance of $^1/_{16}$ in. (1.6 mm).

(b) The water and steam header assembly shall be provided with a vent and drain connection.

(c) Cleanable tube coils shall be of the removable header type or the plug type with O-ring gaskets.

(d) Loading considerations shall be in accordance with CA-4130.

(e) Joints shall be brazed or welded in accordance with Article CA-6000.

(f) Nozzles shall be furnished with weld end preparation or flanges, as specified.

CA-4125 Fins

(a) Fins shall have a minimum thickness of 0.009 in. (0.23 mm).

(b) Fins shall be permanently bonded to the tubes by a mechanical expansion or tensioning process or by brazing.

(c) Fin spacing shall be specified in the design specification.

CA-4126 Casing and Tube Support (03)

(a) The casing and tube supports shall be designed to withstand, without causing permanent distortion or breach of integrity, stresses, and external overpressure as defined in Article AA-4000. Structural requirements for coils are given in CA-4130.

(b) Casings and tube supports shall be of approved material from Table CA-3230.

CA-4127 Design Recommendations

Design recommendations for safety-related coils are contained in Nonmandatory Appendix CA-B.

CA-4130 STRUCTURAL REQUIREMENTS FOR WATER, STEAM, AND VOLATILE REFRIGERANT COILS

CA-4131 General

Coils shall be designed in accordance with the structural requirements given in Article AA-4000. Structural requirements and load definitions specific to water and steam coils are given in CA-4132 through CA-4134.

CA-4132 Support Boundaries for Coils

Coils may be supported as a unit (as part of an air handling system) or line supported (as in an assembly inserted into a run of ductwork).

(a) In a unit supported coil assembly, the support boundary for the coil shall consist of the attachment and interface points between the air handling equipment housing and the coil.

(b) In a line supported coil assembly, the support boundary for the coil shall consist of the interface flanges or other mechanical connections between the

Copyright ASME International
Provided by IHS under license with ASME
No reproduction or networking permitted without license from IHS
Not for Resale

coil and ductwork that are designed to transfer all components of load across the joints.

(c) The coil supplier shall be responsible for specifying all information necessary to define the support boundary interfaces. This information shall include, but not necessarily be limited to

(1) configuration, size, and type of support attachments required;

(2) magnitudes and directions of all loads imposed on the anchorage points, including all static, dynamic, and operational loads resulting from the installed coil assembly. Loads shall be provided in a form that shall allow combinations to be considered as required in AA-4212; and

(3) any limitations, such as allowable nozzle loads, or other interface load requirements necessary to ensure that the coil can perform its required safety function under all design conditions.

CA-4133 Load Definition

Loads to be considered in the structural design of equipment are given in AA-4211 and AA-4212 with the following additions.

(a) Normal loads *N* shall include

(1) deadweight load: including any added weight due to water or the heat transfer medium.

(2) operating pressure load: the load resulting from the maximum pressure differential that may occur during normal operation. Included are loads imposed by normal design airflows and impact pressures resulting from rapid change of other airflow control devices in a system.

(3) nozzle loads: the shear and bending moments associated with the attached piping system.

(4) normal equipment interface load: the normal externally applied load or loads from adjacent equipment or ductwork attached to the coils.

(b) Thermal loads *T* shall include temperature induced loads resulting from constraint of force and displacements.

(c) Design and service limits shall be as follows:

(1) Pressure boundary limits shall conform to the ASME Code, Section III, NCA-2142.2, and Tables NC/ND-3321-1.

(2) For Subsection NF casings, limits shall be in accordance with NCA-2142.2, NF-3321, NF-3350, NF-3360, and Table NF-3523.2-1.

CA-4134 Structural Verification

CA-4134.1 Verification by Analysis. When verification of design by analysis is appropriate (see AA-4310 through AA-4340), the results of the analysis shall be compiled by the Manufacturer and submitted to the Owner or his designee in the form of a design verification stress report (DVSR). The DVSR shall identify the objectives, assumptions, analysis results, and the conclusions. Equipment shall be considered structurally verified if the stress conditions identified in Article AA-4000 are not exceeded under the applicable load combination.

CA-4134.2 Verification by Testing. When verification by testing is appropriate (see AA-4350), a design verification test procedure shall be compiled and submitted to the Owner or his designee. Upon completion of the tests, a design verification test report (DVTR) shall be prepared by the Manufacturer and submitted to the Owner or his designee. The DVTR, as a minimum, shall identify the objectives, design criteria, assumptions, test results data, and conclusions of the design verification test (DVT). Equipment shall be considered structurally verified if before, during, and after the qualification test the equipment performs its safety-related function.

CA-4134.3 Verification by Comparison. When equipment to be structurally verified is of similar design to other equipment that has been verified in accordance with CA-4134.1 or CA-4134.2, and when all elements of the unverified equipment are shown to be equal to or more rigid than the similar, verified equipment, and when it can be shown that the previously verified equipment has greater loading conditions, the equipment may be verified by comparison in lieu of analysis or tests. When verification by this method is selected, a design verification by comparative evaluation report (DVCER) shall be submitted to the Owner or his designee. The DVCER shall identify the specific equipment to be verified, and include a copy of the appropriate DVSR or DVTR and a detailed comparative evaluation between the two pieces of equipment.

CA-4134.4 Design Reports

(a) For coils designed and fabricated in accordance with the ASME Code, Section III, the design report requirements of NCA-3550 shall be met.

(b) For casings designed to ASME Code Section III, Subsection NF, the requirements of NF-3132 and CA-4134.4(a) shall be met.

CA-4134.5 Design Verification Acceptance Criteria

(a) Coils designed and fabricated in accordance with the ASME Code shall be considered structurally verified if the stress limits identified in Tables NC/ND-3321-1 are not exceeded under the applicable load combinations.

Copyright ASME International
Provided by IHS under license with ASME
No reproduction or networking permitted without license from IHS
Not for Resale

(b) Coil casings designed to ASME Code, Section III, Subsection NF, shall be considered structurally verified if the stress limits given in NF-3321, NF-3350, NF-3360, and Table NF-3523.2-1 are not exceeded under the applicable load combinations.

(c) Equipment not designed and fabricated in accordance with the ASME Code shall be considered structurally verified if the stress limits of Table AA-4323 are not exceeded under the load combinations of Table AA-4212.

CA-4134.6 Deflection Acceptance Criteria. Deflection is not a failure mode applicable to installed coils. No acceptance criteria are therefore required.

CA-4200 DESIGN CONDITIONS FOR VOLATILE REFRIGERANT COILS

CA-4210 DESIGN SPECIFICATION

A design specification shall be prepared by the Owner or his designee and certified by a registered professional engineer in sufficient detail to provide a complete basis for coil design. The specification shall include, but not be limited to, the following items as required for proper design and construction of the coil in accordance with this and other applicable codes and the Owner's requirements:

(a) design and testing standards
(b) materials of construction
(c) refrigerant type
(d) safety classifications per ANSI/ASHRAE 15
(e) maximum allowable fin spacing
(f) conditions of operation — normal, accident
(1) total heat transfer, Btu/hr (kW)
(2) sensible heat transfer, Btu/hr (kW)
(3) entering air temperature, dry bulb/wet bulb, °F (°C)
(4) leaving air temperature, dry bulb/wet bulb, °F (°C)
(5) minimum refrigerant suction temperature, °F (°C)
(6) entering airflow rate, standard ft^3/min (m^3/s)
(7) maximum air-side pressure drop, in. wg (Pa)
(8) maximum face velocity, ft/min (m/min)
(9) design loadings
(10) radiation, total integrated dosage, rads
(11) coating system requirements

CA-4220 TECHNICAL REQUIREMENTS

CA-4221 General

(a) Volatile refrigerant coils shall be designed in accordance with the structural requirements given in Article AA-4000. Structural requirements and load definitions specific to volatile refrigerant coils are given in CA-4132.1 through CA-4134.6.

(b) The fluid side of the volatile refrigerant coil shall be designed, constructed, rated, and tested in accordance with the design specification and ANSI/ASME B31.5, ARI 410, and ASHRAE 33.

(c) Inspection and testing shall be in accordance with CA-5100.

(d) Materials of construction will be in accordance with CA-3100.

(e) Volatile refrigerant coils shall be capable of meeting the design requirements of CA-4222 through CA-4227.

(f) Welding and brazing shall be in accordance with Article CA-6000.

CA-4222 Tubes

Volatile refrigerant coil tubes shall be capable of withstanding $1\frac{1}{2}$ times the maximum fluid-side pressure defined in the design specification.

CA-4223 Return Bends

Hairpin (or U-bend) return bends are permitted only when wall thinning is allowed by the design specification. The amount of thinning in the outside fibers of a hairpin shall be in accordance with the ASME Code, Section II, Part B, SB-395, 14.3.

CA-4224 Distributors

(a) Distributors shall be utilized when required to disperse the refrigerant evenly through the coil.

(b) Distributor feed tubes shall be oriented in a nonuniform configuration and shall be exactly the same length for each circuit.

(c) Each distributor and distributor feed tube shall be constructed of materials compatible with other adjoining materials and with CA-3100.

CA-4225 Suction Header Assembly

Vertical headers shall have a bottom outlet to allow gravity drainage of refrigerant oil in the suction line. The suction header shall be nearest the entering air face of the coil.

Copyright ASME International
Provided by IHS under license with ASME
No reproduction or networking permitted without license from IHS
Not for Resale

CA-4226 Fins

Fins shall be designed in accordance with CA-4125. Fin spacing shall be as specified in the design specification.

(03)

CA-4227 Casing and Tube Support

(a) The casing and tube support shall be designed in accordance with CA-4126.

(b) Casings and tube supports shall be of approved material from Table CA-3230.

CA-4228 Design Recommendations

Design recommendations for safety-related coils are contained in Nonmandatory Appendix B.

CA-4229 Structural Requirements for Volatile Refrigerant Coils

Structural requirements for volatile refrigerant coils shall be in accordance with CA-4130 through CA-4134.

CA-4300 DESIGN CONDITIONS FOR AIR WASHERS AND EVAPORATIVE COOLERS

CA-4310 DESIGN SPECIFICATION

A design specification shall be prepared by the Owner or his designee in sufficient detail to provide a complete basis for equipment design in accordance with this Code. The design specification shall include, as a minimum, the following data:

(a) equipment type
  (1) air washer
  (2) evaporative cooler
(b) materials of construction
(c) conditions of operation, normal and accident
  (1) entering temperature, dry bulb/wet bulb, °F (°C)
  (2) leaving temperature, dry bulb/wet bulb, °F (°C)
  (3) total heat transfer, Btu/hr (kW)
  (4) operating air density, lb/ft^3 (kg/m^3)
  (5) minimum and maximum airflow rate, standard ft^3/min (m^3/s)
  (6) minimum and maximum air velocity, ft/min (m/min)
  (7) air pressure loss, in. wg (Pa)
  (8) humidifying effectiveness, %
(d) pump flow rate, gal/min (L/s)
(e) pump head, ft (Pa)
(f) makeup water flow, gal/min (L/s)
(g) space limitations
(h) drain connections, types and sizes
(i) insulation requirements
(j) design loadings
(k) radiation, total integrated dosage, rads
(l) electrical characteristics
(m) maximum specified design temperature

CA-4320 TECHNICAL REQUIREMENTS

CA-4321 General

(a) Air washers and evaporative coolers shall be capable of meeting the design requirements of CA-4322 through CA-4328 and the structural requirements of CA-4330.

(b) Spray-type air washers shall consist of a chamber or casing (including spray system), a water tank, a recirculating water pump, and, when required, a moisture eliminator section.

(c) Cell-type air washers shall consist of an array of cells packed with glass, metal, or fiber media held in place with wire mesh screens. Cells shall be arranged in tiers. Each tier shall be equipped with a spray header and drain pan, and with the exception of the bottom tier, a drain pipe. This type of washer also consists of a water tank, pump, and downstream moisture eliminator section if required.

(d) Wetted media evaporative air coolers shall consist of a casing housing, evaporative pack, water tank, recirculating pump, and water distribution system.

(e) Rigid media evaporative coolers shall use a rigid corrugated material as the wetted surface.

(f) Other types of air washers and evaporative coolers shall be acceptable, provided the design and performance criteria meet the requirements of the design specification.

(g) When required by the design specification, units shall be insulated or contain air distribution baffles, or both.

CA-4322 Chamber

(a) The panels and tank shall be sealed and fastened to provide a leak-tight joint.

(b) Side and top blanks attached to the panels and extending to the eliminator bank shall minimize the bypass of air and spray around the eliminator section.

(c) Intermediate spacers shall provide the spacing and support functions for the eliminators and baffles.

(d) When required, access doors located on spray chamber panels shall be watertight or provided with

Copyright ASME International
Provided by IHS under license with ASME
No reproduction or networking permitted without license from IHS
Not for Resale

an outside drain that can be directed back into the chamber.

(e) Internal bracing in the spray pattern shall not be located closer than 6 in. (152 mm) from the orifice of a nozzle.

(f) The spray chamber shall be accessible for maintenance.

(03) CA-4323 Eliminators

(a) Spray removal from the airstream shall be accomplished by a bank of eliminators designed to capture and drain spray water into the washer tank.

(b) Eliminators shall be formed and properly spaced to provide effective spray removal at the velocity and pressure drop stated in the design specification.

(c) The material shall be a minimum of 24 gage steel in accordance with ASTM 653/653M Coating Designation G90, or 26 gage stainless steel.

(d) The material shall be capable of maintaining its shape at the maximum specified temperature and velocity.

(e) The eliminator bank shall be designed to provide easy access for cleaning each blade.

(f) The eliminator bank shall be provided with a plate extending below the water level at the intake to prevent the bypass of air and spray under the bank.

(g) Scum plates located at the bottom of the eliminator bank on the discharge side shall be provided to prevent foam from escaping into the airstream.

CA-4324 Fill

(a) Rigid and semirigid fill media shall be designed to provide wetted surfaces from which water evaporates and excess water drains into the tank.

(b) Fill media shall be of resilient fibrous glass or cellulose material, or of rigid, corrugated material of cellulose or glass fiber sheet that has been impregnated with suitable material to provide rigidity and shape-holding characteristics without destroying its hygroscopic properties. The media may be chemically treated to increase wettability. The fill shall be treated to resist bacteria, fungi, and other microorganisms. Fill media shall be selected to perform in accordance with the design conditions.

(03) CA-4325 Baffles

(a) Baffles shall provide uniform airflow to the spray chamber.

(b) Broken plate baffles shall be a minimum of 24 gage steel in accordance with ASTM 653/653M Coating Designation G90, or 26 gage stainless steel.

(c) The material shall be capable of maintaining its shape at the maximum specified temperature and velocities.

(d) The baffle bank shall be designed for easy access for cleaning each blade.

(e) Perforated metal baffles with greater than 65% net free area shall be not less than 18 gage steel in accordance with ASTM 653/653M Coating Designation G90, or 20 gage stainless steel.

CA-4326 Spray Bank

(a) Uniform spray distribution shall be provided in the spray chamber of the air washers and evaporative coolers to produce 90% saturation efficiency at 500 FPM face velocity. Distribution headers for soaking the media shall extend the full length of and be above the media, be equally spaced, and have uniform distribution of water at each orifice to produce the stated efficiency.

(b) Water flow shall not exceed 10 ft/sec (3 m/s) in the piping.

(c) Piping shall be not less than Schedule 40 galvanized or stainless steel.

(d) Welding of piping shall be in accordance with CA-6120(c).

(e) Nozzles shall be made from materials compatible with piping materials.

(f) The header shall be attached by bolting or welding to the tank, supports, or panels. Welding shall be in accordance with Article CA-6000.

(g) Cleanout provisions, such as pipe caps or blind flanges, shall be provided to flush the header and standpipes if required by the design specification.

(h) Headers shall be not less than NPS 4 and standpipes NPS $1\frac{1}{2}$. Nipples shall not be less than NPS $\frac{3}{8}$. Headers for fill-type evaporative coolers shall not be less than NPS $1\frac{1}{2}$, Schedule 80.

(i) Bolted flanges for the header section shall be as follows:

(1) stainless steel Type 304 (UNS S30400), ANSI/ASME B16.5 Class 150 flange;

(2) forged steel ANSI/ASME B16.5 Class 150 flange;

(3) forged steel flanges shall be galvanized in accordance with ASTM A 123.

CA-4327 Tanks

(a) The tank shall provide a sump for the spray system, a mount for accessories such as makeup, quick-fill, and level control.

Copyright ASME International
Provided by IHS under license with ASME
No reproduction or networking permitted without license from IHS
Not for Resale

(b) The tank plate material shall not be less than 10 gage steel in accordance with ASTM 653/653M Coating Designation G90, or 12 gage stainless steel.

(c) Supports for eliminators, fill, and baffles shall be spaced to allow no greater deflection than $^1/_{16}$ in. (1.6 mm) of the span between supports during anticipated construction, normal or accident conditions.

(d) The pump suction shall be threaded, flanged, and bolted or welded through the wall. If the pump is mounted with a vertical shaft, it shall be bolted to a submerged suction plate.

(e) All welding on the tank shall be in accordance with CA-6120(c).

CA-4328 Miscellaneous Requirements

(a) Welds on galvanized steel shall be cleaned and coated with a zinc-rich inorganic paint in accordance with AA-6535.

(b) Electrical installation for lighting, power, and control wiring shall be in accordance with ANSI/NFPA 70, UL 1096, and the design specification.

(c) Air washers and evaporative coolers shall be designed in modules and field erected where size precludes shipment by common carriers.

CA-4329 Design Recommendations

Design recommendations for air washers and evaporative coolers are contained in Nonmandatory Appendix CA-B.

CA-4330 STRUCTURAL REQUIREMENTS

CA-4331 General

Air washers and evaporative coolers shall be designed in accordance with structural requirements given in Article AA-4000. Structural requirements and load definitions specific to air washers and evaporative coolers are given in CA-4332 through CA-4334.

CA-4332 Support Boundary for Air Washers and Evaporative Coolers

(a) The support boundary for air washers or evaporative coolers shall consist of the interface flanges, pipe nozzles, mounting bolts, or other mechanical connections between the air washer or evaporative cooler and adjacent ductwork or equipment that are designed to transfer all components of load.

(b) The air washer or evaporative cooler Manufacturer shall be responsible for specifying all information necessary to define the support boundary interfaces. This information shall include, but not necessarily be limited to:

(1) configuration, size, and type of support attachments required;

(2) magnitudes and directions of all loads imposed on the anchorage points, including all static, dynamic, and operational loads. Loads shall be provided in a form that shall allow combinations to be considered, as required in AA-4212.

(3) any limitations, such as allowable nozzle loads, deflection limits, or other interface load requirements necessary to ensure that the assembly can perform its required safety function under all design conditions.

CA-4333 Load Definition

Loads to be considered in the structural design of air washers and evaporative coolers are given in AA-4211 and AA-4212, with the following additions:

(a) Normal loads *N* which shall include:

(1) deadweight load: including any added weight due to water or other medium.

(2) operating pressure load: the load resulting from the maximum pressure differential that may occur during normal operation. Included are loads imposed by normal design airflows and impact pressures resulting from rapid change of other devices in a system.

(3) nozzle loads: the shear and bending moments associated with the attached piping systems.

(4) normal equipment interface load: the normal externally applied loads from interfacing equipment or ductwork attached to the equipment.

(5) attachment loads: the deadweight load associated with any unit attachments such as actuators or gages.

(b) Sloshing effects of liquids used in air washer or evaporative cooler spray systems.

(c) Thermal loads *T* which shall include temperature-induced loads resulting from constraint of force and displacements.

CA-4334 Structural Verification

(a) Air washers and evaporative coolers and all of their components shall be capable of remaining functional under the structural loadings given in CA-4333.

(b) Structural verification shall be in accordance with CA-4134.

Copyright ASME International
Provided by IHS under license with ASME
No reproduction or networking permitted without license from IHS
Not for Resale

CA-4400 DESIGN CONDITIONS FOR ELECTRIC HEATING COILS

CA-4410 DESIGN SPECIFICATION

A design specification shall be prepared by the Owner or his designee in sufficient detail to provide a complete basis for electric heating coil design in accordance with this Code. Design specifications shall include, as a minimum, the following data:

(a) entering temperature, dry bulb, °F (°C)
(b) relative humidity, percent
(c) leaving temperature, dry bulb, °F (°C)
(d) entering airflow, standard ft^3/min (m^3/s)
(e) air entering velocity, ft/min (m/min)
(f) line voltage, phase, Hz
(g) control voltage, phase, Hz
(h) coil type
  (1) flange
  (2) slip-in
(i) element type
  (1) open coil
  (2) fin tubular
(j) heater capacity, Btu/hr (kW)
(k) number of stages
(l) materials of construction
(m) location of controls
  (1) integral
  (2) remote
(n) type of controls
  (1) electric
  (2) pneumatic
(o) design loadings
(p) radiation, total integrated dosage, rads

CA-4420 TECHNICAL REQUIREMENTS

CA-4421 General

(a) Electric heating coils shall be designed following the guidelines of ANSI/NFPA 70 and UL 1096, but need not bear the UL label.

(b) Electric heating coils shall be capable of meeting the design requirements of CA-4422 through CA-4429 and the structural requirements of CA-4430.

CA-4422 Elements

(a) Elements shall be of open coil or finned tubular design. The resistance wire shall be in accordance with ASTM B 344.

(b) Open coil heating elements shall be 80% nickel and 20% chromium resistance wire centered in a high temperature ceramic or phenolic sleeve.

(c) Finned tubular elements shall have 80% nickel and 20% chromium resistance wire centered in a metal sheath and insulated from the sheath by magnesium–oxide refractory.

(d) Sheath and fins shall be stainless steel, monel, or copper clad carbon steel. Carbon steel elements shall be coated with high-temperature aluminum paint or ceramic frit finish.

(e) Element hardware shall be stainless steel or monel. Insulators and bracket bushings shall be nonporous ceramic and securely positioned. Terminals shall be machine crimped to elements.

(f) Element support brackets shall be positioned not more than 4 in. (100 mm) apart for open coil elements and 18 in. (457 mm) apart for finned tubular elements. Stiffening ribs and gussets shall be provided for rigidity.

(g) Open and finned heating stages shall be arranged to prevent stratification when operating at less than full capacity. A minimum of the first one-third of heating elements shall be spread evenly across the heater face.

CA-4423 Frames

(a) Frames shall be flanged or slip-in.

(b) Stacking flanges shall be furnished when multiple sections are required.

(c) Frames, supports, and flanges shall be of approved materials from Table CA-3410.

CA-4424 Thermal Cutouts

(a) Primary and secondary temperature thermal cutouts shall be provided in accordance with UL 1096 and ANSI/NFPA 70 requirements. The primary thermal protection shall be the automatic reset type. The secondary thermal protection shall be the manually reset type, or replaceable.

(b) Heaters in multizone or dual-duct air handling units and heaters with frame widths over 36 in. (914 mm) shall be furnished with linear thermal cutouts that extend the full length of the frame.

CA-4425 Fan Interlock

Each heater shall be provided with a fan interlock, which can be either a fan relay or a built-in pressure differential-type airflow switch. Switches shall be provided in accordance with the requirements of UL 1096 and wired in series with the primary thermal protector.

Copyright ASME International
Provided by IHS under license with ASME
No reproduction or networking permitted without license from IHS
Not for Resale

CA-4426 Terminal Boxes

The terminal boxes shall meet NEMA standards. The enclosures shall be NEMA 1, 4, or 12, as required by the design specification. The terminal boxes shall be fabricated from stainless steel or carbon steel not less than 16 gage.

CA-4427 Electrical Requirements

(a) Electric heating coils shall be constructed in accordance with applicable requirements of ANSI/NFPA 70 and UL 1996. All internal wiring shall be factory installed and terminated at conveniently located terminal blocks to facilitate field wiring. No more than two wires shall be terminated on any one terminal block. Power and control terminals shall be clearly marked. Power and control wiring shall be terminated on different terminal blocks and shall not be intermixed. Grounding lugs for incoming ground wire shall be provided.

(b) The electric heating unit and components shall be qualified to ANSI/IEEE 323 and ANSI/IEEE 344. The units shall be qualified to operate at the specified environmental conditions, such as relative humidity, radiation dose, temperature, etc. Based on the heater qualification test results, the heater Manufacturer shall provide a recommended replacement schedule for any components that do not achieve the specified life conditions.

(c) Control and power wiring located in electric heating coil enclosures and terminal boxes shall be UL listed, certified to meet the vertical flame test per VW-1 per section 1080 of UL 1581 and marked with VW-1 on the wire insulation. Control and power wiring located in open trays shall be UL listed and certified to the ANSI/IEEE 383 flame test. Wiring shall be continuous between the terminal, with no splicing permitted. All wiring terminations for wire smaller than AWG No. 6 shall be made with crimp-type, preinsulated ring tongue, solderless terminal lugs. For AWG No. 6 and heavier wiring, pressure or clamp-type terminals shall be used. Insulation shall be the radiation resistant type. Spade-type quick-connect terminals may be used where required for component wiring.

(d) Terminal blocks shall be the molded phenolic type with screw-type terminals with barriers between the terminals. Pressure or clamp-type terminals are not acceptable except for AWG No. 6 and heavier wires.

(e) Fuse blocks shall be the molded phenolic type with reinforcement clips.

(f) A built-in, full capacity, safety, unfused disconnect switch or molded case switch shall be provided. The switch shall be designed so that the terminal box door cannot be opened unless the switch is in the off position.

(g) Contactors shall be of the full line-break magnetic disconnect type and shall be capable of holding without overheating within ±10% of the specified supply voltage.

(h) Elements shall have a maximum watt density of 45 W/in.^{2} (0.07 W/mm^2).

(i) Heating coils that are rated at more than 48 A shall be divided into circuits of not more than 48 A each.

CA-4428 Built-In Control Sequencers

(a) Silicon control rectifier (SCR) power controllers, when required, shall be solid state, utilizing zero voltage firing. They shall be able to vary the output from 0% to 100% with respect to the input signal.

(b) The SCR power controller shall be designed such that, when the thermostat or other external control leads are shorted or opened, the SCR is de-energized. All units operating at 480 V and above shall be equipped with transient/surge absorbers.

(c) Step controllers, when required, shall recycle to zero on loss of power. Each step shall have both on and off actuation points that are field adjustable at any point.

(d) When a pneumatic control signal is used, the range shall be specified in the design specification. On loss of pneumatic signal, the heater shall be deenergized.

CA-4429 Remote Control Panels

(a) The enclosure for remote controls shall be suitable for free standing or wall mounting, as required by the design specification. The enclosures shall be fabricated from stainless steel, galvanized steel, or painted carbon steel not less than 16 gauge. The enclosures shall be NEMA type 1, 4, 4X, 12, or 13. The device mounting panel for the remote control enclosure shall be stainless steel or painted carbon steel not less than 14 gauge. The carbon steel mounting panels shall be painted.

(b) Remote control enclosures shall meet the applicable requirements of CA-4427 and CA-4428. Additionally, control panels shall be equipped with a disconnect switch mechanically interlocked to the enclosure door in accordance with ANSI/NFPA 70 requirements. When the terminal box is separate from the remote control enclosure, it shall be provided with an integral switch set to disconnect the heater when the terminal box door is opened.

Copyright ASME International
Provided by IHS under license with ASME
No reproduction or networking permitted without license from IHS
Not for Resale

CA-4430 STRUCTURAL REQUIREMENTS FOR ELECTRIC HEATING COILS

CA-4431 General

Electric heating coils shall be designed in accordance with the structural requirements given in Article AA-4000. Structural requirements and load definitions specific to electric heating coils are given in CA-4133 through CA-4134.

CA-4432 Support Boundary for Electric Heating Coils

Electric heating coils may be supported as a unit (as part of an air handling housing) or line supported (as in an assembly inserted into a run of ductwork).

(a) Unit Supported Coils. The support boundary for the heater shall consist of the attachment and interface points between the air handling equipment housing and the heater.

(b) Line Supported (In-Duct) Heater Assembly. The support boundary for the heater shall consist of the interface flanges, control box attachment to ductwork, or other mechanical connections between the heater and ductwork that are designed to transfer all components of load across the joints.

(c) Documentation. The heater Manufacturer shall be responsible for specifying all information necessary to define the support boundary interfaces. This information shall include, but not necessarily be limited to:

(1) configuration, size, and type of support attachment required;

(2) magnitude and directions of all loads imposed on the anchorage points, including all static, dynamic, and operational loads resulting from the installed heater assembly. Loads shall be provided in a form that allows combinations to be considered as required in Article AA-4000.

(3) any information such as deflection limits or interface load requirements necessary to ensure that the heater can perform its required safety function under all design conditions.

Copyright ASME International
Provided by IHS under license with ASME
No reproduction or networking permitted without license from IHS
Not for Resale

ARTICLE CA-5000
INSPECTION AND TESTING

CA-5100 GENERAL REQUIREMENTS

CA-5110 INTRODUCTION

Examination, testing, and inspection shall be in accordance with Article AA-5000 and the requirements of this section.

CA-5200 TESTING OF WATER, STEAM, AND VOLATILE REFRIGERANT COILS

CA-5210 GENERAL REQUIREMENTS

There are two acceptable methods for coil performance verification. Method 1 is the minimum requirement of coil performance certification. Certified copies of the results of computerized coil selection programs shall be acceptable certification. Method 2 does not require testing of every coil size. When correlation between the test series and a coil selection program has been documented by a topical report or other means acceptable to the Owner or his designee, no additional performance testing is required. For coils in containment, such documentation shall include results of tests showing the effects on coil performance as a result of condensate flooding of the coil surfaces under accident conditions.

CA-5211 Performance Verification

The performance of air coils shall be verified by one of the following methods as determined from the design specification.

CA-5211.1 Method 1. The air coil rating shall have been derived from tests conducted in accordance with ASHRAE 33. The coil Manufacturer shall issue a coil certification or an ARI certification. In either case, the certification shall state:

(a) the coil capacity based on design parameters;

(b) the fouling factor used in the computation; and

(c) the coil data identified in ASHRAE 33, Section 8.2. A certification report shall be issued for each coil. For each model number coil, serial numbers shall be listed on the certification.

CA-5211.2 Method 2. A laboratory test on a prototype coil in accordance with ASHRAE 33 shall be conducted by the coil Manufacturer to determine performance ratings. The results of the test shall be documented in a test report. The report shall include:

(a) design conditions

(b) description of test method

(c) test procedure

(d) computation

(e) a statement of coil capacity

CA-5220 PRESSURE TESTING FOR WATER AND STEAM COILS

Components that comply with the ASME Code, Section III, shall be hydrostatically or pneumatically tested in accordance with the requirements of Section III, NC/ND-6000.

CA-5230 PRESSURE TESTING FOR VOLATILE REFRIGERANT COILS

All refrigerant coils shall be pneumatically tested for a minimum of 10 min at $1\frac{1}{2}$ times the maximum allowable pressure. The test shall be conducted under water. Any loss of pressure or visible air bubbles shall not be acceptable.

CA-5240 NONDESTRUCTIVE EXAMINATION

CA-5241 Material Examination

Coil tubing material shall be eddy current tested when required by the design specification. For water and steam coils designed and fabricated in accordance

Copyright ASME International
Provided by IHS under license with ASME
No reproduction or networking permitted without license from IHS
Not for Resale

with the ASME Code, this examination shall comply with the ASME Code, Section III, NC/ND-2510 and NC/ND-2552, and with Section V, Article 8 and Article 26, SE-243. For volatile refrigerant coils, ASTM E 243 shall be used.

CA-5242 Visual Examination of Brazed Joints

(a) For coils designed and fabricated in accordance with the ASME Code, brazed joints shall be visually inspected in accordance with AA-5200. Visual examination shall also comply with Section III, NC/ND-4540, NC/ND-5275, and NC/ND-5360, and with Section V, Article 9. Acceptance criteria shall be as given in NC/ND-5360.

(b) For non-ASME coils, brazed joints shall be inspected in accordance with AA-5200. To be acceptable, brazing metal shall give evidence of having flowed uniformly through a joint by the appearance of an uninterrupted, narrow, visible line of brazing alloy at the joint.

CA-5300 TESTING OF AIR WASHERS AND EVAPORATIVE COOLERS

CA-5310 GENERAL REQUIREMENTS

Performance testing of air washers or evaporative coolers shall be conducted at the factory in accordance with AA-5700 and Mandatory Appendix CA-II.

CA-5320 NONDESTRUCTIVE EXAMINATION

Nondestructive examination and inspection of air washers and evaporative coolers shall be conducted at the factory in accordance with Article AA-5000. Minimum acceptance criteria shall be in accordance with Article AA-6000.

CA-5400 TESTING OF ELECTRIC HEATING COILS

CA-5410 GENERAL REQUIREMENTS

Electric heating coils shall be inspected and tested to verify there are no defects in design or manufacture. Tests and inspections shall include, as a minimum, those indicated in this Subarticle. Test reports shall be furnished in accordance with CA-5500.

CA-5420 FUNCTIONAL TEST

Heaters with step controllers or SCRs, or both, shall be functionally tested by simulating a call for heat and verifying that these components function correctly.

CA-5430 DIELECTRIC WITHSTAND TEST

A 60 Hz potential in compliance with UL 1996 as indicated below shall be applied between high-voltage live parts and dead metal parts for a period of 1 min, except that the time of application of the potential may be reduced to 1 sec if the value of the test potential is 120% of the value shown below:

(a) 1000 V for heaters rated 250 V or less;

(b) 1000 V plus twice the rated voltage, or 2000 V, whichever is greater.

CA-5440 RESISTANCE TEST

(a) The resistance test shall be done with an ohmmeter calibrated by an approved vendor with standards traceable to the National Institute of Standards and Technology.

(b) The readings shall be taken from the load side of the device that energizes each stage of heater elements. On three-phase heaters, all legs shall be checked by reading from L1 to L2, L2 to L3, and L3 to L1.

(c) Resistance measured must be within 5% of the Manufacturer's design resistance for the specified application.

CA-5450 NONDESTRUCTIVE EXAMINATION

(a) The configuration and dimensions of the electric heating coils shall be in accordance with approved design drawings.

(b) Wiring shall be in accordance with approved wiring diagrams. Wire gages shall be suitable for heater amperage.

(c) Welds shall be visually inspected for pits, cracks, or other surface defects.

(d) The nameplate for compliance with heater ratings shall include kilowatts, voltage, phase, control voltage, and number of stages.

(e) Electrical connections shall be tight.

(f) Built-in components shall be verified as having proper ratings (voltage, amperage, etc.) for the intended purpose.

(g) Metal gages shall be checked with a calibrated micrometer for conformance to design drawings.

Copyright ASME International
Provided by IHS under license with ASME
No reproduction or networking permitted without license from IHS
Not for Resale

(h) Paint shall be checked for meeting the minimum thickness requirements, if applicable.

CA-5500 TEST REPORTS

Sufficient records shall be provided to show documentary evidence of all testing. Records shall include inspections and test reports, and shall show the date of inspection or test, the inspector or data recorder, the type of observation, and the results and their acceptability. Requirements and responsibilities for record transmittal, retention, and maintenance shall conform to those established by the design specification and CA-8120.

Copyright ASME International
Provided by IHS under license with ASME
No reproduction or networking permitted without license from IHS
Not for Resale

ARTICLE CA-6000
FABRICATION AND INSTALLATION

CA-6100 GENERAL REQUIREMENTS

CA-6110 INTRODUCTION

(a) Fabrication and installation shall be in accordance with Article AA-6000 and the specific requirements of this section.

(b) Welding and welding qualification shall be in accordance with AA-6300 and CA-6120. Brazing and brazing qualification shall be in accordance with AA-6400 and CA-6130. Mechanical joints shall be in accordance with AA-6250 and CA-6140.

CA-6120 WELDING

(a) Welding for pressure retaining components designed and fabricated in accordance with the ASME Code shall meet the requirements of Section III and of Section IX, Part QW.

(b) Welds and welded joints in coil frames designed and fabricated in accordance with the ASME Code, Section III, Subsection NF, shall meet the requirements of NF-3324.5, NF-4240, and NF-4300, and of Section IX, Part QW.

(c) Welding for air washers and evaporative coolers, and electric heating coils shall be in accordance with AA-6300.

CA-6130 BRAZING

Brazing for pressure retaining components designed and fabricated in accordance with the ASME Code shall meet the requirements of Section III and of Section IX, Part QB.

(a) Base metals shall be listed in Tables I-7.0 and I-8.0 of the Section III Appendices (for ASME Codes of Record prior to 1992) or Section II, Part D, Subpart 1, Tables 1A and 1B (for Codes of Record beginning with the 1992 edition). They shall also be listed under P-No. 101 and P-No. 107 in Section IX, QB-422. (For Codes of Record prior to the 1994 Addenda of the 1992 Edition) or QW/QB-422 (For Codes of Record beginning with the 1994 Addenda of the 1992 Edition).

(b) Filler metals shall be in accordance with the ASME Code, Section II, Part C, SFA-5.8, Classification BAg. Fluxes shall be AWS Type FB 3A or FB 3C, SAE Specifications AMS 3410 or 3411, or both.

(c) Fitting and joining of parts to be brazed shall be in accordance with the ASME Code, Section III, NC/ND-4530.

(d) Brazing procedure specifications shall conform to the rules for brazing listed in the ASME Code, Section III, NC/ND-4510, and in Section IX, Articles XI and XIV.

(e) Brazing qualifications shall conform to the ASME Code, Section III, NC/ND-4520, and Section IX, Articles XII and XIII.

(f) For examination of coils, see CA-5240.

CA-6140 MECHANICAL JOINING

(a) Bolts and bolted joints in coil frames designed and fabricated to the requirements of the ASME Code, Section III, Subsection NF, shall be in accordance with NF-3324.6 and NF-4700.

(b) Other coils shall comply with AA-4360.

(c) Mechanical joints for all equipment shall conform to the provisions of AA-6250.

CA-6200 CLEANING, FINISHING, AND COATING

CA-6210 CLEANING AND FINISHING

This subarticle covers the cleaning prior to surface preparation, coating, or painting. Surfaces shall meet the following requirements.

(a) Surfaces shall be free of particle contaminants such as sand, metal chips, weld slag, or weld spatter.

Copyright ASME International
Provided by IHS under license with ASME
No reproduction or networking permitted without license from IHS
Not for Resale

(b) All surfaces to be coated shall be clean and free from oil, grease, soil, dust, or foreign matter before further mechanical or chemical surface preparation. Solvent cleaning shall be in accordance with the requirements of SSPC-SP1. Halogen based materials or chlorinated degreasers shall not be used for surface preparation.

CA-6220 FINISHING AND SURFACE PREPARATION

(a) Surface preparation of metal surfaces located inside the containment building shall conform to the following requirements.

(1) All welds shall be continuous where feasible, free from sharp projections and spatters, and blended smoothly into the base metal. The surface shall be cleaned in accordance with SSPC-SP10, as appropriate. The abrasive shall be selected to produce an anchor pattern that is compatible with the substrate and the coating system used and acceptable to the coating manufacturer.

(2) All loose foreign material shall be removed. Crevices, gouges, deep pitting, and joints shall be filled, where required, with a suitable material compatible with the substrate and the coating system used.

(3) The primer shall be applied only to dry surfaces and shall be applied before the prepared surface rusts.

(4) Where special circumstances make it impractical to employ blasting, alternative methods of surface preparation may be used, provided the surface preparation is adequate for the coating system and the intended service.

(b) Surface preparation of metal surfaces located outside the containment building shall conform to the following requirements.

(1) All welds shall be continuous, free from spatter and sharp projections, and blended smoothly into the base metal.

(2) The minimum surface preparation shall be commercial blast cleaning as specified in SSPC-SP6 and to a visual degree of cleanness as described in SSPC-Vis 1.

(3) The abrasive shall be selected to produce an anchor pattern that is compatible with the coating system used and acceptable to the coating manufacturer.

(4) Where special circumstances make it impractical to employ blasting, alternative methods of surface preparation may be used, provided the surface preparation is adequate for the coating system and the intended service.

CA-6230 COATING AND APPLICATION

Coating and application shall be in accordance with the following requirements:

(a) Coating material mixing and thinning procedures shall conform to those outlined in SSPC-PA1 and to the recommendations of the coating manufacturer.

(b) Application equipment, its use, and its maintenance shall conform to the requirements of SSPC-PA1 and to the recommendations of the coating manufacturer.

(c) Coating materials and application equipment shall be suitable for the intended purpose and shall be maintained in satisfactory operating condition for the proper coating application.

(d) Application of coating shall conform to the requirements of SSPC-PA1 and to the recommendations of the coating manufacturer.

(e) The dry film thickness of each coat and of the entire coating system shall conform to the requirements of the project specification.

(f) No coating materials shall be applied to the coil heat transfer surfaces unless specifically required by the design specification.

(g) Quality assurance and quality control for coating materials, surface preparation, and coating application, including procedures and personnel qualifications necessary to provide specified documentation and adequate confidence that the coating work will satisfy service conditions, shall conform to the requirements of ASTM D 3843.

Copyright ASME International
Provided by IHS under license with ASME
No reproduction or networking permitted without license from IHS
Not for Resale

ARTICLE CA-7000
PACKAGING, SHIPPING, STORAGE, AND HANDLING

(03)

CA-7100 GENERAL REQUIREMENTS

CA-7110 INTRODUCTION

(a) Packaging, shipping, and storage requirements shall be in accordance with Article AA-7000, ASME NQA-1 Requirement 13 and the specific requirements of this article.

(b) When different levels of classification are required for different parts of the equipment, the Manufacturer's procedures shall state how this will be addressed. If the Owner has specific requirements, the design specification shall so state.

CA-7200 PACKAGING

CA-7210 EQUIPMENT REQUIREMENTS

(a) Water, steam, volatile refrigerant coils, air washers, and evaporative coolers shall meet the requirements of Packaging Level C of ASME NQA-1, Subpart 2.2, para. 300.

(b) Electric heating coils, control panels, and terminal boxes shall meet the requirements of Packaging Level B of ASME NQA-1, Subpart 2.2, para. 300.

CA-7300 SHIPPING

CA-7310 EQUIPMENT REQUIREMENTS

(a) Water, steam and volatile refrigerant coils, air washers, and evaporative coolers shall meet the requirements of Shipping Level C of ASME NQA-1, Subpart 2.2, para. 400.

(b) Electric heating coils, control panels, and terminal boxes shall meet the requirements of Shipping Level B of ASME NQA-1, Subpart 2.2, para. 400.

CA-7400 STORAGE

CA-7410 EQUIPMENT REQUIREMENTS

(a) Water, steam and volatile refrigerant coils, air washers, and evaporative coolers shall meet the requirements of Storage Level C of ASME NQA-1, Subpart 2.2, para. 600.

(b) Electric heating coils, control panels, and terminal boxes shall meet the requirements of Storage Level B of ASME NQA-1, Subpart 2.2, para. 600.

CA-7500 HANDLING

CA-7510 EQUIPMENT REQUIREMENTS

Handling and rigging requirements shall be in accordance with AA-6610 and the following:

(a) Water, steam and volatile refrigerant coils, air washers, and evaporative coolers shall meet the requirements of Handling Level C of ASME NQA-1, Subpart 2.2, para. 700.

(b) Electric heating coils, control panels, and terminal boxes shall meet the requirements of Handling Level B of ASME NQA-1, Subpart 2.2, para. 700.

Copyright ASME International
Provided by IHS under license with ASME
No reproduction or networking permitted without license from IHS
Not for Resale

ARTICLE CA-8000
QUALITY ASSURANCE

CA-8100 GENERAL REQUIREMENTS

CA-8110 INTRODUCTION

(a) Quality assurance comprises all those planned and systematic actions required to provide confidence that equipment will perform its required function. This applies to control of both materials and fabricated assemblies, and is applicable to both factory and field fabrication work. Quality control is a part of quality assurance by providing controls on the physical characteristics of components or materials to meet specified requirements.

(b) The organizations responsible for a project shall establish documented quality assurance programs in accordance with the requirements of Article AA-8000. A project includes design, fabrication, assembly, shipping, packaging, and storage; and the various organizations that will be involved in the steps of the project. The quality assurance program shall define the organizational structure within which the program is to be implemented. The program shall delineate the authority and responsibility of the persons and organizations involved in various activities affecting quality. Provision shall be made in the program for review and evaluation of its effectiveness. Correction of deficiencies shall be an integral part of the program.

CA-8120 DOCUMENTATION AND RETENTION

The lifetime and nonpermanent quality assurance records shall be in accordance with Tables CA-8120-1 and CA-8120-2.

(a) Water Coils. For coils designed and fabricated in accordance with the ASME Code, Section III, permanent and nonpermanent records shall be in conformance with ASME NQA-1 as amended by NCA-4134.17, and Tables NCA-4134.17-1 and NCA-4134.17-2. Documentation package requirements shall be as listed in the certified design specification.

(b) Steam and Volatile Refrigerant Coils, Evaporative Coolers, Air Washers, and Electric Heating Coils. For other equipment designed and fabricated in accordance with this Code, the provisions of the design specification shall identify the requirements for classification, retention of records, and facility storage. Such records as identified in Table CA-8120-1 shall be maintained as a minimum.

Copyright ASME International
Provided by IHS under license with ASME
No reproduction or networking permitted without license from IHS
Not for Resale

TABLE CA-8120-1
LIFETIME QUALITY ASSURANCE RECORDS

Record	Water, Steam, and Volatile Refrigerant Coil	Air Washers and Evaporative Coolers	Electric Heating Coils
1. Index to lifetime records	X	X	X
2. Design specification	X	X	X
3. Design calculations and drawings	X	X	X
4. As-built drawings	X	X	X
5. Certified material test reports (CMTR) and documentation providing traceability to location used, if required	X	X	X
6. Structural integrity test reports	X		
7. Final hydrostatic and pneumatic test results	X		
8. Final nondestructive examination reports	X		
9. Repair records when required by this Code	X		
10. Welding and brazing procedures	X	X	X
11. Factory test reports, as required		X	X
12. Environmental report			X

TABLE CA-8120-2
NONPERMANENT QUALITY ASSURANCE RECORDS

Record	Retention Period
1. QA program manual	3 years after superseded or invalidated
2. Design, procurement, and QA procedures	3 years after superseded or invalidated
3. Installation and NDE procedures	10 years after superseded or invalidated
4. Personnel qualification records	3 years after superseded or invalidated
5. Purchase orders	10 years after superseded or invalidated
6. Audit and survey reports	3 years after completion of report
7. Calibration records	Until recalibrated
8. Process sheets, travelers, or checklists	10 years after completion

Copyright ASME International
Provided by IHS under license with ASME
No reproduction or networking permitted without license from IHS
Not for Resale

ARTICLE CA-9000
NAMEPLATES AND RECORDS

CA-9100 GENERAL REQUIREMENTS

CA-9110 INTRODUCTION

Nameplates and stamping requirements shall meet the requirements of Article AA-9000, except as provided in this article.

CA-9200 COILS

CA-9210 GENERAL REQUIREMENTS

Coils that are designed and fabricated in accordance with the ASME Code, Section III, shall meet the requirements of Article NCA-8000 for nameplates, stamping, certification, and data reports.

CA-9300 INFORMATION ON NAMEPLATES

CA-9310 WATER, STEAM, AND VOLATILE REFRIGERANT COILS

In place of AA-9120, a permanent nameplate of noncorrosive metal shall be affixed to water, steam, and volatile refrigerant coils. The nameplate shall bear the following information:

(a) Manufacturer, model number, year manufactured
(b) total capacity, Btu/hr (kW)
(c) type of fluid
(d) fluid flow rate for water and steam coils
(e) item tag number, if furnished by the purchaser
(f) serial number
(g) type of refrigerant for volatile refrigerant coils

CA-9320 ELECTRIC HEATING COILS

(a) In place of AA-9120, electric heating coils shall be affixed with a permanent nameplate of noncorrosive material bearing, as a minimum, the following information:

(1) Manufacturer, model number, year manufactured
(2) capacity, kW
(3) item tag number, if furnished by the purchaser
(4) electrical characteristics, V/Phase/Hz
(5) serial number

(b) Contactor panels that are mounted remote from the heating coils shall be provided with the same nameplate data as the heating coil.

CA-9330 AIR WASHERS AND EVAPORATIVE COOLERS

In place of AA-9120, air washers and evaporative coolers shall be affixed with a permanent nameplate of noncorrosive material bearing, as a minimum, the following information:

(a) Manufacturer, model number, year manufactured
(b) serial number
(c) total capacity, Btu/hr (kW)
(d) airflow rate, standard ft^3/min (m^3/min)
(e) pump flow rate, gal/min (L/sec)
(f) electrical characteristics, V/Phase/Hz

CA-9400 NAMEPLATE LOCATION

CA-9410 VISIBILITY

In some cases, water, steam, and volatile refrigerant coils are installed inside of housings or ductwork. The nameplate will, therefore, not be visible without removal of a panel, or in some cases, removal of the coil from the housing. In these cases, the visibility requirement of AA-9140 does not apply.

Copyright ASME International
Provided by IHS under license with ASME
No reproduction or networking permitted without license from IHS
Not for Resale

CA-9500 DATA REPORTS

CA-9510 WATER AND STEAM COILS

(a) Coils designed, fabricated, and stamped in accordance with the ASME Code, Section III shall have an N-1 Code Data Report completed for each coil.

(b) For coils not stamped in accordance with the ASME Code, Section III, a Manufacturer's data report shall be provided in accordance with Mandatory Appendix CA-I, Form CA-IA.

CA-9520 VOLATILE REFRIGERANT COILS

For volatile refrigerant coils, a Manufacturer's data report shall be provided in accordance with Mandatory Appendix CA-I, Form CA-IB.

Copyright ASME International
Provided by IHS under license with ASME
No reproduction or networking permitted without license from IHS
Not for Resale

MANDATORY APPENDIX CA-I
MANUFACTURER'S DATA REPORTS

FORM CA-IA MANUFACTURER'S DATA REPORT FOR WATER AND STEAM COILS NOT STAMPED IN ACCORDANCE WITH THE ASME CODE, SECTION III

1. Manufactured and certified by _____ (Name and address)

2. Manufactured for _____ (Name and address of purchaser)

3. Location of installation _____ (Name and address)

4. Type _____ (Horiz. or vert.) _____ (Tank, jacketed, heat ex) _____ (Cert. holder's serial no.) _____ (CRN) _____ (Drawing no.) _____ (Nat'l. Bd. no.) _____ (Year built)

Items 5–11 inclusive to be completed for each coil.

5. Design pressure _____ (psi) at max. temp. _____ (°F) Min. pressure test temp. _____ (°F) Pneu., hydro. or comb. test pressure _____ (psi)

6. Header _____ (Mat'l. spec. no.) _____ [Dia. (in.)] _____ [Thickness (in.)] _____ [Type (Pipe or box)]

7. Tubes: _____ (Mat'l. spec. no.) _____ [OD (in.)] _____ [Thickness (inches or gage)] _____ (no.) _____ [Type (Straight or U)]

8. Fins _____ (Mat'l. spec. no.) _____ (Tensile strength) _____ [Nom. thickness (in.)] _____ [Min. design thickness (in.)] _____ [Fin spacing (FPI)]

9. Coil Casing _____ (Mat'l. spec. no.) _____ (Tensile strength) _____ [Nom. thickness (in.)] _____ [Min. design thickness (in.)]

10. Nozzles, inspection and safety valve openings:

Purpose (inlet, outlet, drain, etc.)	Quantity	Dia. or Size	Type	How Attached	Mat'l.	Thickness	Reinforcement Material	Location

11. Remarks: _____

Copyright ASME International
Provided by IHS under license with ASME
No reproduction or networking permitted without license from IHS
Not for Resale

FORM CA-IA MANUFACTURER'S DATA REPORT FOR WATER AND STEAM COILS NOT STAMPED IN ACCORDANCE WITH THE ASME CODE, SECTION III (CONT'D)

Mfr. Serial No. _____

CERTIFICATE OF SHOP COMPLIANCE

We certify that the statements made in this report are correct and that this nuclear vessel conforms to the rules for construction of AG-1.

Date _____, Name _____ (Id certificate holder) Signed _____ (representative)

CERTIFICATE OF SHOP INSPECTION

I, the undersigned _____ employed by _____ of _____ have inspected the component described in this data report on _____, and state that to the best of my knowledge and belief, the manufacturer has constructed this component in accordance with AG-1.

Date _____ Signed _____ (inspector)

Copyright ASME International
Provided by IHS under license with ASME
No reproduction or networking permitted without license from IHS
Not for Resale

FORM CA-IB MANUFACTURER'S DATA REPORT FOR VOLATILE REFRIGERANT COILS
(As Required by the Provisions of the ASME Code)

1. Manufactured and certified by _____ (Name and address)

2. Manufactured for _____ (Name and address of purchaser)

3. Location of installation _____ (Name and address)

4. Type _____ (Horiz. or vert.) _____ (Tank, jacketed, heat ex) _____ (Cert. holder's serial no.) _____ (CRN) _____ (Drawing no.) _____ (Nat'l. Bd. no.) _____ (Year built)

Items 5–13 inclusive to be completed for all volatiles refrigerant coils.

5. Headers _____ (Mat'l. spec. no.) _____ (Tensile strength) _____ [Nom. thickness (in.)] _____ [Min. design thickness (in.)] _____ [Dia. ID (ft & in.)]

6. Complete for all bolts used for coil casing to frame attachment:

   If removable, bolts used _____ (Matl. spec. no., size, quantity) Other fastening _____ (Describe or attach sketch)

7. Design pressure _____ (psi) at max. temp. _____ (°F) Min. pressure test temp. _____ (°F) Pneu., hydro. or comb. test pressure _____ (psi)

8. Tube Supports _____ (Stationary, mat'l. spec. no.) _____ [Dia. in. (subject to press.)] _____ [Thickness (in.)] _____ Attachment (welded, bolted)

9. Tubes _____ (Mat'l. spec. no.) _____ [OD (in.)] _____ [Thickness (inches or gage)] _____ (no.) _____ [Type (Straight or U)]

10. Fins _____ (Mat'l spec. no.) _____ (Tensile strength) _____ [Nom. thickness (in.)] _____ [Min. design thickness (in.)] _____ [Fin spacing (FPI)]

11. Coil Casing _____ (Mat'l. spec. no.) _____ (Tensile strength) _____ [Nom. thickness (in.)] _____ [Min. design thickness (in.)]

12. Constructed for max. allowable working pressure _____ psi at max. temp. _____ °F. Min. temp. (when less than −20°F) _____ °F. Hydrostatic, pnuematic, or combination test pressure _____ psi.

Copyright ASME International
Provided by IHS under license with ASME
No reproduction or networking permitted without license from IHS
Not for Resale

FORM CA-IB MANUFACTURER'S DATA REPORT FOR VOLATILE REFRIGERANT COILS (CONT'D)
(As Required by the Provisions of the ASME Code)

Mfr. Serial No. _____

13. Nozzles

Purpose (inlet, outlet, drain, etc.)	Quantity	Dia. or Size	Type	How Attached	Mat'l.	Thickness	Reinforcement Material	Location

14. Remarks: _____

CERTIFICATE OF SHOP COMPLIANCE

We certify that the statements made in this report are correct and that all details of design, material, construction, and workmanship of this vessel conform to AG-1.

Date _____ Signed _____ (manufacturer) by _____ (representative)

CERTIFICATE OF SHOP INSPECTION

I, the undersigned being a valid inspector employed by _____ have inspected the component described in this data report on _____, and state that to the best of my knowledge and belief, the manufacturer has constructed this component in accordance with AG-1.

Date _____ Signed _____

Copyright ASME International
Provided by IHS under license with ASME
No reproduction or networking permitted without license from IHS
Not for Resale

MANDATORY APPENDIX CA-II
FACTORY TESTING OF EVAPORATIVE COOLERS AND AIR WASHERS

ARTICLE CA-II-1000
INTRODUCTION

CA-II-1100 PURPOSE

The purpose of this procedure is to assure the performance of assembled evaporative coolers and air washers with respect to the design specification.

CA-II-1200 SCOPE

This procedure includes the test method and requirements for testing evaporative coolers and air washers.

CA-II-1300 RELATED DOCUMENTS

(a) AMCA 210
(b) ASHRAE 33
(c) ARI 430

Copyright ASME International
Provided by IHS under license with ASME
No reproduction or networking permitted without license from IHS
Not for Resale

ARTICLE CA-II-2000
INSTRUMENTS

CA-II-2100 TEMPERATURE MEASURING INSTRUMENTS

(a) psychrometers (mercury in glass)
  (1) sling
  (2) motorized
(b) mercury in glass thermometers
(c) thermocouples
(d) electric resistance thermometers
(e) recorder — two-pen-type measuring dry bulb and relative humidity

CA-II-2200 PRESSURE MEASURING INSTRUMENTS

(a) Bourdon tube gage
(b) manometer or draft gage
(c) mercury column or aneroid barometer

CA-II-2300 ELECTRIC INSTRUMENTS

(a) voltmeter
(b) ammeter
(c) wattmeter
(d) analyzer (containing all of the above and power factor)

CA-II-2400 OTHER INSTRUMENTS

(a) strobe light
(b) revolution counter
(c) stopwatch
(d) velometer (vane, propeller, electrical resistance type, or other similar item)
(e) pitot tube
(f) water flow meter or orifice

CA-II-2500 ACCURACY OF INSTRUMENTS

The accuracy of instruments shall be in accordance with ASHRAE 33, Section 4.

Copyright ASME International
Provided by IHS under license with ASME
No reproduction or networking permitted without license from IHS
Not for Resale

ARTICLE CA-II-3000
TEST SETUP

CA-II-3100 GENERAL REQUIREMENTS

The apparatus for the discharge measuring duct shall be assembled in accordance with AMCA 210. In order to follow this procedure, reasonably constant entering conditions, an electric power supply, an airflow measuring duct, a water supply, a means of water temperature measurement, electrical measuring instruments, and pressure measuring instruments shall be provided.

CA-II-3200 INSTRUMENT REQUIREMENTS

(a) A recorder shall be placed in the intake to measure the stability and to record the condition of the incoming air.

(b) Psychrometers shall be provided to measure the entering and leaving conditions of the air washer or evaporative cooler as shown in Fig. CA-II-3300.

(c) A thermometer shall be provided in the discharge of the pump to measure the nozzle supply water temperature.

(d) A thermometer shall be provided in the tank water at the eliminators to determine the temperature differential between the supply and return water.

(e) A pressure gage top shall be provided at the pump discharge to be used in determining pump discharge header.

(f) A pressure gage shall be located on each nozzle bank, as specified by the vendor, to represent the average nozzle head.

(g) A voltmeter shall be employed to measure the pump and fan voltages.

(h) An ammeter shall be employed to measure the pump and fan amperages.

(i) A means for measuring angular velocity for the pump and fan (strobe light, tachometer, stopwatch, and revolution counters) shall be provided.

(j) Average nozzle pressure shall be used to determine the flow from the pump. The vendor shall provide certified pressure and flow curves, by type, to establish the flow.

(k) A manometer and pitot tube shall be provided to measure static and velocity pressure. A draft gage shall be provided to measure pressure drops across the air washer and fan.

CA-II-3300 PREPARATION

(a) A layout of the measuring pattern on entering and leaving faces of the humidifying or spray chamber shall be provided.

(1) The width and height of the faces shall be divided into equal divisions.

(2) A grid of equal areas shall be constructed by connecting opposing division points.

(3) Measurement points shall be in the center of each area. The aspect ratio of the area shall not exceed 1:3.

(4) Measuring points shall be at a minimum of nine locations (see Fig. CA-II-3300).

(b) The pump and fan shall be connected to the electrical supply and jogged to observe that rotation is proper.

(c) Arranagements shall be completed for measuring intake and discharge conditions. Intake and discharge connections shall reasonably stimulate the site configuration, if known.

Copyright ASME International
Provided by IHS under license with ASME
No reproduction or networking permitted without license from IHS
Not for Resale

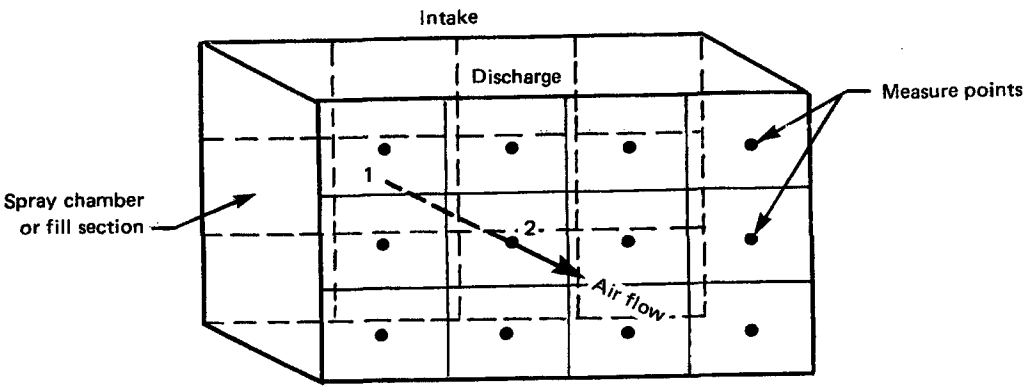

FIG. CA-II-3300 MEASURING POINTS

Copyright ASME International
Provided by IHS under license with ASME
No reproduction or networking permitted without license from IHS
Not for Resale

ARTICLE CA-II-4000
TESTING

CA-II-4100 TEST PROCEDURE

(a) The airflow through the apparatus shall be established with all equipment running: fan, pump, supply air equipment, and supply water equipment.

(b) The velocity and static pressures shall be measured at the traverse point.

(c) The pressure drop across the air washer and other air path components shall be measured.

(d) Psychrometric data at grid points shall be measured as follows.

(1) Dry bulb and wet bulb readings in the intake and discharge shall be read as quickly as possible at the same corresponding grid point (see Fig. CA-II-3300).

(2) The saturation efficiency shall be calculated from the average of the wet and dry bulb temperatures taken at the grid points.

(e) The velocity at each grid point shall be measured during the air test phase.

(f) The water temperatures at the beginning and at the completion of the grid point readings shall be measured at the locations shown in (1) and (2) below, to establish agreement with the record and to establish stability during readings:

(1) supply at pump discharge

(2) tank at eliminators

(g) The following readings shall be recorded before and after the psychrometric traverse:

(1) pump discharge pressure

(2) standpipe pressure

(3) flow at pump discharge or nozzle pressure

(h) The electrical measurements on the pump shall be recorded as follows:

(1) voltage

(2) amperage

(3) rpm, if accessible

CA-II-4200 ACCEPTANCE

(a) There shall not be any water drops coming from the top and side blanks on the discharge side of the eliminators.

(b) A light beam shall not indicate heavy fog in the airstream at the design wet bulb depression. Fog can be present with high humidity in the intake.

(c) Surfaces and leading edges of equipment in the leaving airstream shall not be wet.

(d) The velocity distribution of the air shall be within ±10% of nominal design air velocity.

(e) Using the apparatus vendor's documented test data, test performance must extrapolate to the design parameters in order to be accepted.

Copyright ASME International
Provided by IHS under license with ASME
No reproduction or networking permitted without license from IHS
Not for Resale

ARTICLE CA-II-5000
TEST REPORTS

CA-II-5100 ITEMS TO BE INCLUDED

The following items are to be included in test reports:

(a) velocity pressures corrected for density, using AMCA 210 calculation, mathematical models, and charts

(b) air quantities calculated from velocities and duct area

(c) pressure drop across the washer

(d) the saturation efficiency from the psychrometric data

(e) pump flow, head, and horsepower, plus all electrical data, such as amperage, voltage, power factor, and wattage

(f) the intake recorder charts marked for each test run

(g) a chart showing distribution at the grid points

(h) acceptance of leaving air conditions such as carryover, leakage, and wetted surfaces

(i) performance of heat transfer

(1) entering and leaving water temperatures

(2) heat load calculations

Copyright ASME International
Provided by IHS under license with ASME
No reproduction or networking permitted without license from IHS
Not for Resale

NONMANDATORY APPENDIX CA-A
DIVISION OF RESPONSIBILITY

This Nonmandatory Appendix is intended to identify the roles normally assumed by the organizations responsible for fulfilling Code requirements when not specifically addressed in an article or subarticle. These are guidelines to assist with Code compliance and are not to be construed as legal or contractual responsibilities unless so invoked by the Owner or designee.

TABLE CA-A-1000
DIVISION OF RESPONSIBILITY

CA-	Item	Responsible Party
3000	Material selection	Owner or designee
3500	Certification of materials	Manufacturer
4100	Design conditions for coils	Owner or designee
4121	Code stamping Code class	Manufacturer Owner or designee
4124	Nozzle loading conditions	Owner or designee
4125	Fin spacing	Owner or designee
4130	Coil design verification report	Manufacturer
4200	Design conditions for volatile refrigerant coils	Owner or designee
4222	Tube design pressure	Owner or designee
4300	Design conditions for air washers and evaporative coolers	Owner or designee
4321	Air washer and evaporative cooler design verification report	Manufacturer
4322	Access doors	Owner or designee
4323	Air velocity and pressure drop	Owner or designee
4324	Fill media	Manufacturer
4326	Cleanout provisions	Owner or designee
4328	Electrical wiring	Manufacturer
4400	Design conditions for electric heating coils	Owner or designee
4421	Electric heating coil design verification report	Manufacturer
4422	Element design	Owner or designee
4423	Frame design	Owner or designee
4426	Terminal box enclosure	Owner or designee

Copyright ASME International
Provided by IHS under license with ASME
No reproduction or networking permitted without license from IHS
Not for Resale

TABLE CA-A-1000
DIVISION OF RESPONSIBILITY (CONT'D)

CA-	Item	Responsible Party
4427	IEEE qualification	Manufacturer
4428	Controller type	Owner or designee
4429	Remote control panel enclosure requirements	Owner or designee
5210	Coil performance verification method	Owner or designee
5211	Performance verification for coils	Manufacturer
5230	Coil pressure tests required	Owner or designee
5240	Nondestructive examination	Owner or designee
5300	Performance test report for air washers and evaporative coolers	Manufacturer
5400	Electric heating coil tests required	Owner or designee
5450	Nondestructive testing report	Manufacturer
5500	Test report	Manufacturer
6100	Welding, brazing, coating, and installation procedures	Manufacturer
7100	Equipment classifications	Owner or designee
8000	Quality assurance program	Manufacturer
8120	Documentation requirements	Owner or designee
9000	Nameplate	Manufacturer

Copyright ASME International
Provided by IHS under license with ASME
No reproduction or networking permitted without license from IHS
Not for Resale

NONMANDATORY APPENDIX CA-B
DESIGN RECOMMENDATIONS

ARTICLE CA-B-1000
RECOMMENDED DESIGN CRITERIA FOR AIR WASHERS AND EVAPORATIVE COOLERS

CA-B-1100 INTRODUCTION

CA-B-1110 SCOPE

The system design parameters, features, or specifications given in this article are recommended for use in air washers or evaporative cooler design.

CA-B-1200 GENERAL

CA-B-1210 RECOMMENDATIONS

(a) Standard velocity eliminators, which are formed by flat, broken, parallel sheets of material, shall be applied at nominal mean velocities through the face of the eliminator area from 300 ft/min to a maximum of 600 ft/min.

(b) High velocity eliminators, which are formed by parallel sheets of nonflat material, shall be applied at nominal face velocities from 600 ft/min to 1500 ft/min.

(c) Maximum face velocity for fill-type evaporative coolers is 500 ft/min.

(d) Eliminators are to be contained in a holding case that permits cleaning maintenance without disassembly of the entire eliminator module or section.

(e) Location of spray banks relative to an eliminator face and to each other is to be in accordance with the minimum dimensions shown in Fig. CA-B-1210 and Table CA-B-1210.

(f) Nominal water spray density will be 8 to 10 gal/min per 1000 ft^3/min of air capacity for air washers that are equipped with standard velocity eliminators.

(g) Nominal water spray density for air washers equipped with high velocity eliminators will be 6 to 10 gal/min per 1000 ft^3/min of air capacity.

(h) Nominal water supply density for fill-type evaporative coolers will be in accordance with the Manufacturer's recommendations for design conditions.

(i) Drainage channels or gutters are to be located above and beside the air entrance opening to the eliminator section on air washers that are equipped with high velocity eliminators.

(j) A water surface dam that extends approximately 2 in. above and below the water surface and across the entrance to the eliminator section should be used on air washers that are equipped with high velocity eliminators.

(k) Air washers are to be equipped with discharge blanks or scum covers on the air exhaust side of the eliminator section.

(l) Balancing cocks or valves are to be used to obtain the desired flow distribution between or among spray banks.

(m) Tank drains and floor drains are to be located lower in elevation than the lowest points in the tank and floor.

(n) An overflow drain is to be used in the air washer tank.

(o) All areas of an air washer spray chamber should be accessible without disturbing major components, piping, or other similar items.

(p) The exhaust plenum of a draw-through air washer is to be of sufficient size to permit the placement of the fan inlet $1\frac{1}{2}$ fan wheel diameters from the discharge surface of the eliminator.

(q) The header for each spray bank is to be equipped with a pressure gage.

(r) The piping for each circulation pump is to be equipped with pressure gages to reflect total pump head.

(s) The operating level of the water will be controlled by a float valve on the makeup water line. A weir or an overflow pipe will be provided in the tank to provide ample drainage capacity in the event of valve, float, or piping failure.

(t) Structural bracing for standpipes will be located out of the water spray pattern.

(u) Spray nozzles will be supplied with pressure volume flow curves.

Copyright ASME International
Provided by IHS under license with ASME
No reproduction or networking permitted without license from IHS
Not for Resale

TABLE CA-B-1210

Height of Eliminator Section, in.	Standard Velocity		High Velocity	
	a, Min. [Note (1)]	*b*, Min. [Note (1)]	*a*, Min. [Note (1)]	*b*, Min. [Note (1)]
40	12	36	42	18
60	12	36	56	18
80	12	36	65	18
100	12	36	80	18

NOTE:
(1) Dimensions are shown in Fig. CA-B-1210.

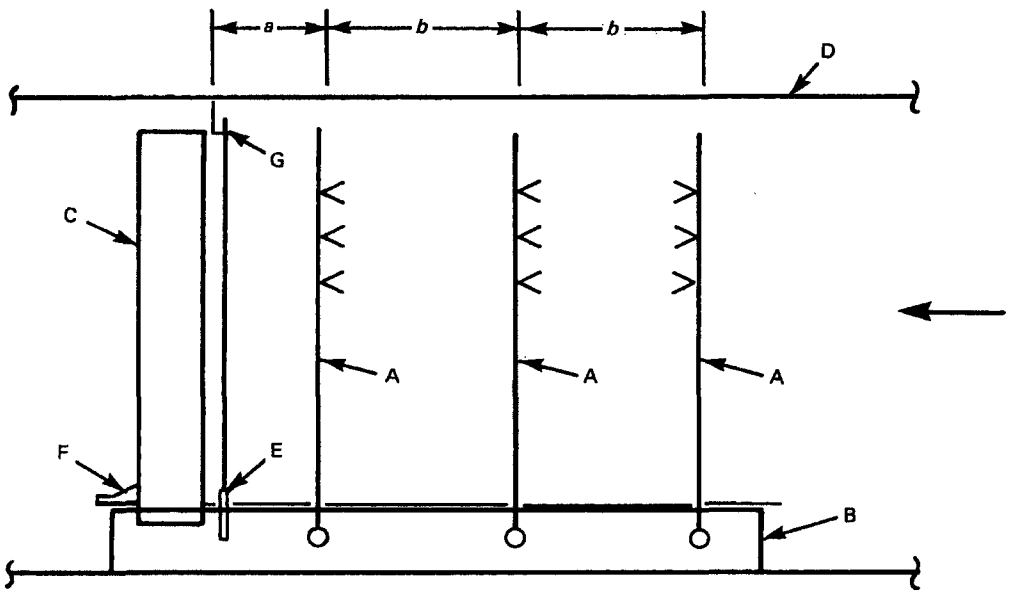

A = Standpipes
B = Tank
C = Eliminator section
D = Ceiling
E = Surface dam
F = Discharge blank
G = Drainage channels

FIG. CA-B-1210 SIDE ELEVATION OF AIR WASHER SPRAY CHAMBER
(High Velocity Illustrated)

Copyright ASME International
Provided by IHS under license with ASME
No reproduction or networking permitted without license from IHS
Not for Resale

ARTICLE CA-B-2000
RECOMMENDED DESIGN CRITERIA FOR WATER, STEAM, AND VOLATILE REFRIGERANT COILS

CA-B-2100 INTRODUCTION

CA-B-2110 SCOPE

The system design parameters, features, or specifications given in this article are recommended for water, steam, and volatile refrigerant coils.

CA-B-2200 GENERAL

CA-B-2210 RECOMMENDATIONS

(a) A water analysis should be provided to the coil Manufacturer when nondemineralized water is used for heating or cooling.

(b) Air-side velocity for cooling coils should not exceed 500 ft/min (2.54 m/s).

(c) Air-side velocity for heating coils should not exceed 800 ft/min (4.06 m/s).

(d) Tube wall thickness for water and steam coils should not be less than 0.035 in. (0.90 mm).

(e) Unsupported tube lengths should not exceed 4 ft (1.22 m).

(f) A corrosion allowance of $^1/_{16}$ in. (1.6 mm) should be required for steel tube headers of water and steam coils.

(g) Fin spacing should not exceed 10 fins per inch (mm) of tube length.

Copyright ASME International
Provided by IHS under license with ASME
No reproduction or networking permitted without license from IHS
Not for Resale

SECTION FA
MOISTURE SEPARATORS

FA-1000	**Introduction**	325
FA-1100	Scope	325
FA-2000	**Referenced Documents**	326
FA-3000	**Materials**	327
FA-3100	Allowable Materials	327
FA-3200	Limits	327
FA-3300	Material Certification	327
FA-4000	**Design Conditions**	328
FA-4100	General Design	328
FA-4200	Technical Requirements	328
FA-4300	Structural Requirements	328
FA-5000	**Inspection and Testing**	330
FA-5100	Qualification Tests	330
FA-5200	Production Inspection and Testing	330
FA-6000	**Fabrication**	332
FA-6100	Repairs	332
FA-6200	Cleaning	332
FA-7000	**Packaging and Shipping**	333
FA-7100	Packaging	333
FA-7200	Loading for Shipment	333
FA-7300	Storage	333
FA-8000	**Quality Assurance**	334
FA-8100	Documentation	334
FA-9000	**Nameplates**	335

Copyright ASME International
Provided by IHS under license with ASME
No reproduction or networking permitted without license from IHS
Not for Resale

Table

FA-4210 Moisture Separator Performance 329

Nonmandatory Appendices

FA-A Moisture Separator Configuration 336
FA-B Division of Responsibility 337

Copyright ASME International
Provided by IHS under license with ASME
No reproduction or networking permitted without license from IHS
Not for Resale

ARTICLE FA-1000
INTRODUCTION

FA-1100 SCOPE

This section of the Code provides requirements for the performance, design, construction, acceptance testing, and quality assurance for moisture separators used in air and gas cleaning systems in nuclear safety-related air or gas treatment systems.

FA-1110 PURPOSE

The purpose of this Code is to assure that moisture separators used in nuclear safety-related air and gas treatment systems are acceptable in all aspects of performance, design, construction, and testing.

FA-1120 APPLICABILITY

This section applies to modular, impingement-type liquid droplet separators which typically employ layers of fibers, layers of mesh, or alternating layers of each. This section does not include the integration of the moisture separators into a complete air cleaning system. It only applies to moisture separators ready for installation in air cleaning systems.

FA-1130 DEFINITIONS AND TERMS

The following terms have special meaning in the context of this section:

frame: structure used to contain and support a pad.

moisture separator: a modular unit consisting of a deep bed fibrous pad enclosed in a frame used to remove entrained liquid droplets from air or gas.

pad: a porous structure composed of one or more layers of randomly oriented packed fiber beds of graded density glass, metal, or other refractory fibers and/or layers of graded density knitted, coiled, or woven refractory fiber mesh.

penetration: concentration of entrained liquid droplets exiting from a moisture separator expressed as percentage of inlet concentration.

Copyright ASME International
Provided by IHS under license with ASME
No reproduction or networking permitted without license from IHS
Not for Resale

ARTICLE FA-2000
REFERENCED DOCUMENTS

ASME NQA-1, Quality Assurance Program Requirements for Nuclear Facilities

ASME NQA-2, Quality Assurance Requirements for Nuclear Power Plants

Publisher: American Society of Mechanical Engineers (ASME International), Three Park Avenue, New York, NY 10016-5990; Order Department: 22 Law Drive, Box 2300, Fairfield, NJ 07007-2300

ASTM A 240, Specification for Heat Resisting Chromium and Chromium-Nickel Stainless Steel Plate, Sheet, and Strip for Fusion-Welded Unfired Pressure Vessels

ASTM A 380, Standard Practice for Cleaning and Descaling Stainless Steel Parts, Equipment, and Systems

ASTM D 1056, Specification for Flexible Cellular Materials — Sponge or Expanded Rubber

Publisher: American Society for Testing and Materials (ASTM), 100 Barr Harbor Drive, West Conshohocken, PA 19428-2959

UL 900-87, Test Performance of Air Filter Unit

Publisher: Underwriters Laboratories, Inc. (UL), 333 Pfingsten Road, Northbrook, IL 60062-2096

Copyright ASME International
Provided by IHS under license with ASME
No reproduction or networking permitted without license from IHS
Not for Resale

ARTICLE FA-3000
MATERIALS

FA-3100 ALLOWABLE MATERIALS

adhesive: adhesive used to splice gaskets or to fasten gasket to cell shall be compatible with gasket material and appropriate to intended application.

frames, cross-grids, and supports: material shall meet the requirements of ASTM A 240, Type 304, stainless steel or as required to meet design conditions.

gaskets: the material for these parts shall be closed cell silicone rubber sponge, Grade SCE-43-1 or SCE-44-1, in accordance with ASTM D 1056.

pads: the pad is usually constructed of glass fiber and/or corrosion resistant (stainless steel) wire. Other materials that have demonstrated equal or better corrosion resistance are allowable if they meet the requirements of UL 900, Class 1 filters and the design conditions.

rivets: when rivets are used for fabrication or attachment they shall be 300 series austenitic steel meeting the minimum requirements of ASTM A 581, Type 303.

FA-3200 LIMITS

Materials of construction specified here for the moisture separator are typical. Alternative materials are acceptable as long as they meet the design conditions, UL 900, Class 1 filter requirements and pass the qualification test of Article FA-5000.

FA-3300 MATERIAL CERTIFICATION

The Manufacturer shall supply certification to the purchaser that all materials used in fabrication of the moisture separator conform to the requirements of FA-3200.

Copyright ASME International
Provided by IHS under license with ASME
No reproduction or networking permitted without license from IHS
Not for Resale

ARTICLE FA-4000
DESIGN CONDITIONS

Design conditions for moisture separators are a maximum relative humidity of 100%, operating temperature of up to 285°F (141°C), and a total integrated radiation environment of 8×10^7 rads unless otherwise specified in the design specifications.

FA-4100 GENERAL DESIGN

Moisture separators shall consist of frames designed to retain the deep bed fibrous pads. The pad shall be held in place in the frame by a retaining grid(s) or mechanism. Frames shall be designed to include drain holes to prevent reentrainment of trapped liquids. Seals shall be provided as necessary to prevent bypass of entrained liquid droplets. Refer to Nonmandatory Appendix FA-A for a typical configuration.

FA-4200 TECHNICAL REQUIREMENTS

FA-4210 DESIGN REQUIREMENTS

The moisture separator shall meet the requirements given in Table FA-4210.

FA-4220 PAD

The pad shall be fabricated of approved material (FA-3100). Fabrication of the pad shall be controlled so as to provide the required pad density.

FA-4230 MOISTURE SEPARATOR ASSEMBLY

The frame shall be fabricated from corrosion resistant nonperforated steel sheet and shall be formed and assembled in a manner that no bypssing of the separator pad is possible. Drain holes shall be provided in the bottom of the frame. Design shall include provisions to assure that the pad is maintained in its operating position and that the pad does not settle, pack down, or pull away from the top or sides of the frame when installed.

FA-4300 STRUCTURAL REQUIREMENTS

FA-4310 GENERAL

The moisture separators shall be designed in accordance with the structural requirements given in Article AA-4000 or qualified by test in accordance with AA-4350 or FA-5210.

FA-4320 LOAD DEFINITION

Loads to be considered in the structural design of the moisture separator defined in AA-4211 are as follows:

(a) Deadweight (DW) consists of the metal frame that contains the pad, and bolting integral to the moisture separator. Instrumentation and ancillary equipment attached to the moisture separator are treated as external loads (EL).

(b) The pressure (NOPD) differential which must be considered is from the upstream to downstream side of the pad.

(c) The seismic acceleration and response spectra (OBE and SSE) shall be as provided in the design specification. Additional dynamic loads (ADL) will also be provided by the design specification as applicable.

Copyright ASME International
Provided by IHS under license with ASME
No reproduction or networking permitted without license from IHS
Not for Resale

TABLE FA-4210
MOISTURE SEPARATOR PERFORMANCE

Airflow Rating	
Rated flow shall be the range of flow rates at which the separator has been shown to meet the required efficiency (*see below*).	
Pressure Ratings (at rated flow)	
Maximum pressure drop (clean, dry)	1.0 in. wg (25 mm wg)
Maximum pressure drop [clean, wet (at Moisture Removal Capacity)]	2.0 in. wg (51 mm wg)
Minimum Burst Pressure	20.0 in. wg (508 mm wg)
Moisture Removal Capacity (water in air)	2.0 lb per 1000 cfm (32 g per ^{3}/min)
Moisture Removal Efficiency (at rated flow and capacity)	
Removal efficiency of entrained water	99% by weight (min.)
Removal efficiency of 5 to 10 θm diameter droplets	99% by count (min.)

FA-4330 LOAD COMBINATIONS

Unless stated otherwise in the design specification, the applicable loading conditions noted in Table AA-4212 for moisture separators are as follows:

(a) Service Level A — DW + EL + NOPD

(b) Service Level B — DW + EL + NOPD + OBE

(c) Service Level C — DW + EL + NOPD + SSE + ADL

(d) Service Level D — not applicable

FA-4340 ACCEPTANCE CRITERIA

The acceptance criteria are listed in Table AA-4321. The design stress values S shall be $0.6S_y$.

Copyright ASME International
Provided by IHS under license with ASME
No reproduction or networking permitted without license from IHS
Not for Resale

ARTICLE FA-5000
INSPECTION AND TESTING

Inspection and testing of the moisture separator shall conform to requirements of this section and to specific requirements set forth in Article AA-5000.

FA-5100 QUALIFICATION TESTS

A design qualification test shall be performed on each specific moisture separator design. Four units of each design shall be tested to all requirements of FA-5200. New or revised designs shall require requalification.

FA-5200 PRODUCTION INSPECTION AND TESTING

Each moisture separator to be delivered to the purchaser shall be inspected and tested in accordance with this section.

FA-5210 DIMENSIONAL INSPECTION

Overall dimensions shall be inspected to determine conformity to drawing requirements. Each moisture separator shall be inspected to ensure that it conforms to all dimensional requirements of its design. Any components which will be "hidden" in the final assembly shall be inspected prior to assembly. Measurements of the pad depth and density shall be made to determine that it conforms to design requirements. Location and placement stiffeners and supports shall be inspected to determine conformance to drawing requirements.

FA-5220 WELDING INSPECTION

FA-5221 Spot Welds

Spot welds shall be inspected visually in accordance with AA-6332.

FA-5222 Seal Welds

Seal welds shall be inspected visually in accordance with AA-6331.

FA-5223 Fillet Welds

Fillet welds shall be inspected visually in accordance with AA-6331.

FA-5230 MOISTURE SEPARATOR AIRFLOW RESISTANCE TEST

With the moisture separator oriented in a test tunnel in its service orientation and operating at its rated airflow, the pressure differential across the separator shall not exceed the maximum pressure drop rating in Table FA-4210 for the clean, dry condition.

FA-5240 MOISTURE SEPARATOR ROUGH HANDLING QUALIFICATIONS

Four moisture separators shall be selected at random, hard-mounted to a rough-handling machine with sharp cutoff cams in the service orientation (FA-4100), and vibrated for 10 min at a frequency of 200 cycles per min at an amplitude of 0.75 in. (19 mm). There shall be no settling of the mesh pad and no broken welds or other physical damage as a result of the rough handling.

Copyright ASME International
Provided by IHS under license with ASME
No reproduction or networking permitted without license from IHS
Not for Resale

FA-5250 MOISTURE SEPARATOR AIRFLOW RESISTANCE TEST

Each of the four separators subjected to the rough handling test shall be individually mounted in a test tunnel in its service orientation and operated at its rated airflow. The pressure differential across the separator shall not exceed the ratings in Table FA-4210 for the clean dry condition and clean wet condition. The separator shall also demonstrate that it can withstand the minimum burst pressure differential given in Table FA-4210 without any visible physical damage or change in pressure drop (clean) at rated flow.

FA-5260 MOISTURE SEPARATOR PERFORMANCE TEST

After successfully meeting the requirements of FA-5220, the four separators subjected to the rough handling test shall be tested to demonstrate compliance with the moisture removal and efficiency requirements of Table FA-4210.

Copyright ASME International
Provided by IHS under license with ASME
No reproduction or networking permitted without license from IHS
Not for Resale

ARTICLE FA-6000
FABRICATION

The moisture separators shall be fabricated using only those materials designated in Article FA-3000 and in accordance with the design outlined in Article FA-4000. All welding shall be in accordance with AA-6300. After manufacture, the units shall be tested and inspected in accordance with Article FA-5000.

FA-6100 REPAIRS

All welds shall be repaired in accordance with Article AA-6000. Damaged materials shall be replaced.

FA-6200 CLEANING

Metal parts of the moisture separator shall be cleaned and degreased in accordance with ASTM A 380 before any welding.

Copyright ASME International
Provided by IHS under license with ASME
No reproduction or networking permitted without license from IHS
Not for Resale

ARTICLE FA-7000
PACKAGING AND SHIPPING

FA-7100 PACKAGING

Each moisture separator shall be individually wrapped and enclosed in a wood or heavy corrugated paperboard carton with internal cushioning to decouple shock and vibration under accelerations up to 50 g. Separators shall be oriented in the carton or crate with the top of the frame up. The cartons or crates shall be clearly marked with the legend "This Side Up" or a similar imprint to ensure proper orientation of cartons and crates during handling, shipping, and storage.

FA-7200 LOADING FOR SHIPMENT

Cartons shall be banded to skids or pallets in the orientation specified in FA-7100. Wood separators and strapping protectors shall be provided between tiers of cartons and above the topmost cartons in the load. Sufficient steel strapping shall be used to prevent shifting of the load on the skid or pallet. Separators shall not be stacked higher than three cartons on a skid or pallet. Skids shall not be stacked more than two high unless bracing is provided to support the upper tiers to prevent damage to the bottom separators.

FA-7300 STORAGE

Storage shall be in accordance with ASME NQA-2, Part 2.2, level C.

Copyright ASME International
Provided by IHS under license with ASME
No reproduction or networking permitted without license from IHS
Not for Resale

ARTICLE FA-8000
QUALITY ASSURANCE

The moisture separator manufacturer shall establish and comply with a comprehensive quality assurance program and plan in accordance with Article AA-8000.

FA-8100 DOCUMENTATION

The following documentation shall be provided to the purchaser:

(a) drawing giving outline and interface dimensions of the separator

(b) list of materials of construction

(c) the following production test reports

(1) qualification reports; (seismic)

(2) certification of performance (resistance and performance tests)

(d) installation and maintenance instructions

(e) storage and handling instructions

Copyright ASME International
Provided by IHS under license with ASME
No reproduction or networking permitted without license from IHS
Not for Resale

ARTICLE FA-9000
NAMEPLATES

Each separator shall have a nameplate permanently attached to the top or side of the frame with the following information:

(a) moisture separator

(b) manufacturer's name or symbol

(c) weight of separator

(d) pressure drop across separator (clean) at airflow velocity specified

(e) serial number (each separator shall be identified by a nonrecurring alphanumeric symbol, which shall also identify all documentation for the separator)

(f) direction of flow

(g) mounting orientation

Copyright ASME International
Provided by IHS under license with ASME
No reproduction or networking permitted without license from IHS
Not for Resale

NONMANDATORY APPENDIX FA-A
MOISTURE SEPARATOR CONFIGURATION

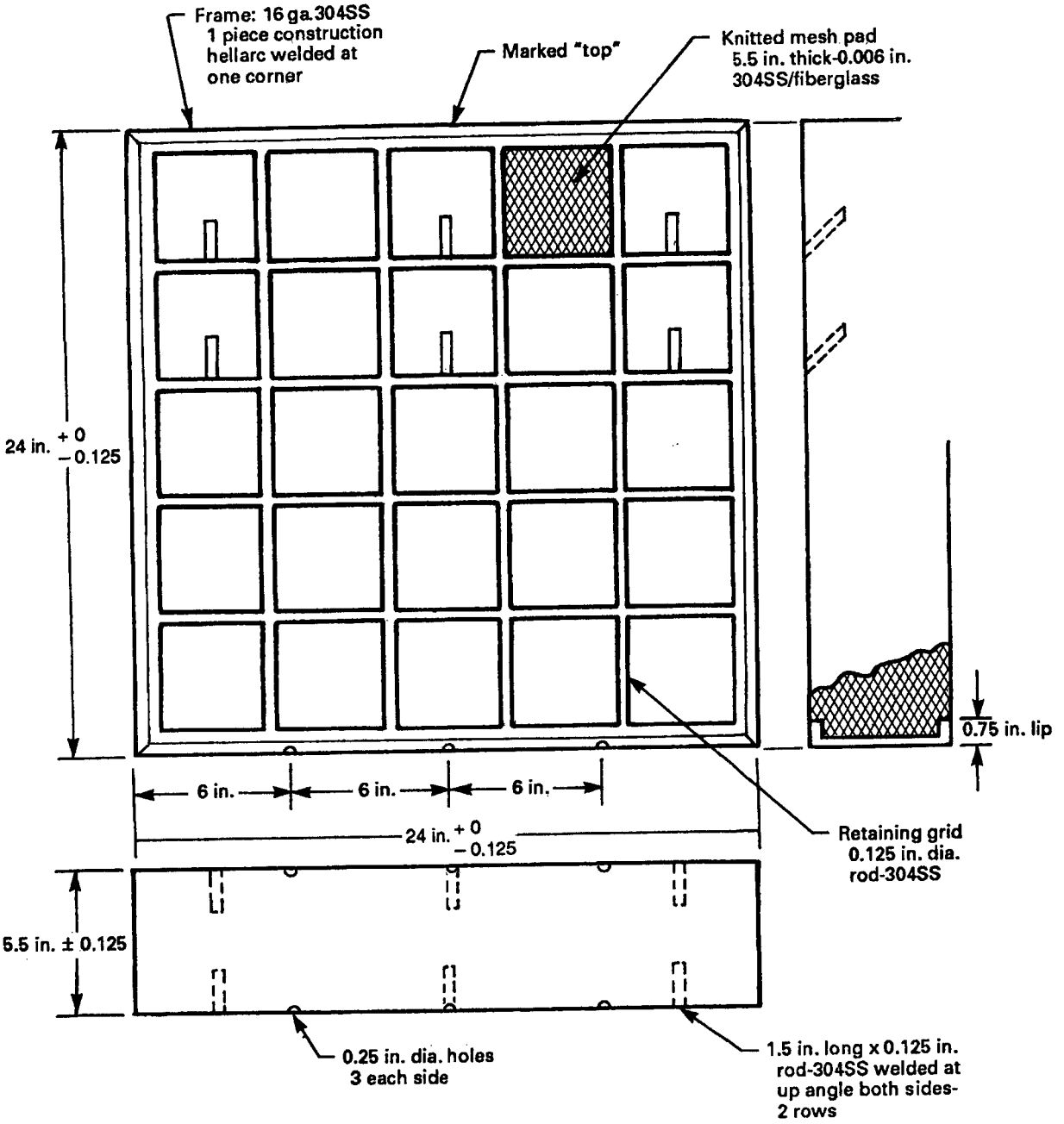

FIG. FA-A-1000 MOISTURE SEPARATOR CONFIGURATION

Copyright ASME International
Provided by IHS under license with ASME
No reproduction or networking permitted without license from IHS
Not for Resale

NONMANDATORY APPENDIX FA-B
DIVISION OF RESPONSIBILITY

This Nonmandatory Appendix is intended to identify the roles normally assumed by the organizations responsible for fulfilling Code requirements when not specifically addressed in an article or subarticle. These are guidelines to assist with Code compliance and are not to be construed as legal or contractual responsibilities unless so invoked by the Owner or designee.

TABLE FA-B-1000
DIVISION OF RESPONSIBILITY

FA-	Item	Responsible Party
3000	Materials	Engineer/Manufacturer
4000	Design conditions	Engineer
4210	Design requirements	Manufacturer
4220	Pad	Manufacturer
4230	Mesh pad frame and assembly	Manufacturer
4240	Seismic	Engineer/Manufacturer
5000	Inspection and testing	Engineer/Manufacturer
6000	Fabrication	Manufacturer
7100	Packaging	Manufacturer
7200	Loading for shipment	Manufacturer
7300	Storage	Manufacturer/Owner
8000	Quality assurance	Manufacturer
9000	Nameplates	Manufacturer

Copyright ASME International
Provided by IHS under license with ASME
No reproduction or networking permitted without license from IHS
Not for Resale

(03)

SECTION FB
MEDIUM EFFICIENCY FILTERS

FB-1000	**Introduction**	340
FB-1100	Scope	340
FB-2000	**Referenced Documents**	341
FB-3000	**Materials**	342
FB-3100	Allowable Materials	342
FB-3200	Special Limitations of Materials	342
FB-4000	**Design**	343
FB-4100	General Design	343
FB-4200	Design Criteria	343
FB-4300	Structural Requirements	343
FB-5000	**Inspection and Testing**	344
FB-5100	Inspection Plan	344
FB-5200	Qualification Testing	344
FB-6000	**Fabrication**	346
FB-6100	General	346
FB-6200	Manufacture and Assembly	346
FB-7000	**Packaging, Shipping, Receiving, Storage, and Handling**	347
FB-7100	General	347
FB-8000	**Quality Assurance**	348
FB-8100	General	348
FB-8200	Documentation	348

Copyright ASME International
Provided by IHS under license with ASME
No reproduction or networking permitted without license from IHS
Not for Resale

FB-9000 **Labels and Marking** 349
FB-9100 Filter Markings 349
FB-9200 Package Marking 349

Nonmandatory Appendix
FB-A Division of Responsibility 350

Copyright ASME International
Provided by IHS under license with ASME
No reproduction or networking permitted without license from IHS
Not for Resale

ARTICLE FB-1000
INTRODUCTION

FB-1100 SCOPE

This section of the Code provides requirements for the performance, design, construction, acceptance testing, and quality assurance for medium efficiency filters used in nuclear facilities.

FB-1110 PURPOSE

The purpose of this Code section is to ensure that medium efficiency filters used in nuclear facilities are acceptable in all aspects of performance, design, and construction.

FB-1120 APPLICABILITY

This section shall be applied to the use of medium efficiency filters installed in nuclear facilities. The normal function of these filters is to reduce the particulate loading to HEPA filters. This section applies to extended-media, dry-type filters with an average atmospheric dust spot efficiency, per ASHRAE 52.1, greater than 40% but less than 99%.

FB-1121 Limitations

This section does not cover the following:

(a) system design requirements for the use of filters

(b) mounting frames for the medium efficiency filters

FB-1122 Responsibility

Appendix FB-A contains guidelines for the division of responsibility.

FB-1130 DEFINITIONS AND TERMS

Definitions with common application are contained in Section AA of the Code. The following terms have special meaning in the context of this section.

filter frame: a structure that encloses the edges of the filter media (or filter pack) and provides a filter mounting surface.

filter media: part of the filter designed to remove particulate matter from the air or gas stream.

lot: the quantity of filters produced using the same processes, facilities, equipment, and materials from which the representative units used for inspection and testing are selected.

sealants: materials used for the following purposes:

(a) to hold the media in position in the filter frame

(b) to attach gaskets

(c) to splice media

separator: device used to support and position folds in the filter media to provide air passage.

Copyright ASME International
Provided by IHS under license with ASME
No reproduction or networking permitted without license from IHS
Not for Resale

ARTICLE FB-2000
REFERENCED DOCUMENTS

Common application documents referenced in this Code section are detailed in Article AA-2000. Where ASTM material specifications are specified, the equivalent ASME material specification may be substituted. Where the date is not cited, the latest revision shall be used.

ANSI/ASHRAE 52.1-1992. Gravimetric and Dust Spot Procedures for Testing Air Cleaning Devices Used in General Ventilation for Removing Particulate Matter[1]

Publisher: American Society of Heating, Refrigerating and Air Conditioning Engineers (ASHRAE), 1791 Tullie Circle, NE, Atlanta, GA 30329

[1] May also be obtained from American National Standards Institute, 25 West 43rd Street, New York, NY 10036.

ANSI/ASQC Z1.4-1993, American National Standard Sampling Procedures and Tables for Inspection by Attributes[1]

Publisher: American Society for Quality (ASQ), P.O. Box 3005, Milwaukee, WI 53201-3005

ASTM D 1056-91, Specification for Flexible Cellular Materials — Sponge or Expanded Rubber

Publisher: American Society for Testing and Materials (ASTM), 100 Barr Harbor Drive, West Conshohocken, PA 19428-2959

UL 900-94, Standard for Air Filters Units

Publisher: Underwriters Laboratories, Inc. (UL), 333 Pfingsten Road, Northbrook, IL 60062-2096

Copyright ASME International
Provided by IHS under license with ASME
No reproduction or networking permitted without license from IHS
Not for Resale

ARTICLE FB-3000
MATERIALS

FB-3100 ALLOWABLE MATERIALS

FB-3110 MEDIA

The filter media shall be glass fiber based, containing a binder to retain the fibers, with both fiber and binder being suitable for the environment in accordance with Article FB-4000.

FB-3120 FILTER FRAME

The filter frames shall consist of corrosion-resistant material suitable for the environment in accordance with Article FB-4000.

FB-3130 SEPARATORS

The separators shall consist of corrosion-resistant material suitable for the environment in accordance with Article FB-4000.

FB-3140 SEALANTS AND ADHESIVES

Sealants and adhesives shall be suitable for the environment in accordance with Article FB-4000 and shall qualify as self-extinguishing in accordance with UL 900, Class 1 requirements.

FB-3150 GASKETS

Gasket material shall be oil-resistant expanded cellular elastomer that conforms with the requirements of ASTM D 1056, grade 2C3 or 2C4.

FB-3200 SPECIAL LIMITATIONS OF MATERIALS

A consideration of material deterioration caused by service conditions is outside the scope of this Code. It is the responsibility of the Owner or designee to identify the environment in which the filter must operate and to take appropriate precautions.

Copyright ASME International
Provided by IHS under license with ASME
No reproduction or networking permitted without license from IHS
Not for Resale

ARTICLE FB-4000
DESIGN

FB-4100 GENERAL DESIGN

Medium efficiency filters shall be replaceable, extended media, dry type, and certified to UL 900, Class 1.

FB-4200 DESIGN CRITERIA

Design criteria shall be specified for the following parameters:

(a) rated flow, nominal in cfm (m^3/hr) per ANSI/ASHRAE 52.1

(b) design pressure in inches of water gage (Pa)

(c) temperature operating range in °F (°C)

(d) average atmospheric dust spot efficiency as measured by ANSI/ASHRAE 52.1

(e) initial resistance in inches of water gage (Pa) at rated flow per ANSI/ASHRAE 52.1

(f) rated final resistance in inches of water gage (Pa) at rated flow per ANSI/ASHRAE 52.1

(g) dust holding capacity in pounds (kg) per ANSI/ASHRAE 52.1

(h) medium efficiency filter frame dimensions in inches (mm, height × width × depth)

FB-4300 STRUCTURAL REQUIREMENTS

See seismic requirements in FB-5240 and FB-5241.

Copyright ASME International
Provided by IHS under license with ASME
No reproduction or networking permitted without license from IHS
Not for Resale

ARTICLE FB-5000
INSPECTION AND TESTING

The inspection and testing of medium efficiency filters shall conform to the requirements of Article AA-5000 and the specific requirements of this Article.

FB-5100 INSPECTION PLAN

FB-5110 PLAN

The Manufacturer shall establish a sampling and inspection plan in accordance with ANSI/ASQC Z1.4 or by another method acceptable to the purchaser.

FB-5120 MINIMUM INSPECTION REQUIREMENTS

Filters packaged for shipment shall be inspected in accordance with the Manufacturer's quality assurance program.

The Manufacturer shall develop a checklist to verify that observations were performed. This checklist shall establish inspection requirements and acceptance criteria including provision for the following:

(a) inspection of the filter media for splits, tears, or holes

(b) inspection of the connection between the filter media and the filter frame for splits, tears, or holes

(c) inspection for missing or incorrect parts or components

(d) inspection for incorrect fit of parts or components

(e) inspection of workmanship

(f) inspection for cleanliness and appearance

(g) inspection for correct identification on the filter nameplate and carton

The purchaser may specify other inspection requirements to this checklist deemed to be appropriate for the filter's application.

FB-5130 REJECTION AND REINSPECTION

An inspection shall be performed on a filter lot. If a lot is rejected, it may be resubmitted for inspection. Following 100% inspection of the rejected lot and repair or removal of all defective units, the lot will be accepted.

FB-5200 QUALIFICATION TESTING

New or revised filter designs shall require qualification testing prior to acceptance and production.

FB-5210 TESTING REQUIREMENTS

To obtain standard ratings, three medium efficiency filters of the design to be qualified shall be tested and test results shall be provided in accordance with ANSI/ASHRAE 52.1. The rated performance may be obtained by averaging the results of the tests on the three filters. The rated performance shall be established at airflow rate(s) selected by the Manufacturer for initial resistance, initial atmospheric dust spot efficiency, average atmospheric dust spot efficiency, average synthetic dust weight arrestment, and dust holding capacity. The various parameters at which the filters are rated are defined in ANSI/ASHRAE 52.1.

FB-5220 CERTIFICATION

Medium efficiency filters shall be certified to conform to UL 900, Class 1.

FB-5230 REQUALIFICATION

The filter design shall be requalified whenever there is a change in design, material, or manufacturing methods.

Copyright ASME International
Provided by IHS under license with ASME
No reproduction or networking permitted without license from IHS
Not for Resale

FB-5240 SEISMIC QUALIFICATION

Each design of medium efficiency filter shall be qualified by testing in accordance with AA-4350. At least one unit of each design shall be tested.

FB-5241 Acceptance Criteria

The medium efficiency filter shall show no structural damage by visual inspection after testing.

Copyright ASME International
Provided by IHS under license with ASME
No reproduction or networking permitted without license from IHS
Not for Resale

ARTICLE FB-6000
FABRICATION

FB-6100 GENERAL

The medium efficiency filter shall be assembled from materials that conform to Article FB-3000 and meet the design requirements of Article FB-4000. Following assembly, the filter shall be inspected and tested in accordance with the requirements of Article FB-5000.

FB-6200 MANUFACTURE AND ASSEMBLY

The general requirements for fabrication and installation are contained in AA-6200 and AA-6300.

FB-6210 FLATNESS AND SQUARENESS

The faces of the case shall be flat and parallel to within a total allowance of $\frac{1}{16}$ in. (1.6 mm). The case shall be square to within a total allowance of $\frac{1}{8}$ in. (3 mm) when measured diagonally across the corners of both faces.

FB-6220 OVERALL DIMENSIONS

Filters of size 24 in. × 24 in. × $5\frac{1}{8}$ in. (610 mm × 610 mm × 149 mm) and larger shall be +0 in./$-\frac{1}{8}$ in. (+0 mm/−3 mm) outside dimensions, except depth, which shall be +$\frac{1}{16}$ in./−0 in. (+1.6 mm/−0 mm). All filters smaller than the above shall be +0 in./$-\frac{1}{16}$ in. (+0 mm/−1.6 mm) outside dimensions except depth, which shall be +$\frac{1}{16}$ in./−0 in. (+1.6 mm/−0 mm). The above dimensions exclude gaskets.

Copyright ASME International
Provided by IHS under license with ASME
No reproduction or networking permitted without license from IHS
Not for Resale

ARTICLE FB-7000
PACKAGING, SHIPPING, RECEIVING, STORAGE, AND HANDLING

FB-7100 GENERAL

Medium efficiency filters shall be placed in protective cartons with pleats arranged vertically. All packaging, shipping, receiving, storage, and handling shall meet the requirements of Article AA-7000 and ASME NQA-1-1994.

Copyright ASME International
Provided by IHS under license with ASME
No reproduction or networking permitted without license from IHS
Not for Resale

ARTICLE FB-8000
QUALITY ASSURANCE

FB-8100 GENERAL

Quality assurance shall be in accordance with Article AA-8000 of this Code. The manufacturer of this equipment shall develop and maintain a QA program acceptable to the owner.

FB-8200 DOCUMENTATION

The following documentation shall be made available to the purchaser, if requested:

(a) a table or drawing giving outline dimensions of the filter

(b) a list of the materials of construction with appropriate specifications

(c) a copy of the qualification test results performed in accordance with FB-5200

(d) a Certificate of Conformance to this Code and purchase specifications

Copyright ASME International
Provided by IHS under license with ASME
No reproduction or networking permitted without license from IHS
Not for Resale

ARTICLE FB-9000
LABELS AND MARKING

FB-9100 FILTER MARKINGS

Each filter shall be equipped with a permanent label. The marking on the label shall be legible and shall provide the following information:

(a) Manufacturer's name and location

(b) Manufacturer's designation and part number

(c) date of manufacture (month and year)

(d) rated flow capacity in cfm (m^3/hr)

(e) rated initial pressure drop in inches of water gage (Pa)

(f) recommended maximum pressure drop in inches of water gage (Pa)

(g) rated atmospheric dust spot efficiency

(h) airflow direction arrow (showing both directions if allowable without impacting published ratings)

(i) installation orientation (e.g., "Install This Way Up" or "Install With This Side Vertical")

(j) UL label

(k) temperature operating range in °F (°C)

FB-9200 PACKAGE MARKING

Marking or labeling of each shipping container (carton containing one filter) shall be of a size and type that can be read at a distance of 3 ft (0.9 m). The following information shall be provided:

(a) Manufacturer's name

(b) Manufacturer's designation and part number

(c) arrows and "This Side Up" orientation indication for shipping and storage and "Fragile" in letters no less than $\frac{3}{4}$ in. (19 mm) high

(d) purchase order number or other identifying markings requested by the purchaser

Copyright ASME International
Provided by IHS under license with ASME
No reproduction or networking permitted without license from IHS
Not for Resale

NONMANDATORY APPENDIX FB-A
DIVISION OF RESPONSIBILITY

This Nonmandatory Appendix is intended to identify the roles normally assumed by the organizations responsible for fulfilling Code requirements when not specifically addressed in an article or subarticle. These are guidelines to assist with Code compliance and are not to be construed as legal or contractual responsibilities unless so invoked by the Owner or designee.

TABLE FB-A-1000
DIVISION OF RESPONSIBILITY

FB-	Item	Responsible Party
3000	Materials	Manufacturer/Owner
4000	General design	Manufacturer
5000	Inspection and testing	Manufacturer
6000	Fabrication	Manufacturer
7000	Packaging and shipping	Manufacturer
7000	Receiving, storage, and handling	Owner
8000	Quality assurance	Manufacturer
9000	Labels and marking	Manufacturer

Copyright ASME International
Provided by IHS under license with ASME
No reproduction or networking permitted without license from IHS
Not for Resale

SECTION FC
HEPA FILTERS

FC-1000	**Introduction**	353
FC-1100	Scope	353
FC-2000	**Referenced Documents**	354
FC-3000	**Materials**	355
FC-3100	Allowable Materials	355
FC-3200	Special Limitations of Materials	356
FC-4000	**Design**	357
FC-4100	General Design	357
FC-4200	Performance Requirements	358
FC-4300	Structural Requirements	359
FC-5000	**Inspection**	363
FC-5100	Qualification Testing	363
FC-5200	Production Testing	365
FC-6000	**Fabrication**	366
FC-6100	General	366
FC-6200	Manufacture and Assembly	366
FC-6300	Workmanship	366
FC-7000	**Packaging, Shipping, and Storage**	367
FC-8000	**Quality Assurance**	368
FC-8100	Responsibility	368
FC-8200	Certificate of Conformance	368
FC-9000	**Nameplates**	369
FC-9100	Filter Marking	369
FC-9200	Package Marking	369

Copyright ASME International
Provided by IHS under license with ASME
No reproduction or networking permitted without license from IHS
Not for Resale

Figures

FC-4110-1	Metal Case Filter	360
FC-4110-2	Type A Separator Filter	361
FC-4110-3	Type B Minipleat (Thread Separator) Filter	361
FC-4110-4	Type C Separatorless Filter	362

Tables

FC-4110	Nominal Sizes and Ratings	358
FC-5100	Test Groups and Sequence	364
FC-5120	Acceptable Aerosol Test	364
FC-5140	Test Conditions and Requirements	364

Mandatory Appendix

FC-I	Filter Media: Fire-Resistant, High Efficiency	370

Nonmandatory Appendix

FC-A	Division of Responsibility	377

Copyright ASME International
Provided by IHS under license with ASME
No reproduction or networking permitted without license from IHS
Not for Resale

ARTICLE FC-1000
INTRODUCTION

FC-1100 SCOPE

This section of the Code provides requirements for the performance, design, construction, acceptance testing, and quality assurance for high efficiency particulate air (HEPA) filters used in nuclear safety-related air or gas treatment systems in nuclear facilities.

FC-1110 PURPOSE

The purpose of this Code is to assure that HEPA filters used in nuclear facilities are acceptable in all aspects of performance, design, construction, acceptance, and testing.

FC-1120 APPLICABILITY

FC-1121 HEPA Filters

This section applies to extended media dry-type filters for use in air and gas streams with a 250°F (121°C) maximum continuous temperature.

Three types of HEPA filters are addressed:

(a) Type A: folded filter media with corrugated separator/supports

(b) Type B: minipleat medium with glass fiber or noncombustible thread separators

(c) Type C: continuous corrugated filter media folded without separators

FC-1122 Limitations

This section does not cover:

(a) integration of HEPA filters into air cleaning systems

(b) HEPA filters larger than 24 in. × 24 in. × 11½ in. (610 mm × 610 mm × 292 mm) case dimensions

(c) filter mounting frames

FC-1130 DEFINITIONS AND TERMS

DOP aerosol: a dispersion of dioctyl phthalate (DOP) particles in air.

filter: a device having a porous or fibrous media for removing suspended particles from air or gas.

HEPA filter: high efficiency particulate air filter. A throwaway, extended-media dry type filter with a rigid casing enclosing the full depth of the pleats. The filter shall exhibit a minimum efficiency of 99.97% when tested with an aerosol of essentially monodispersed 0.3 micrometer diameter test aerosol particles.

Independent Filter Test Laboratory: an autonomous body not affiliated with a HEPA filter manufacturer or supplier subject to this Code section but capable of performing the tests necessary to demonstrate the ability of HEPA filters to meet this Code section.

media velocity: the linear velocity of the air or gas into filter media.

medium: the filtering material in a filter. The plural form is media.

penetrometer: a device for generating essentially 0.3 micrometer diameter monodisperse test aerosol and for evaluating the aerosol penetration and air resistance of fabricated HEPA filters.

test aerosol: dispersion of particles in air containing a sufficient quantity of the most penetrating particle size based upon the filter medium structure, the air velocity and the particle composition, as described in IES-RP-CC007.1.

Copyright ASME International
Provided by IHS under license with ASME
No reproduction or networking permitted without license from IHS
Not for Resale

ARTICLE FC-2000
REFERENCED DOCUMENTS

Common application documents referenced in this Code section are detailed in Article AA-2000. Where ASTM materials are specified, the equivalent ASME material specification may be substituted. Unless otherwise shown, the latest edition and addenda are applicable.

APA H850 U.S. Product Standard (PS) 1-83 for Construction and Industrial Plywood

Publisher: American Plywood Association (APA), P.O. Box 11700, Tacoma, WA 98411-0700

ASTM A 176 Rev A, Specification for Stainless and Heat-Resisting Chromium Steel Plate, Sheet, and Strip

ASTM A 240 Rev A, Specification for Heat-Resisting Chromium and Chromium-Nickel Stainless Steel Plate, Sheet, and Strip for Pressure Vessels

ASTM A 366/A 366M-91 (Reapproved 1993), Standard Specification for Steel, Sheet, Carbon, Cold-Rolled, Commercial Quality

ASTM A 570/570M, Specification for Steel, Sheet, and Strip, for Carbon, Hot-Rolled, Structural Quality

ASTM A 611-92, Specification for Steel, Cold-Rolled Sheet, Carbon, Structural Quality

ASTM A 740-86, Specification for Hardware Cloth (Woven or Welded Galvanized Steel Wire Fabric)

ASTM B 209 Rev A, Specification for Aluminum and Aluminum Alloy Sheet and Plate

ASTM B 766-86, Standard Specification for Electrodeposited Coatings of Cadmium

ASTM D 1056-91, Specification for Flexible Cellular Materials — Sponge or Expanded Rubber

ASTM D 3359 Rev A-92, Test Methods for Measuring Adhesion by Tape Test

ASTM E 84 Rev A-91, Test Methods for Surface Burning Characteristics of Building Materials

Publisher: American Society for Testing and Materials (ASTM), 100 Barr Harbor Drive, West Conshohocken, PA 19428-2959

FED-STD-141C-93, Method of Inspection, Sampling and Testing Paint, Varnish, Lacquer, and Related Materials

MIL-STD-282, Filter Units, Protective Clothing, Gas Mask Components and Related Products: Performance Test Method

Publisher: Superintendent of Documents, U.S. Government Printing Office, Washington, DC 20402

IES-RP-CC007.1-91 Testing ULPA Filters

Publisher: Institute of Environmental Sciences and Technology (IEST), 5005 Newport Drive, Rolling Meadows, IL 60008-3841

T411-OM-89 Thickness (Caliper) of Paper and Paperboard and Combined Board

T413-OM-85 Ash in Paper and Paperboard

ANSI/T494-OM-88 Tensile Breaking Properties of Paper and Paperboard (Using Constant Rate of Elongation Apparatus)[1]

Test Method 509-88 Hydrogen Ion Concentration (pH) of Paper Extracts (Cold Extract Method)

Publisher: Technical Association of the Pulp and Paper Industry (TAPPI), Technology Park/Atlanta, P.O. Box 105113, Atlanta, GA 30348-5113

UL 586-90 Standard for Safety High Efficiency, Particulate Air Filter Units

Publisher: Underwriters Laboratories, Inc. (UL), 333 Pfingsten Road, Northbrook, IL 60062-2096

[1] May also be obtained from American National Standards Institute, 25 West 43rd Street, New York, NY 10036.

Copyright ASME International
Provided by IHS under license with ASME
No reproduction or networking permitted without license from IHS
Not for Resale

ARTICLE FC-3000
MATERIALS

FC-3100 ALLOWABLE MATERIALS

FC-3110 CASE MATERIALS

The case shall be made from the following materials:

(a) Type I — Steel sheet, 0.0720 in. (14 gage USS) (1.83 mm) minimum thickness conforming to ASTM A 366, A 570, or A 611. Prior to case construction but after cutting, the metal sections shall be cadmium plated in accordance with ASTM B 766-86, type OS, minimum.

(b) Type II — Stainless steel sheet, 0.0720 in. (14 gage USS) (1.83 mm) minimum thickness, conforming to ASTM A 176, Type 409, or ASTM A 240, Type 304.

(c) Type III — $\frac{3}{4}$ in. (19 mm) plywood conforming to marine exterior type, minimum grade A-C, APA H850. The grade shall be fire retardant treated. The plywood shall have a flame spread classification of 25 or less when tested as specified in ASTM E 84.

(d) Type IV — $\frac{3}{4}$ in. (19 mm) plywood conforming to exterior type, minimum grade A-C, APA H850. The grade shall be fire-retardant treated. The plywood shall have a flame spread classification of 25 or less when tested as specified in ASTM E 84.

FC-3120 GASKET MATERIAL

FC-3121 Elastomer

The gasket material shall be oil-resistant, expanded cellular elastomer in accordance with grade 2C3 2C4 of ASTM D 1056.

FC-3122 Gelatinous Seal

A self-adhesive and self-healing cured gel seal made of Polydimethylsiloxane. The filter shall be qualified per FC-5100 using the gel as the seal.

FC-3130 FILTER MEDIA

The filter media shall conform to the requirements of Appendix FC-I.

FC-3140 FACEGUARDS

Metallic faceguards shall be fabricated from galvanized 4 × 4 mesh, wire fabric (hardware cloth) made from 23 gage steel wire (0.56 mm) conforming to ASTM A 740.

FC-3150 ADHESIVES

Adhesives used to splice the media, fasten gaskets to filter frame, and seal the filter pack or faceguards to the frame shall be self-extinguishing as evidenced by testing in accordance with the spot-flame test of FC-5160 or UL 586.

FC-3160 SEPARATORS

(a) The separators for filters constructed according to Fig. FC-4110-2, Type A shall be made from corrugated aluminum, 0.0015 in. (0.038 mm) thick, min., conforming to ASTM B 209, Alloy 5052-H39, 3003-H19, or 1145-H19.

(b) Acid-resistant separators for filters constructed according to Fig. FC-4110-2, Type A shall be made from corrugated aluminum, 0.0015 in. (0.038 mm) thick, min., conforming to ASTM B 209, Alloy 5052-H39 or 3003-H19, or 1145-H19 coated on both surfaces with a vinyl-epoxy coating 0.8 to 1.2 mils thick. The applied coating shall meet the adhesion requirements, off-gas test, and flexibility test per FC-4151. The coating should be tinted to verify coverage of the separator.

(c) The separators for filters constructed according to Fig. FC-4110-3, Type B shall be ribbons of noncom-

Copyright ASME International
Provided by IHS under license with ASME
No reproduction or networking permitted without license from IHS
Not for Resale

bustible adhesive threads or glass fiber bonded to the filter media.

(d) Separatorless filters constructed according to Fig. FC-4110-4, Type C shall have the filter media folded in such a manner that the filter pack is self-supported by the convolutions of the adjacent folds.

FC-3200 SPECIAL LIMITATIONS OF MATERIALS

The consideration of deterioration of materials caused by service is generally outside the scope of this Code. It is the responsibility of the Owner or Engineer to identify the environment in which the filter must operate.

FC-3210 ALTERNATE MATERIALS

Notwithstanding the materials referenced in this Code, other materials found acceptable by the qualification tests will be acceptable for fabrication of HEPA filters.

Copyright ASME International
Provided by IHS under license with ASME
No reproduction or networking permitted without license from IHS
Not for Resale

ARTICLE FC-4000
DESIGN

FC-4100 GENERAL DESIGN

FC-4110 HEPA FILTERS

(a) Filters shall be constructed as depicted in Figs. FC-4110-1, FC-4110-2, FC-4110-3, and FC-4110-4. The size and ratings shall be as specified in Table FC-4110. The filter shall be assembled with filter pack Type A, Type B, or Type C. The entire inside surface of the case shall be coated with adhesive to secure and seal the filter pack to the case. The gasket shall be fixed to the case with an adhesive per FC-3150.

(b) The total media area provided within the filter pack shall be such that maximum media velocity is 5 ft/min (1.52 m/min) at the rated flow.

(c) Filter designs for flows other than those listed in Table FC-4110 are acceptable provided that the minimum ratings of Table FC-4110 and requirements of FC-4120 are met.

FC-4111 Splices and Patches

Filters smaller than 500 cfm (850 m^3/hr) and all Type B filters shall not have splices. Filters 500 cfm (850 m^3/hr) and larger shall not have more than one splice in the filter pack. The filter media shall have no patches.

FC-4120 FILTER CASE

Filter cases are used to house the filter pack. All case joints shall be sealed. Case materials shall be in accordance with FC-3110. Construction shall meet the requirements of Article FC-6000.

FC-4130 FILTER PACK

(a) Type A filter packs shall be made by folding the media to the required depth. The folded filter media shall be supported with corrugated separators. The filter media pack shall not extend beyond the exposed ends of the separators. The separators shall not extend beyond the ends of the frame when the media pack is bonded to the frame. The filter pack shall be rigid within the frame and the separators shall be perpendicular to two opposite parallel sides of the frame. Separators and media shall not vary more than $\frac{1}{4}$ in. (6 mm) from a straight line connecting the fixed ends. Abrupt deviations are not acceptable.

(b) Type B filter packs shall be made from a series of flat panels of pleated filter media which are assembled in a V-panel fashion. Each media pack within a panel shall use a shallow pleated fold with a maximum height of $\frac{3}{4}$ in. (19 mm). Adjacent pleats shall be separated and supported by ribbons of glass fiber media or noncombustible threads glued to the filter media. When the panels are installed in the filter case, the top and bottom panels shall be sealed in a reservoir of adhesive at least $\frac{1}{16}$ in. (1.6 mm) deep. The mating panels shall have a common glued metal joint. No panel shall vary more than $\frac{1}{4}$ in. (6 mm) from a straight line connecting the fixed ends to the frame. Filter media and supports shall not extend beyond individual panel frames. No ribbons and/or media supports shall vary from a straight line by more than $\frac{1}{4}$ in. (6 mm). Side panels shall be securely bonded to the side of the filter case with adhesive. No media splicing is permitted within the individual filter panels.

(c) Type C filter packs shall be made by corrugating or embossing a continuous sheet of filter media and folding media to the required depth to make the filter pack. When installed in the frame, the self-supporting media convolute or embossed centers shall not vary more than $\frac{3}{8}$ in. (9 mm) top to bottom from a straight line drawn perpendicular to the top and bottom frame. Crest-to-crest contacts on adjacent folds shall not vary

Copyright ASME International
Provided by IHS under license with ASME
No reproduction or networking permitted without license from IHS
Not for Resale

TABLE FC-4110
NOMINAL SIZES AND RATINGS

Number Designation	Size		Minimum Rated Air Flow		Maximum Resistance	
	in.	mm	scfm	m^3/hr	in. wg	Pa
1	8 × 8 × $3^1/_{16}$	203 × 203 × 78	25	42	1.3	325
2	8 × 8 × $5^7/_8$	203 × 203 × 149	50	85	1.3	325
3	12 × 12 × $5^7/_8$	305 × 305 × 149	125	212	1.3	325
4	24 × 24 × $5^7/_8$	610 × 610 × 149	500	850	1.0	250
5	24 × 24 × $11^1/_2$	610 × 610 × 292	1000	1700	1.0	250
6	24 × 24 × $11^1/_2$	610 × 610 × 292	1250	2125	1.0	250
7	24 × 24 × $11^1/_2$	610 × 610 × 292	1500	2550	1.3	325
8	24 × 24 × $11^1/_2$	610 × 610 × 292	2000	3400	1.3	325
9	12 × 12 × $11^1/_2$	305 × 305 × 292	250	424	1.0	250

by more than $^1/_{16}$ in. (1.6 mm). Abrupt deviations in media folds are not acceptable. Filter media and/or filter media supports, if used, shall not extend beyond the filter frame. The filter pack shall be rigid within the frame and there shall be no kinked media.

FC-4140 GASKETS

FC-4141 Elastomer

The gasket shall be sealed to the filter frame with an adhesive per FC-3150. The edge of the gasket shall not project beyond the outside of the frame. If gasket material joints are required, they shall be notched or dovetailed and the edges glued in a manner that assures no leakage. There shall be no more than four gasket joints per HEPA filter.

FC-4142 Gelatinous Seal

The seal shall be effected by means of a continuous knife edge on the sealing surface of the holding frame which mates into a continuous channel on the case of the HEPA filter. The channel shall be filled with a gelatinous compound per FC-3122 that conforms to the seal knife edge.

FC-4150 SEPARATORS

Separator material shall be capable of withstanding continuous service under all specified operating conditions without swelling, sagging, or melting.

FC-4151 Coating

Separators coated in accordance with FC-3160(b), shall meet the following tests after application of the coating to the separator:

(a) The coating shall meet or exceed a rating of 3A when tested using Method A of ASTM D 3359.

(b) Off-gas volatiles, as determined by thermo-gravimetric analysis, shall not exceed 5% by weight when a 2 in. (50.8 mm) × 2 in. (50.8 mm) sample of the coated separator is subjected to temperatures from 20°C to 1000°C.

(c) The coated separator shall pass a flexibility test in accordance with FED-STD-141C, Method 6221.

FC-4160 FACEGUARDS

A faceguard shall be installed in each face of the filter, inside the filter case but not under the gasket.

FC-4200 PERFORMANCE REQUIREMENTS

Designs shall be qualified in accordance with Article FC-5000.

FC-4210 TEST AEROSOL PENETRATION

The total test aerosol penetration through the filter media, frame, and gasket shall be not greater than 0.03% of upstream concentration when tested at rated airflow and at 20% of rated flow when tested in accordance with FC-5120.

Copyright ASME International
Provided by IHS under license with ASME
No reproduction or networking permitted without license from IHS
Not for Resale

FC-4220 RESISTANCE TO AIRFLOW

The resistance to airflow at the rated airflow of the clean filter shall meet the requirements of Table FC-4110, when tested in accordance with FC-5110.

FC-4300 STRUCTURAL REQUIREMENTS

FC-4310 GENERAL

The HEPA filters shall be seismically qualified by test in accordance with AA-4350.

FC-4320 ACCEPTANCE CRITERIA

The acceptance criteria are

(a) no structural damage shall be evident by visual examination

(b) airflow resistance and aerosol penetration requirements of FC-5110 and FC-5120 shall be met.

Copyright ASME International
Provided by IHS under license with ASME
No reproduction or networking permitted without license from IHS
Not for Resale

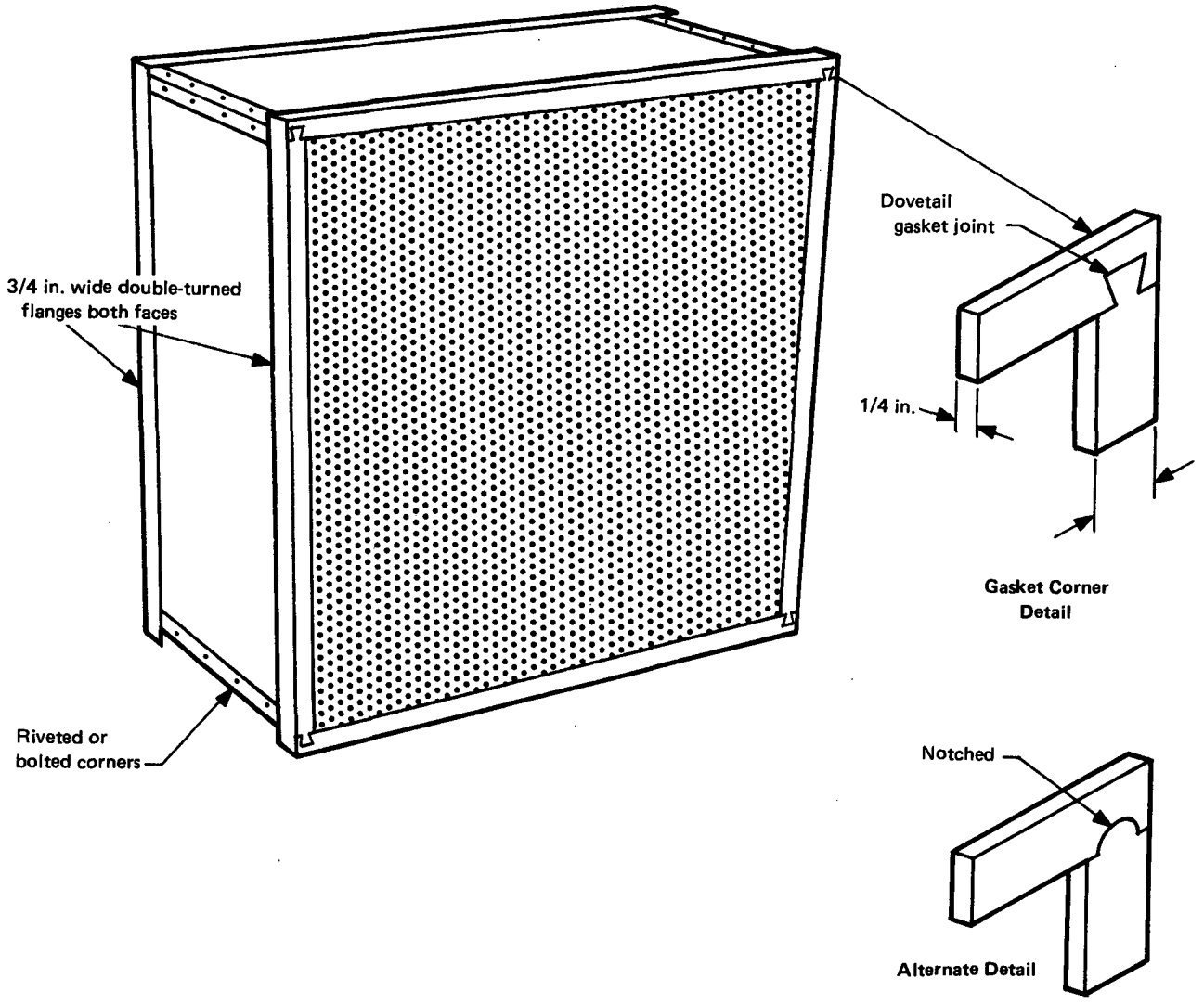

FIG. FC-4110-1 METAL CASE FILTER

Copyright ASME International
Provided by IHS under license with ASME
No reproduction or networking permitted without license from IHS
Not for Resale

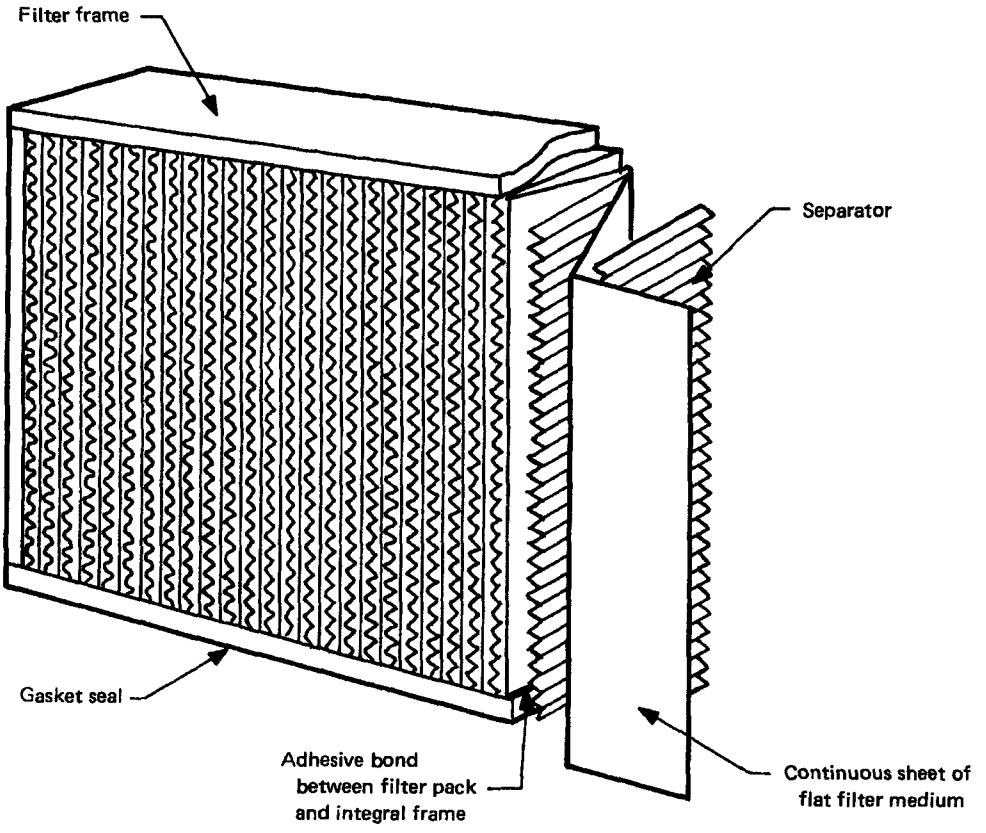

The filter pack shall be formed by folding the filter media back and forth into pleats. The individual pleats (folds) shall be separated and/or supported by corrugated separators.

FIG. FC-4110-2 TYPE A SEPARATOR FILTER

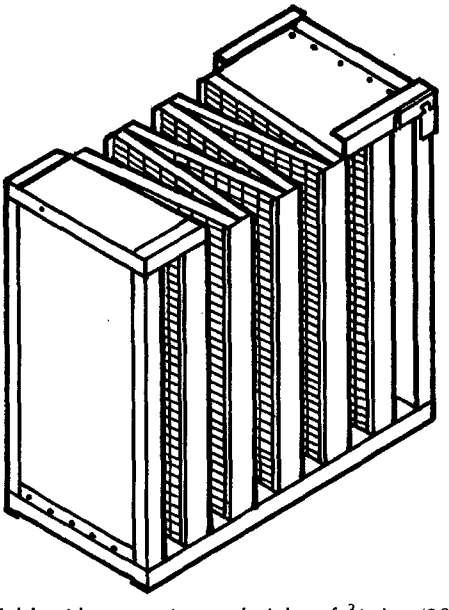

The filter pack shall be a minipleat fold with a maximum height of $^{3}/_{4}$ in. (20 mm). Adjacent pleats shall be separated and/or supported by glass fiber paper or noncombustible threads which have been glued to the filter media. A full-size filter pack shall be formed by arranging pleated panels in a "V" fashion.

FIG. FC-4110-3 TYPE B MINIPLEAT (THREAD SEPARATOR) FILTER

Copyright ASME International
Provided by IHS under license with ASME
No reproduction or networking permitted without license from IHS
Not for Resale

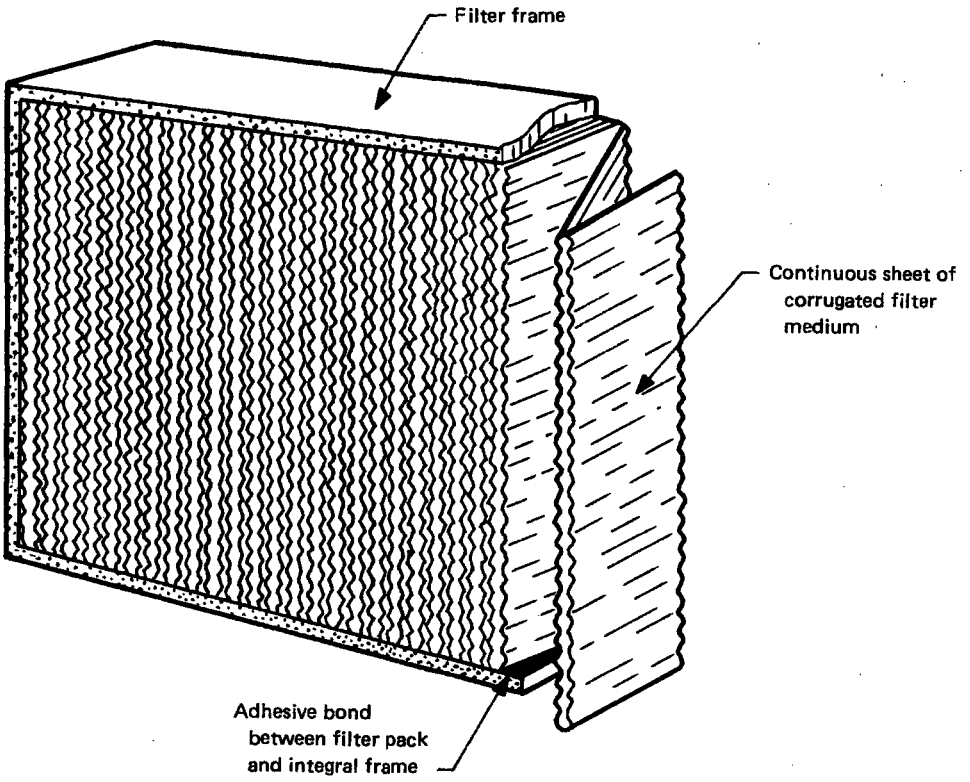

GENERAL NOTE: The filter pack shall be constructed by pleating a continuous corrugated filter media. The corrugated filter media shall be folded in such a manner that the filter pack is supported by the convolutions of the adjacent folds.

FIG. FC-4110-4 TYPE C SEPARATORLESS FILTER

Copyright ASME International
Provided by IHS under license with ASME
No reproduction or networking permitted without license from IHS
Not for Resale

ARTICLE FC-5000
INSPECTION

The inspection and testing of HEPA filters shall conform to the requirements in the following paragraphs.

FC-5100 QUALIFICATION TESTING

New or revised filter designs shall require qualification testing prior to acceptance and production. Filter designs shall be requalified at least every 5 years. Tests must be performed and certified by an independent test facility.

A qualification sample of 11 of each size HEPA filter shall be manufactured using the same methods, materials, equipment, and processes as will be used during production. The test sequence is detailed in Table FC-5100.

The 11 filters used in the qualification sample shall then be divided into four test groups by the random selection shown in Table FC-5100 and assigning them to the required test groups.

(a) If the Manufacturer intends to deliver filters with a splice in the filter media, three of the qualification samples shall contain a splice.

(b) Each filter in the qualification sample shall be visually examined for defects.

(c) The qualification samples shall be tested for all the requirements for this section. Failure of any filter to comply with the requirements of this section shall be cause for the rejection of the qualification sample.

FC-5110 RESISTANCE TO AIRFLOW

The clean filter resistance to airflow shall meet the requirements of Table FC-4110 when tested in accordance with FC-5120.

FC-5120 TEST AEROSOL PENETRATION

The resistance to airflow and test aerosol penetration shall be determined in accordance with Table FC-5100. The test conditions need to be corrected to standard temperature and pressure. The total aerosol penetration through the filter media, frame, and gasket shall be no greater than 0.03% of upstream concentration at rated airflow and at 20% of rated airflow.

Suitable test aerosol penetrometers are included in Table FC-5120 for filter sizes 1, 2, and 3 and filter sizes 4, 5, 6, 7, 8, and 9. The use of laser particle counters in accordance with the methods and procedures of IES-RP-CC-007.1 are also acceptable.

FC-5130 RESISTANCE TO ROUGH HANDLING

The Type A and C filters shall be tested on a rough handling machine for 15 min. at $^{3}/_{4}$ in. (19 mm) total amplitude at 200 cycles per min. in accordance with Test Method 105.10 of MIL-STD-282. The filter shall be placed on the machine with the faces and pleats in a vertical position. For Type B filter, the rough-handling machine test position shall be with the face vertical and pleats horizontal. At the conclusion of the shaking period, the filter shall be visually examined for damage. Cracked or warped frames, loose corners or joints, cracked adhesive, loose or deformed media, separators, or faceguards shall be cause for rejection.

After the rough handling test, the same filter shall meet the requirements in FC-5110 and FC-5120.

FC-5140 RESISTANCE TO PRESSURE

The filter shall be tested for resistance to pressure on a machine capable of testing in accordance with Table FC-5140.

Prior to being tested for resistance to pressure, the filter shall be conditioned at atmospheric pressure for 24 hr min. in a chamber at 95°F ± 5°F (35°C ± 3°C) and a relative humidity (RH) of 95°F ± 5%.

Copyright ASME International
Provided by IHS under license with ASME
No reproduction or networking permitted without license from IHS
Not for Resale

TABLE FC-5100
TEST GROUPS AND SEQUENCE

Group	Quantity	Requirement	Test Paragraph
I	4	Resistance to rated airflow	FC-5110
		Test aerosol penetration at rated airflow and at 20% of rated airflow	FC-5120
		Resistance to pressure	FC-5140
		Test aerosol penetration at 20% of rated airflow only	FC-5120
II	4	Resistance to rated airflow	FC-5110
		Test aerosol penetration at rated airflow and at 20% of rated airflow	FC-5120
		Resistance to rough handling	FC-5130
		Resistance to heated air	FC-5150
		Test aerosol penetration at rated airflow only	FC-5120
III	1	Resistance to spot flame	FC-5160
IV	2	Resistance to rated airflow	FC-5110
		Test aerosol penetration at rated airflow and at 20% of rated airflow	FC-5120
		Test aerosol penetration at rated airflow only	FC-5120

TABLE FC-5120
ACCEPTABLE AEROSOL TEST

Filter Size	Test Mechanism
1–3	Q-76 Penetrometer, Laser
4–9	Q-107 Penetrometer, Laser

TABLE FC-5140
TEST CONDITIONS AND REQUIREMENTS

Test Conditions	Test Requirements
Temperature	95°F ± 5°F (35°C ± 3°C)
Relative humidity	95°F ± 5%
Rate of airborne water droplets flowing toward the filter [Note (1)]	1 ± 1/4 lb/min/1000 cfm (2.2 ± 0.6 kg/min/1700 m^3/hr)
Pressure differential across filter	10.0 ± 0.2 in. of water (2.5 kPa)
Time to reach pressure	1/2 min, max.
Time duration at sustained differential pressure	1 hr, min.
Airflow	That required for producing the above pressure differential

NOTE:
(1) This is defined as the rate of water flowing through the spray orifice less the fallout and drainage from the air duct walls between points of location of the spray orifice and one inch before the face of the filter.

Copyright ASME International
Provided by IHS under license with ASME
No reproduction or networking permitted without license from IHS
Not for Resale

After being conditioned, the filters shall withstand the airflow and water spray environment listed in Table FC-5140 without rupture of the filter media.

Within 15 min after completion of the pressure test and while still wet, the filter shall meet the requirement of FC-5120 at 20% airflow.

FC-5150 RESISTANCE TO HEATED AIR

For resistance to heated air, the filter shall be installed in the test chamber and subjected to the rated flow of air heated to 700°F ± 50°F (370°C ± 25°C) for no less than 5 min.

Following exposure to heated air, the filter shall be tested at rated flow for test aerosol penetrations through the filter media, case, and gasket or gelatinous seal. The penetration shall not exceed 3%.

An Underwriters' Laboratories label (UL 586) shall be acceptable objective evidence of compliance with FC-5150.

FC-5160 SPOT FLAME RESISTANCE

The filter is to be mounted in the test duct and the airflow adjusted to rated airflow. A gas flame from a Bunsen burner is to be directed against the upstream face of the unit. The Bunsen burner is to be adjusted to produce a flame with a blue cone $2\frac{1}{2}$ in. (63 mm) long with a tip temperature of 1750°F ± 50°F (955°C ± 25°C), as measured by a thermocouple inserted in the flame. The tip of the cone is to be so applied that it touches the surface of the filter medium at a distance of not less than 2 in. (51 mm) from the filter frame. The flame is to be applied for 5 min at each of three separate locations on the filter face.

The Bunsen burner flame then is to be directed into a top corner of the filter unit in such a manner that the tip of the blue cone contacts the frame, filter pack, and sealing materials. The flame is to be applied for a period of 5 min. The test is to be repeated upon the opposite top corner of the sample filter unit.

After removal of the test flame at each point of application, there shall be no sustained flaming on the downstream face of the unit.

An Underwriters' Laboratories (UL 586) label shall be acceptable objective evidence of compliance with FC-5160.

FC-5200 PRODUCTION TESTING

Each filter manufactured for delivery shall be tested for test aerosol penetration and resistance to airflow in accordance with FC-5110 and FC-5120. The results of these tests shall be marked on the label of each filter.

Copyright ASME International
Provided by IHS under license with ASME
No reproduction or networking permitted without license from IHS
Not for Resale

ARTICLE FC-6000
FABRICATION

FC-6100 GENERAL

The HEPA filter shall be assembled from the materials designated in FC-3100 in accordance with the design requirements established in Article FC-4000. Following assembly, the filter shall be inspected and qualified in accordance with FC-5100. Production testing of qualified filters shall conform to FC-5200.

FC-6200 MANUFACTURE AND ASSEMBLY

The general requirements for fabrication and installation are contained in AA-6200 and AA-6300.

FC-6210 TOLERANCES

FC-6211 Flatness and Squareness

The faces of the case shall be flat and parallel to within a total allowance of $\frac{1}{16}$ in. (1.6 mm). The case shall be square to within a total allowance of $\frac{1}{8}$ in. (3 mm) when measured diagonally across the corners of both faces.

FC-6212 Overall Dimensions

Filters of size 24 in. × 24 in. × $5\frac{1}{8}$ in. (610 mm × 610 mm × 149 mm) and larger shall be +0 in./–$\frac{1}{8}$ in. (+0 mm/–3 mm) outside dimensions, except depth, which shall be +$\frac{1}{16}$ in./–0 in. (+1.6 mm/–0 mm). All filters smaller than the above shall be +0 in./–$\frac{1}{16}$ in. (+0 mm/–1.6 mm) outside dimensions except depth, which shall be +$\frac{1}{16}$ in./–0 in. (+1.6 mm/–0 mm). The above dimensions exclude gaskets.

FC-6220 MEDIA INSTALLATION

The filter media shall be fastened to the sides and ends of the filter case with adhesive to completely seal the edges of the media to the filter case. Patching of holes or tears in the media shall not be permitted.

FC-6300 WORKMANSHIP

The filter shall be free from foreign matter (dirt, oil, or viscous material) and damage, such as distorted or cracked frame, deformation or sagging of media, separators and faceguards, cracks in adhesive, and cracks or holes in exposed portions of the media. All the dimensional and performance requirements of this Code section are directed toward achieving the highest quality and workmanship possible.

Copyright ASME International
Provided by IHS under license with ASME
No reproduction or networking permitted without license from IHS
Not for Resale

ARTICLE FC-7000
PACKAGING, SHIPPING, AND STORAGE

Packaging, shipping, and storage shall be in accordance with Article AA-7000 and ASME NQA-2 Level B. Filters shall be individually packaged. Cartons shall have extra shock absorbing material at the corners of the filter. Types A and C filters shall be placed in the carton with the pleats vertical, Type B filters shall be placed in the carton with the pleats horizontal. The carton shall be clearly marked for proper orientation per FC-9200. Stacking of filters during storage and handling shall not be more than three filters high.

Copyright ASME International
Provided by IHS under license with ASME
No reproduction or networking permitted without license from IHS
Not for Resale

ARTICLE FC-8000
QUALITY ASSURANCE

Quality assurance shall conform to the requirements of Article AA-8000 and the following.

FC-8100 RESPONSIBILITY

The Manufacturer has the responsibility of providing all specified information and of assuring that the quality control, and detailed examination and tests required by this Code, are performed at the stages of construction necessary to permit them to be meaningful.

FC-8200 CERTIFICATE OF CONFORMANCE

The Certificate of Conformance shall include, but is not limited to, the following:

(a) The filter assembly has been designed in accordance with Article FC-4000.

(b) The materials of construction comply with Article FC-3000 and Appendix I.

(c) The filters have been qualified in accordance with FC-5100.

(d) The filters have been tested in accordance with FC-5200.

(e) Copies of all filter case material certifications if required by the purchasing documents.

(f) Copies of the production test results required in FC-5200.

(g) The filters have been packaged in accordance with Article FC-7000.

(h) Copy of certification in accordance with FC-5100.

Copyright ASME International
Provided by IHS under license with ASME
No reproduction or networking permitted without license from IHS
Not for Resale

ARTICLE FC-9000
NAMEPLATES

FC-9100 FILTER MARKING

Marking or labeling of each filter shall be on the top of the filter when the pleats are vertical, of such size and legibility that it can be read at a distance of 3 ft (0.9 m).

As a minimum, the following information shall be provided:

(a) Manufacturer's name or symbol

(b) model number

(c) serial number

(d) rated flow capacity

(e) direction of airflow for penetration and pressure drop tests

(f) pressure drop, in inches of water, at 100% rated flow

(g) overall penetration at rated flow

(h) overall penetration at 20% of rated flow

(i) UL label indicating successful testing per UL 586 if applicable

FC-9200 PACKAGE MARKING

Marking or labeling of each shipping container (carton containing one filter) shall be of such size and type that it can be read at a distance of 3 ft (0.9 m). As a minimum, the following information shall be provided:

(a) Manufacturer's name or symbol

(b) arrows and "This Side Up" indicating orientation for shipping and storage and "Fragile" in letters no less than $\frac{3}{8}$ in. (19 mm) high

(c) filter model number

(d) purchase order number or other identifying marking requested by purchaser

Copyright ASME International
Provided by IHS under license with ASME
No reproduction or networking permitted without license from IHS
Not for Resale

MANDATORY APPENDIX FC-I

FILTER MEDIA: FIRE-RESISTANT, HIGH EFFICIENCY

ARTICLE FC-I-1000 SCOPE

This Mandatory Appendix establishes requirements for the manufacture of high efficiency, fire-resistant, filter media for use in the construction of HEPA filters as described in Section FC. This Appendix supersedes and has been derived from the Military Specification MIL-F-51079D for Fire-Resistant, High Efficiency Filter Media.

Copyright ASME International
Provided by IHS under license with ASME
No reproduction or networking permitted without license from IHS
Not for Resale

ARTICLE FC-I-2000
REFERENCE DOCUMENTS

In addition to referenced documents in Article FC-2000, the following documents are applicable. Unless otherwise shown, the latest editions and/or addenda of the following specifications, standards, and handbooks are applicable to the extent specified herein.

A-A-203B-91, Paper Kraft Wateratec

L-P-378DGJ-73, Plastic Sheet and Strip, Thin Gauge, Polyolefin

FED-STD-191-78, Textile Test Methods

MIL-STD-129M-93, Marking for Shipment and Storage

MMM-A-250-76, Adhesive, Water-Resistant (For Closure of Fiberboard Boxes)

PPP-F-320-73, Fiberboard: Corrugated and Solid, Sheet Stock (Container Grade), and Cut Shapes

PPP-P-291-76, Paperboard, Wrapping and Cushioning

PPP-T-76C-76, Tape, Packaging Paper, (For Carton Sealing)

Publisher: Superintendent of Documents, U.S. Government Printing Office, Washington, DC 20402-9325

136-42-102-5B, Penetrometer, Filter Testing DOP Q127 Assembly

125-8-1, Indicator, Water Repellency Q101

Publisher: U.S. Army Chemical and Biological Defense Command, Edgewood Research, Development, and Engineering Center, Aberdeen Proving Ground, Maryland, 21010

Copyright ASME International
Provided by IHS under license with ASME
No reproduction or networking permitted without license from IHS
Not for Resale

ARTICLE FC-I-3000
REQUIREMENTS

FC-I-3100 FORM AND SIZE

FC-I-3110 FORM

The filter media shall be furnished in rolls. The medium shall be tightly and evenly wound on non-returnable fiber or paperboard cores with a minimum inside diameter of $3\frac{1}{16}$ in. ± $\frac{1}{8}$ in. (77.5 mm ± 3 mm) and a minimum wall thickness of $\frac{3}{8}$ in. (9 mm). Unless otherwise specified in the contract or purchase order, the roll diameter shall not exceed 25 in. (635 mm) in diameter.

FC-I-3120 SIZE

The width of the roll shall be specified at the time of procurement. The tolerance on the specified width shall be $+\frac{1}{4}$ in./–0 in. (+6 mm/–0 mm). The length of media on the roll shall be clearly marked on the outside of the roll. The length shall not include the first wrap around the core or the outermost wrap of the roll.

FC-I-3130 SPLICES

The location of splices within the rolls shall be marked with paper tabs of contrasting color extending from each end of the roll. The number of splices permitted per roll shall not exceed the whole number obtained by dividing the length of the roll in feet by 1000.

FC-I-3200 PHYSICAL AND CHEMICAL

FC-I-3210 AIRFLOW RESISTANCE

The pressure drop across the media shall not exceed 1.6 in. wg (0.4 kPa) with ambient temperature airflow through the media at a minimum velocity of 10 ft/min (3.2 m/min), when tested as specified in FC-I-4221.

FC-I-3220 TEST AEROSOL PENETRATION

The penetration of the media by test aerosol of 0.3 micrometer average particle size shall not exceed 0.03%, as determined by comparing upstream with downstream aerosol concentration with the air and aerosol mixture having the flow rate specified in FC-I-3210 when tested in accordance with FC-I-4221.

FC-I-3230 TENSILE STRENGTH

FC-I-3231 Tensile Strength and Elongation

The average tensile breaking strength of the media shall be not less than 2.5 lb/in. (45 kg/m) width in the machine direction, no less than 2.0 lb/in./ (36 kg/m) width in the cross direction, and the average elongation in both directions shall be no less than 0.5% at rupture when tested as specified in FC-I-4222(a).

FC-I-3232 Tensile Strength After Heated Air

The average tensile strength of the media shall be not less than 0.6 lb/in. (11 kg/m) width in the cross direction after exposure to heated air at 700°F ± 50°F in a forced draft oven for 5 min when tested as specified in FC-I-4221(b).

FC-I-3233 Wet Tensile Strength

The average wet tensile breaking strength of the media after being soaked for 15 min in water at room ambient temperature shall be not less than 1.0 lb/in. (18 kg/m) of width in the cross direction when tested as specified in FC-I-4221(c).

FC-I-3234 Tensile Strength After Gamma Irradiation

The average tensile strength of the filter media shall not be less than 1.0 lb/in. (18 kg/m) of width in either

Copyright ASME International
Provided by IHS under license with ASME
No reproduction or networking permitted without license from IHS
Not for Resale

the machine or cross direction after the media is exposed to gamma irradiation for an integrated dose of 6.0×10^7 to 6.5×10^7 rads at a dosage rate not to exceed 2.5 megarads per hour when tested as specified in FC-I-4222(d).

FC-I-3240 WATER REPELLENCY

FC-I-3241 Prior to Irradiation

The average water repellency of the filter media shall not be less than 20 in. wg (5 kPa) with no single value been less than 18 when tested as specified in FC-I-4223(a).

FC-I-3242 After Gamma Irradiation

The average water repellency of the filter media shall be no less than 6 in. wg (1.5 kPa) with no single value being less than 5 after the media is exposed to an integrated dose of 6.0×10^7 to 6.5×10^7 rads at a dose rate not to exceed 2.5 megarads per hour when tested in accordance with FC-I-4223(b).

FC-I-3250 ACIDITY

The pH of the media shall be between 6.0 and 8.0 when tested as specified in FC-I-4244.

FC-I-3260 THICKNESS

Media thickness shall be a minimum of 0.015 in. (0.381 mm) and a maximum of 0.040 in. (1.061 mm) when measured as specified in FC-I-4225.

FC-I-3270 COMBUSTIBLE MATERIAL

The combustible material in the filter media shall not exceed 7% by weight when tested as specified in FC-I-4226.

FC-I-3280 FLEXING CHARACTERISTICS

FC-I-3281 Flexing

The media shall show no tears, breaks, cracks, or fiber separation after it is drawn back and forth, five times, around a $^3/_{16}$ in. (4.8 mm) dia. mandrel and moving through an arc of at least 180 deg when tested as specified in FC-I-4227.

FC-I-3282 Test Aerosol Penetration

The penetration of the media by test aerosol of essentially 0.3 micron particle size when determined as stated in FC-I-3220 and specified in FC-I-4221 shall not exceed 0.03% after the media is drawn back and forth as required in FC-I-3281, when tested as specified in FC-I-4221.

FC-I-3300 WORKMANSHIP

The medium shall be free from contamination (foreign matter), thick or thin spots, wrinkles, and damage, such as tears, cracks, holes, abrasions, and punctures.

Copyright ASME International
Provided by IHS under license with ASME
No reproduction or networking permitted without license from IHS
Not for Resale

ARTICLE FC-I-4000
QUALITY ASSURANCE PROVISIONS AND REQUIREMENTS

FC-I-4100 RESPONSIBILITY FOR INSPECTION

FC-I-4110 SUPPLIER'S RESPONSIBILITY

Unless otherwise specified in the contract or purchase order, the supplier is responsible for the performance of all inspection requirements as specified herein.

FC-I-4120 OBJECTIVE EVIDENCE

The supplier shall provide objective evidence acceptable to purchaser that the requirements of Articles FC-I-3000 and FC-I-5000 have been satisfied.

FC-I-4200 QUALIFICATION

FC-I-4210 SAMPLE

A qualification sample of 10 linear ft (3.05 m), full width, shall be manufactured using the same methods, materials, equipment and processes as will be used during regular production.

FC-I-4211 Material Change

Any change in materials or source of materials after qualification shall require a new qualification sample.

FC-I-4212 Reverification of Qualification

Media shall be requalified at least every five years. Tests shall be performed and certified by an independent test facility.

FC-I-4220 TEST PROCEDURES

FC-I-4221 Airflow Resistance and DOP Smoke Penetration

Three test specimens shall be tested for airflow resistance and DOP smoke penetration at a flow rate of 1.1 cfm (32 L/min) using the Q127 DOP Filter Testing Penetrometer (Drawing 136-42-102-5B). The exposed test area of the specimens is 16 in.^{2} (100 cm^2).

FC-I-4222 Tensile Strength

FC-I-4222.1 Tensile Strength and Elongation. Ten test specimens, five taken in each direction, shall be tested for tensile strength and elongation in accordance with TAPPI Standard T494 except that the test specimens shall be 1 in. by 6 in. (25 mm by 152 mm, shear cut) and the jaw separation shall be 4 in. (10 cm). Use a motorized tensile testing machine that has a constant rate of elongation (see 6.7) and uses a flat jaw clamping device at a loading rate of 0.5 in. per min (13 mm/m) or at a loading rate that will complete the test in 10 sec ±2 sec, whichever is greater.

FC-I-4222.2 Tensile Strength After Heated Air. Four test specimens (6 in. by 6 in.; 15 cm by 15 cm) shall be subjected to heated air using a suitable commercial forced-draft oven, capable of allowing full-circulation of air to each test specimen. The test specimen shall be placed in the oven for five min after the temperature has reached 700°F. After the exposure, the specimen shall be removed from the oven and conditioned in accordance with TAPPI Standard T402. One test strip, 6 in. (15 cm) in cross direction and 1 in. (25 mm) wide, shall be shear cut from each test specimen and tested for tensile strength in accordance with FC-I-4222.1.

Copyright ASME International
Provided by IHS under license with ASME
No reproduction or networking permitted without license from IHS
Not for Resale

FC-I-4222.3 Wet Tensile Strength. Three test specimens 1 in. by 6 in. (25 mm by 152 mm) taken in the cross direction shall be submerged in water at a depth of 10 in. (25 cm) for 15 min, and then tested for tensile strength as specified in FC-I-4222.1.

FC-I-4222.4 Tensile Strength After Gamma Irradiation. Six test specimens 7 in. by 3 in. (178 mm by 76 mm), three with the 7 in. (178 mm) side in the machine direction and three with the 7 in. (178 mm) side in the cross direction, shall be exposed to irradiation in a ventilated chamber as specified in FC-I-3234. After exposure and conditioning, eight test strips 7 in. by 1 in. (178 mm by 76 mm) shall be shear cut, four with the 7 in. (178 mm) side in each direction. The tensile strength of each strip shall be determined in accordance with FC-I-4222.1.

FC-I-4223 Water Repellency

FC-I-4223.1 Prior to Gamma Irradiation. Three test specimen rectangles $2\frac{3}{4}$ in. by $5\frac{1}{2}$ in. (70 mm by 140 mm) shall be conditioned (4.2.3) and tested for water repellency using the Q101 Water Repellency Indicator (125-8-1). The two surfaces of each test specimen shall be identified as top and bottom. The specimen shall then be cut into two equal squares. The top surface of one square and the bottom surface of the other square shall be tested. The lesser of the two results shall be considered the water repellency of the specimen.

FC-I-4223.2 After Gamma Irradiation. Three test specimens 7 in. by 3 in. (178 mm by 76 mm) shall be exposed to irradiation in a ventilated chamber as specified in FC-I-3242. After exposure each test specimen shall be cut to form three test specimen rectangles $2\frac{3}{4}$ in. by $5\frac{1}{2}$ in. (70 mm by 140 mm) and tested in accordance with FC-I-4223.1.

FC-I-4224 Acidity

The pH of two specimens from each sample shall be determined in accordance with TAPPI uniform method UM-440.

FC-I-4225 Thickness

The thickness of the medium shall be determined in accordance with TAPPI Standard T411.

FC-I-4226 Combustible Material

The dried weight of the sample shall be recorded. The ash weight of the sample shall be determined as specified in TAPPI Standard T413.

$$\% \text{ combustible material} = \frac{\text{sample wt ash wt} \times 100}{\text{sample wt}}$$

FC-I-4227 Flexing Characteristics

FC-I-4227.1 Examination. Eight test specimens, cut 12 in. (0.3 m) long in the machine direction and 6 in. (15 cm) wide, shall be bent perpendicular to the machine direction over $\frac{3}{16}$ in. (5 mm) wide mandrel and drawn back and forth so that 10 in. (25 cm) of medium are drawn five times through an arc of 180 deg. Four specimens with the screen/wire side against the mandrel and four specimens with the felt side against the mandrel shall be flexed. Examine the flexed 10 in. (25 cm) section for compliance with FC-I-3281.

FC-I-4227.2 Test. After examination as specified in FC-I-4227.1, the center of each test specimen shall be tested for DOP penetration in accordance with the procedure of FC-I-4221 for compliance with FC-I-3282.

FC-I-4230 ACCEPTANCE/REJECTION CRITERIA

If a sample fails when tested as specified in FC-I-4220, the lot represented shall be rejected.

FC-I-4300 QUALITY CONFORMANCE INSPECTION

Each roll of media shall be examined for defects. Defects such as abrasions greater than $\frac{1}{4}$ in. (6 mm) diameter; cuts; holes; tears; punctures exceeding $\frac{1}{16}$ in. (1.6 mm); thick or thin spots greater than $\frac{1}{4}$ in. (6 mm) in diameter; burn holes, charring, or scorching from the drying operation; and deviations outside the width tolerance +1.4 in. (6 mm) are reasons for rejection.

Copyright ASME International
Provided by IHS under license with ASME
No reproduction or networking permitted without license from IHS
Not for Resale

ARTICLE FC-I-5000
PACKAGING AND SHIPPING

FC-I-5100 PACKAGING

Packaging shall conform to Level B of ASME NQA-2 suitable for storage under Level B of ASME NQA-2.

FC-I-5200 SHIPPING

Shipping of the media shall be undertaken to assure the quality of the product upon arrival at the purchaser. Shipping containers shall comply with the rules and regulations applicable to the mode of transport being utilized.

Copyright ASME International
Provided by IHS under license with ASME
No reproduction or networking permitted without license from IHS
Not for Resale

NONMANDATORY APPENDIX FC-A
DIVISION OF RESPONSIBILITY

This Nonmandatory Appendix is intended to identify the roles normally assumed by the organizations responsible for fulfilling Code requirements when not specifically addressed in an article or subarticle. These are guidelines to assist with Code compliance and are not to be construed as legal or contractual responsibilities unless so invoked by the Owner or designee.

TABLE FC-A-1000
DIVISION OF RESPONSIBILITY

FC-	Item	Responsible Party
3000	Materials	Engineer/Manufacturer
4100	Design	Manufacturer
4210	Penetration performance	Manufacturer
4220	Airflow performance	Manufacturer
4300	Structural analysis	Manufacturer
4310	Seismic data	Owner/Engineer
5100	Qualification testing	Independent test laboratory
5200	Production testing	Manufacturer
6000	Fabrication	Manufacturer
6210	Tolerance	Manufacturer
7000	Packaging, shipping, and storage	Manufacturer/Owner
8200	Quality assurance	Manufacturer
9000	Documentation	Manufacturer

Copyright ASME International
Provided by IHS under license with ASME
No reproduction or networking permitted without license from IHS
Not for Resale

SECTION FD
TYPE II ADSORBER CELLS

FD-1000	**Introduction**	380
FD-1100	Scope	380
FD-2000	**Referenced Documents**	381
FD-3000	**Materials**	382
FD-3100	Allowable Materials	382
FD-3200	Limits	382
FD-3300	Certification of Materials	382
FD-4000	**Design**	384
FD-4100	General Design	384
FD-4200	Technical Requirements	384
FD-4300	Structural Requirements	385
FD-5000	**Inspection and Testing**	386
FD-5100	Dimensional Inspection	386
FD-5200	Welding Inspection	386
FD-5300	Qualification Tests	386
FD-6000	**Fabrication**	388
FD-6100	Dimensions and Tolerances	388
FD-6200	Welding and Brazing	388
FD-6300	Filling	388
FD-6400	Cleaning	388
FD-7000	**Packaging and Shipping**	389
FD-7100	Packaging	389
FD-7200	Loading for Shipment	389
FD-7300	Storage	389
FD-7400	Containers	389

Copyright ASME International
Provided by IHS under license with ASME
No reproduction or networking permitted without license from IHS
Not for Resale

FD-8000 **Quality Assurance** 390
FD-8100 Documentation 390

FD-9000 **Nameplates and Certification** 391

Figure
FD-4100 Type II Adsorber Cell 385

Tables
FD-5332 Detector Sensitivity for Leak Test 387
FD-6100 Cell Dimensions and Tolerances 388

Mandatory Appendix
FD-I Calculation of Residence Time of Adsorber Cells 392

Nonmandatory Appendix
FD-A Division of Responsibility 393

Copyright ASME International
Provided by IHS under license with ASME
No reproduction or networking permitted without license from IHS
Not for Resale

ARTICLE FD-1000
INTRODUCTION

FD-1100 SCOPE

This section of the Code provides minimum requirements for the performance, design, construction, acceptance testing, and quality assurance for modular gas phase adsorber cells used in nuclear safety-related air or gas treatment systems.

FD-1110 PURPOSE

The purpose of this Code is to ensure that adsorbers used for nuclear safety-related air and gas treatment systems are acceptable in all aspects of performance, design, construction, and testing.

FD-1120 APPLICABILITY

The Type II adsorber unit is a single cell composed of 2 in. adsorber beds, access panel(s) for recharging, and a gasketed flange. Impregnated activated carbon is the commonly used adsorbent. However, other adsorbent media demonstrated to perform equal to or better than impregnated activated carbons that meet all specification requirements are allowable. This section does not include the integration of the Type II cell into a complete air cleaning system mounting frame. Seismic qualification of the mounting frame is provided in Section FG.

FD-1130 DEFINITIONS AND TERMS

The following terms have special meaning in the content of this section.

adsorber cell/cell: a modular container for an adsorbent, with provision for sealing to a mounting frame, which can be used singly or in multiples to build up a system of any airflow capacity.

baffle: a nonperforated member oriented substantially perpendicular to the direction of airflow, connected to a wall or divider of the cell, and having the purpose of preventing wall effects and channeling.

bed/adsorber bed: a layer of adsorbent contained between two perforated sheets spaced at a specified distance; also, the assembly of perforated and nonperforated members that comprises the volume into which the adsorbent is packed.

blank/blank area: a nonperforated area within the perforated portions of a perforated sheet or screen.

channeling: a flow of gas or vapor through passages or areas of lower resistance which may occur within a bed due to nonuniform packing, segregation, irregular sizes or shapes of granules, or displacement of granules by direct impingement of high-velocity air.

margin: an unperforated area at the side or end of, or around the perforated area of, a perforated sheet or screen.

mechanical leak: the measure of the direct leakage through metal parts of the cell or its gasket due to defects.

penetration: the exit concentration of a given gas from an air cleaning device, expressed as percentage of inlet concentration.

refrigerant-11: trichloromonofluoromethane in accordance with ANSI/ASHRAE 34-89.

refrigerant-12: dichlorodifluoromethane in accordance with ANSI/ASHRAE 34-89.

residence time: the calculated time that a contaminant gas or vapor remains in contact with the adsorbent at a specified volume flow rate, based on net unbaffled screen areas and thickness of the bed.

through bolt: a bolt or other fastener that passes through the adsorbent bed.

wall effect: partial gas stream bypass of the adsorbent which occurs along an unbaffled metal to adsorbent interface.

Copyright ASME International
Provided by IHS under license with ASME
No reproduction or networking permitted without license from IHS
Not for Resale

ARTICLE FD-2000
REFERENCED DOCUMENTS

Common application documents referenced in this Code section are detailed in Article AA-2000. When ASTM material specifications are specified, the equivalent ASME material specification may be substituted. Where the date is not cited, the latest revision shall be used.

ANSI/ASHRAE 34-89, Number Designation and Safety Classification of Refrigerants[1]

Publisher: American Society of Heating, Refrigerating and Air Conditioning Engineers (ASHRAE), 1791 Tullie Circle, NE, Atlanta, GA 30329

ASTM A 193, Specification for Alloy-Steel and Stainless Steel Bolting Materials for High-Temperature Service

ASTM A 194, Specification for Carbon and Alloy Steel Nuts for Bolts for High-Pressure and High-Temperature Service

ASTM A 240, Specification for Heat-Resisting Chromium and Chromium–Nickel Stainless Steel Plate, Sheet, and Strip for Fusion-Weld Unfired Pressure Vessels

ASTM A 276, Specification for Stainless and Heat-Resisting Steel Bars and Shapes

ASTM A 320, Alloy Steel Bolting Materials for Low-Temperature Service

ASTM A 380, Specification for Cleaning and Descaling Stainless Steel Parts, Equipment, and Systems

ASTM A 479, Specification for Stainless and Heat-Resisting Steel Wires, Bars, and Shapes for Use in Boilers and Other Pressure Vessels

ASTM D 1056-85, Specification for Flexible Cellular Materials — Sponge or Expanded Rubber

Publisher: American Society for Testing and Materials (ASTM), 100 Barr Harbor Drive, West Conshohocken, PA 19428-2959

[1] May also be obtained from American National Standards Institute, 25 West 43rd Street, New York, NY 10036.

Copyright ASME International
Provided by IHS under license with ASME
No reproduction or networking permitted without license from IHS
Not for Resale

ARTICLE FD-3000
MATERIALS

FD-3100 ALLOWABLE MATERIALS

FD-3110 ADSORBENT

The adsorbent material used in these cells shall be in full compliance with Section FF.

FD-3120 SCREENS

Screen material shall meet the requirements of ASTM A 240, Type 304. Perforation shall be round and arranged in standard IPA (International Perforators Association) Pattern No. 105; hole size diameter shall be 0.045 in. maximum; open area of the perforated portion of the screen shall be 35% ± 5%. Margins and blank areas shall be as specified in Article FD-4000.

FD-3130 CASING

Casing material shall meet the requirements of ASTM A 240 (Type 304). The material thickness shall be as stated in Article FD-4000. Handles, spacers, and baffles shall meet the requirements of ASTM A 240 or A 479 as appropriate.

FD-3140 GASKETS AND SEAL PADS

The material for these parts shall be a closed cell neoprene or silicone rubber sponge, Grade SCE-43E1 or SCE-44E1, in accordance with ASTM D 1056.

FD-3150 ADHESIVE

Adhesive used to splice gaskets or to fasten gasket to cell shall be compatible with gasket material and appropriate to intended application.

FD-3160 THREADED FASTENERS

Bolting material shall be in accordance with ASTM A 320, Grade B8; or A193, Grade B8. Nuts for use with this bolting material shall be in accordance with ASTM A 194, Grade 8.

FD-3170 RIVETS

When rivets are used for fabrication or attachment of fill ports, they shall be austenitic steel meeting the minimum requirements of Type 303. If there is a potential "mechanical leak" path, the rivets shall be closed-end type of construction.

FD-3200 LIMITS

Materials of construction for the Type II cell are limited to those materials herein specified. No caulking or sealing materials are allowed in the fabrication of these cells.

FD-3300 CERTIFICATION OF MATERIALS

Documentation for adsorbent media shall conform as specified in Section FF.

Certification for parts, material, and components shall be supplied to the purchaser as required below.

FD-3310 METAL PARTS

The cell manufacturers shall obtain certified test reports that the material, except for the handles, conforms to the appropriate standards of FD-3100. Handles serve an auxiliary function not critical to the performance of the cell.

Copyright ASME International
Provided by IHS under license with ASME
No reproduction or networking permitted without license from IHS
Not for Resale

FD-3320 GASKETS AND SEAL PADS

Certificate of Conformance to ASTM D 1056 is required for gaskets and/or seal pads.

FD-3330 ADHESIVE

No certification is required.

FD-3340 THREADED FASTENERS

Certificate of Conformance is required.

FD-3350 HARDWARE ITEMS (WASHERS AND RIVETS)

Certificate of Conformance is required.

Copyright ASME International
Provided by IHS under license with ASME
No reproduction or networking permitted without license from IHS
Not for Resale

ARTICLE FD-4000
DESIGN

FD-4100 GENERAL DESIGN

The cell shall consist of 2 in. thick (50.8 mm) minimum adsorbent beds in a modular unit as shown in Fig. FD-4100. Alternatively, the cell may be of a "wraparound" type, wherein all beds are perpendicular to direction of airflow.

The beds shall be enclosed by a nonperforated case on three sides (except for alternate design) and a faceplate on the fourth side. The cell shall be installed horizontally in a cabinetlike mounting frame to which the faceplate is clamped and sealed. Handles are provided on the front of the cell to facilitate handling and installation.

FD-4200 TECHNICAL REQUIREMENTS

FD-4210 DESIGN REQUIREMENTS

The cell shall meet the following specifications. When filled with sorbent, the cell shall have a minimum residence time of 0.25 sec at rated capacity of 333 cfm (9.43 m^3/min). The residence time shall be determined by the procedure in Mandatory Appendix I. The filled cell shall have a maximum airflow resistance of 1.25 in. wg (0.31 kPa) when tested at rated flow.

FD-4220 ADSORBER BED

(a) The adsorber bed shall consist of a volume bounded by perforated sheets and solid metal. Nowhere shall the adsorber bed be less than 2 in. (50.8 mm) thick. Adsorber frames shall be solid metal and perforated sheets shall be fastened to the solid metal by welding. A minimum of $\frac{1}{2}$ in. (12.7 mm) solid margin shall be provided at perforated sheet-to-solid side interface.

(b) Frame corners shall be welded to provide a seal. The beds shall have internal spacers extending the full width and depth of the bed, or other such means of maintaining bed thickness and minimizing distortion when the cell is filled. If spacers are used, they shall have $\frac{1}{2}$ in. ± $\frac{1}{16}$ in. (12.7 mm ± 1.6 mm) baffles to prevent channeling. If through bolts are used, a $\frac{1}{2}$ in. (12.7 mm) baffle, minimum, shall be provided.

FD-4230 CASE AND ASSEMBLY

(a) The case form shall be made from nonperforated sheet and shall be formed and assembled in such a manner that no bypassing of the adsorbent beds is possible.

(b) The faceplate shall be interlocked with or welded to the bed assemblies (if separate) in such a manner that no bypassing, wall effect, or channeling is possible under service conditions. It is not intended that the cell faceplate support the weight of the installed cell. Handles shall be formed, attached by welding, and finished so they present no hazard to personnel and do not interfere with clamping of the cell into its mounting frame. The faceplate may be either welded or bolted to the body assembly. If welded, a filling hatch shall be provided in the body of the cell. If bolted, a seal pad shall be provided between the faceplate and cell body to seal this interface and impose a pressure on the adsorbent bed. The seal pad may be attached to the faceplate with adhesive or may be held mechanically, and the outer edge of the seal pad may be extended to form the gasket for sealing the cell into its mounting frame. If seal pads are not used, a one-piece gasket or a gasket formed from four strips with interlocking keyhole or dovetail corners shall be used. Gaskets shall be $\frac{3}{4}$ in. (19.1 mm) wide and $\frac{1}{4}$ in. (6.4 mm) thick; all excess adhesive shall be removed from visible surfaces of the gasket before it dries. No caulking compounds or sealants shall be used in the manufacture and assembly of cells.

(c) The faceplate design shall provide a 1 in. (25.4 mm) wide clear edge for clamping as depicted in Fig. FD-4100 to interface with standard mounting frame design.

Copyright ASME International
Provided by IHS under license with ASME
No reproduction or networking permitted without license from IHS
Not for Resale

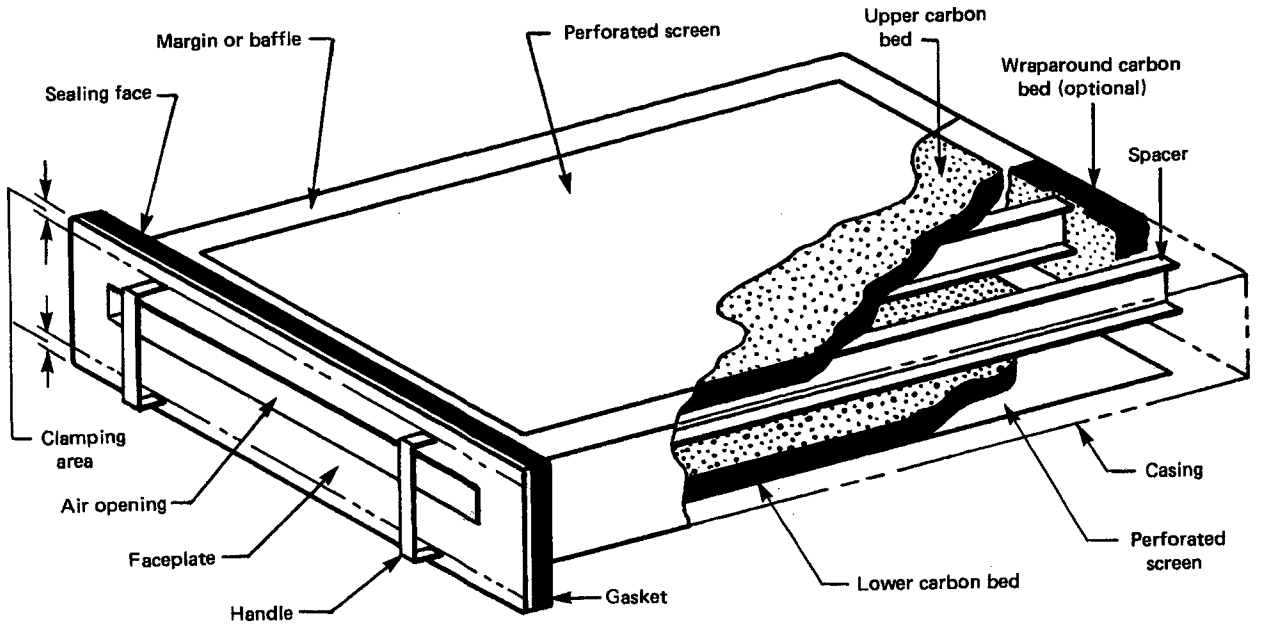

FIG. FD-4100 TYPE II ADSORBER CELL

FD-4300 STRUCTURAL REQUIREMENTS

FD-4310 GENERAL

The Type II cells shall be designed in accordance with the structural requirements given in Article AA-4000 or qualified by test in accordance with AA-4350.

FD-4320 LOAD DEFINITION

Loads to be considered in the structural design of the Type II adsorber cells defined in AA-4211 are as follows:

(a) Deadweight (DW) consists of the metal enclosure that contains the adsorbent, bolting integral to the cell, and the adsorbent media. Instrumentation and ancillary equipment attached to the cell are treated as external loads (EL).

(b) The pressure (NOPD) differential that must be considered is from the upstream to downstream side of the media bed. This differential is a maximum of 1.25 in. wg (0.31 kPa) at rated airflows.

(c) The seismic acceleration and response spectra (OBE and SSE) shall be as provided in the design specification. Additional dynamic loads (ADL) will also be provided by the design specification as applicable.

FD-4330 LOAD COMBINATIONS

Unless stated otherwise in the design specification, the applicable loading conditions noted in Table AA-4212 for Type II cells are as follows:

(a) Service Level A: DW + EL + NOPD

(b) Service Level B: DW + EL + NOPD + OBE

(c) Service Level C: DW + EL + NOPD + SSE + ADL

(d) Service Level D: not applicable

FD-4340 ACCEPTANCE CRITERIA

FD-4341 Design by Analysis

If designed by analysis, the acceptance criteria are as listed in Table AA-4321. The design stress values S shall be 0.6 S_y.

FD-4342 Qualification by Test

If qualified by test, the acceptance criteria are

(a) no structural damage shall be evident by visual examination

(b) airflow resistance and refrigerant leak requirements of FD-5330 shall be met

Copyright ASME International
Provided by IHS under license with ASME
No reproduction or networking permitted without license from IHS
Not for Resale

ARTICLE FD-5000
INSPECTION AND TESTING

Inspection and testing of the Type II cell shall conform to the requirements of this section and to specific requirements set forth in Article AA-5000.

FD-5100 DIMENSIONAL INSPECTION

Overall dimensions shall be inspected to determine conformance to drawing requirements. Each cell shall be inspected to assure it conforms to all dimensional requirements. Location and placement of stiffeners, supports, baffles, and handles shall be inspected to determine conformance to design requirements.

FD-5200 WELDING INSPECTION

FD-5210 SPOT WELDS

Spot welds shall be visually inspected in accordance with AA-6332.

FD-5220 OTHER WELDS

Fillet welds, butt welds, and seal welds shall be visually inspected in accordance with AA-6331.

FD-5300 QUALIFICATION TESTS

The cell design and filling method shall be qualified as outlined below. Equipment Manufacturer's requalification shall be required every 5 years and if there is any change in design, filling procedure, or the adsorbent's physical properties.

FD-5310 DESIGN QUALIFICATION

Four cells shall be selected at random, filled with sorbent of the specified mesh size by the proposed filling method (FD-6300), and hard-mounted in the cells' service orientation to a rough handling machine. This machine shall have sharp cutoff cams and be capable of vibrating the mounted cell at a frequency of 200 cycles per min at an amplitude of $\frac{3}{4}$ in. $\pm$ $\frac{1}{32}$ in. (19.05 mm $\pm$ 0.08 mm) for a minimum of 10 min. After vibration testing, the test cell shall be inspected and there shall be no broken welds or other physical damage as a result of this test.

FD-5320 FILLING METHOD QUALIFICATION

Four cells shall be selected at random, filled with an adsorbent of the specified mesh size and hardness using the proposed filling method. The test cells shall be hard-mounted to a rough handling machine oriented with the fill at the top, and vibrated for 10 min at a frequency of 200 cycles per min at an amplitude of $\frac{3}{4}$ in. (19.05 mm). After rough handling, the fill port(s) shall be opened and the level of adsorbent in the cell examined. The level shall not have dropped more than one-half of the baffler or margin width perpendicular to the adsorbent surface. Three cells with fill parts reinstalled shall be moved in the same orientation as rough handled to a test tunnel. Care must be taken to avoid disturbing the adsorbent granules. Each cell shall be leak-tested in accordance with FD-5332, except that the cell is oriented with filling port up. If any one of the cells leaks, it may be replaced with the remaining cell. If any one of the three cells finally tested leaks, or if loss of adsorbent or excessive settling of adsorbent occurs in any of the four cells, the filling procedure shall be judged not qualified and must be adjusted as necessary; the tests shall be repeated. Airflow resistance shall not increase by more than 20% as a result of rough handling when tested in accordance with FD-5331.

Copyright ASME International
Provided by IHS under license with ASME
No reproduction or networking permitted without license from IHS
Not for Resale

FD-5330 ACCEPTANCE TESTS

Each cell to be delivered to the purchaser shall be tested for airflow resistance and refrigerant leak test.

FD-5331 Airflow Resistance Test

Install cell in test tunnel in its service orientation and adjust airflow through cell to 333 scfm ± 17 scfm (9.43 m^3/min ± 5.18 m^3/min). Airflow resistance shall not exceed 1.25 in. wg (0.31 kPa). Cells that do not meet this criteria shall be rejected.

FD-5332 Refrigerant Leak Test

Install cell in test tunnel in its service orientation, and adjust airflow to 333 scfm ± 17 scfm (9.43 m^3/min ± 5.18 m^3/min). The cell shall be tested with one of the refrigerants shown in Table FD-5332 with an inlet concentration of not less than 10,000 times the minimum sensitivity of the instrument. The instrument shall have a minimum sensitivity of the value specified in Table FD-5332 and it shall be essentially insensitive to hydrocarbons.

The refrigerant injection port shall be located in such a manner as to ensure proper mixing of the refrigerant.

TABLE FD-5332
DETECTOR SENSITIVITY FOR LEAK TEST

Refrigerant	Minimum Sensitivity (vppm)
R-11	0.0005
R-12	0.05

The downstream test port shall be located in such a manner as to ensure that a representative sample is obtained. Qualification data verifying location of injection and test port shall be on file and available for inspection.

Performance of the test consists of operating the test tunnel at rated flow rate and injecting the chosen refrigerant continuously in a concentration conforming to the above requirements. When a single detector is used, at least three upstream and three downstream determinations shall be made at intervals of approximately 1 min. However, the first determination shall not be made prior to 30 sec after start of injection of refrigerant gas. During the test the downstream concentration of the refrigerant gas shall not exceed 0.001 times the upstream concentration. Cells that do not meet this requirement shall be rejected.

Copyright ASME International
Provided by IHS under license with ASME
No reproduction or networking permitted without license from IHS
Not for Resale

ARTICLE FD-6000
FABRICATION

The cells shall be fabricated using only those materials designated in Article FD-3000 and in accordance with the design outlined in Article FD-4000. All welding shall be in accordance with FD-6200. After manufacture, the cell shall be tested and inspected in accordance with Article FD-5000.

FD-6100 DIMENSIONS AND TOLERANCES

The cell shall conform to the requirements in Table FD-6100.

TABLE FD-6100
CELL DIMENSIONS AND TOLERANCES

Faceplate	Width, in. (mm)	$25\frac{3}{4} \pm \frac{1}{16}$ (654 ± 1.6)
	Height, in. (mm)	$7\frac{3}{4} \pm \frac{1}{16}$ (197 ± 1.6)
Body (Less Gasket)	Width, in. (mm)	24 + 0/–$\frac{1}{8}$ (610 + 0/–3.2)
	Height, in. (mm)	$6\frac{1}{4}$ + 0/–$\frac{1}{8}$ (160 + 0/–3.2)
	Depth, in. (mm)	30 (762), max.

GENERAL NOTES:
(a) Bed Thickness: 2 in. (50.8 mm) minimum between inside surfaces of screens of each bed.
(b) Bed Screen Displacement: ±$\frac{1}{8}$ in. (±3.2 mm) from manufacturing tolerance after cell is filled with adsorbent.

FD-6200 WELDING AND BRAZING

Procedure qualification, personnel qualification, and performance of welding and brazing during fabrication and installation shall be in accordance with AA-6300.

FD-6210 TESTING AND INSPECTION

Testing and inspection of welding and brazing utilized in fabrication and installation shall be performed in accordance with Article AA-6000.

FD-6220 REPAIRS

Weldments, brazements, or portions thereof that do not meet the acceptance criteria defined in Article AA-6000 shall be removed and rewelded or rebrazed in accordance with the original requirements.

Damaged gaskets shall be replaced. Damaged screens or material shall be replaced.

FD-6300 FILLING

Cells shall be filled with adsorbent specified by the purchaser using a filling method qualified in accordance with FD-5320. After filling, adsorbent fines shall be removed from the beds by blowing with clean, dry, oil-free compressed air or by vacuuming. After filling, each cell shall be tested in accordance with FD-5330.

FD-6400 CLEANING

Metal surfaces shall be cleaned and degreased in accordance with ASTM A 680 before any welding, installation of gaskets or seal pads, filling with adsorbent.

Copyright ASME International
Provided by IHS under license with ASME
No reproduction or networking permitted without license from IHS
Not for Resale

ARTICLE FD-7000
PACKAGING AND SHIPPING

FD-7100 PACKAGING

Each cell shall be individually wrapped and enclosed in a sealed plastic bag that is moisture and water-vapor resistant from −30°F to +140°F (−34.4°C to +60°C). The wrapped cell shall, in turn, be enclosed in a wood or heavy fiberboard carton with internal cushioning to dampen shock and vibration under accelerations up to 50 g. Cells shall be oriented in the carton or crate with screens horizontal. The cartons or crates shall be clearly marked with the legend "This Side Up" or similar imprint to ensure proper orientation of cartons and crates during handling, shipping, and storage.

FD-7200 LOADING FOR SHIPMENT

Cartons shall be banded to skids or pallets in the orientation specified in FD-7100. Wood separators and strapping protectors shall be provided between tiers of cartons and above the topmost cartons in the load. Sufficient strapping shall be used to prevent shifting of stacked cartons on the skid or pallet. Cells shall be stacked no higher than five tiers on a skid or pallet. Skids shall not be stacked more than two high unless bracing is provided to support the upper tiers to prevent damage to the bottom cells.

FD-7300 STORAGE

(a) Storage at all times (except during transit) shall be indoors in an area with

(1) ventilation

(2) minimum temperature of 40°F (4.4°C)

(3) maximum temperature of 120°F (48.9°C)

(4) minimum exposure to fume-producing materials or volatile organic solvents.

(b) Additionally

(1) Store filters in correct orientation (check marking arrows on cartons).

(2) Store filters in factory-packed cartons and do not remove until just prior to installation.

(3) Store filters such that tagging information is easily accessible.

FD-7400 CONTAINERS

The integrity of the packing container in general and the vapor container in particular should be maintained. Therefore, storage should not be near frequently traveled aisleways or corridors, near vibrating equipment, or among short-term storage items which require frequent personnel access. Care should be taken to avoid dropping or tipping of the storage containers.

Copyright ASME International
Provided by IHS under license with ASME
No reproduction or networking permitted without license from IHS
Not for Resale

ARTICLE FD-8000
QUALITY ASSURANCE

The Type II cell Manufacturer shall establish and comply with a quality assurance program and plan in accordance with Article AA-8000.

FD-8100 DOCUMENTATION

The following documentation shall be provided:

(a) table or drawing giving outline dimensions of the filter

(b) certified list of materials of construction

(c) adsorbent type with applicable test reports

(d) welder's qualification

(e) all qualification reports (seismic and filling method)

(f) certification of performance (resistance and leak test)

Copyright ASME International
Provided by IHS under license with ASME
No reproduction or networking permitted without license from IHS
Not for Resale

ARTICLE FD-9000
NAMEPLATES AND CERTIFICATION

(a) Each cell shall be legibly and permanently marked on the front of the faceplate or on a metal label affixed to the faceplate with the following information:

(1) Type II cell
(2) Manufacturer's name or symbol
(3) serial number
(4) month/year (of manufacture)
(5) empty weight

(b) Each cell shall bear a replaceable label with the following information:

(1) adsorbent Manufacturer's name or symbol
(2) adsorbent type and grade designation, lot, and batch
(3) filled weight
(4) adsorbent weight
(5) airflow resistance at specified airflow rating
(6) refrigerant leak test results
(7) date of filling

Copyright ASME International
Provided by IHS under license with ASME
No reproduction or networking permitted without license from IHS
Not for Resale

MANDATORY APPENDIX FD-I
CALCULATION OF RESIDENCE TIME OF ADSORBER CELLS

ARTICLE FD-I-1000
RESIDENCE TIME

Residence time, the theoretical time that the gas remains within the bed of the adsorber cell, at a specified airflow, by remaining in contact with the adsorbent, is calculated from the following equation:

Customary Units

$$T = \frac{t(A - B)}{28.8Q}$$

where

T = resident time, sec
t = thickness of bed, in.
A = gross screen area of all screens on inlet side or outlet side, whichever is smaller, in.^{2}
B = total area of baffles, blanks, margins of all screens, in.^{2}
Q = total cell volumetric airflow, cfm

SI Units

$$T = 3.6 \times 10^{-3} \frac{t(A - B)}{Q}$$

where

T = residence time, sec
t = thickness of bed, cm
A = gross screen area of all screens on inlet side or outlet side, whichever is smaller, cm^2
B = total area of baffles, blanks, margins of all screens, cm^2
Q = total cell volumetric airflow, m^3/h

Copyright ASME International
Provided by IHS under license with ASME
No reproduction or networking permitted without license from IHS
Not for Resale

NONMANDATORY APPENDIX FD-A
DIVISION OF RESPONSIBILITY

This Nonmandatory Appendix is intended to identify the roles normally assumed by the organizations responsible for fulfilling Code requirements when not specifically addressed in an article or subarticle. These are guidelines to assist with Code compliance and are not to be construed as legal or contractual responsibilities unless so invoked by the Owner or designee.

TABLE FD-A-1000
DIVISION OF RESPONSIBILITY

FD-	Item	Responsible Party
3000	Materials	Manufacturer/Owner
4000	Design	Manufacturer/Owner
5100	Physical testing	Manufacturer
5200	Radioactive testing	Manufacturer
5210	Qualification tests	Manufacturer
5220	Radioactive batch tests	Manufacturer
6000	Fabrication	Manufacturer
7100	Packaging and shipping	Manufacturer/Owner
7200	Storage	Owner
7300	Containers	Manufacturer/Owner
8000	Quality assurance	Manufacturer
8100	Documentation	Manufacturer
9000	Nameplate and certification	Manufacturer

Copyright ASME International
Provided by IHS under license with ASME
No reproduction or networking permitted without license from IHS
Not for Resale

SECTION FE
TYPE III ADSORBER CELLS

FE-1000	**Introduction**	396
FE-1100	Scope	396
FE-2000	**Referenced Documents**	398
FE-3000	**Materials**	399
FE-3100	Allowable Materials	399
FE-4000	**Design**	400
FE-4100	General	400
FE-4200	Technical Requirements	400
FE-4300	Adsorbent Bed Details	400
FE-4400	Structural Requirements	402
FE-4500	Adsorbent Handling Subsystems	402
FE-4600	Auxiliary Systems	403
FE-5000	**Inspection and Testing**	405
FE-5100	General	405
FE-5200	Visual Inspection	405
FE-5300	Dimensional Inspection	405
FE-5400	Welding Inspection	405
FE-5500	Fabrication Tolerances	405
FE-5600	Design Qualification	405
FE-5700	Acceptance Tests	406
FE-6000	**Fabrication and Installation**	407
FE-6100	General	407
FE-6200	Welding	407
FE-6300	Cleaning	407
FE-6400	Construction and Installation	407
FE-6500	Repairs	407
FE-7000	**Packaging and Shipping**	408
FE-7100	Type III Adsorbers	408
FE-7200	Adsorbent Materials	408

Copyright ASME International
Provided by IHS under license with ASME
No reproduction or networking permitted without license from IHS
Not for Resale

FE-8000 **Quality Assurance** 409
FE-8100 General 409
FE-8200 Inspection Reports and Documentation 409

FE-9000 **Nameplates** 410
FE-9100 Permanent Nameplates 410
FE-9200 Filling Label 410

Figure
FE-4110 Horizontal Section of Type III Adsorber Bed 401

Mandatory Appendices
FE-I Residence Time Calculation 411
FE-II Screen Waviness Inspection Test 412
FE-III Adsorber Filling Qualification Test Procedure 415
FE-IV Type III Adsorber Qualification Test Procedure 421

Nonmandatory Appendices
FE-A Visual Inspection Recommendations for Type III Adsorbers 428
FE-B Division of Responsibility 429

Copyright ASME International
Provided by IHS under license with ASME
No reproduction or networking permitted without license from IHS
Not for Resale

ARTICLE FE-1000
INTRODUCTION

FE-1100 SCOPE

This section of the Code provides minimum requirements for the performance, design, testing, construction, and quality assurance of gas phase adsorber units used in nuclear safety-related air or gas treatment systems.

FE-1110 PURPOSE

The purpose of this Code is to assure that adsorbers used for nuclear safety-related air and gas treatment systems are acceptable in all aspects of performance, design, construction, and testing.

FE-1120 APPLICABILITY

FE-1121 Type III Adsorbers

The Type III adsorber is a gas phase adsorber characterized as being a single assembly, fixed and rechargeable in place, with an adsorbent.

FE-1122 Adsorbents

Because impregnated activated carbon is commonly used as a gas phase adsorbent media, only this adsorbent is specifically referenced in this Code. However, other adsorbent media demonstrated to perform equal to or better than impregnated activated carbons for all specification requirements are allowable.

FE-1123 Limitations

This section is not intended to include the application of the Type III adsorbers to power plant condenser off-gas systems, noble gas delay systems, or ventilation systems for ordinary cooling or heating.

FE-1124 Responsibility

The responsibility for meeting each requirement of this section shall be assigned by the Owner or designee. Appendix FE-B contains a suggested division of responsibility as a guide.

FE-1130 DEFINITIONS AND TERMS

Definitions that have common application are contained in Section AA of the Code. The following terms have special meaning in the context of this section.

adsorber/adsorber unit: an assembly of beds, baffles, supporting structural members, and auxiliary equipment that removes contaminants from an airstream constrained to pass through the adsorber.

baffle: a nonperforated member connected to a wall or divider of the bed to prevent wall effects or channeling.

bed/adsorber bed: a layer of adsorbent contained between two perforated sheets spaced at a specified distance. Also, the assembly of perforated and nonperforated members that comprises the volume into which the adsorbent is packed.

blank/blank area: a nonperforated area within the perforated portions of a perforated sheet or screen.

channeling: a flow of gas or vapor through passages or areas of lower resistance which may occur within a bed due to nonuniform packing, segregation, irregular sizes or shapes of granules, or displacement of granules by direct impingement of high-velocity air.

margin: an unperforated area at the side or end of a perforated sheet or screen.

mechanical leak: the measure of the direct leakage through metal parts of the adsorber or its joints due to defects in materials or fabrication methods.

Copyright ASME International
Provided by IHS under license with ASME
No reproduction or networking permitted without license from IHS
Not for Resale

penetration: the exit concentration of a given gas from an air cleaning device, expressed as percentage of inlet concentration of the gas.

refrigerant-11: trichloromonofluoromethane in accordance with ANSI/ASHRAE 34-89.

refrigerant-12: dichlorodifluoromethane in accordance with ANSI/ASHRAE 34-89.

residence time: the calculated time that a contaminant gas or vapor remains in contact with the adsorbent at a specified volume flow rate, based on net unbaffled screen area and thickness of the bed (see Appendix FE-I).

wall effect: partial gas stream bypass of the adsorbent that occurs along an unbaffled metal to adsorbent interface.

Copyright ASME International
Provided by IHS under license with ASME
No reproduction or networking permitted without license from IHS
Not for Resale

ARTICLE FE-2000
REFERENCED DOCUMENTS

Common application documents referenced in this Code section are detailed in Article AA-2000. Where ASTM material specifications are specified, the equivalent ASME material specification may be substituted. Where the date is not cited, the latest revision shall be used.

ANSI/ASHRAE 34-89, Number Designation and Safety Classification of Refrigerants[1]

Publisher: American Society of Heating, Refrigerating and Air Conditioning Engineers (ASHRAE), 1791 Tullie Circle, NE, Atlanta, GA 30329

ASTM A 167, Specification for Corrosion Resisting Chromium Nickel Steel Plate, Sheet and Strip

ASTM A 182, Specification for Forged or Rolled Alloy Steel Pipe Flanges, Forged Fittings and Valves and Parts for High Temperature Service

ASTM A 193, Specification for Alloy Steel Bolting Material for High Temperature Service

ASTM A 194, Specification for Carbon and Alloy Steel Nuts for Bolts for High Pressure and High Temperature Service

ASTM A 213, Specification for Seamless Ferritic and Austenitic Alloy-Steel Boiler, Superheater, and Heat-Exchanger Tubes

ASTM A 240, Specification for Heat-Resisting Chromium and Chromium-Nickel Stainless Steel Plate, Sheet and Strip for Fusion-Weld Unfired Pressure Vessels

ASTM A 269, Specification for Seamless and Welded Austenitic Stainless Steel Tubing for General Service

ASTM A 276, Specification for Stainless and Heat-Resisting Steel Bars and Shapes

ASTM A 312, Specification for Seamless and Welded Austenitic Stainless Steel Pipe

ASTM A 320, Specification for Alloy-Steel Bolting Materials for Low Temperature Service

ASTM A 351, Specification for Seamless Austenitic Steel Castings for High Temperature Service

ASTM A 376, Specification for Seamless Austenitic Steel Pipe for High Temperature Central Station Service

ASTM A 403, Specification for Factory-Made Wrought Austenitic Steel Welding Fittings

ASTM A 479, Specification for Stainless and Heat-Resisting Steel Bars and Shapes for Use in Boilers and Other Pressure Vessels

ASTM A 511, Specification for Seamless Stainless Steel Tubing

ASTM A 554, Specification for Welded Stainless Steel Mechanical Tubing

ASTM D 903-49, Test Method for Peel or Stripping Strength of Adhesive Bonds (Revised 1983)

ASTM D 1056-85, Specification for Flexible Cellular Materials Sponge or Expanded Rubber

ASTM D 2000-80, Classification System for Rudder Products in Automotive Applications

ASTM D 2854-83, Test Method for Apparent Density of Activated Carbon

ASTM D 2862-82, Test Method for Particle Size Distribution of Granular Activated Carbon

Publisher: American Society for Testing and Materials (ASTM), 100 Barr Harbor Drive, West Conshohocken, PA 19428-2959

Designers, Specifiers, and Buyers Handbook for Perforated Metals

Publisher: Industrial Perforators Association (IPA), 5157 Deerhurst Crescent Circle, Boca Raton, FL 33486

[1] May also be obtained from American National Standards Institute, 25 West 43rd Street, New York, NY 10036.

Copyright ASME International
Provided by IHS under license with ASME
No reproduction or networking permitted without license from IHS
Not for Resale

ARTICLE FE-3000
MATERIALS

FE-3100 ALLOWABLE MATERIALS

FE-3110 ADSORBENT

Adsorbent materials used in Type III adsorbers shall be in compliance with Section FF of this Code.

FE-3120 SCREENS AND CASING

All material in contact with the adsorbent shall be stainless steel Type 304 or 304L.

FE-3130 GASKETS AND SEAL PADS

The material for these parts shall be closed-cell, ozone-resistant, neoprene or silicone rubber sponge Grade SCE-43E1 (or SCE-44E1) in accordance with ASTM D 1056.

FE-3140 OTHER COMPONENTS

Materials used in the fabrication of other components shall be selected in compliance with the following:

(a) stainless steel plate, sheet, and strip: ASTM A 240 or A 167

(b) stainless steel bar and structurals: ASTM A 276 or A 479

(c) stainless steel tubing: ASTM A 511, A 554, A 213, or A 269

(d) stainless steel pipe: ASTM A 312 or A 376

(e) stainless steel fitting: ASTM A 182, A 351, or A 403

(f) stainless steel bolting: ASTM A 193, A 194, or A 320

(g) adhesives: ASTM D 903

Copyright ASME International
Provided by IHS under license with ASME
No reproduction or networking permitted without license from IHS
Not for Resale

ARTICLE FE-4000
DESIGN

FE-4100 GENERAL

FE-4110 TYPE III ADSORBERS

Type III adsorbers are characterized as consisting of single or multiple beds of activated carbon (adsorbent), fixed in place, and sized to process a given volume of air or gas. The bed is fabricated, using perforated sheet and structural pieces, into a welded assembly. Air enters the upstream face of the bed, passes through the packed adsorbent and exits from the downstream face. Figure FE-4110 illustrates a typical horizontal section for a Type III filter bed.

FE-4120 ADSORBER SERVICE EQUIPMENT

The Type III adsorber is loaded with adsorbent by means of the adsorbent service equipment that interfaces with the service openings or ports on the adsorber bed. It provides the means of loading bulk granular adsorbent into the adsorber bed. The method of loading shall ensure that the bed is uniformly filled.

FE-4121 Adsorbent Removal Equipment

The adsorbent service equipment also provides the means for removing spent adsorbent from the Type III adsorber. The service equipment shall include the necessary separating/filter capacity to control safety and health hazards arising from handling of the adsorbent. The spent adsorbent shall be containerized as specified for disposal.

FE-4200 TECHNICAL REQUIREMENTS

FE-4210 DESIGN CRITERIA

Design criteria for the following parameters shall be specified:

(a) type of gas to be treated
(b) volumetric flow rate (scfm)
(c) design pressure (internal and external)
(d) pressure-time transients
(e) temperature (operating range)
(f) relative humidity (operating range)
(g) contaminants to be removed
(h) adsorbent type
(i) required adsorber performance efficiency
(j) face velocity and bed thickness of the adsorbent or
(k) face velocity and residence time (see Appendix FE-I)
(l) component integrated radiation dose
(m) minimum and maximum pressure differential across the adsorber unit
(n) corrosion effects of contaminant, process gases or other potential sources (i.e., impregnants or other chemicals)
(o) seismic requirements
(p) adsorbent sampling requirements (quantity and frequency)
(q) spent adsorbent handling requirements
(r) fire protection requirements

FE-4220 SIZING

Each adsorber unit shall be sized to provide the specified total volumetric flow and meet the performance requirements as specified in FE-4210(i) and (j) or (k).

FE-4300 ADSORBENT BED DETAILS

(a) Each bed section shall consist of perforated sheets, spaced uniformly to form the bed. The sheets shall be assembled to a formed, nonperforated frame by welding. The frame, or a nonperforated margin on the sheet, shall be of such width as to prevent bypass. Each bed shall have 1 in. (25.4 mm) minimum margins in order to prevent wall effect in the gas flow. Location and

Copyright ASME International
Provided by IHS under license with ASME
No reproduction or networking permitted without license from IHS
Not for Resale

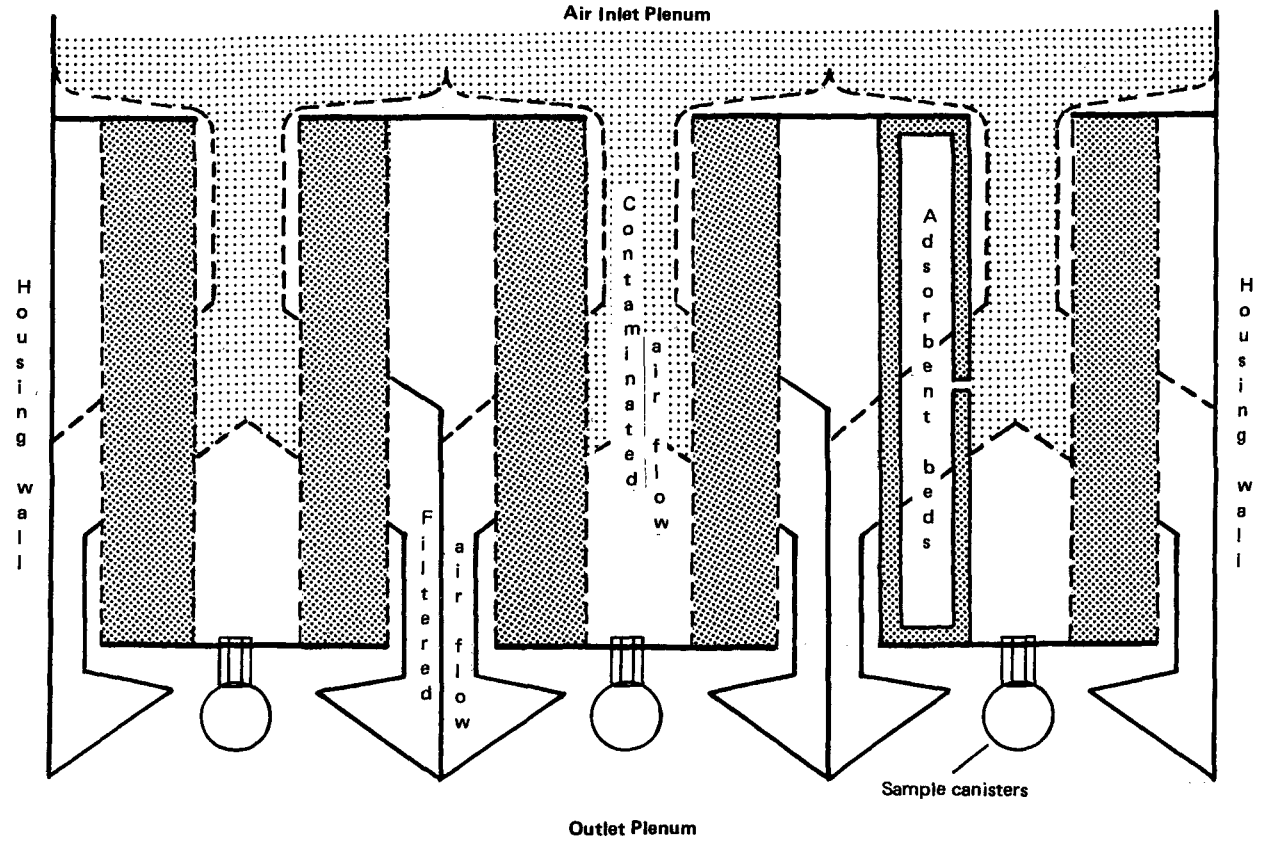

FIG. FE-4110 HORIZONTAL SECTION OF TYPE III ADSORBER BED

placement of spacers, stiffeners, and supports shall be designed to assure conformance to design requirements.

(b) The smooth side of the perforated sheet shall be in contact with the adsorbent.

(c) Caulking compounds or sealants shall not be used in the assembly of the beds or in the installation of the beds into the adsorber assembly.

(d) A reservoir of makeup adsorbent (to allow for settling) shall cover the entire top section of each bed. The reservoir shall have a minimum volume of adsorbent equivalent to 5% of the bed volume. The reservoir volume begins one design bed depth above the top perforation of any bed. Only that adsorbent above a bed that will flow freely into the bed shall be considered as part of the makeup reserve.

(e) The reservoir cover shall be designed to provide full access for filling and inspection. The reservoir cover shall have suitable handles and be secured to prevent gas leakage during normal operation. Gaskets shall conform to section FE-3130 and be compatible with the design criteria of FE-4210. Bolting patterns shall provide for uniform gasket compression in accordance with AA-4212.

(f) The adsorber unit shall be designed so that spent adsorbent can be removed and replaced. If vibration is required for fill/empty operations or to assure uniform packing density, the vibrator shall be an integral part of the design and shall not affect the structural integrity of the adsorber unit.

(g) Provision shall be made to allow drainage of accumulated liquids from the adsorber. Such drains shall be designed to retain the adsorbent within the adsorber. Drains shall have a positive shutoff design that will preclude bypass or leakage of contaminated

Copyright ASME International
Provided by IHS under license with ASME
No reproduction or networking permitted without license from IHS
Not for Resale

gases. Liquid drains shall be sized to accommodate the full flow rate of a fire deluge system if one is specified.

(h) Inspection and service openings shall be provided as necessary to allow access to the top of each adsorber section for visual examination and/or sample extraction.

FE-4400 STRUCTURAL REQUIREMENTS

FE-4410 GENERAL

The Type III adsorber shall be designed as a plate and shell type component using maximum stress theory in accordance with AA-4320 or by testing in accordance with AA-4350.

FE-4420 LOAD DEFINITION

Loads to be considered in the structural design of the Type III adsorber as defined in AA-4211 are as follows.

(a) Deadweight (DW) consists of the weight of the metal enclosure that contains the adsorbent, structural support members, all permanent hardware to service the bank and twice the expected adsorbent media. Instrumentation, test canisters, manifolds, and other like items shall be considered as external loads (EL).

(b) Normal operating pressure differential (NOPD) consists of the operating pressure across the bank from upstream to downstream of the adsorbent bed. This differential is normally a maximum of 0.62 in. wg (0.15 kPa) per inch of bed depth at rated flow.

(c) Seismic loads that are the result of either operating basis earthquake (OBE) or safe shutdown earthquake (SSE) shall be defined in the design specification. Additional dynamic loads (ADL), as required, will also be provided in the design specifications.

FE-4430 LOAD COMBINATIONS

The loading conditions (noted in Table AA-4212) for the Type III adsorber shall be defined as follows:

(a) Service Level A: DW + EL + NOPD

(b) Service Level B: DW + EL + NOPD + OBE

(c) Service Level C: DW + EL + NOPD + SSE + ADL

(d) Service Level D: not applicable

FE-4440 ACCEPTANCE CRITERIA

The allowable stress limits shall be calculated in accordance with Table AA-4321. Calculated design stress shall not exceed the allowable design stress of $S = 0.6S_y$.

FE-4500 ADSORBENT HANDLING SUBSYSTEMS

Adsorbent filling and emptying systems shall be designed as a compatible part of the Type III design.

FE-4510 ADSORBENT LOADING SYSTEM

FE-4511 Design

The adsorbent loading system shall be designed, tested, and qualified to meet the requirements of FE-4200. The design shall include provisions to receive, transport, and place bulk quantities of granular material with adequate containment of adsorbent fines. The design shall not adversely affect the particle size distribution of the adsorbent as discussed in Appendix FE-III. Design of this service equipment must take into consideration all operating conditions and requirements defined by the Owner. These should include access, toxicity of contaminants, and time required for changeout. Typical designs include pneumatic transfer systems and gravity feed hopper designs. Other methods which can be shown to meet the design criteria are also acceptable.

FE-4512 Loading

Loading systems shall provide for the uniform distribution and packing of adsorbent into the bed assembly. Packing characteristics of the loading system shall be demonstrated during qualification testing per FE-5620. Any design or process changes will require requalification.

FE-4513 Hoppers

Fill hopper designs shall match the adsorber service openings. Service opening to hopper connections shall include adequate seals or a containment system to control release of adsorbent fines.

Copyright ASME International
Provided by IHS under license with ASME
No reproduction or networking permitted without license from IHS
Not for Resale

FE-4520 ADSORBENT REMOVAL SYSTEM

Adsorbent removal connections from the adsorber beds shall be piped external to the filter housing and provided with a mechanically sealed, leak-tight closure system. The removal system or systems shall have a demonstrated capability for handling adsorbent that may be liquid saturated.

FE-4600 AUXILIARY SYSTEMS

FE-4610 ADSORBENT SAMPLING SYSTEMS

FE-4611 General

The Type III adsorber design shall include a means to obtain samples of the adsorbent. The preferred method is one which incorporates a set of sample canisters. Other methods or designs are acceptable if it can be shown (through Manufacturer's qualification testing) that they will provide representative sampling of the total bed thickness without introducing voids or bypass conditions.

FE-4612 Materials

Test canisters installed in adsorber units shall conform to the same material requirements as apply to the Type III adsorber.

FE-4613 Quantity

When test canisters are provided, there shall be a minimum of six canisters for each adsorber unit to support specified in-service testing.

FE-4614 Design Criteria

Test canister design shall be qualified in accordance with FE-5600. Test canisters shall be mounted such that the airflow is in a vertical direction and the effective flow rate is the same as the main bed. Canister bed depth, residence time, pressure drop, and the packing density of the canister adsorbent shall be the same as the adsorber. Filling methods shall be defined by the Manufacturer to ensure compliance with these requirements for initial and repeat filling operations. Documentation of qualification testing verifying compliance with these design criteria shall be provided.

FE-4615 Gaskets

The requirements for canister gaskets, seal pads, and adhesives shall be the same as those applying to other adsorber service openings.

FE-4620 FIRE PROTECTION

Fire protection is required and this function may be accomplished by any number of means, the simplest of which is to isolate the bed (stop the airflow, close all isolation dampers) and allow it to cool. Regardless of the type of fire protection system incorporated into the Type III adsorber, the Manufacturer shall provide a complete and comprehensive documentation package covering the proper care and response to fire conditions.

FE-4621 Temperature Sensors

Temperature sensors shall be installed in the gas stream, upstream and downstream of the Type III adsorber units. Detailed requirements are contained in Section IA.

FE-4622 Alternative Methods of Fire Detection

Other means of fire detection (CO, CO_2, smoke, or other types of detectors) which meet the reliability and sensitivity requirements of the system specification may be used. The active element(s) of any such system shall be properly located with respect to each bed to ensure coverage of the total bed as well as localized hot spots which may occur within the bed. This requirement can normally be satisfied by locating the detector in the gas stream, downstream of the adsorbent bed. Locating the sensor within the adsorbent bed is not permitted.

FE-4623 Fire Control Systems

FE-4623.1 Fire control systems for adsorbers are intended to limit the hazards associated with accidental ignition of the bed. Although infrequent, this may occur by internal heating or external causes (welding, etc.). In the event of ignition, control (and eventual cooling of the bed to less than 250°C) must be accomplished without release of significant contamination.

FE-4623.2 Fire control systems shall be designed and tested to demonstrate satisfactory performance under all anticipated accident situations. The design of the system shall consider not only the risk of fire, but shall also address such items as normal maintenance,

Copyright ASME International
Provided by IHS under license with ASME
No reproduction or networking permitted without license from IHS
Not for Resale

accidental initiation, isolation, containment, cleanup, repair, reconditioning, and recertification of the bed. The preferred design incorporates automatic sensing and alarm of incipient ignition coupled with a manual activation of the fire control system after verification of the fire.

FE-4623.3 Gaseous blanketing/purge systems (N_2, CO_2, halogen, etc.) designed to smother a fire are preferred. They shall be designed to have sufficient capacity to fill all connected housings and ductwork (up to any isolation dampers) without overpressurizing the filter system. They shall also provide for monitoring the system leakage and supplying makeup gas as needed.

FE-4623.4 Water deluge piping systems, which may be required by other codes or specifications, shall be designed to saturate the adsorber media throughout the adsorber assembly, including the reservoir. Piping material shall be Type 304 or 304L series stainless steel in accordance with FE-3100. The deluge pipe system shall terminate on the exterior of the adsorber assembly or other remote location where it can be manually connected to the water supply system. Manual safety shutoff valves shall provide for isolation of the system until such time as it is temporarily connected to the water supply system. Connection to the water system shall be through a standard hose or jumper fitting. The deluge design shall provide a minimum water flow rate of 3.2 gal/cfm of adsorbent. Adsorber catch basins and drain pipes inside the adsorber assembly shall be designed to accommodate the full flow rate of the deluge system and be routed to an adequate drain.

Copyright ASME International
Provided by IHS under license with ASME
No reproduction or networking permitted without license from IHS
Not for Resale

ARTICLE FE-5000
INSPECTION AND TESTING

FE-5100 GENERAL

This section establishes the minimum requirements for inspection and testing of Type III adsorbers. Certain individual inspection items may require completion prior to final assembly and should be identified in the Manufacturer's plan. Documentation of all results shall be provided as required by FE-8200.

FE-5200 VISUAL INSPECTION

Type III adsorbers shall be visually inspected to ensure conformance with the requirements of Article FE-4000. Inspection shall be documented in accordance with Article AA-8000. A suggested checklist for visual inspection is contained in Appendix FE-A.

FE-5300 DIMENSIONAL INSPECTION

The Type III adsorber shall be inspected to determine conformance to design drawings.

FE-5310 BED DEPTH

Measurements of the adsorbent bed depth, including the contributing effects of screen waviness, shall be made to determine that it conforms to design requirements.

FE-5320 SCREENS

All perforated or screen areas shall be inspected for screen waviness in accordance with Appendix FE-II. This inspection is to be performed at the subassembly level of the bed to ensure access to all screens and to determine that the "smooth" side contacts the adsorbent.

FE-5330 ADSORBENT RESERVOIR

The adsorbent reservoir shall be inspected to determine conformance to design requirements. Necessary measurements and volume calculations shall be included in the inspection report to demonstrate compliance with the design criteria.

FE-5400 WELDING INSPECTION

FE-5410 SPOT WELDS

Spot welds shall be inspected per AA-6332.

FE-5420 SEAL WELDS

Seal welds and structural welds shall be inspected per AA-6331.

FE-5500 FABRICATION TOLERANCES

Tolerances for the fabrication of the adsorber beds shall be in compliance with the requirements in Appendix FE-II.

FE-5600 DESIGN QUALIFICATION

The adsorber unit performance and filling method shall be qualified as outlined in the mandatory appendices. All qualification testing shall include the test canisters (if applicable) as an integral part of the adsorber unit design. Modular units, representative in all functional and dimensional aspects (i.e., full size), shall be used for testing. Requalification shall be required if there are any changes in design, filling procedure (i.e., feed rate, vertical fall, vibration), or adsorbent physical properties.

Copyright ASME International
Provided by IHS under license with ASME
No reproduction or networking permitted without license from IHS
Not for Resale

FE-5610 FUNCTIONAL DESIGN QUALIFICATION

The adsorber design shall be tested and qualified in accordance with Appendix FE-IV. Deviation from specified acceptance criteria shall be cause for rejection of design.

FE-5620 FILLING METHOD QUALIFICATION

The adsorber unit filling method shall be tested and qualified in accordance with Appendix FE-III. Failure to meet specified acceptance criteria shall cause the filling method to be adjusted as necessary; both the performance and filling test shall be repeated.

FE-5630 SEISMIC QUALIFICATION

Each design shall meet the Owner's specified seismic requirements. Seismic analysis/testing shall be performed to the requirements of Article AA-4000.

FE-5700 ACCEPTANCE TESTS

The completed adsorber unit shall be tested for acceptance in accordance with AA-5700 and this section of the Code.

Copyright ASME International
Provided by IHS under license with ASME
No reproduction or networking permitted without license from IHS
Not for Resale

ARTICLE FE-6000
FABRICATION AND INSTALLATION

FE-6100 GENERAL

The fabrication and assembly of Type III adsorbers shall be performed in accordance with Owner approved design drawings and industry standards.

FE-6200 WELDING

All welding and welder qualifications shall be in accordance with the requirements of AA-6300.

FE-6300 CLEANING

All surfaces shall be cleaned prior to acceptance. No halogen bearing materials nor carbon steel tools shall be used to clean the stainless steel surfaces. Cleaning shall be performed in accordance with the procedures contained in Article AA-6000 and the Manufacturer's written procedure.

FE-6400 CONSTRUCTION AND INSTALLATION

The Type III adsorber shall be seal welded into the air cleaning component housing. All seal welds shall be accessible for inspection and repairs once the beds are in place.

FE-6500 REPAIRS

Should the screen of a Type III adsorber be damaged or defective, repair procedures shall be developed by the Manufacturer. The repair of small tears or burn-through holes can be patched by welding a piece of perforated material (at least $\frac{1}{2}$ in. larger than the defect) over the defect. The perforations in the patch should be aligned with those in the base material. Precautions against damaging the base screen during welding (such as the use of a copper backup plate) shall be taken.

Copyright ASME International
Provided by IHS under license with ASME
No reproduction or networking permitted without license from IHS
Not for Resale

ARTICLE FE-7000
PACKAGING AND SHIPPING

FE-7100 TYPE III ADSORBERS

Packaging, shipping, and storage of Type III adsorbers shall be in accordance with ASME NQA-2 Level C criteria. Type III adsorbers shall not be shipped with adsorbent in place.

FE-7200 ADSORBENT MATERIALS

The requirements are detailed in Section FF and as specified by the Owner.

Copyright ASME International
Provided by IHS under license with ASME
No reproduction or networking permitted without license from IHS
Not for Resale

ARTICLE FE-8000
QUALITY ASSURANCE

FE-8100 GENERAL

Quality assurance shall be in accordance with Article AA-8000 of this Code. The Manufacturer of this equipment shall develop and maintain a QA program acceptable to the Owner and provide required documentation as requested.

FE-8200 INSPECTION REPORTS AND DOCUMENTATION

The inspection reports and other documents to be provided in the documentation package are as follows

(*a*) net bed area certification
(*b*) residence time calculations
(*c*) certificates of compliance on all materials
(*d*) certificate of conformance to this Code and purchase specifications
(*e*) nonconformance reports and resolutions
(*f*) qualifications reports (including type of adsorbent used)
(*g*) operational, maintenance, and repair manuals/procedures
(*h*) drawing package sufficient to support field testing, inspection, and repairs
(*i*) welder's qualification documentation

Copyright ASME International
Provided by IHS under license with ASME
No reproduction or networking permitted without license from IHS
Not for Resale

ARTICLE FE-9000
NAMEPLATES

FE-9100 PERMANENT NAMEPLATES

Each Type III adsorber shall be legibly and permanently marked with either a nameplate affixed to a wall or by metal stamping on the wall of the adsorber assembly. Such marking shall be done in a manner that is accessible and will not damage the structural integrity of the adsorber unit. The preferred location is on the downstream side of the adsorber. An additional nameplate shall be prepared and furnished for attachment to the exterior of the filter housing after final assembly.

The nameplate shall include the following information as a minimum:

TYPE III ADSORBER
MANUFACTURED IN ACCORDANCE WITH ASME CODE: (CODE NUMBER AND DATE)
BY: (MANUFACTURER'S NAME OR SYMBOL)
ADSORBER ASSEMBLY SERIAL NUMBER: _____
RATED FLOW CAPACITY OF ADSORBER: _____ scfm
DESIGN BED DEPTH: _____ in.
ADSORBENT BED VOLUME: _____ ft^3

FE-9200 FILLING LABEL

Each Type III adsorber shall be provided with a replaceable label to record the following information at the time of filling:

(*a*) adsorbent Manufacturer's name (and symbol if applicable)

(*b*) adsorbent type and grade designation, lot, and batch

(*c*) adsorbent density and weight of fill

(*d*) airflow resistance at specified airflow rating after filling

(*e*) refrigerant penetration test results of bed and canisters

(*f*) date of filling

(*g*) by whom filled

Test canisters shall be similarly labeled at the time of filling.

Copyright ASME International
Provided by IHS under license with ASME
No reproduction or networking permitted without license from IHS
Not for Resale

MANDATORY APPENDIX FE-I
RESIDENCE TIME CALCULATION

ARTICLE FE-I-1000
CALCULATION OF RESIDENCE TIME OF ADSORBERS

The residence time T is calculated for a specific application by the following:

$$T = \frac{t(A - B)}{K \cdot Q} \quad (1)$$

where

T = resident time, sec
t = thickness of bed, in.
A = gross screen area of all screens on inlet side or outlet side, whichever is smaller, in.^{2}
B = total area of baffles, blanks, margins of all screens, in.^{2}
K = conversion factor of (28.8), in.^{3} min/ft^3 sec
Q = total cell volumetric airflow, cfm

Copyright ASME International
Provided by IHS under license with ASME
No reproduction or networking permitted without license from IHS
Not for Resale

MANDATORY APPENDIX FE-II
SCREEN WAVINESS INSPECTION TEST

ARTICLE FE-II-1000
SCREEN WAVINESS

Screen waviness is a major concern for two reasons. Excessive waviness indicates too much variation in bed depth, and/or the minimum bed depth may be less than the design thickness.

Copyright ASME International
Provided by IHS under license with ASME
No reproduction or networking permitted without license from IHS
Not for Resale

ARTICLE FE-II-2000
PROCEDURE

Each section should be checked as follows:

(a) Lay a flat edge across the screen to identify any depressions of more than 5% of bed depth.

(b) Carefully note the associated low points and high points.

(c) Check both the low points and high points for bed depth using a bed depth probe. The bed depth probe is a small diameter rod that is sufficiently rigid yet will pass through the holes of the screen.

The length of the rod passing perpendicularly through the plane of one screen and touching the face of the opposite screen provides a measure of bed depth. The thickness of the screen may be neglected.

Copyright ASME International
Provided by IHS under license with ASME
No reproduction or networking permitted without license from IHS
Not for Resale

ARTICLE FE-II-3000
ACCEPTANCE CRITERIA

If the bed depth varies by more than ± of the design bed depth, the assembly is unacceptable and corrective action is required.

Copyright ASME International
Provided by IHS under license with ASME
No reproduction or networking permitted without license from IHS
Not for Resale

MANDATORY APPENDIX FE-III
ADSORBER FILLING QUALIFICATION TEST PROCEDURE

ARTICLE FE-III-1000
SCOPE

This procedure describes the method for determining the effectiveness of candidate filling methods for Type III adsorbers.

Copyright ASME International
Provided by IHS under license with ASME
No reproduction or networking permitted without license from IHS
Not for Resale

ARTICLE FE-III-2000
PURPOSE

The purpose of this procedure is to ensure that the filling method is qualified for a Manufacturer's design.

Copyright ASME International
Provided by IHS under license with ASME
No reproduction or networking permitted without license from IHS
Not for Resale

ARTICLE FE-III-3000

The filling method shall be qualified by the following procedures. The objective of qualifying the filling method is to ensure that the resulting as-filled density of the adsorbent meets the specifications of Section FF. To ensure this, the same adsorber unit tested under Appendix FE-IV shall be tested to show compatibility of design with fill method.

Copyright ASME International
Provided by IHS under license with ASME
No reproduction or networking permitted without license from IHS
Not for Resale

ARTICLE FE-III-4000
PROCEDURE

FE-III-4100 ADSORBENT CHARACTERISTICS

Before filling the Type III adsorber with the specified adsorbent, the apparent density and adsorbent size distribution of the adsorbent shall be determined by ASTM D 2854 and ASTM D 2862. At least one sample shall be taken from each drum for testing.

FE-III-4110 BED VOLUME

Calculate total bed volume, including bottom hopper and top reservoir. These calculations are to be based on approved production drawing dimensions, which have been verified by inspection measurements.

FE-III-4120 ADSORBENT WEIGHT

Charge the Type III adsorber with adsorbent, recording the weight of adsorbent used to fill the bed to its design level.

FE-III-4130 PARTICLE SIZE DISTRIBUTION

After the adsorber is filled, samples shall be taken from at least three different locations within each bed section (bottom, middle, and top). A determination of particle size distribution of each sample shall be made according to ASTM D 2862. The numbering of samples shall be large enough to provide a statistically significant distribution. The method of sample extraction shall be specified by the Manufacturer, and should provide repeatable sample results within ±5%.

FE-III-4200 PACKING DENSITY

The packing density of the bed shall be calculated as follows:

$$CP = \frac{W - L}{V_B} \quad (1)$$

where

CP = packing density, lb/ft^3
W = measured weight of adsorbent in the bed (less moisture content), lb
L = loss attributed to adsorbent fines or dusting, lb
V_B = measured bed volume, ft^3

FE-III-4300 ADSORBENT LOSSES

The filling process is a major contributor to the generation of dust or "adsorbent fines." These fines result from the breakdown of the adsorbent by abrasion or through mechanical handling. Excessive generation of fines may result in significant variation of the adsorbent size distribution from initial values. The weight of these fines (those that are easily extracted from the bed) must be subtracted from the bed weight to obtain a true value of the bed packing density.

Therefore, as part of the adsorber qualification, after filling, any visible fines shall be collected by vacuum cleaning the beds and other areas of collecting with a cleaning system incorporating a high efficiency filter (HEPA). In those systems using pneumatic transfer for filling, the transfer/dust separator filter may be used. The net change in weight of the HEPA filter shall be used as the weight of fines generated for use in eq. (1).

Copyright ASME International
Provided by IHS under license with ASME
No reproduction or networking permitted without license from IHS
Not for Resale

ARTICLE FE-III-5000
QUALIFICATION REPORTS

The following information shall be reported:

(*a*) the results of all calculations and tests

(*b*) a detailed filling procedure

(*c*) the feed rate of the adsorbent

(*d*) the adsorbent size distribution of the samples and their associated bed location

Copyright ASME International
Provided by IHS under license with ASME
No reproduction or networking permitted without license from IHS
Not for Resale

ARTICLE FE-III-6000
ACCEPTANCE CRITERIA

The following acceptance criteria shall apply:

(*a*) The packing density shall be within ±10% of the average density, per ASTM D 2854.

(*b*) Adsorbent size distribution shall be within ±5% of the adsorbent particle size distribution of the original samples (see FE-III-4100).

Copyright ASME International
Provided by IHS under license with ASME
No reproduction or networking permitted without license from IHS
Not for Resale

MANDATORY APPENDIX FE-IV
TYPE III ADSORBER QUALIFICATION TEST PROCEDURE

ARTICLE FE-IV-1000
SCOPE

This procedure describes a method for determining the effectiveness of Type III adsorbers in removing contaminants by ensuring that the entire bed contributes to the removal. Alternate methods that can be shown to accomplish the purpose of this procedure with acceptable results may be used with the agreement of all parties.

Copyright ASME International
Provided by IHS under license with ASME
No reproduction or networking permitted without license from IHS
Not for Resale

ARTICLE FE-IV-2000
PURPOSE

The purpose of this test procedure is to ensure that the adsorber bed design uniformly removes a gaseous contaminant from the airflow passing through the bed. This qualification procedure describes a method of challenging an adsorber bed wtih a stimulant until breakthrough occurs.

Copyright ASME International
Provided by IHS under license with ASME
No reproduction or networking permitted without license from IHS
Not for Resale

ARTICLE FE-IV-3000
THEORY

Activated carbon has an adsorptive capacity for many different contaminants, each with a different degree of retention. By choosing an adsorbate that is safe to handle as well as having the correct adsorption characteristics, an adsorption test can be run in a relatively short time.

For a fixed length (depth) adsorbent bed, the adsorbate distribution in the adsorbent bed after several periods of steady operation will follow a definite pattern that can be illustrated by the following discussion.

Curve 1 of Fig. FE-IV-3000 illustrates the adsorbent concentration in the adsorbent shortly after the start of the adsorption process in a fresh bed. The adsorbate concentration approaches zero in a relatively short distance downstream of the entry face. Theoretically, zero concentration is attained only at infinite bed length, but for practical purposes, concentrations of 0.01% of the inlet concentration, C_i, or lower are considered essentially zero, hence the ability of an adsorber to be effective with a finite bed length.

If the addition of adsorbate continues for an additional period, the adsorbate distribution curve could be illustrated in Curve 2.

This method of analysis of a carbon bed is on the following principles:

(a) that the distribution of the adsorbate within the bed is a function of depth, i.e., that the curve moves into the bed in a linear fashion;

(b) that the adsorbate/airflow through the bed can be interrupted and the bed media sampled such that the distribution is undisturbed;

(c) that this sample taken from the bed can be sliced into thin layers, starting at the inlet face and ending at the outlet face;

(d) that each slice can be tested for percent of saturation, i.e., for how much adsorbate it contains in relation to its saturation capacity (percentage of C_i);

(e) that the percentage of C_i versus the original position of the sample slice (depth) is representative of the adsorbate distribution curve.

As adsorption is continued, the distribution curve ultimately stops lengthening and reaches a steady state. Curve 3 shows the distribution curve when it has just attained saturation at the inlet face. Note that the major portion of the bed has essentially zero adsorbate. Curve 4 shows a condition when the 100% saturation zone L_S has moved into the bed some distance. The curve length L_Z in the direction of gas flow represents a complete (0% to 100%) saturation distribution curve and is called the adsorption mass transfer zone *MTZ*. At that point in the operation of the filter (total operating time), for all of the bed upstream of the *MTZ*. L_S, the adsorption and desorption rates are essentially equal and the L_S zone is at equilibrium (saturated) with the influent concentration C_i. If adsorption is continued, the *MTZ* ultimately breaks through the downstream face of the bed as illustrated by the lower end of Curve 5. Length L_Z has remained constant but L_S has increased.

The mass transfer zone can be calculated using eq. (1) and some experimental data for each bed design of interest.

$$tb = \frac{W_S dA}{FC_i} \times [Lt(1 - f)L_Z] \qquad (1)$$

where

tb = breakthrough time, time unit (sec, min, or hr)
Ws = adsorption capacity of adsorbent for contaminant, lb/lb of adsorbent
d = adsorbent bulk density, lb/ft^3
A = effective bed face area, ft^2

Copyright ASME International
Provided by IHS under license with ASME
No reproduction or networking permitted without license from IHS
Not for Resale

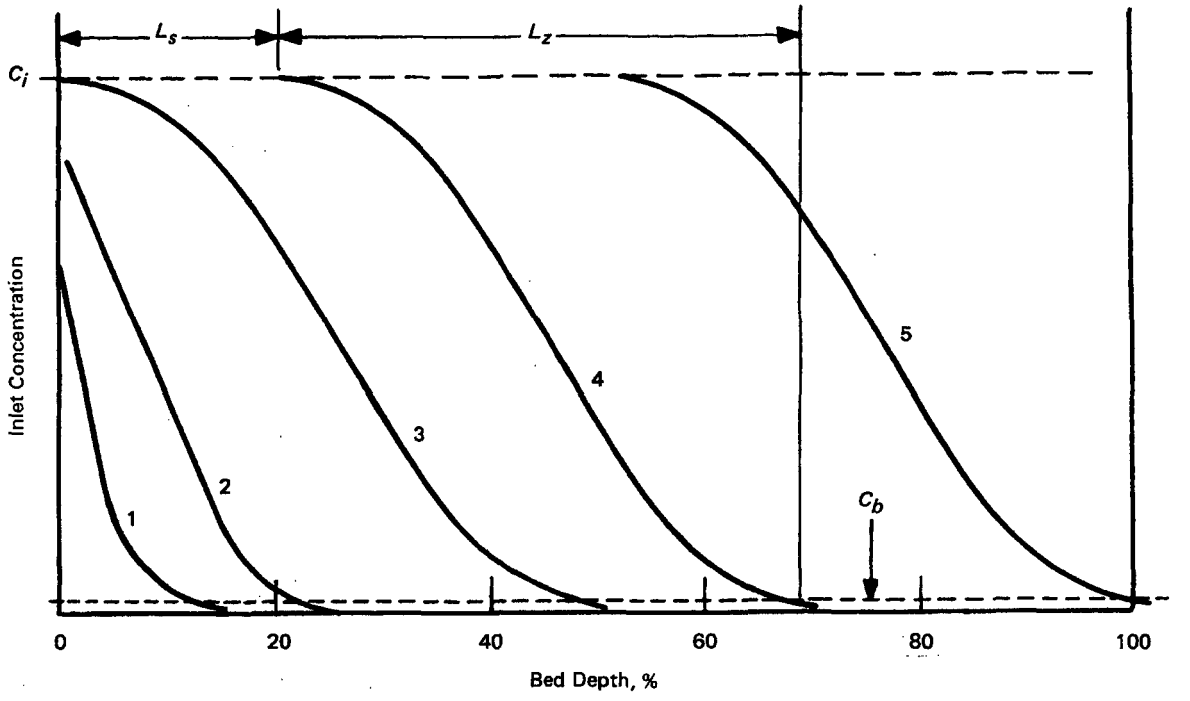

FIG. FE-IV-3000

Lt = total bed depth, in.
f = constant — depending on the allowable (desired) breakthrough concentration C_b for the selected simulant, 0.5 in the example using H_2O
L_z = length of *MTZ*, L_z in Fig. FE-IV-3000
F = mass flow rate, lb air/unit time
C_i = inlet contaminant concentration, lb/lb of air

NOTE: Equation (1) may be evaluated using any other system of consistent units.

This qualification method of challenging a bed with a selected contaminant until bed breakthrough first occurs (as illustrated by Curve 5 on Fig. FE-IV-3000) has proven to be reliable and safe. Samples are taken in the bed at a number of points where full saturation has not occurred and can be analyzed to get a graphic representation of the bed performance.

If the results of these measurements exceed the acceptance criteria, there are several possible causes. A careful analysis of the test setup should be made to ensure that the test results are valid. Evidence of damage or improper fabrication of the adsorber test section may be found. Finally, if all else fails, the filling method should be reviewed (Appendix FE-III). Any single factor or a combination may result in failure and must be corrected and the tests repeated before adsorber can be said to have met the qualification criteria.

Copyright ASME International
Provided by IHS under license with ASME
No reproduction or networking permitted without license from IHS
Not for Resale

ARTICLE FE-IV-4000
EXAMPLE

The following example and calculations illustrate the methods involved in arriving at the qualification of a 4 in. bed, using an inlet concentration of water vapor at 70% RH and analyzing the outlet for a minimum of 50% RH. At this RH, sufficient water will be absorbed to permit a chemical analysis of the activated carbon. It is estimated that *Lz* will be about 2 in., meaning 2 in. of the bed is unsaturated. Samples for analysis will be taken at the outlet adsorber screen.

FE-IV-4100 APPARATUS

Figure FE-IV-4100 shows the general test arrangement.

FE-IV-4200 TEST PROCEDURE

(a) Predetermine the moisture content of the adsorbent using ASTM D 2867.

(b) Fill the adsorber bed in accordance with the filling procedure.

(c) Assemble the test hardware in accordance with Fig. FE-IV-4100.

(d) Start up blower and adjust airflow volume to correct (rated) value using a calibrated orifice.

(e) Inject steam or water vapor into the main air stream at a rate to result in 70% ±5% RH in the flowing air.

FE-IV-4300 RH MEASUREMENT

An upstream sample is passed through a calibrated RH or dew point probe to determine that the upstream concentration is 70% ±5% RH.

FE-IV-4400 RH BREAKTHROUGH

Take periodic air samples downstream of the bed monitoring RH (or equivalent dew point) to determine when 50% RH breakthrough occurs.

FE-IV-4500 ADSORBENT SAMPLING

After breakthrough at 50% RH occurs, shut down the system. The adsorber cover is removed and the adsorbent is sampled (using a grain thief). Care must be taken to see that the adsorbent is not disturbed during sampling and that the sampling device is against the outlet screen when the sample is taken.

Samples are taken at three height levels and three width levels in each bed, representing nine equal zones of flow area. As the samples are taken, they are placed in sealed containers.

FE-IV-4600 MOISTURE CONTENT

Determine the moisture content of each adsorbent sample using ASTM D 2867.

Copyright ASME International
Provided by IHS under license with ASME
No reproduction or networking permitted without license from IHS
Not for Resale

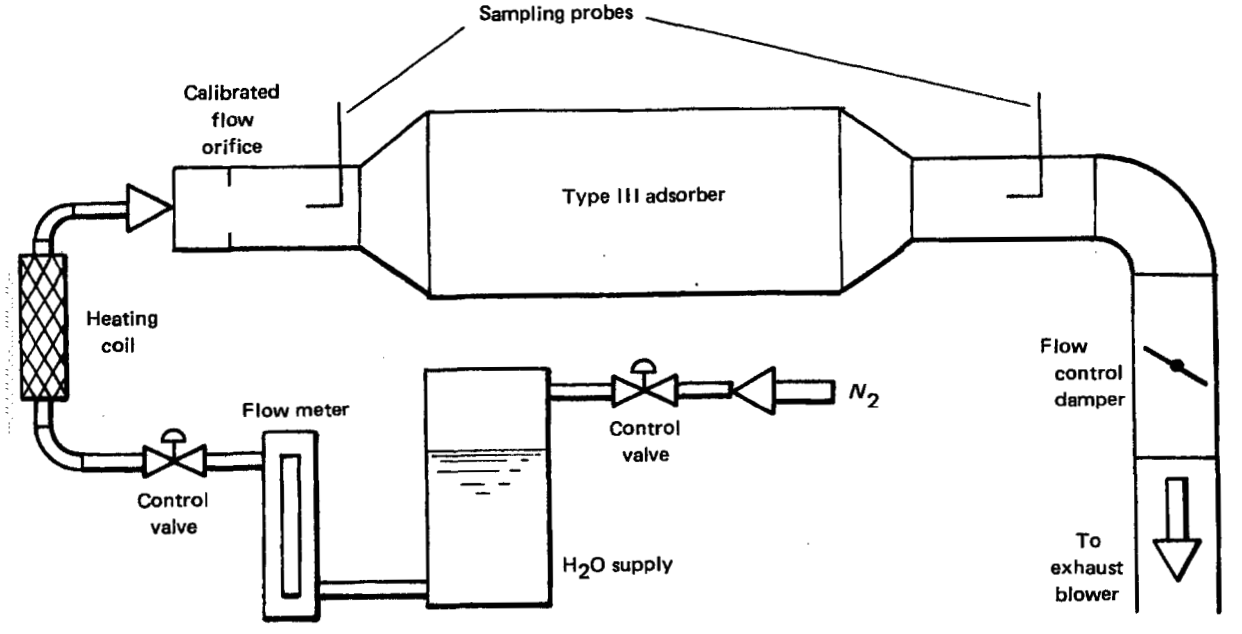

FIG. FE-IV-4100

Copyright ASME International
Provided by IHS under license with ASME
No reproduction or networking permitted without license from IHS
Not for Resale

ARTICLE FE-IV-5000
ACCEPTANCE CRITERIA

Results of laboratory sample analysis shall be within ±20% of each other or the flow pattern in this bed is unacceptable.

Copyright ASME International
Provided by IHS under license with ASME
No reproduction or networking permitted without license from IHS
Not for Resale

NONMANDATORY APPENDIX FE-A
VISUAL INSPECTION RECOMMENDATIONS FOR TYPE III ADSORBERS

ARTICLE FE-A-1000
GENERAL

The thorough inspection of Type III adsorbers is of paramount importance to ensure the successful application of this equipment to nuclear air cleaning systems. Because it is extremely difficult to effect repairs or other corrective actions after the adsorber is fabricated and installed into the filter housing, the location of each inspection point should be determined by the Owner in cooperation with the Manufacturer. In many cases, the required inspections cannot be completed until the adsorber system is installed within the air cleaning system and made operational. The following recommendations should be considered as the minimum requirements for inspection and should be supplemented as appropriate.

FE-A-1100 ADSORBER SECTIONS

(*a*) dimensions meet the design drawing requirements
(*b*) perforated areas are free of holes or tears
(*c*) seal welds are continous
(*d*) sheets are flat within tolerances
(*e*) structural supports meet design requirements

FE-A-1200 ADSORBER ASSEMBLY

(*a*) adsorber sections are seal welded to top and bottom hopper sections
(*b*) hopper sections meet the minimum capacity requirements
(*c*) final assembly is clean and free of obstructions

FE-A-1300 ADSORBER SERVICE SYSTEMS

(*a*) do not allow bypass of the adsorber sections
(*b*) have adequate isolation/shutoff valves to meet the leakage requirements

FE-A-1400 INSPECTION OPENINGS

(*a*) covers are adequately gasketed to meet leakage specifications
(*b*) closure/clamping systems provide required clamping forces
(*c*) provide visual access to all adsorber sections

FE-A-1500 LABELING

(*a*) meets the requirements of Article FE-9000 and other system requirements
(*b*) is visible after the adsorber section is installed in its intended housing

Copyright ASME International
Provided by IHS under license with ASME
No reproduction or networking permitted without license from IHS
Not for Resale

NONMANDATORY APPENDIX FE-B
DIVISION OF RESPONSIBILITY

This Nonmandatory Appendix is intended to identify the roles normally assumed by the organizations responsible for fulfilling Code requirements when not specifically addressed in an article or subarticle. These are guidelines to assist with Code compliance and are not to be construed as legal or contractual responsibilities unless so invoked by the Owner or designee.

TABLE FE-B-1000
DIVISION OF RESPONSIBILITY

FE-	Item	Responsible Party
4210	Design criteria	Engineer
4220	Sizing	Engineer/Manufacturer
4300	Adsorbent bed details	Manufacturer
4400	Loading conditions	Engineer/Owner
4500	Adsorbent handling system	Manufacturer
4610	Adsorbent sampling system	Manufacturer
4620	Fire control systems	Engineer/Manufacturer
5200	Visual inspection	Manufacturer/Owner
5300	Dimensional inspection	Manufacturer/Owner
5400	Welding inspection	Manufacturer/Owner
5600	Design qualification	Manufacturer
5700	Acceptance tests	Engineer/Manufacturer
5800	Documentation	Manufacturer
6000	Fabrication	Manufacturer
7000	Packaging and shipping	Manufacturer/Owner
8000	Quality assurance	Manufacturer/Owner
9000	Nameplates	Manufacturer

Copyright ASME International
Provided by IHS under license with ASME
No reproduction or networking permitted without license from IHS
Not for Resale

SECTION FF
ADSORBENT MEDIA

FF-1000	**Introduction**	431
FF-1100	Scope	431
FF-2000	**Referenced Documents**	432
FF-3000	**Materials**	433
FF-4000	**Design**	434
FF-4100	General Design	434
FF-4200	Adsorbent Degradation	434
FF-5000	**Inspection and Testing**	435
FF-5100	Physical Testing	435
FF-5200	Radioactive Testing	435
FF-5300	Acceptable ASTM Standards	436
FF-6000	**Fabrication**	437
FF-7000	**Packaging and Shipping**	438
FF-7100	Protection of Adsorbent Media	438
FF-7200	Storage	438
FF-7300	Containers	438
FF-8000	**Quality Assurance**	439
FF-8100	Documentation	439
FF-9000	**Nameplate and Certification**	440

Nonmandatory Appendix

FF-A	Division of Responsibility	441

Copyright ASME International
Provided by IHS under license with ASME
No reproduction or networking permitted without license from IHS
Not for Resale

ARTICLE FF-1000
INTRODUCTION

FF-1100 SCOPE

This section provides minimum requirements for the performance, design, acceptance testing, and quality assurance for adsorbent media used in air and gas cleaning systems in nuclear facilities.

FF-1110 PURPOSE

The purpose of this Code is to ensure that adsorbent media used in nuclear facilities for nuclear safety-related air and gas treatment systems are acceptable in all aspects of performance, design, and testing.

FF-1120 APPLICABILITY

This section shall be applied to the use of adsorbent media installed in nuclear safety-related atmospheric cleanup systems for the removal of radioiodine compounds during and after an accident.

This section does not include the filling of adsorbent media into adsorber units of any type, nor does it cover criteria for the adsorber units that hold the adsorbent media in place. Criteria are specified only for virgin adsorbents prior to installation and use; technical specifications should be referred to for in-place testing criteria and for periodic verification of adsorbent performance.

The specific testing procedures and acceptance criteria contained in this section were developed for activated carbon as the adsorbent medium. However, any adsorbent medium that can be demonstrated to perform equal to or better than activated carbon for the conditions specified herein shall be acceptable.

This section shall not be applied to activated carbon used in respirator or personnel gas masks, noble gas delay systems, or liquid radwaste treatment systems.

FF-1130 DEFINITIONS AND TERMS

The following terms have special meaning in the context of this section.

activated carbon: a family of carbonaceous substances manufactured by processes that develop adsorptive properties.

batch: a quantity of adsorbent, not to exceed 10 m^3 in size, of the same grade or type which has been produced under the same Manufacturer's production designation using a consistent manufacturing procedure and equipment, and which has been homogenized to exhibit the same physical properties and performance characteristics throughout its mass.

batch test: a test performed on a representative sample of each batch of manufactured adsorbent.

coimpregnants: two or more different impregnants fixed on the carbon in conjunction, to further enhance radioiodine removal properties.

grade or type: the Manufacturer's designation for an adsorbent having a given set of performance capabilities and physical properties, manufactured according to a fixed set of procedures.

impregnated activated carbon: a material which, after activation, is impregnated with a chemical compound or compounds to increase its ability to retain organic iodides, particularly at high temperatures and humidity condition. Typical impregnants include iodides such as potassium iodide and triiodide, amines such as triethylenediamine (TEDA), and combinations thereof.

lot: one or more batches of adsorbent that comprises and satisfies a purchase order.

qualification test: a test performed at least once every 5 years on three representative samples taken from a single batch of a Manufacturer's grade or type of adsorbent. This test qualifies the specific grade or type of adsorbent for all similar future uses for a period not to exceed 5 years.

virgin activated carbon: a material which has not seen service and has not been reactivated.

Copyright ASME International
Provided by IHS under license with ASME
No reproduction or networking permitted without license from IHS
Not for Resale

ARTICLE FF-2000
REFERENCED DOCUMENTS

The codes and standards referenced below shall supplement those documents listed in Section AA.

ASTM D 26S2-79, Standard Definitions of Terms Relating to Activated Carbon

ASTM D 2854-83, Test for Apparent Density of Activated Carbon

ASTM D 2862-82, Test for Particle Size Distribution of Granular Activated Carbon

ASTM D 3466-76, Test for Ignition Temperature of Granular Activated Carbon

ASTM D 3467-77, Test for Carbon Tetrachloride Activity of Activated Carbon

ASTM D 3802-79, Test for Determining Ball-Pan Hardness of Activated Carbon

ASTM D 3803-89, Standard Test Methods for Radioiodine Testing of Nuclear Grade Gas-Phase Adsorbents

ASTM D 4069-81, Standard Specification for Impregnated Activated Carbon Used to Remove Gaseous Radioiodines from Gas Streams

Publisher: American Society for Testing and Materials (ASTM), 100 Barr Harbor Drive, West Conshohocken, PA 19428-2959

Copyright ASME International
Provided by IHS under license with ASME
No reproduction or networking permitted without license from IHS
Not for Resale

ARTICLE FF-3000
MATERIALS

Adsorbents are included in atmospheric cleanup systems at nuclear facilities to remove radioactive gases, primarily radioiodine compounds, by adsorption. Since activated carbon is the primary adsorbent used, this Code deals with activated carbon.

Activated carbon manufactured from coconut shell raw material has been traditionally used. However, carbons manufactured from raw material such as wood, coal, or petroleum coke may be used provided they satisfy the requirements of this section. Only virgin material shall be acceptable. Reactivation of activated carbon for use in nuclear safety-related systems is not allowed.

Activated carbon designed for radioiodine removal is impregnated to enhance its ability to retain radioiodine, primarily at high humidities. Commonly used impregnants include iodine compounds such as potassium iodide and iodine, and amines such as triethylenediamine. This section does not distinguish between impregnants. Reimpregnation of carbon that has been in service or outdated impregnated carbon is permitted, but must be qualified in accordance with this section.

Copyright ASME International
Provided by IHS under license with ASME
No reproduction or networking permitted without license from IHS
Not for Resale

ARTICLE FF-4000
DESIGN

FF-4100 GENERAL DESIGN

The adsorbent media shall be a free-flowing granular substance capable of being used in Type II (see Section FD), Type III (see Section FE), or other approved mechanical structures constituting adsorber units. In some instances, an impregnant may be adsorbed onto the medium to increase the radioiodine removal capability, particularly at high humidity conditions. If activated carbon is specified as the adsorbent medium, the activation and impregnation processes are left to the discretion of the Manufacturer; the requirements contained in Article FF-5000 shall be applicable. If another adsorbent medium is proposed, it shall meet the minimum performance requirements outlined in Article FF-5000 to conform with this Article.

FF-4200 ADSORBENT DEGRADATION

The adsorbent is qualified to perform under the temperature and relative humidity conditions of FF-5210, Qualification Tests. Furthermore, system design criteria and parameters in other sections of ASME AG-1 provide the conditions under which the adsorbent operates.

FF-4210 DESORPTION

(a) Desorption is the reverse of the process of adsorption and is primarily a function of temperature. Temperature conditions which are outside the limits under which the adsorbent was qualified can cause desorption, or conversely, adsorption efficiency may be less than qualified values.

(b) If normal or abnormal operation of the system outside the qualification temperatures is desired, the Owner shall requalify the adsorbent media to the other operating conditions.

FF-4220 DEGRADATION

In addition to experiencing the process of desorption, adsorbent can degrade as a result of other adverse conditions. These conditions include but are not limited to the following:

(a) Operation at relative humidity conditions above the limits under which the adsorbent was qualified may result in adsorbent efficiencies less than qualified values.

(b) Spurious activation of the water deluge system may saturate the adsorbent with water and leach any adsorbed material, either impregnant or adsorbed gases, from the adsorption surfaces.

Copyright ASME International
Provided by IHS under license with ASME
No reproduction or networking permitted without license from IHS
Not for Resale

ARTICLE FF-5000
INSPECTION AND TESTING

This Article specifies the inspection and testing criteria applicable to activated carbon adsorbent media for use in engineered safety feature atmosphere cleanup systems. Article AA-5000 shall apply, with the additional guidance given below.

FF-5100 PHYSICAL TESTING

FF-5110 BEFORE IMPREGNATION

Each batch of activated carbon to be impregnated shall undergo a physical test for carbon tetrachloride activity in accordance with ASTM D 3467 to a minimum level of 60% prior to impregnation.

FF-5120 AFTER IMPREGNATION

Each batch of activated carbon that has been impregnated shall undergo the following physical tests after impregnation:

(a) A test of apparent density in accordance with ASTM D 2854 to a minimum level of 0.38 g/ml.

(b) A test of particle size distribution in accordance with ASTM D 2862 to satisfy the following ASTM E 11 series of screens:

(1) retained on No. 6: 0.1% max.
(2) retained on No. 8: 5.0% max.
(3) through No. 8, retained on No. 12: 60% max.
(4) through No. 12, retained on No. 16: 40% min.
(5) through No. 16: 5.0% max.
(6) through No. 18: 1.0% max.

(c) Ignition temperature shall be measured in accordance with ASTM D 3466 and shall be a minimum level of 330°C.

(d) Ball-pan hardness shall be measured in accordance with ASTM D 3802 and shall be a minimum level of 92%.

FF-5200 RADIOACTIVE TESTING

In addition to specifications for the physical properties of activated carbon, this Article also requires testing of the adsorbent with radioactive material to verify removal capabilities. Qualification tests are to be repeated at least once every 5 years, in accordance with ASTM D 4069. Batch tests are to be performed on each batch of material supplied, and as indicated in ASTM D 4069.

FF-5210 QUALIFICATION TESTS

Each grade or type of impregnated activated carbon shall be qualified at least once every 5 years by satisfying the following radioactive qualification tests.

FF-5211 Methyl Iodide Removal (Low Temperature)

Verify methyl iodide removal efficiency to be not less than 99.0% at 80°C and 95% relative humidity when tested in accordance with ASTM D 3803.

FF-5212 Elemental Iodine Removal

Verify elemental iodine removal efficiency to be not less than 99.9% at 30°C and 95% relative humidity when tested in accordance with ASTM D 3803.

FF-5213 Methyl Iodide Removal (High Temperature)

Verify methyl iodide removal efficiency to be not less than 98% at 130°C and 95% relative humidity when tested in accordance with ASTM D 3803 for carbon to be installed in primary containment cleanup systems.

Copyright ASME International
Provided by IHS under license with ASME
No reproduction or networking permitted without license from IHS
Not for Resale

FF-5220 RADIOACTIVE BATCH TESTS

In addition to the radioactive qualification tests, each batch of impregnated activated carbon shall undergo radioactive batch tests at the time of manufacture to verify that the batch has the same characteristics as the carbon sample which has been qualified.

FF-5221 Methyl Iodide Removal

Each batch of impregnated activated carbon shall be tested for methyl iodide removal efficiency at 30°C and 95% relative humidity in accordance with ASTM D 3803. The minimum acceptable efficiency level shall be 97%.

FF-5222 Elemental Iodine Retention

Each batch of impregnate activated carbon shall be tested for elemental iodine retention efficiency at 180°C in accordance with ASTM D 3803. The minimum acceptable efficiency level shall be 99.5%.

FF-5300 ACCEPTABLE ASTM STANDARDS

The inspection and testing requirements of FF-5100 and FF-5200 are not intended to supersede or replace the requirements of ASTM D 4069 for impregnated activated carbon, but the requirements are included in this Article for completeness. Any impregnated activated carbon that satisfies the requirements of ASTM D 4069 shall be considered to be in conformity with this Code.

Copyright ASME International
Provided by IHS under license with ASME
No reproduction or networking permitted without license from IHS
Not for Resale

ARTICLE FF-6000
FABRICATION

There are no established industry standards, procedures, or guidelines for the activation of carbon or the impregnation of activated carbon. Rather, these procedures are left to the Manufacturer. The acceptability of the Manufacturer's product shall be determined by satisfactory conformity of the product with the inspection and testing requirements of Article FF-5000.

Copyright ASME International
Provided by IHS under license with ASME
No reproduction or networking permitted without license from IHS
Not for Resale

ARTICLE FF-7000
PACKAGING AND SHIPPING

For packaging and shipping, Article AA-7000 shall apply, with the additional guidance given below.

FF-7100 PROTECTION OF ADSORBENT MEDIA

After the adsorbent has satisfied the requirements of FF-5200 and is ready for shipment, all packaging, shipping, and storage procedures shall ensure that the media do not degrade by any means (aging, abrasion) before use. Accordingly, the media shall be packaged, shipped, and stored in containers designed to minimize influx of vapors and protect the contents from the environment. Media shall be packaged, shipped, and received in accordance with the requirements of Level B items as specified in ASME NQA-2. Media shall be stored in the original shipping containers with the seals intact.

FF-7200 STORAGE

Storage at all times (except during transit) shall be indoors in an area with

(a) ventilation

(b) minimum temperature of 40°F

(c) maximum temperature of 120°F

(d) relative humidity less than 70%

(e) minimum exposure to fume producing materials or volatile organic solvents

(f) protection from mechanical shock and vibration

FF-7300 CONTAINERS

The integrity of the packing container in general and the vapor container in particular should be maintained; therefore, storage should not be near frequently traveled aisleways or corridors, near vibrating equipment, or among short term storage items that require frequent personnel access. Care shall be taken to avoid dropping or tipping the storage containers.

Copyright ASME International
Provided by IHS under license with ASME
No reproduction or networking permitted without license from IHS
Not for Resale

ARTICLE FF-8000
QUALITY ASSURANCE

The quality assurance requirements of Article AA-8000 shall apply to the Manufacturer of adsorbent media and to all contractors performing any of the medium testing or inspection functions for the Manufacturer, the Supplier, or the user.

FF-8100 DOCUMENTATION

The following documentation shall be provided:

(a) type of tests

(b) date performed

(c) procedure followed (by reference is acceptable)

(d) all test conditions (per ASTM D 3803)

(e) laboratory performing the tests

(f) test results

(g) identity and signature of person performing laboratory work

Copyright ASME International
Provided by IHS under license with ASME
No reproduction or networking permitted without license from IHS
Not for Resale

ARTICLE FF-9000
NAMEPLATE AND CERTIFICATION

Article AA-9000 nameplate and certification requirements shall apply, with the additional guidance given below. In addition to a shipping label, the following information shall be affixed to each shipping container:

(a) Manufacturer

(b) date of manufacture

(c) grade or type of adsorbent

(d) batch identification

(e) Purchaser's identification number.

This information shall be attached to the packing container in such a manner that it becomes an integral part of the container and shall not be removed until the adsorbent is used. All labels shall be of a material that allows the required information to remain visible and legible at all times during shipping and storage and until the media are completely used.

Copyright ASME International
Provided by IHS under license with ASME
No reproduction or networking permitted without license from IHS
Not for Resale

NONMANDATORY APPENDIX FF-A
DIVISION OF RESPONSIBILITY

This Nonmandatory Appendix is intended to identify the roles normally assumed by the organizations responsible for fulfilling Code requirements when not specifically addressed in an article or subarticle. These are guidelines to assist with Code compliance and are not to be construed as legal or contractual responsibilities unless so invoked by the Owner or designee.

TABLE FF-A-1000
DIVISION OF RESPONSIBILITY

FF-	Item	Responsible Party
3000	Materials	Manufacturer/Owner
4000	Design	Manufacturer/Owner
5100	Physical testing	Manufacturer
5200	Radioactive testing	Manufacturer
5210	Qualification tests	Manufacturer
5220	Radioactive batch tests	Manufacturer
6000	Fabrication	Manufacturer
7100	Packaging and shaping	Manufacturer/Owner
7200	Storage	Owner
7300	Containers	Manufacturer/Owner
8000	Quality assurance	Manufacturer
8100	Documentation	Manufacturer
9000	Nameplate and certification	Manufacturer

Copyright ASME International
Provided by IHS under license with ASME
No reproduction or networking permitted without license from IHS
Not for Resale

SECTION FG
MOUNTING FRAMES
CONAGT AIR-CLEANING EQUIPMENT
NUCLEAR SAFETY–RELATED EQUIPMENT

FG-1000	**Introduction**	444
FG-1100	Scope	444
FG-2000	**Referenced Documents**	445
FG-3000	**Materials**	446
FG-3100	Allowable Materials	446
FG-3200	Material Limitations	446
FG-4000	**Design**	449
FG-4100	General Design	449
FG-4200	Structural Requirements	449
FG-4300	Structural Design Analysis	449
FG-5000	**Inspection and Testing**	451
FG-5100	Dimensional Inspection	451
FG-5200	Alignment and Surface Finish	451
FG-5300	Weld Inspection	451
FG-5400	Coating Inspection	451
FG-6000	**Fabrication**	452
FG-6100	General	452
FG-6200	Welding	452
FG-6300	Clamping Devices	452
FG-6400	Cleaning	452
FG-6500	Coating	452
FG-7000	**Packaging and Shipping**	453
FG-8000	**Quality Assurance**	454

Copyright ASME International
Provided by IHS under license with ASME
No reproduction or networking permitted without license from IHS
Not for Resale

FG-9000 **Nameplates** 455

Table
FG-3100 Allowable Materials 447

Mandatory Appendices
FG-I HEPA Filter Mounting Frames 456
FG-II Type II Adsorber Cell Mounting Frames 458

Nonmandatory Appendix
FG-A Division of Responsibility 460

Copyright ASME International
Provided by IHS under license with ASME
No reproduction or networking permitted without license from IHS
Not for Resale

ARTICLE FG-1000
INTRODUCTION

FG-1100 SCOPE

This section of the Code provides the requirements for the design, construction, fabrication, inspection, testing, and quality assurance of high efficiency particulate air (HEPA) filter and Type II (tray type) adsorber cell mounting frames used in nuclear safety-related air and gas treatment systems.

FG-1110 PURPOSE

The purpose of this section is to ensure that HEPA filter and Type II adsorber cell mounting frames used in nuclear safety-related air and gas treatment systems are acceptable in all aspects of design and fabrication.

FG-1120 APPLICABILITY

This section of the Code does not include the integration of HEPA filter or Type II adsorber cell mounting frames into a complete air cleaning system, and does not include the design of HEPA filters or adsorber cells.

Copyright ASME International
Provided by IHS under license with ASME
No reproduction or networking permitted without license from IHS
Not for Resale

ARTICLE FG-2000
REFERENCED DOCUMENTS

The codes and standards listed below shall supplement those documents listed in Section AA.

Specification for Structural Joints Using A325 or A490 Bolts (1986)

Specification for Structural Steel Buildings (1989)

Publisher: American Institute of Steel Construction (AIS), 1 East Wacker Drive, Chicago, IL 60601-2001

Cold Formed Steel Design Manual, Specification for the Design of Cold Steel Structural Members (1986)

Publisher: American Iron and Steel Institute (AISI), 2000 Town Center, Suite 320, Southfield, MI 48075

Copyright ASME International
Provided by IHS under license with ASME
No reproduction or networking permitted without license from IHS
Not for Resale

ARTICLE FG-3000
MATERIALS

FG-3100 ALLOWABLE MATERIALS

Materials used in the construction of mounting frames shall conform to requirements of specifications for materials given in Table FG-3100.

FG-3200 MATERIAL LIMITATIONS

Tape, mastics, caulk, lubricants, and sealant materials are not allowed in the fabrication of mounting frames.

Copyright ASME International
Provided by IHS under license with ASME
No reproduction or networking permitted without license from IHS
Not for Resale

TABLE FG-3100
ALLOWABLE MATERIALS

ASTM Designator	ANSI Designator	Publication Title
Carbon Steel Plates and Sheets		
A 236		Structural Steel, Specification for,
A 283		Low- and Intermediate-Tensile Strength Carbon Steel Plats, Specification for,
A 284		Pressure Vessel Plates, Carbon Steel, Low and Intermediate Strength, Specification for,
A 366		Steel, Carbon, Cold-Rolled Sheet, Commercial Quality, Specification for,
A 414		Carbon Steel Sheet for Pressure Vessels, Specification for,
A 568		General Requirements for Steel, Carbon and High-Strength Low-Alloy Hot-Rolled Sheet, and Cold-Rolled Sheet, Specification for,
A 569		Steel, Carbon (0.15 Maximum Percent), Hot-Rolled Sheet and Strip, Commercial Quality, Specification for,
A 570		Hot-Rolled Carbon Steel Sheet and Strip, Structural Quality, Specification for,
A 611		Steel, Cold-Rolled Sheet, Carbon, Structural Quality, Specification for,
A 620		Steel, Sheet, Carbon Drawing Quality, Special Killed, Cold-Rolled, Specification for,
A 621		Steel Sheet and Strip, Carbon, Hot-Rolled, Drawing Quality, Specification for,
A 635		Steel Sheet and Strip, Heavy Thickness Coils, Carbon, Hot-Rolled, Specification for
A 659		Steel, Carbon (0.16 Maximum to 0.25 Maximum Percent), Hot-Rolled Sheet and Strip, Commercial Quality, Specification for,
Stainless Steel Plates and Sheets		
A 167		Stainless and Heat-Resisting Chromium Steel Plate, Sheet, and Strip, Specification for,
A 240		Heat-Resisting Chromium and Chromium-Nickel Stainless Steel Plate, Sheet, and Strip for Pressure Vessels, Specification for,
Galvanized Steel Plates and Sheets		
A 446		Steel Sheet, Zinc-Coated (Galvanized) by the Hot-Dip Process, Structural (Physical Quality), Specification for,
A 525		Steel Sheet, Zinc-Coated (Galvanized) by the Hot-Dip Process, General Requirements for, Specification for,
A 526		Steel Sheet, Zinc-Coated (Galvanized) by the Hot-Dip Process, Commercial Quality, Specification for,
A 527		Steel Sheet, Zinc-Coated (Galvanized) by the Hot-Dip Process, Lock-Form Quality, Specification for,
A 528		Steel Sheet, Zinc-Coated (Galvanized) by the Hot-Dip Process, Drawing Quality, Specification for,
A 591		Steel Sheet, Cold-Rolled, Electrolytic Zinc-Coated, for Light-Coating Mass Applications, Specification for,
A 642		Steel Sheet, Zinc-Coated (Galvanized) by the Hot-Dip Process, Drawing Quality, Special Killed, Specification for,
Carbon Steel Structural Members		
A 36		Structural Steel, Specification for,
A 106		Seamless Carbon Steel Pipe for High-Temperature Services, Specification for,
A 108		Steel, Bars, Carbon, Cold-Finished, Standard Quality, Specification for
A 500		Cold-Formed Welded and Seamless Carbon Steel Structural Tubing in Rounds and Shapes, Specification for,
A 501		Hot-Formed Welded and Seamless Carbon Steel Structural Tubing, Specification for,
A 575		Steel Bars, Carbon, Merchant Quality, M-Grades, Specification for,
A 576		Steel Bars, Carbon, Hot-Wrought, Special Quality, Specification for,

Copyright ASME International
Provided by IHS under license with ASME
No reproduction or networking permitted without license from IHS
Not for Resale

TABLE FG-3100
ALLOWABLE MATERIALS (CONT'D)

ASTM Designator	ANSI Designator	Publication Title
Stainless Steel Structural Members		
A 276		Stainless and Heat-Resisting Steel Bars and Shapes, Specification for,
A 312		Seamless and Welded Austenitic Stainless Steel Pipe, Specification for,
A 479		Stainless and Heat-Resisting Steel Wire, Bars and Shapes for Use in Boilers and Other Pressure Vessels, Specification for,
A 511		Seamless Stainless Steel Mechanical Tubing, Specification for,
A 554		Welded Stainless Steel Mechanical Tubing, Specification for,
Galvanized Steel Structural Members		
A 53		Pipe, Steel, Black and Hot-Dipped, Zinc-Coated Welded and Seamless, Specification for,
	C80.3	Electrical Metallic Tubing, Zinc-Coated
Stainless Steel Bolts and Nuts		
A 193		Alloy-Steel and Stainless Steel Bolting Materials for High-Temperature Service, Specification for,
A 194		Carbon and Alloy-Steel Nuts for Bolts for High-Pressure and High-Temperature Service, Specification for,
A 493		Stainless and Heat-Resisting Steel for Cold-Heading and Cold-Forging Bar and Wire, Specification for,
Carbon Steel Bolts and Nuts		
A 307		Carbon Steel Bolts and Studs, 60 000 psi Tensile Strength, Specification for,
A 325		High-Strength Bolts for Structural Steel Joints, Specification for,
A 449		Quenched and Tempered Steel Bolts and Studs, Specification for,
A 548		Steel Wire, Carbon, Cold-Heading Quality, for Tapping or Sheet Metal Screws, Specification for,
A 563		Carbon and Alloy Steel Nuts, Specification for,
	B18.21.1	Lock Washers
	B18.22.2	Plain Washers
Nonferrous Nuts		
F 467		Nonferrous Nuts for General Use, Specification for,
Coatings		
A 123		Zinc (Hot-Galvanized-Coatings) on Products Fabricated from Rolled, Pressed, and Forged Steel Shapes, Plates, Bars, and Strip, Specification for,
A 153		Zinc Coating (Hot-Dip) on Iron and Steel Hardware, Specification for,
B 633		Electrodeposited Coatings of Zinc on Iron and Steel, Specification for,
B 766		Electrodeposited Coatings of Cadmium, Specification for,

Copyright ASME International
Provided by IHS under license with ASME
No reproduction or networking permitted without license from IHS
Not for Resale

ARTICLE FG-4000
DESIGN

FG-4100 GENERAL DESIGN

The design and construction of mounting frames shall incorporate requirements for structural strength and rigidity, and sealing surface requirements to provide leak-tight individual positive clamping of HEPA filters and Type II adsorber cells to the mounting frames. Mounting frames shall be designed from structural welding to the housing wall, and for seal welding of adjoining members.

FG-4200 STRUCTURAL REQUIREMENTS

FG-4210 GENERAL

Mounting frames shall be designed in accordance with the structural requirements given in Article AA-4000. Additional structural requirements and load definitions specific to Type II adsorber mounting frames appear in FD-4300.

FG-4220 LOAD DEFINITION

FG-4220.1 Loads to be considered in the structural design of mounting frames are listed in AA-4211, with the following definitions:

deadweight (DW): the weight of the mounting frame members.

external load (EL): 100 lb (45 kg) for HEPA filters and 200 lb (91 kg) for Type II adsorber cells. These loads are based on wet weight of the HEPA filter and Type II adsorber cells.

normal operating pressure differential (NOPD): for Type II adsorber cells as defined in Table FC-5100, unless specified otherwise by the Owner in the design specification. The dirty-filter pressure drop value shall be stated in the design specification, with input from the Manufacturer.

FG-4220.2 System Operation Pressure Transient (SOPT) shall be provided in the design specification.

FG-4220.3 The seismic acceleration and response spectra (OBE and SEE) shall be provided in the design specification. Additional dynamic loads (ADL) and design pressure differential (DPD) may also be provided in the design specification.

FG-4230 LOAD COMBINATIONS

Unless stated otherwise in the design specification, the applicable loading conditions noted in Table AA-4212 for mounting frames are as follows:

(a) Service Level A: DW + EL + NOPD + SOPT

(b) Service Level B: DW + EL + NOPD + SOPT + OBE + ADL

(c) Service Level C: DW + EL + NOPD + SOPT + SSE + ADL

(d) Service Level D: not applicable

FG-4240 ACCEPTANCE CRITERIA

The acceptance criteria are listed in Table AA-4321. The stress design value, S, shall be caluclated as $0.6S_y$, where S_y is yield stress, as defined in Article AS-4000.

FG-4300 STRUCTURAL DESIGN ANALYSIS

The mounting frame shall be analyzed as a statically indeterminate lattice.

FG-4310 HEPA MOUNTING FRAME DEFLECTION LIMITS

The mounting frame should deflect no more than 0.0007 in. (0.18 mm) per inch (25.4 mm) span under a load equivalent to the EL plus NOPD for HEPA filters. The uniform frame loading due to NOPD is determined from the equation:

Copyright ASME International
Provided by IHS under license with ASME
No reproduction or networking permitted without license from IHS
Not for Resale

$$W_a = 0.036\,(1.5)\Delta p\,C \qquad (1)$$

where

W = uniform frame loading, lb/in.
0.036 = conversion factor, in. wg to psi
Δp = dirty-filter pressure drop across bank, in. wg
C = center-to-center spacing of filter on bank, in.

The value determined from eq. (1) and EL is used in standard beam equations to determine the minimum moment of inertia required. Based on the minimum moment of inertia required for the member, the size and shape is determined by analysis or can be selected given in the AISC Manual of Steel Construction.

FG-4320 TYPE II ADSORBER CELL MOUNTING FRAME DEFLECTION LIMITS

The mounting frame shall deflect no more than 00.007 in. per inch span under a load equivalent to the mounting weight when in a water flooded condition (empty cell weight plus double the dry carbon weight) plus 1.17 lb/in. (0.02 kg/mm) to account for NOPD. The load value is to be used in standard beam equations to determine the minimum moment of inertia required. Based on the minimum moment of inertia, the size and shape of the material can be determined by analysis or can be selected directly from the tables of structual shape properties given in the AISC Manual of Steel Construction.

FG-4330 IMPACT LOADING

In addition to flexural strength, the mounting frame shall also be capable of withstanding a shock loading of at least 3 psi across the bank without exceeding the elastic limit of the frame material. The section moduli given in Part 1 of the AISC Manual of Steel Construction shall be compared with the minimum values obtained from the following equation.

$$M = \frac{13\,L^2}{S} \qquad (2)$$

where

M = section modulus, in.^{3}
S = maximum allowable stress, psi
L = length of member, in.

The value obtained in eq. (2) shall be less than that determined in the AISC Manual.

Copyright ASME International
Provided by IHS under license with ASME
No reproduction or networking permitted without license from IHS
Not for Resale

ARTICLE FG-5000
INSPECTION AND TESTING

Inspection and testing of the HEPA filter and Type II adsorber mounting frames shall conform to the requirements of this section and to the general requirements in Article AA-5000.

FG-5100 DIMENSIONAL INSPECTION

Overall dimensions shall be inspected to determine conformance to Manufacturer's drawing requirements. Length and spacing of members shall be inspected such that the openings are within tolerance. See Appendices FG-I and FG-II for details.

FG-5200 ALIGNMENT AND SURFACE FINISH

The alignment of adjoining members shall be inspected, as well as the filter seating surface. Adherence to the following tolerances for HEPA filter and Type II adsorber cell mounting frames is required.

FG-5210 ALIGNMENT

perpendicularity: mounting frame adjoining members are to be perpendicular, with a maximum offset of $^{1}/_{64}$ in. (0.4 mm) per foot (305 mm) of frame member or $^{1}/_{16}$ in. (1.6 mm) deviation over the entire frame member length, whichever is greater.

planarity of adjoining members: adjoining members are to be aligned not to exceed $^{1}/_{64}$ in. (0.4 mm) at any point on the joint between the members.

FG-5220 FLATNESS

Each HEPA filter or adsorber cell seating surface shall be plane within $^{1}/_{16}$ in. (1.6 mm). The HEPA filter or adsorber cell seating surface is defined as a 1 (31.8 mm) perimeter around the HEPA filter or adsorber cell opening only. The entire mounting frame shall be plane with $^{1}/_{2}$ in. (12.7 mm) total allowance in any 8 ft × 8 ft (203 mm × 203 mm) area. Waviness not exceeding ± $^{1}/_{32}$ in. (0.8 mm) per 6 in. (152 mm) is permissible as long as the overall flatness is not compromised.

FG-5240 SURFACE FINISH

Filter seating surfaces — 125 μin. (0.003 mm) AA, maximum, in accordance with ANSI Standard B46.1. Pitts, roll scratches, weld splatter, and other surface defects within the sealing areas shall be ground smooth. After welding, ground areas shall merge smoothly with the surrounding base metal.

FG-5300 WELD INSPECTION

Seal and structural weld shall be inspected in accordance with AA-6300

FG-5400 COATING INSPECTION

Coating, when required, shall be inspected per AA-6500.

Copyright ASME International
Provided by IHS under license with ASME
No reproduction or networking permitted without license from IHS
Not for Resale

ARTICLE FG-6000
FABRICATION

FG-6100 GENERAL

The fabrication and assembly of the mounting frames shall be performed in accordance with approved design drawings.

FG-6200 WELDING

All welding procedures and welder qualifications shall be in accordance with the requirements of AA-6300.

FG-6300 CLAMPING DEVICES

Required bolt or stud size is 1/2-1/3-UNC or 5/8-11-UNC.

FG-6400 CLEANING

All surfaces shall be cleaned per Article AA-6000 prior to acceptance. No halogen bearing materials or carbon steel tools shall be used to clean frames constructed of stainless steel. Cleaning shall be performed in accordance with Manufacturer's written procedure.

FG-6500 COATING

Coating of the frames, if applicable, shall be in accordance with AA-6500.

Copyright ASME International
Provided by IHS under license with ASME
No reproduction or networking permitted without license from IHS
Not for Resale

ARTICLE FG-7000
PACKAGING AND SHIPPING

Packaging and shipping of mounting frames shall be in accordance with ASME NQA-2 Level D Criteria if shipped by themselves. Mounting frames installed by the unit manufacturer in an air filtration unit shall be packaged and shipped in accordance with the level assigned to the unit. See Article AA-7000 for general requirements.

Copyright ASME International
Provided by IHS under license with ASME
No reproduction or networking permitted without license from IHS
Not for Resale

ARTICLE FG-8000
QUALITY ASSURANCE

The mounting frame manufacturer shall establish and comply with a quality assurance program that complies with Article AA-8000.

Copyright ASME International
Provided by IHS under license with ASME
No reproduction or networking permitted without license from IHS
Not for Resale

ARTICLE FG-9000
NAMEPLATES

The following information, as a minimum, shall be permanently marked on an accessible on-sealing surface of the mounting frame:

TYPE OF FRAME BY: (Manufacturer's name or symbol)

FRAME SERIAL NUMBER: (or other identification)

PURCHASE ORDER NUMBER:

YEAR OF MANUFACTURE:

This does not apply to frames installed as integral parts of air handling units or ducts.

Any other stampings necessary shall be specified in the design specifications.

Copyright ASME International
Provided by IHS under license with ASME
No reproduction or networking permitted without license from IHS
Not for Resale

MANDATORY APPENDIX FG-I
HEPA FILTER MOUNTING FRAMES

ARTICLE FG-I-1000
HEPA FILTER MOUNTING FRAMES

A typical HEPA filter mounting frame is shown in Fig. FG-I-1000.

FG-I-1100 HEPA FILTER MOUNTING FRAME DIMENSIONS

A minimum frame width of 4 in. (102 mm) is required for major and cross members of face sealed HEPA filter frames. This allows a 1 in. (25 mm) wide filter seating surface to compensate for any misalignment of the filter during installation, and allows a 2 in. (51 mm) space between filters horizontally and vertically, to give adequate room for clamping, handling, for use of power tools, or torque wrenches during filter change, and for manipulating a test probe between the units. The openings for HEPA filters shall be square within $^{1}/_{16}$ in. (1.6 mm) and shall be 2 in. (51 mm) smaller than the filter size. Reference Section FC, Table FC-4110 for filter sizes.

FG-I-1200 HEPA FILTER CLAMPING

HEPA filters are to be clamped with at least four pressure points. Each cell is to be independently clamped. The clamping device shall be designed with a factor of safety of four at the required gasket compression load. If the filters are gasketed, the clamping shall produce a uniformity of gasket compression of 65% + 15%.

FG-I-1210 GALLING PREVENTION

Threaded surfaces in the region of clamping device movement shall be lubricated with a chemically compatible lubricant to prevent galling, as specified in the design specification, or the clamping device nuts shall be of a dissimilar metal that is environmentally and structurally compatible with the threaded surface.

FG-I-1300 FILTER SUPPORT

Supports or cradles are required for HEPA filters to facilitate installations. The supports shall permit inspection of the filter-to-frame interface when the filter is installed.

FG-I-1400 PENETRATIONS

No penetration of HEPA filter mounting frames is allowed.

Copyright ASME International
Provided by IHS under license with ASME
No reproduction or networking permitted without license from IHS
Not for Resale

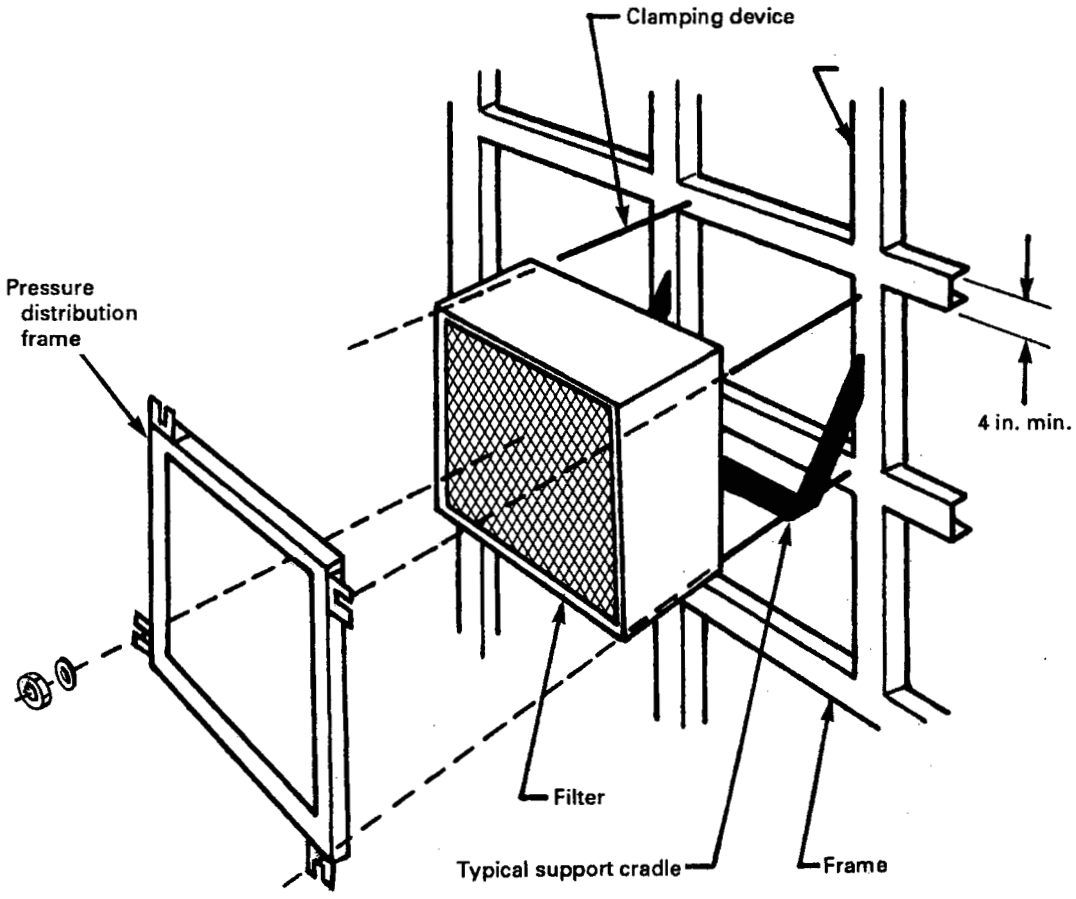

FIG. FG-I-1000 TYPICAL HEPA FILTER MOUNTING FRAME

Copyright ASME International
Provided by IHS under license with ASME
No reproduction or networking permitted without license from IHS
Not for Resale

MANDATORY APPENDIX FG-II
TYPE II ADSORBER CELL MOUNTING FRAMES

ARTICLE FG-II-1000
MOUNTING FRAME DIMENSIONS

For a typical Type II adsorber cell mounting frame, reference Fig. FG-II-1000.

Mounting frame dimensions for installing Type II adsorber cells shall be as follows:

(a) Openings: $6\frac{3}{8}$ in. × $24\frac{1}{8}$ in. ($+\frac{1}{8}/-0$) [162 mm × 614 mm (+1.7/–0)]

(b) Space between openings: vertical 4 in. (102 mm), min.

FG-II-1100 CLAMPING

Type II adsorber cells are to be clamped with at least four pressure points. Major requirements for filter clamping systems are magnitude and uniformity of clamping. Each cell is to be independently clamped. The clamping device shall be designed with a factor of safety of four at the required gasket compression of 65% +15% of the average original gasket thickness. Clamping shall be accomplished in the first $3\frac{1}{2}$ in. (89 mm) of the right and left sides of the adsorber face plate and within 1 in. (25 mm) of the top and bottom edge of the face plate (to avoid interference with handles.)

FG-II-1110 GALLING PREVENTION

Threaded surfaces in the region of clamping device movement shall be lubricated with a chemically compatible lubricant to prevent galling, as specified in the design specification, or the clamping device nuts shall be of a dissimilar metal that is environmentally and structurally compatible with the threaded surface.

FG-II-1200 SEALING

Type II adsorber cells employing gaskets for sealing to the frame shall be by a method that will produce a gasket compression-deflection of at least 65% +15% without exceeding a stress in the clamping device of 67% of its yield strength.

FG-II-1300 ADSORBER SUPPORT

A structure is required behind the Type II adsorber frame openings to support the weight of the cells. The structure minimum length is 30 in., and it shall be built without backstops.

FG-II-1400 PENETRATION

Any penetration in the mounting frame shall be seal welded and isolatable.

Copyright ASME International
Provided by IHS under license with ASME
No reproduction or networking permitted without license from IHS
Not for Resale

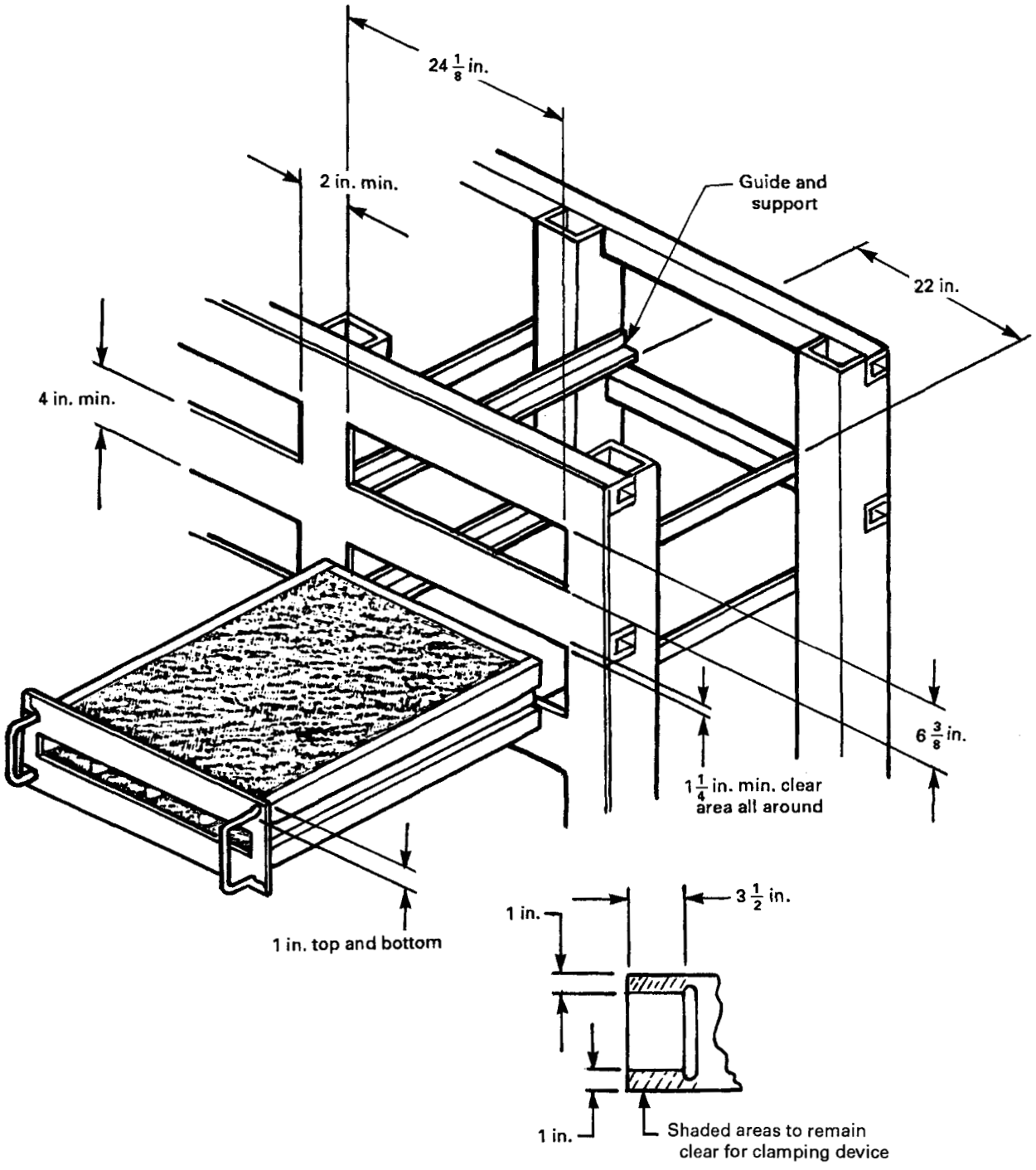

FIG. FG-II-1000 TYPICAL TYPE II ADSORBER CELL MOUNTING FRAME

Copyright ASME International
Provided by IHS under license with ASME
No reproduction or networking permitted without license from IHS
Not for Resale

NONMANDATORY APPENDIX FG-A
DIVISION OF RESPONSIBILITY

This Nonmandatory Appendix is intended to identify the roles normally assumed by the organizations responsible for fulfilling Code requirements when not specifically addressed in an article or subarticle. These are guidelines to assist with Code compliance and are not to be construed as legal or contractual responsibilities unless so invoked by the Owner or designee.

TABLE FG-A-1000
DIVISION OF RESPONSIBILITY

FG-	Item	Responsible Party
3000	Materials	Engineer/Manufacturer
4100	General design	Engineer/Manufacturer
4200	Structural requirements	Manufacturer
4210	General requirements	Engineer
4220	Load definition	Engineer
4230	Load combinations	Engineer
4240	Acceptance criteria	Engineer
4300	Structural design analysis	Manufacturer
4310	Frame deflection (HEPA Filters)	Engineer/Manufacturer
4320	Frame deflection (Type II cell)	Engineer/Manufacturer
4330	Shock loading	Engineer/Manufacturer
5000	Inspection and testing	Manufacturer/Owner
5100	Dimensional inspection	Manufacturer
5200	Alignment and surface finish	Manufacturer
5210	Alignment	Manufacturer
5220	Flatness	Manufacturer
5230	Dimensions	Manufacturer
5240	Surface finish	Manufacturer

Copyright ASME International
Provided by IHS under license with ASME
No reproduction or networking permitted without license from IHS
Not for Resale

TABLE FG-A-1000
DIVISION OF RESPONSIBILITY (CONT'D)

FG-	Item	Responsible Party
5300	Weld inspection	Manufacturer
5400	Coating inspection	Manufacturer
6000	Fabrication	Manufacturer
6100	General	Manufacturer
6200	Welding	Manufacturer
6300	Clamping devices	Manufacturer
6400	Cleaning	Manufacturer
6500	Coating	Manufacturer
7000	Packaging and shipping	Manufacturer/Owner
8000	Quality assurance	Manufacturer/Owner
9000	Nameplates	Manufacturer/Owner

Copyright ASME International
Provided by IHS under license with ASME
No reproduction or networking permitted without license from IHS
Not for Resale

SECTION FH
OTHER ADSORBERS

(In the Course of Preparation)

SECTION FI
METAL MEDIA FILTERS

(In the Course of Preparation)

SECTION FJ
LOW EFFICIENCY FILTERS

(In the Course of Preparation)

SECTION FK
SPECIAL ROUND AND DUCT-CONNECTED HEPA FILTERS

(In the Course of Preparation)

Copyright ASME International
Provided by IHS under license with ASME
No reproduction or networking permitted without license from IHS
Not for Resale

SECTION IA
INSTRUMENTATION AND CONTROLS

IA-1000	**Introduction**	465
IA-1100	Scope	465
IA-2000	**Referenced Documents**	466
IA-3000	**Materials**	467
IA-3100	Materials of Construction	467
IA-3200	Nonpermissible Materials	467
IA-3300	Restricted Materials	467
IA-3400	Certification of Material	467
IA-4000	**Design Requirements**	470
IA-4100	General Design	470
IA-4200	Single Failure Criteria	471
IA-4300	Separation Criteria	471
IA-4400	Qualification of Equipment	471
IA-4500	Panels	472
IA-4600	Mounted Instruments and Sensors	474
IA-4700	Interconnecting Wiring for Skid-Mounted Components	474
IA-4800	Instrument-Sensing Lines and Field-Installed Tubing	474
IA-4900	Instrument Setpoints	475
IA-5000	**Inspection and Testing**	476
IA-5100	General	476
IA-5200	Visual Inspection	476
IA-5300	Calibration and Testing	476
IA-6000	**Panel Fabrication and Assembly**	478
IA-6100	General Requirements	478
IA-6200	Fabrication Process	478
IA-6300	Welding	478
IA-6400	Brazing	478
IA-6500	Cleaning and Coating	478
IA-6600	Installation Requirements: Handling and Rigging	479
IA-6700	Material Identification	479

Copyright ASME International
Provided by IHS under license with ASME
No reproduction or networking permitted without license from IHS
Not for Resale

IA-7000	**Packaging, Shipping, Receiving, Storage, and Handling**	480
IA-7100	General Requirements	480
IA-7200	Packaging	480
IA-7300	Shipping	480
IA-7400	Receiving	480
IA-7500	Storage	480
IA-8000	**Quality Assurance Requirements**	481
IA-8100	General	481
IA-8200	Test Reports and Data	481
IA-9000	**Nameplates**	482
IA-9100	General	482
IA-9200	Requirements	482
IA-9300	Nameplate Specifications	482

Table

IA-3100	Allowable Materials	468

Nonmandatory Appendices

IA-A	Division of Responsibility	483
IA-B	Sample Checklist for Visual Examination of Control Panels/Enclosures, Instruments, and Control Devices	485
IA-C	Instrumentation for Nuclear Air and Gas Treatment Systems	486

Copyright ASME International
Provided by IHS under license with ASME
No reproduction or networking permitted without license from IHS
Not for Resale

ARTICLE IA-1000
INTRODUCTION

IA-1100 SCOPE

This section establishes requirements for the design, manufacture, installation, testing, and documentation for instrumentation, control components, and control panels used in conjunction with nuclear safety-related air and gas treatment systems.

IA-1110 PURPOSE

The purpose of this section is to ensure that the instrumentation and control equipment included herein are adequate for use in safety-related systems.

IA-1120 APPLICABILITY

This section applies only to permanently installed instrumentation and control systems associated with safety-related nuclear air and gas treatment systems.

This section does not cover the requirements for portable instrumentation or controls used for in-place testing or inspection of nuclear air and gas treatment systems. This section does not cover the requirements of temporary instrumentation and controls used for testing or inspection of nuclear air and gas treatment systems during fabrication or installation.

The responsibility for meeting the requirements of this section shall be assigned by the Owner or his designee using Nonmandatory Appendix IA-A as a guide.

IA-1130 DEFINITIONS AND TERMS

accuracy: the ratio of the error to the full-scale output, or the ratio of the error to the output expressed as a percent.

ambient temperature: the temperature surrounding the device. For example, in the case of a remote bulb controller, the ambient temperature is the air temperature surrounding the controller and not the temperature at the bulb (sensing element).

calibration: the comparison of a measurement standard or instrument of known accuracy with another standard or instrument to adjust the output of the instrument (for a particular value of the input) within a specified tolerance.

channel: an arrangement of components and modules as required to generate a single signal. A channel loses its identity where single signals are combined.

component: an item from which the system or device is assembled (for example, transmitters, gauges, switches, resistors, wires, transistors, tubing, etc.).

control panel: an enclosure for mounting of instrumentation, controls and associated wiring and tubing.

controlled device: a device which reacts to the signal received from a controller and changes the required parameter of the controlled medium. Examples are valves, dampers and motors.

local: in the vicinity of equipment being controlled.

margin (instrument setpoint): the difference between a normal operating condition and a trip setpoint.

Megger test: test performed with an instrument (Megger tester) to measure the insulation resistance of wires, power cables, motors, generators, transformers, switchboards, and electrical controls. Application of Megger testing can be either low voltage, high resistance, or high voltage.

raceway: open or closed cable tray or conduit used to support cable or wire installation on nuclear air or gas treatment components.

sensing element: the element directly responsive to the value of the measured variable.

Copyright ASME International
Provided by IHS under license with ASME
No reproduction or networking permitted without license from IHS
Not for Resale

ARTICLE IA-2000
REFERENCED DOCUMENTS

The codes, standards, and specifications referenced below shall supplement those documents listed in Article AA-2000. The latest edition shall be used if no publication date is specified.

ASTM D 635-88, Test Method For Rate of Burning and/or Extent and Time of Burning of Self-Supporting Plastics in a Horizontal Position

Publisher: American Society for Testing and Materials (ASTM), 100 Barr Harbor Drive, West Conshohocken, PA 19428-2959

ANSI/IEEE 336-1985, IEEE Standard Installation, Inspection, and Testing Requirements for Power, Instrumentation, and Control Equipment at Nuclear Facilities[1]

ANSI/IEEE 379-1988, IEEE Standard Application of the Single Failure Criterion to Nuclear Power Generating Station Safety Systems[1]

ANSI/IEEE 383-1974, IEEE Standard for Type Test of Class 1E Electric Cables, Field Splices, and Connections for Nuclear Power Generating Stations[1]

ANSI/IEEE 1050-1989, IEEE Guide For Instrumentation and Control Equipment Grounding in Generating Stations[1]

ANSI/IEEE C37.20-1969, Switchgear Assemblies Including Metal-Enclosed Bus[1]

IEEE 100-1988, Standard Dictionary of Electrical & Electronics Terms

IEEE 384-1981, Standard Criteria for Independence of Class 1E Equipment and Circuits

Publisher: Institute of Electrical and Electronics Engineers (IEEE), 445 Hoes Lane, Piscataway, NJ 08854-1331

ANSI/ISA S67.02-1980, Nuclear Safety-Related Instrument Sensing Line Piping and Tubing Standards for Use in Nuclear Power Plants[1]

ANSI/ISA S67.04-1988, Setpoints for Nuclear Safety-Related Instrumentation[1]

ISA RP7.1-1956, Recommended Practice in Pneumatic Control Circuit Pressure Test

ISA RP60.3-1985, Recommended Practices for Human Engineering for Control Centers

ISA RP60.6-1984, Nameplates, Labels and Tags for Control Centers

Publisher: Instrument Society of America (ISA), 67 Alexander Drive, P.O. Box 12277, Research Triangle Park, NC 27709

NEMA ICS.6-1988, Enclosures for Industrial Control and Systems

Publisher: National Electrical Manufacturers Association (NEMA), 1300 North 17th Street, Rosslyn, VA 22209

NFPA 70-1990, National Electrical Code

Publisher: National Fire Protection Association (NFPA), 1 Batterymarch Park, Quincy, MA 02269-9101

10CFR50, Code of Federal Regulations

Publisher: U.S. Government Printing Office, Washington, DC 20402-9325

[1] May also be obtained from American National Standards Institute, 25 West 43rd Street, New York, NY 10036.

Copyright ASME International
Provided by IHS under license with ASME
No reproduction or networking permitted without license from IHS
Not for Resale

ARTICLE IA-3000
MATERIALS

IA-3100 MATERIALS OF CONSTRUCTION

All materials used shall have properties and composition suitable for the application as defined by the design specification and the operating environmental conditions as defined in IA-4120. Materials shall be in conformance with the latest revision of the ASME and ASTM materials listed in Table IA-3100. Substitute materials shall be equivalent to or exceed the requirements in Table IA-3100.

Materials that are part of the pressure boundary or support equipment shall meet the structural requirements of Article AA-4000.

IA-3200 NONPERMISSIBLE MATERIALS

Use of the following materials is prohibited in the manufacture and installation of instrumentation and controls in nuclear air and gas treatment systems:

(a) mercury

(b) radiologically unstable fluorinated polymers

(c) asbestos

IA-3300 RESTRICTED MATERIALS

All material shall be compatible with the operating environment. The following material shall not be used unless approved by the Owner or his designee:

(a) aluminum and zinc in the presence of corrosive vapors

(b) adjoining materials that may cause galvanic corrosion

(c) chlorine-producing materials, e.g., polyvinylchloride (PVC)

IA-3400 CERTIFICATION OF MATERIAL

The Manufacturer shall make available a Certificate of Conformance for panel structural material and tubing to the ASTM numbers listed in Table IA-3100. For those materials which do not have ASTM ratings, testing should be performed per ASTM A370.

All other components used in the construction of the panel assembly shall be provided with a Manufacturer's Certificate of Compliance to the requirements in the design specification.

Copyright ASME International
Provided by IHS under license with ASME
No reproduction or networking permitted without license from IHS
Not for Resale

TABLE IA-3100
ALLOWABLE MATERIALS

ASME Designator	ASTM Designator	Publication Title
Plate, Sheet, Strip		
...	A 167	Stainless and Heat-Resisting Chromium-Nickel Steel Plate, Sheet, and Strip
SA-240	A 240	Heat-Resisting Chromium and Chromium-Nickel Stainless Steel Plate, Sheet, and Strip for Pressure Vessels
...	A 366	Steel, Carbon, Cold-Rolled Sheet, Commercial Quality
SA-414	A 414	Carbon Steel Sheet for Pressure Vessels
	A 525	Steel Sheet, Zinc-Coated (Galvanized) by the Hot-Dip Process, General Requirements
...	A 568	General Requirements for Steel, Carbon, and High-Strength Low-Alloy Hot-Rolled Sheet and Cold-Rolled Sheet
...	A 570	Hot-Rolled Carbon Steel Sheet and Strip, Structural Quality
...	A 666	Austenitic Stainless Steel Sheet, Strip, Plate, and Flat Bar
SB-209	B 209	Aluminum and Aluminum-Alloy Sheet and Plate
Structural and Bar		
SA-36	A 36	Structural Steel
...	A 276	Stainless and Heat-Resisting Steel Bars and Shapes
...	B 187	Copper Bus Bar, Rod, and Shapes
Hardware		
SA-182	A 182	Forged or Rolled Alloy-Steel Pipe Flanges, Forged Fittings, Valves, and Parts for High-Temperature
SA-193	A 193	Alloy Steel and Stainless Steel Bolting Material for High-Temperature Service
SA-194	A 194	Carbon and Alloy-Steel Nuts for Bolts for High-Pressure and High-Temperature Service
SA-325	A 325	High-Strength Bolts for Structural Steel Joints
SA-403	A 403	Wrought Austenitic Stainless Steel Piping Fittings
SA-449	A 449	Quenched and Tempered Steel Bolts and Studs
Pipe and Tube		
SA-312	A 312	Seamless and Welded Austenitic Stainless Steel Pipe
...	A 450	General Requirements for Carbon, Ferritic Alloy, and Austenitic Alloy Steel Tubes
...	A 511	Seamless Stainless Steel Mechanical Tubing
...	A 554	Welded Stainless Steel Mechanical Tubing
...	A 632	Seamless and Welded Austenitic Stainless Steel Tubing (Small Diameter) for General Service
...	B 68	Seamless Copper Tube, Bright Annealed
SB-75	B 75	Seamless Copper Tube
...	B 88	Seamless Copper Water Tube
...	B 210	Aluminum and Aluminum-Alloy Drawn Seamless Tubes

Copyright ASME International
Provided by IHS under license with ASME
No reproduction or networking permitted without license from IHS
Not for Resale

TABLE IA-3100
ALLOWABLE MATERIALS (CONT'D)

ASME Designator	ASTM Designator	Publication Title
Conduit-Plastic		
...	D 3485	Smooth Wall Coilable Polyethelene (PE) Conduit for Pre-Assembled Wire and Cable
Wire and Wire Insulation		
...	B 3	Soft or Annealed Copper Wire
...	B 8	Concentric Lay Stranded Copper Conductors, Hard, Medium-Hard, or Soft
...	B 33	Tinned Soft or Annealed Copper for Electrical Purposes
...	B 105	Hard-Drawn Copper Alloy Wires for Electrical Conductors
...	B 206	Copper-Nickel-Zinc Alloy (Nickel Silver) Wire and Copper-Nickel Alloy wire
...	B 250	General Requirements for Wrought Copper Alloy Wire
...	D 2802	Ozone-Resistant Ethylene-Propylene Insulation for Wire and Cable
...	D 4246	Ozone-Resistant Thermoplastic Elastomer Insulation for Wire and Cable, 90°C Operation

Copyright ASME International
Provided by IHS under license with ASME
No reproduction or networking permitted without license from IHS
Not for Resale

ARTICLE IA-4000
DESIGN REQUIREMENTS

IA-4100 GENERAL DESIGN

IA-4110 PURPOSE

This section establishes design requirements for instrument and control systems and the selection of instrumentation and control components used in nuclear facilities air and gas treatment systems.

IA-4120 DESIGN SPECIFICATION

The design specification shall establish the purpose (design function) of the instrumentation and control components. The design specification shall also identify the instrumentation and control component safety classifications. For guidance in determining instrumentation and controls for nuclear air and gas treatment systems refer to Nonmandatory Appendix IA-C. The design specification shall provide requirements for the design, fabrication, and selection of instrumentation and control systems in accordance with this Code and shall include, as applicable:

(a) Performance requirements for all plant operating modes (accident and normal) wherein the equipment is expected to perform an intended function.

(b) Ambient and process operating conditions including the measured variable for each of the applicable operating modes described in IA-4120(a).

(1) temperature: the minimum and maximum temperatures to which the instrumentation and control system devices will be subjected.

(2) pressure: the minimum and maximum pressures to which the instrumentation and control system devices will be subjected.

(3) relative humidity: the minimum and maximum relative humidities to which the equipment will be subjected.

(4) radiation — alpha, beta, and gamma: the cumulative dosage levels and maximum dose rates to which the equipment will be subjected.

(5) chemicals: concentration and duration of chemical exposure to which the equipment will be subjected.

(6) electrical: all electrical power transients to which the instrumentation and control system devices may be subjected. Variations in parameters such as voltage, frequency, and current shall include minimum and maximum values and their duration.

(7) structural: structural loads to which the instrumentation and control system components will be subjected. The loads shall include as a minimum the applicable loads listed in AA-4211.

IA-4130 MANUFACTURER'S DOCUMENTATION REQUIREMENTS

When required by the design specification, documentation provided by the Manufacturer to the Owner or his designee shall include the following, as applicable:

(a) mounting connection details
(b) weight and center of gravity
(c) service connections, size, type, and locations
(d) materials of construction
(e) design life
(f) environmental and seismic qualifications
(g) mounting restrictions and instructions
(h) loop and logic diagrams
(i) electrical schematic and wiring drawings
(j) panel general arrangement and construction drawings
(k) instrument piping and tubing drawings
(l) Certificate of Conformance
(m) calibration procedures and data
(n) panel-mounted instrument list including nameplate engraving
(o) maintenance and surveillance requirements

Copyright ASME International
Provided by IHS under license with ASME
No reproduction or networking permitted without license from IHS
Not for Resale

IA-4140 CLARIFICATION OF CODE APPLICABILITY

Pressure retaining parts whose design, materials, manufacture, test, and documentation are covered by ASME Section III shall be in accordance with the applicable requirements of that Code. When conflict exists between this section and ASME Section III, the latter shall take precedence.

IA-4200 SINGLE FAILURE CRITERIA

Where redundant safety channels are required by the design specification, they shall meet the single failure requirements of ANSI/IEEE 379.

IA-4300 SEPARATION CRITERIA

IA-4310 CIRCUITS AND DEVICES

IA-4311

Physical separation of nuclear safety-related circuits and devices shall be in accordance with IEEE Standard 384.

IA-4312

Instrument cables, including but not limited to computer, transducer, thermocouple, resistance temperature detector, or other low-level signal cables shall be installed in separate raceways from power-carrying cables.

IA-4320 INSTRUMENT-SENSING LINES

IA-4321

Instrument-sensing lines and interconnecting tubing for redundant safety channels shall be routed a minimum of 18 in. (450 mm) apart from each other, in areas free of or protected from missiles, high-energy jet streams, and pipe whips.

IA-4322

Where 18 in. (450 mm) of separation cannot be maintained, each line shall be separated by a barrier extending at least 1 in. (25 mm) beyond the line of sight between redundant sensing lines. The design and installation of separation barrier shall be in accordance with the requirements of Article AA-4000.

IA-4323

Tubing shall not rest against surfaces that can cause wear or mechanical damage.

IA-4324

Sensing lines shall be routed to ensure that the intended function is not jeopardized due to high vibration, abnormal temperature or stresses due to thermal expansion.

IA-4325

Divisional separation of permanently filled capillaries, sensing lines, and interconnecting tubing for nuclear safety-related devices shall be identified by color coding and tagging, as a minimum, at both ends.

IA-4326

Redundant tubing inside panels shall be separated by a minimum of 1 in. (25.4 mm).

IA-4400 QUALIFICATION OF EQUIPMENT

All components shall be operable when exposed to the range of operating conditions specified during normal and accident conditions. Manufacturer installation and maintenance requirements that are needed to maintain qualification of the equipment shall be identified by the Manufacturer and followed in the qualification program.

IA-4410 NORMAL OPERATING CONDITIONS

All components shall be specified, manufactured, and qualified to ensure operation within performance limits (e.g., accuracy) when exposed to their normal operating conditions. Normal operating conditions include but are not limited to exposure to the following:

(a) temperature
(b) pressure
(c) humidity
(d) vibration
(e) chemicals
(f) power levels and fluctuations
(g) radiation

Copyright ASME International
Provided by IHS under license with ASME
No reproduction or networking permitted without license from IHS
Not for Resale

IA-4420 ENVIRONMENTAL QUALIFICATION

Safety-related components operating in a harsh environment (as defined in 10CFR50.49) shall be qualified in accordance with IEEE Standard 323.

IA-4430 SEISMIC QUALIFICATION

Safety-related components and mountings shall be seismically qualified using the guidelines of IEEE Standard 344 to the Owner's required response spectra, plus applicable amplification factors, for the components location and mounting.

Components that do not perform a safety-related function but must retain their structural integrity so as not to damage, degrade or interfere with the performance of safety functions by any safety-related equipment or components shall maintain their structural integrity when subjected to applicable seismic loads.

IA-4440 QUALIFICATION DOCUMENTATION

The Owner shall have documentation demonstrating the qualification of components and showing the Owner's acceptance of the qualification testing and results.

IA-4500 PANELS

IA-4510 GENERAL

IA-4511

Control panels shall be designed to support and protect the nuclear safety-related instrumentation and controls and to facilitate the monitoring and control of the mechanical equipment operation and performance.

IA-4512

Instrumentation and control devices on the front and the inside of control panels shall be arranged in accordance with the requirements of ISA RP60.3.

IA-4513

Temperature limits inside a control panel shall be maintained within the allowable specified design temperature range for all components mounted inside the panel.

IA-4520 STRUCTURES AND ENCLOSURE MATERIALS

IA-4521

Material for enclosures, stiffeners, braces, supports and frames shall be selected to meet the structural design requirements of Article AA-4000.

IA-4522

Support shall be provided for incoming cables, wiring, piping, and other appurtenances.

IA-4523

Subpanels and brackets for mounting instruments shall meet the structural loads and load combinations set forth by the design specification.

IA-4524

Panels weighing over 200 lb (91 kg) shall be provided with removable lifting eyes or other means as required for loading, unloading, and moving the panels to their final installation location.

IA-4525

All tubing, wire troughs, or raceways used in the panel shall be of the metallic type or shall be manufactured from fire retardant or self-extinguishing material. Nonmetallic components and devices shall be manufactured from self-extinguishing materials, as classified by ASTM D 635, Standard Method of Test for Flammability of Self-Supportive Plastics.

IA-4526

Panels shall be provided with an integral mounting plate or a separate structural channel member, as required by the design specification, to facilitate the mounting of panels on imbedment plates or anchor bolts provided in walls or floors.

IA-4530 PANEL WIRING

IA-4531

Wiring bundles shall be supported by such devices as clamps, straps, wire ties, wirewrap, etc. Uninsulated metallic/wire ties shall not be used.

Copyright ASME International
Provided by IHS under license with ASME
No reproduction or networking permitted without license from IHS
Not for Resale

IA-4532

Insulating grommets shall be installed through all openings provided in partitions for the passage of wires or cables.

IA-4533

Where a cable crosses a panel hinge, multi-strand flexible wire shall be used. The cable shall also be secured on each side of the hinge, protected from damage.

IA-4534

Both ends of each wire shall be marked with color coded wire markers as required by the design specification.

IA-4535

All wiring shall have current capacity, mechanical strength, thermal rating, and insulation characteristics to meet the circuit and installation requirements required by the design specification and NFPA 70, para. 384-9. The wire insulation and Class 1E cables shall meet the requirements of ANSI/IEEE 383.

IA-4536

Terminal blocks shall be installed on subpanels for terminating cables entering and leaving the panels, except that wire leads from thermocouples and certain other temperature-detecting devices may be brought directly to the terminal blocks in the instrument cases.

IA-4537

Terminal blocks shall be provided with a marking strip, and terminals shall be clearly identified.

IA-4538

The terminal blocks used for the termination of power voltage circuits, the control voltage circuits, and signal circuits (low voltage or current) shall be physically separate from each other.

IA-4539

The control panel and its appurtenant equipment shall be connected to a ground bus inside the panel for personal safety. The method of grounding shall not compromise the independence of the redundant safety-related instruments and shall be in accordance with IEEE 1050. A method of terminating to the Owner's station ground bus shall be provided.

IA-4540 POWER SUPPLY AND FUSES

IA-4541

Power supplies within control panels shall be provided with branch circuit overload protection and a means to disconnect incoming power.

IA-4542

Fuses shall be installed in locations free from obstructions.

IA-4543

Fuses shall be sized to limit fault currents within the requirements of the cable insulation.

IA-4550 PANEL PIPING, TUBING, VALVES, AND FITTINGS

IA-4551

Process sensing lines, fittings and valves installed within panels shall meet the requirements of Subarticle IA-4600.

IA-4552

All non-process piping, tubing, or valves installed inside panels shall be in accordance with ANSI B31.1 unless otherwise required by the design specification.

IA-4553

Tubing bends shall be smooth and formed to avoid flattened, kinked, or wrinkled bends.

IA-4554

Panel piping or tubing installation shall not interfere with panel-mounted instrument removal or access to the instrument for maintenance purposes.

Copyright ASME International
Provided by IHS under license with ASME
No reproduction or networking permitted without license from IHS
Not for Resale

IA-4555

Isolation valves and test connections shall be installed in an easily accessible location to allow in-place calibration of all instrumentation.

IA-4556

Isolation valves shall not be solely supported by the instrument tubing. Isolation valve supports shall be secured to the panel structure or substructure to prevent torque being applied to the tubing.

IA-4557

Bulkhead fittings shall be used for termination of the control tubing from inside and outside of the panel.

IA-4558

Instrument lines shall have permanent tags on both ends where required to assure proper identification. The type of material, color coding, and method of tagging shall be as required by the design specification.

IA-4560 INSTRUMENT AIR-SUPPLY HEADER ASSEMBLY

IA-4561

Where required, pressure reducing valves, complete with isolation valves, relief valves, and gauges, shall be installed inside the panel to provide a regulated instrument air supply to an instrument air header.

IA-4562

The instrument air header shall be provided with isolation valves for each branch supply line.

IA-4570 INSTRUMENT TAGS

Permanent nameplates shall be installed on control panels to designate instrument function and tag number. Nameplates shall be in accordance with ISA RP60.6 or the Owner's requirements.

IA-4600 MOUNTED INSTRUMENTS AND SENSORS

Instruments shall not be mounted in locations where their performance will be adversely affected by equipment vibration. Instrument chassis and attached capillary tubing shall be supported to meet the seismic requirements for their particular location.

IA-4700 INTERCONNECTING WIRING FOR SKID-MOUNTED COMPONENTS

Interconnecting circuits between components mounted on a skid shall meet the requirements of the National Electric Code, Sections 250-59 and 250-95, and IA-4534 and IA-4535.

IA-4800 INSTRUMENT-SENSING LINES AND FIELD-INSTALLED TUBING

IA-4810 PRESSURE BOUNDARY AND MECHANICAL DESIGN REQUIREMENTS

IA-4811

Instrument piping, tubing, isolation valves, and permanently filled capillaries in systems designed to ASME Section III shall be designed and constructed to the requirements of ISA S67.02, as supplemented below:

(a) Instrument-sensing lines that are connected to Class 2 process piping or vessels shall not be less than Class 2 Seismic Category I from their connections to the process piping or vessel to and including the accessible isolation valve.

(b) Instrument-sensing lines that are connected to Class 2 processing piping or vessels and that are used to actuate or monitor safety-related systems shall not be less than Class 2 Seismic Category I from their connections to the process piping or vessel to the sensing instrumentation.

(c) Instrument-sensing lines that are connected to Class 3 process piping and vessels and that are used to actuate or monitor safety-related systems shall not be less than Class 3 Seismic Category I from their connection to the process piping or vessel to the sensing instrumentation.

IA-4812

Instrument-sensing lines not connected to ASME Section III Class 2 or 3 piping, vessels, or ductwork shall meet the requirements of ANSI B31.1.

Copyright ASME International
Provided by IHS under license with ASME
No reproduction or networking permitted without license from IHS
Not for Resale

IA-4813

Fitting material shall be compatible with the tube or pipe material to avoid galvanic corrosion and provide acceptable soldering or brazing joints.

IA-4820 TUBE PITCH AND CONDENSATE TRAP

Where the potential for condensation or oil migration exists, condensate or oil traps with valved drain legs shall be provided at the low points of the tubing.

IA-4830 SUPPORT SYSTEM

IA-4831

Sensing lines and tubing shall be installed in a continuous support system such as metal trays wherever practical. Sensing lines and tubing shall be run along walls, columns and ceilings to avoid damage by pipe whip, missiles, jet forces, or falling objects.

IA-4832

The support system for instrument sensing or interconnecting lines shall be taken into account in the tray or duct hanger loading requirements.

IA-4833

Supports for nuclear safety-related sensing lines shall be designed using the requirements of Article AA-4000.

IA-4834

Loads such as thermal expansion and weight of insulation shall be evaluated in accordance with AA-4212 for instrument tubing.

IA-4840 ROOT VALVES AND ISOLATION VALVES

IA-4841

Root valves shall be located in the vicinity of the point of connection to the process pipe or duct.

IA-4842

Isolation valves and test connections shall be installed in a location to allow in-place calibration of instrumentation.

IA-4900 INSTRUMENT SETPOINTS

IA-4910

The Owner shall establish setpoints for nuclear safety-related air and gas treatment systems with allowance for loop inaccuracy and have provision for margin to ensure that systems perform within their design limits.

IA-4920

Safety-related setpoints and loop error determinations shall be determined using the methodology of ISA S67.04.

Copyright ASME International
Provided by IHS under license with ASME
No reproduction or networking permitted without license from IHS
Not for Resale

ARTICLE IA-5000
INSPECTION AND TESTING

IA-5100 GENERAL

Inspection and testing of instrumentation and control components shall be in accordance with IEEE 336. In addition, the requirements of Article AA-5000 supplemented by the following shall apply.

IA-5110 PROCEDURES FOR INSPECTION AND TESTING

IA-5111

Written procedures with acceptance criteria for visual examination, inspection and functional testing shall be developed in accordance with AA-5120 and Article TA-3000 for instrumentation and control components.

IA-5112

The procedures shall be reviewed and approved by the Owner or designee.

IA-5120 TEST REPORTS

After inspection and testing is completed a written test report shall be prepared by personnel performing the test in accordance with AA-5250.

IA-5200 VISUAL INSPECTION

Visual inspection shall be performed in accordance with a written checklist per AA-5240. For example of a checklist see Nonmandatory Appendix IA-B.

IA-5220 METHODS OF VISUAL EXAMINATION

Visual examination shall be performed by either method of direct visual or remote visual examination in accordance with AA-5220.

IA-5230 WRITTEN PROCEDURES

Visual examination shall be performed in accordance with approved written procedures.

IA-5300 CALIBRATION AND TESTING

Manufacturer's calibration and test instrumentation shall be in accordance with Article TA-3000 and traceable to NIST.

IA-5310 PANEL-MOUNTED INSTRUMENTS

IA-5311

All instruments and devices shall be calibrated and tested in accordance with the procedures developed for IA-5111.

IA-5312

Wiring for control power shall be subjected to a Megger test at the panel assembly facility. Megger or other high-voltage test shall not be applied to instrumentation or shielded cables.

IA-5313

An electrical continuity test shall be performed to demonstrate the correctness of the wiring termination of all panel-mounted instruments. Functional tests shall

Copyright ASME International
Provided by IHS under license with ASME
No reproduction or networking permitted without license from IHS
Not for Resale

be performed in accordance with written test procedures approved by the Owner or designee.

IA-5320 LOCAL MOUNTED INSTRUMENTS

IA-5321

All local mounted instruments and devices shall be calibrated and tested in accordance with the Manufacturer's calibration and test procedures and the procedures developed for IA-5111.

IA-5330 PRESSURE TESTING OF TUBING AND SENSING LINES

IA-5331

Pressure testing of pneumatic control circuits shall be performed in accordance with ISA RP7.1.

IA-5332

Pressure testing of sensing lines shall be performed in accordance with ANSI/ASME B31.1 or ASME Section III as applicable.

Copyright ASME International
Provided by IHS under license with ASME
No reproduction or networking permitted without license from IHS
Not for Resale

ARTICLE IA-6000
PANEL FABRICATION AND ASSEMBLY

IA-6100 GENERAL REQUIREMENTS

In addition to the requirements of Article AA-6000, the following requirements shall apply.

IA-6110 MATERIALS

IA-6111 Material Selection

IA-6111.1 Materials to be used in the fabrication of control panels, instruments, devices, components, parts, sensing lines, support systems, anchors, and bolts shall conform to the requirements of Article IA-3000.

IA-6111.2 Thickness of plate material for the enclosure skin, stiffeners, braces, and frame shall be selected to meet the structural loadings and applicable seismic requirements of Article IA-4000 and the design specification.

IA-6112

Repair of materials and surfaces with defects shall be performed in accordance with AA-6123.

IA-6200 FABRICATION PROCESS

IA-6210

Cutting, forming, and bending shall be in accordance with AA-6210.

IA-6211

Thermal cutting shall be in accordance with AA-6212.

IA-6212 Panel Fabrication by Welding

IA-6212.1 When the control panel enclosure is fabricated by welding more than one piece of sheet steel, the welding joints shall be made in accordance with the requirements of AA-6300. Warping or distortion from cutting, punching or welding operations shall not extend beyond the outer edge of the panel-mounted device.

IA-6212.2 The control panel shall be all welded sheet steel or plate construction. Reinforcing shall be provided so that the deflection due to the added weight of the instruments will not exceed 0.125 in. (3.2 mm) for any 4 ft (1219 mm) of panel surface.

IA-6220 FITTINGS AND ALIGNING

Fitting and aligning shall be in accordance with AA-6230.

IA-6230 MECHANICAL JOINTS

Mechanical joints shall be in accordance with AA-6250.

IA-6300 WELDING

Welding shall be in accordance with AA-6300.

IA-6400 BRAZING

Brazing shall be in accordance with AA-6400.

IA-6500 CLEANING AND COATING

Cleaning and coating shall be in accordance with AA-6500.

Copyright ASME International
Provided by IHS under license with ASME
No reproduction or networking permitted without license from IHS
Not for Resale

IA-6600 INSTALLATION REQUIREMENTS: HANDLING AND RIGGING

Handling and rigging shall be in accordance with AA-6610.

IA-6700 MATERIAL IDENTIFICATION

Materials of construction of the control panel shall be as specified by the Owner or designee. A Certificate of Conformance shall be supplied as required by the design specification and IA-3400.

Copyright ASME International
Provided by IHS under license with ASME
No reproduction or networking permitted without license from IHS
Not for Resale

ARTICLE IA-7000
PACKAGING, SHIPPING, RECEIVING, STORAGE, AND HANDLING

IA-7100 GENERAL REQUIREMENTS

Packaging, shipping, receiving, storage, and handling of all control panels, instrumentation, and accessories shall be in accordance with Article AA-7000 and ASME NQA-2, Part 2.2.

Any control panel made of items requiring different levels of handling shall be classified to the highest level designated for any of the respective items.

IA-7200 PACKAGING

All control panels and sensitive instrumentation (if packaged separately) shall meet the requirements of packaging level B in accordance with ASME NQA-2, Part 2.2, paras. 2.2.2 and 3.2.2.

When bulk accessories are packaged separately (i.e., valves, sensing lines, instrument cables), the packaging shall meet the requirements of packaging level C in accordance with ASME NQA-2, Part 2.2, paras. 2.2.3 and 3.2.3.

Identification and marking on the outside of all packages shall be maintained and weather-proofed.

IA-7300 SHIPPING

The mode of transportation used shall be consistent with the protection classification of the item and with the packaging method employed.

IA-7400 RECEIVING

IA-7410 INSPECTION

Preliminary visual inspection shall be performed prior to or immediately after unloading to determine if any damage occurred during shipping. Unless the packaging marking prohibits unpacking, the contents of all shipments shall be visually inspected to verify that the specified packaging and shipping requirements have been maintained. The inspection shall be performed in an area equivalent to the level of storage requirement for the item (see IA-7500).

IA-7420 DISPOSITION

Packages shall be controlled in accordance with ASME NQA-1.

IA-7500 STORAGE

Control panels and sensitive instruments shall be stored indoors. This area shall have a paved floor or equal and shall not be subject to flooding. The area shall be well ventilated and shall be provided with uniform temperature control to prevent condensation and corrosion. Original packaging is recommended if item is to be stored for a long period of time.

Miscellaneous accessories such as valves, sensing lines, and instrument cables shall be stored as described above, except that temperature control is not required.

All items shall be plainly marked so that they are easily identified, and shall be stored in a manner as to permit ready access for inspection, maintenance, or retrieval without excessive handling to minimize risk of damage.

Copyright ASME International
Provided by IHS under license with ASME
No reproduction or networking permitted without license from IHS
Not for Resale

ARTICLE IA-8000
QUALITY ASSURANCE REQUIREMENTS

IA-8100 GENERAL

Quality assurance for instrumentation and controls shall be in accordance with the requirements of Article AA-8000 and the requirements below.

IA-8200 TEST REPORTS AND DATA

IA-8210

The following test reports and data supporting the design and installation of instrumentation and control devices used in nuclear facility air and gas treatment systems shall be maintained in records.

IA-8211

All records and procedures that are required to be maintained by ANSI B31.1 for the portion of installation designed to ANSI B31.1 and ASME Section III for the portions of installation designed to ANSI B31.1 and ASME Section III.

IA-8212

Documentation as identified in IA-4130 and IA-4440.

Copyright ASME International
Provided by IHS under license with ASME
No reproduction or networking permitted without license from IHS
Not for Resale

ARTICLE IA-9000
NAMEPLATES

IA-9100 GENERAL

Permanent types of nameplates shall be designed, manufactured and installed in accordance with the requirements of Article AA-9000 and the requirements below.

IA-9200 REQUIREMENTS

Each instrument and control device shall be provided with a permanent type of Manufacturer's nameplate.

IA-9300 NAMEPLATE SPECIFICATIONS

IA-9310 MATERIAL

Nameplates supplied and installed by the manufacturer shall be made from noncorrosive material.

IA-9320 SIZE

Nameplates shall be sized to accommodate all pertinent information.

IA-9330 INFORMATION

The following information shall be stamped or engraved on each nameplate in lieu of requirements of AA-9120:

(a) Manufacturer
(b) model or catalog number
(c) serial number
(d) range

Copyright ASME International
Provided by IHS under license with ASME
No reproduction or networking permitted without license from IHS
Not for Resale

NONMANDATORY APPENDIX IA-A
DIVISION OF RESPONSIBILITY

This Nonmandatory Appendix is intended to clarify the responsibility for ensuring that instrumentation and controls meet their intended performance requirements.

TABLE IA-A-1000
DIVISION OF RESPONSIBILITY

IA-	Item	Responsible Party
3100	Materials of construction	Owner
3200	Nonpermissible materials	Owner
3300	Restricted material	Owner
3400	Certification of materials	Manufacturer
4120	Design specifications	Engineer
4130	Manufacturer's documentation	Manufacturer
4300	Separation criteria	Owner/Manufacturer
4400	Qualification of equipment	Owner/Engineer/Manufacturer
4440	Qualification documentation	Owner
4500	Control panel design	Engineer/Manufacturer
4700	Interconnecting wiring for skid-mounted equipment	Manufacturer
4800	Instrument-sensing lines and field-installed tubing	Owner
4900	Setpoints	Owner
5110	Procedures for inspection and testing	Owner/Manufacturer
5120	Test reports	Manufacturer
5200	Visual inspection	Owner/Manufacturer
5300	Calibration and testing	Owner/Manufacturer
6100	Materials	Engineer/Manufacturer

Copyright ASME International
Provided by IHS under license with ASME
No reproduction or networking permitted without license from IHS
Not for Resale

TABLE IA-A-1000
DIVISION OF RESPONSIBILITY (CONT'D)

IA-	Item	Responsible Party
6200	Fabrication process	Manufacturer
6300	Welding	Manufacturer
6400	Brazing	Manufacturer
6500	Cleaning and coating	Manufacturer
6600	Installation requirements	Manufacturer
6700	Material identification	Owner/Manufacturer
7000	Packaging, shipping, receiving, storage, and handling	Owner/Manufacturer
8200	Test reports and data	Owner/Manufacturer
9000	Nameplates	Engineer/Manufacturer

Copyright ASME International
Provided by IHS under license with ASME
No reproduction or networking permitted without license from IHS
Not for Resale

NONMANDATORY APPENDIX IA-B

SAMPLE CHECKLIST FOR VISUAL EXAMINATION OF CONTROL PANELS/ENCLOSURES, INSTRUMENTS, AND CONTROL DEVICES

TABLE IA-B-1000
SAMPLE CHECKLIST FOR VISUAL EXAMINATION OF CONTROL PANELS/ENCLOSURES, INSTRUMENTS, AND CONTROL DEVICES

Item No.	Inspection Description	Result
1.	Is there any evidence of visible damage and of poor workmanship, handling, or storage?	Yes _____ No _____
2.	Is there any evidence of warping or distortion during cutting and punching operations?	Yes _____ No _____
3.	Is the paint finish free from runs, sags, pits, blisters, skips, and over-spray?	Yes _____ No _____
4.	Have the instruments and devices been arranged and labeled in accordance with the latest issue of approved panel general arrangement drawings?	Yes _____ No _____
5.	Are the electrical and pneumatic hardware, tubing fittings, valves, tags, wire terminal blocks, lugs, ground raceway, and nameplates, etc., of the acceptable type and manufacturer, as specified in the design specification or listed on the approved bills of material?	Yes _____ No _____
6.	Have the wire terminations been properly identified and securely fastened to their terminal connections in accordance with the latest issue of approved point-to-point wiring diagrams?	Yes _____ No _____
7.	Have the terminal blocks been clearly marked with the identification shown on the point-to-point wiring diagrams?	Yes _____ No _____
8.	Are there sufficient number of spare terminal blocks provided as required by the design specification?	Yes _____ No _____
9.	Will the tubing installed interfere with the removal of instruments and devices when required or hinder the testing or calibration operations?	Yes _____ No _____
10.	Are the tubing bends flat and free from kinks and wrinkles?	Yes _____ No _____
11.	Have the shutoff valves mounted in the pneumatic lines been adequately supported from panel structural members to not cause undue torque to the tubing when opened or closed?	Yes _____ No _____
12.	Has each piping or tubing termination been properly made and identified in accordance with the latest issue of approved point-to-point piping diagrams?	Yes _____ No _____
13.	Have the shutoff service valves and plug-in test tees been provided where specified for testing purposes?	Yes _____ No _____
14.	Have there been sufficient number of spare instrument air valve outlets provided, as required by the design specification?	Yes _____ No _____
15.	Is there any evidence of mating sufaces being misaligned?	Yes _____ No _____
16.	Have welding joints been inspected and tested in accordance with AA-6300?	Yes _____ No _____

Copyright ASME International
Provided by IHS under license with ASME
No reproduction or networking permitted without license from IHS
Not for Resale

NONMANDATORY APPENDIX IA-C
INSTRUMENTATION FOR NUCLEAR AIR AND GAS TREATMENT SYSTEMS

ARTICLE IA-C-1000

IA-C-1100 PURPOSE

The purpose of this Nonmandatory Appendix is to give guidance in determining the necessary instrumentation for major components of nuclear air and gas treatment systems. The different system designs, component arrangements, and owner regulatory commitments require that the design of the instrumentation and controls be determined on an individual basis.

IA-C-1200 FUNCTIONAL DESIGN

IA-C-1210 GENERAL

The designer should provide the appropriate monitoring instruments, alarms, and controls on or adjacent to each applicable component, or at a remote manned control panel to provide optimum operator interface.

IA-C-1220 RECOMMENDED SYSTEM PARAMETERS

The following are recommended system parameters that should be considered for components in typical nuclear air and gas treatment systems.

Copyright ASME International
Provided by IHS under license with ASME
No reproduction or networking permitted without license from IHS
Not for Resale

TABLE IA-C-1000
INSTRUMENTATION FOR NUCLEAR AIR AND GAS TREATMENT SYSTEMS

Filter Train	Humidity	Temperature	Press	Different Press	Level
Filter train	...	...	...	I, AH	...
Prefilter	...	...	...	I	...
Carbon absorber [Note (1)]	...	AH	...	...	...
HEPA filter	...	...	...	I	...
Demister	I	...	...	...	...
Heating coil	...	I, C	...	...	...
Cooling coil	...	I, C	...	...	...
Heater	...	I, C	...	...	...
Heat exchanger	...	I, C	...	...	...
Pump [Note (2)]	...	...	I	...	...
Reaction chamber	...	I, C, AH	...	...	...
Recombiner	...	I, C, AH	...	...	...
Evaporative coolers	...	I, C	...	...	...
Air handling unit					
Fan [Note (3)]	...	...	...	...	...
Prefilter	...	...	...	I	...
Heating coil [Notes (4) and (5)]	...	I, C	...	...	...
Cooling coil [Notes (4) and (5)]	...	I, C	...	...	...
Blower/fan [Note (3)]	...	...	...	...	
Chemical addition tank	...	...	...	...	I
Compressor [Note (3)]	...	...	...	...	...
Condenser (steam)	...	...	I	...	I, C, AH, AL
Refrigeration equipment [Note (6)]	...	...	...	...	...
Damper/louver/valve [Note (7)]	...	...	...	...	...

NOTES:
(1) 2 stage alarms for high and high-high.
(2) Suction and discharge pressure should be indicated.
(3) Equipment operating status should be provided in the control room.
(4) Coil discharge air temperature indicated and controlled.
(5) Units introducing outside air should be provided with freeze protection.
(6) See Appendix RA-II.
(7) Operating status and control should be provided based on system design requirements.

GENERAL NOTE: The following abbreviations are used in this table: AH = Alarm High; AL = Alarm Low; C = Control; I = Indication; R = Record.

Copyright ASME International
Provided by IHS under license with ASME
No reproduction or networking permitted without license from IHS
Not for Resale

Copyright ASME International
Provided by IHS under license with ASME
No reproduction or networking permitted without license from IHS
Not for Resale

Division III
Process Gas Treatment

(In the Course of Preparation)

Copyright ASME International
Provided by IHS under license with ASME
No reproduction or networking permitted without license from IHS
Not for Resale

SECTION GA
PRESSURE VESSELS, PIPING, HEAT EXCHANGERS, AND VALVES

(In the Course of Preparation)

SECTION GB
NOBLE GAS HOLD-UP EQUIPMENT

(In the Course of Preparation)

SECTION GC
COMPRESSORS

(In the Course of Preparation)

SECTION GD
OTHER RADIONUCLIDE EQUIPMENT

(In the Course of Preparation)

SECTION GE
HYDROGEN RECOMBINERS

(In the Course of Preparation)

SECTION GF
GAS SAMPLING

(In the Course of Preparation)

Copyright ASME International
Provided by IHS under license with ASME
No reproduction or networking permitted without license from IHS
Not for Resale

Division IV
Testing Procedures

Copyright ASME International
Provided by IHS under license with ASME
No reproduction or networking permitted without license from IHS
Not for Resale

SECTION TA
FIELD TESTING OF AIR TREATMENT SYSTEMS

TA-1000	**Introduction**	494
TA-1100	Scope	494
TA-2000	**Referenced Documents**	496
TA-3000	**General Inspection and Test Requirements**	497
TA-3100	General	497
TA-3200	Test Instruments	497
TA-3300	Reference Values	498
TA-3400	Inspections and Test Requirements	498
TA-3500	Generic Tests	499
TA-3600	Acceptance Criteria	500
TA-4000	**Field Acceptance Tests**	501
TA-4100	Fan Acceptance Tests	501
TA-4200	Damper Acceptance Tests	503
TA-4300	Duct, Housing, and Mounting Frame Acceptance Tests	505
TA-4400	Refrigeration Equipment Acceptance Tests	505
TA-4500	Conditioning Equipment Acceptance Tests	507
TA-4600	Moisture Separator, Prefilter, HEPA Filter Bank Acceptance Tests	509
TA-4700	Type II and Type III Adsorber Bank Acceptance Tests	510
TA-4800	Adsorbent Acceptance Tests	512
TA-4900	Integrated System Tests	512
TA-5000	**Corrective Action Requirements**	514
TA-6000	**Quality Assurance**	515
TA-6100	General	515
TA-6200	Personnel	515
TA-6300	Documentation	515

Tables

TA-3200	Instrument Accuracy Requirements	498
TA-3400	Test Designations	499
TA-4110	Fan Acceptance Tests	502

Copyright ASME International
Provided by IHS under license with ASME
No reproduction or networking permitted without license from IHS
Not for Resale

TA-4210	Damper Acceptance Tests	503
TA-4310	Duct, Housing, and Frame Acceptance Tests	505
TA-4410	Refrigeration Equipment Acceptance Tests	506
TA-4510	Conditioning Equipment Acceptance Tests	507
TA-4610	Moisture Separator, Prefilter, and HEPA Filter Acceptance Tests	509
TA-4710	Type II and Type III Adsorber Bank Acceptance Tests	510

Mandatory Appendices

TA-I	Visual Inspection Items	516
TA-II	Structural Capability Test Procedural Guidelines	518
TA-III	Duct and Housing Leak Test Procedural Guidelines	523
TA-IV	Airflow Distribution Test Procedural Guidelines	528
TA-V	Air-Aerosol Mixing Test Procedural Guidelines	532
TA-VI	HEPA Filter Bank In-Place Leak Test Procedural Guidelines	536
TA-VII	Adsorber Bank In-Place Leak Test Procedural Guidelines	540
TA-VIII	Refrigerant Piping and Coil System Leak Test Procedural Guidelines	544

Nonmandatory Appendices

TA-A	Mounting Frame Pressure Leak Test Procedural Guidelines	548
TA-B	Corrective Action Guidance	552
TA-C	Challenge Gas Substitute Selection Criteria	553

Copyright ASME International
Provided by IHS under license with ASME
No reproduction or networking permitted without license from IHS
Not for Resale

ARTICLE TA-1000
INTRODUCTION

TA-1100 SCOPE

This section provides requirements for the field acceptance testing of safety-related air treatment, heating, ventilating, and air conditioning systems in nuclear facilities.

TA-1110 PURPOSE

The purpose of this section is to provide requirements for field acceptance testing, the results of which are used to verify that nuclear air treatment, heating, ventilating, and air conditioning systems perform their intended function.

TA-1120 APPLICABILITY

This section applies to acceptance testing of nuclear safety-related air treatment, heating, ventilating, and air conditioning systems that are assembled, installed, and ready for use. Included are requirements for integrated system performance testing under simulated conditions of operation. It is the Owner's responsibility to meet each of the applicable requirements in this section.

TA-1130 DEFINITIONS AND TERMS

The definitions provided in this section supplement those listed in Article AA-1000.

abnormal incident: any event or condition that may adversely affect the functionality of the nuclear air treatment, heating, ventilating, and air conditioning system.

acceptance test: a test to verify system or component design function following initial field installation, an abnormal incident, replacement, repair, or modification affecting a test reference value.

adsorbent: a solid having the ability to concentrate other substances on its surface.

adsorber: a device or vessel containing adsorbent.

adsorber bank or filter bank: one or more filters or adsorbers secured in a single mounting frame, or one or more side-by-side panels containing poured or packed air treatment media, confined within the perimeter of a duct, plenum, or vault cross-section, sometimes referred to as a stage.

aerosol: a stable suspension of particles, solid or liquid, in air.

challenge: to expose a filter, adsorber, or other air treatment device to an aerosol or gas of known characteristics, under specified conditions, for the purpose of testing.

challenge aerosol: poly-disperse droplets of dioctyl phthalate [di(2-ethyl hexyl) phthalate] used as challenge aerosol for testing HEPA filter banks for leaks. The challenge aerosol for in-place leak testing of HEPA filter systems, in accordance with this section, is poly-disperse DOP liquid aerosol having an approximate light-scattering droplet size distribution as follows:

(a) 99% less than 3.0 μm diameter
(b) 50% less than 0.7 μm diameter
(c) 10% less than 0.4 μm diameter

NOTE: The poly-disperse aerosol used for in-place leak testing of systems differs in size from the 0.3 micrometer mono-disperse DOP aerosol used for efficiency testing of individual HEPA filters by manufacturers.

challenge gas: a gas of known characteristics, under specified conditions, used for the purpose of testing. For in-place testing of adsorbers, the challenge gas is to be Refrigerant-11 or an acceptable substitute.

NOTE: For challenge gas substitution selection criteria, refer to Nonmandatory Appendix TA-C.

HEPA (high efficiency particulate air) filter: a disposable, extended-media, dry-type filter enclosed in a rigid

Copyright ASME International
Provided by IHS under license with ASME
No reproduction or networking permitted without license from IHS
Not for Resale

casing that has a minimum efficiency of 99.97% when tested with an essentially mono-disperse 0.3 μm test aerosol.

in-service test: a test to determine the operational readiness of a component/system.

pressure, maximum operating: the maximum pressure the system components will be subjected to while performing their function. The allowable pressure during abnormal operating conditions that will not physically damage the system (e.g., sudden closure of dampers or registers) shall be considered maximum operating pressure.

pressure, operating: the pressure that corresponds to the normal design operating mode of the system. This pressure is less than or equal to the maximum operating pressure.

pressure, structural capability: the pressure to which the designer specifies the component or system can be safely operated without permanent distortion.

reference value: one or more achieved values or test parameters that are measured, observed, or determined when the equipment or system is known to be operating acceptably within its design basis range.

system: an assembly of components, including associated instruments and controls, required to perform the function of a nuclear air treatment, heating, ventilating, and air conditioning system.

test boundary: the physical limits of the component, system, or device being subjected to a specified test.

test canister: a specially designed sample holder containing adsorbent for laboratory tests that can be removed from an adsorber bank, without disturbing the remainder of the adsorber, to provide representative samples for laboratory testing.

Copyright ASME International
Provided by IHS under license with ASME
No reproduction or networking permitted without license from IHS
Not for Resale

ARTICLE TA-2000
REFERENCED DOCUMENTS

The documents listed below shall supplement those listed in Article AA-2000.

ANS 3.1, Selection Qualification and Training of Nuclear Power Plant Personnel (current edition)

Publisher: American Nuclear Society (ANS), 555 North Kensington Avenue, LaGrange Park, IL 60526

ASME NQA-1a-1995, Quality Assurance Requirements for Nuclear Facility Applications

Publisher: American Society of Mechanical Engineers (ASME International), Three Park Avenue, New York, NY 10016-5990; Order Department: 22 Law Drive, Box 2300, Fairfield, NJ 07007-2300

ASTM D 3803-1989, Standard Test Method for Nuclear Grade Activated Carbon

Publisher: American Society for Testing and Materials (ASTM), 100 Barr Harbor Drive, West Conshohocken, PA 19428-2959

HVAC Systems Testing, Adjusting, and Balancing (1983)

Publisher: Sheet Metal and Air Conditioning Contractors' National Association (SMACNA), 4201 Lafayette Center Drive, Chantilly, VA 20151-1209

Industrial Ventilation: A Manual of Recommended Practice (current edition)

Publisher: American Conference of Government Industrial Hygienists (ACGIH), 1330 Kemper Meadow Drive, Cincinnati, OH 45240

National Standard of Total System Balance (1989)

Publisher: Associated Air Balance Council (AABC), 1518 K Street, NW, Washington, DC 20005

Procedural Standards for Testing, Adjusting, and Balancing of Environmental Systems (1991)

Publisher: National Environmental Balancing Bureau (NEBB), 8575 Grovemont Circle, Gaithersburg, MD 20877

Copyright ASME International
Provided by IHS under license with ASME
No reproduction or networking permitted without license from IHS
Not for Resale

ARTICLE TA-3000
GENERAL INSPECTION AND TEST REQUIREMENTS

TA-3100 GENERAL

All inspections and tests shall be conducted in accordance with these requirements and the specific requirements of Article TA-4000.

NOTE: Activities in this section may involve the use of hazardous materials, operations, and equipment. This section does not purport to address all of the safety requirements associated with their use. It is the responsibility of the user of this section to establish appropriate safety and health practices and determine the applicability of regulatory requirements prior to use.

TA-3200 TEST INSTRUMENTS

A calibration program shall be established in accordance with the Owner's quality assurance program. All permanent and temporary test instruments used in the conduct of tests required by Article TA-4000 shall be in calibration. Instrument accuracy shall meet or exceed the requirements of Table TA-3200.

TA-3210 RANGE REQUIREMENTS

The full-scale range of instruments shall be limited as necessary to ensure that the readings are within the accuracy requirements of Table TA-3200.

TA-3220 INSTRUMENT FLUCTUATION

Symmetrical damping devices or averaging techniques may be used to reduce random signal fluctuations. Hydraulic instruments may be damped by using gauge snubbers or by throttling valves in instrument lines.

TA-3230 EVALUATION FOLLOWING TEST INSTRUMENT LOSS, DAMAGE, OR CALIBRATION FAILURE

When a test instrument is lost, damaged, or otherwise fails to meet the requirements of Table TA-3200 during calibration, all test results obtained using the instrument shall be evaluated, dating back to the time of the previous calibration. If the evaluation does not confirm that the instrument met the acceptance criteria for the test(s) in question, the test(s) shall be repeated with calibrated instruments.

TA-3240 SPECIFIC INSTRUMENT ACCURACY REQUIREMENTS

TA-3241 Vibration Instrument

Vibration instrument accuracy shall be at least ±10%. The minimum frequency response range of the vibration measuring instrument shall be approximately one third of the minimum shaft speed. For rotating components, the maximum frequency response range shall be at least two times the rotational shaft speed of the component being measured. For reciprocating components, the maximum frequency response range shall be at least two times the speed of the crankshaft, times the number of unique planes occupied by a piston throw.

TA-3242 Challenge Aerosol-Measuring Instrument

The challenge aerosol-measuring instrument shall be verified to have a linear range of at least 10^5 times the minimum detectible quantity of the instrument with an accuracy in accordance with the facility project specifications and Owner's quality assurance program.

TA-3243 Challenge Gas-Measuring Instrument

The challenge gas-measuring instrument shall be verified to be capable of distinguishing challenge gas from background, and measuring challenge gas over a linear range of at least 10^5 times the minimum detectible quantity of the instrument with an accuracy in accordance with the facility project specifications and Owner's quality assurance program.

Copyright ASME International
Provided by IHS under license with ASME
No reproduction or networking permitted without license from IHS
Not for Resale

TABLE TA-3200
INSTRUMENT ACCURACY REQUIREMENTS

Measurement	Range	Accuracy
Pressure	>1.0 psig [>7.0 kPa (gage)]	±2.0%
Pressure	from 1.0 in. wg to 1.0 psig [0.25 kPa to 7.0 kPa (gage)]	±0.1 in. wg (±0.025 kPa)
Pressure	from 0.1 in. wg to 1.0 in. wg [25 Pa to 250 Pa (gage)]	±0.01 in. wg (±2.5 Pa)
Temperature	Variable	±2.0°F (±1.0°C)
Temperature [Note (1)]	Variable	±0.5°F (±0.25°C)
Vibration	Variable	Per TA-3241
Flow	Variable	±5.0%
Velocity (airflow)	Variable	±3.0%
Speed	Variable	±2.0%
Time	Variable	±1.0 sec
Electrical voltage	Variable	±1.0%
Electrical resistance	Variable	±1.0%
Challenge aerosol concentration	. . .	Per TA-3242
Challenge gas concentration	. . .	Per TA-3243

NOTE:
(1) Required for pressure testing in Mandatory Appendix TA-III.

TA-3300 REFERENCE VALUES

TA-3310 ESTABLISHMENT OF REFERENCE VALUES

Reference values shall be determined from results achieved during acceptance testing (see Article TA-4000), when a component or system is proven to be operating within the acceptable limits of the Owner's design specification. Operating tests and inspections specified in Article TA-4000 shall be observed, measured, or calculated under conditions readily reproducible during subsequent in-service tests to allow for direct comparison of test results. All test results and associated analyses shall be included in the test procedure documentation (see TA-6300).

TA-3400 INSPECTIONS AND TEST REQUIREMENTS

Acceptance tests shall be conducted following initial component installation but prior to releasing the system for normal operations. Applicable acceptance tests shall also be used to obtain new reference values and verify design function following component replacement, repair, modification, or maintenance. Equipment shall be evaluated as separate components and as functioning parts of an integrated system. The Owner shall define system test boundaries and evaluate system performance with respect to system functional requirements in accordance with the Owner's design specifications. Field acceptance tests shall be implemented as applicable and in accordance with this section.

Test designations associated with tests required by Article TA-4000 are listed in Table TA-3400. Within the context of Article TA-4000, when a test is not associated with a designator it shall be considered a prudent action and not a test requirement.

TA-3410 INSPECTION AND TEST PARAMETERS

Parameters which need to be observed, calculated, and recorded in order to meet the requirements of this section shall be identified for each system based on the functional requirements of the Owner's design specification and shall be included in the test procedure documentation (see TA-6300).

TA-3420 SYSTEM OPERATING CONDITIONS

Operating conditions required for acceptance testing shall be determined for each system. These conditions

Copyright ASME International
Provided by IHS under license with ASME
No reproduction or networking permitted without license from IHS
Not for Resale

TABLE TA-3400
TEST DESIGNATIONS

Test	Designator
Air-aerosol mixing test	AA
Airflow distribution test	AD
Differential pressure test	DP
Differential temperature test	DT
Flow rate test	Qf
Functional test [Note (1)]	F
Hydrostatic test	HYD
In-place leak test	IP
Laboratory analysis (adsorbent methyl-iodide penetration)	LAB
Electrical performance test	AMP
Leak test	PL
Structural capability test	PS
Rotational speed test	N
Bearing temperature test	Tb
Vibration test	Vb
Visual inspection	VT

NOTE:
(1) Functional tests consist of various mechanical actuation and performance verifications and are detailed separately in each test article.

and acceptance criteria shall be based on the requirements of the Owner's design specification and shall be included in the test procedure documentation (see TA-6300).

TA-3430 PROCEDURE REQUIREMENTS

The Owner shall be responsible for the development and implementation of written test procedures that meet the requirements of this section. Each equipment test section consists of generic (see TA-3500) and specific (see Article TA-4000) test requirements and acceptance criteria which apply to each of the systems in the facility. The Owner shall document which requirements are applicable in the test procedure documentation (see TA-6300).

TA-3440 TEST REPORTS

Test reports shall be prepared in accordance with TA-6300.

TA-3500 GENERIC TESTS

Generic tests as specified in TA-3510 through TA-3533 shall be used in Article TA-4000 where applicable.

TA-3510 VISUAL INSPECTIONS (VT)

Visual inspections shall be conducted in accordance with Article AA-5000 and the applicable portions of Mandatory Appendix TA-I. Field acceptance visual inspections, required in Article TA-4000, shall include verification of component installation in accordance with the Owner's design specification and the applicable sections of this Code. Acceptance inspections shall be conducted prior to releasing the equipment for normal operation.

TA-3520 PRESSURE BOUNDARY TESTS

Pressure boundary tests consist of hydrostatic (or pneumatic) tests for hydronic systems, leak tests for refrigerant systems, and structural capability and leak tests for ducts and housings, including fan and damper housings.

TA-3521 Hydrostatic Tests (HYD)

Hydrostatic tests shall be conducted at the hydrostatic pressure defined by the Owner and shall verify that the component will not rupture, leak, or be permanently deformed under design pressure loads. Testing shall be conducted in accordance with the design codes used in the Owner's design specification (e.g., ASME B31.1). Pneumatic testing may be used in lieu of water where allowed by the applicable codes and in the Owner's design specification.

TA-3522 Structural Capability Test (PS)

Structural capability tests shall be conducted at the structural capability pressure defined by the Owner's design specification and shall verify that the component will not rupture or be permanently deformed under design pressure loads. Testing shall be conducted in accordance with Mandatory Appendix TA-II.

TA-3523 Leak Test for Duct, Housing, and Frames (PL)

Leak tests for duct and housing sections shall be conducted using either the pressure decay method or the constant pressure method to verify that the leak rate for duct or housing does not exceed the allowable limit established for the system. Testing shall be conducted in accordance with Mandatory Appendix TA-III. Leak testing performed to satisfy Section SA of this Code may be used to meet these test requirements

Copyright ASME International
Provided by IHS under license with ASME
No reproduction or networking permitted without license from IHS
Not for Resale

when the test method is compatible with Mandatory Appendix TA-III.

An optional leak test for HEPA filter and adsorber mounting frames is authorized to be conducted in conjunction with the housing leak test by blanking off the frame openings and pressurizing the isolated test boundary. This procedure is useful for detecting small leaks in the mounting frame during acceptance testing. This test is used to verify that there are no defects in a frame that may cause failure of the in-place leak test. Testing should be conducted in accordance with Nonmandatory Appendix TA-A.

TA-3524 Leak Test for Refrigerant Piping and Coils (PL)

Leak tests of refrigerant piping and coils shall be conducted in accordance with Mandatory Appendix TA-VIII.

TA-3530 FUNCTIONAL TESTS (F)

A functional test shall be used to verify mechanical and system performance parameters of equipment. Functional tests include component and system tests as required in Article TA-4000. Component functional tests are used to verify the operational readiness of individual components. Integrated system functional tests are used to verify that all of the system components will operate together under normal operating or simulated conditions and will meet all of the performance requirements of the Owner's design specification.

TA-3531 Test Conditions

Equipment shall be tested within the normal operating range specified in the Owner's design specification except as otherwise specified in Article TA-4000.

TA-3532 Restoration of Function Following Testing

Mechanical and electrical equipment status shall be restored as required by plant conditions and according to approved procedures following completion of any test.

TA-3533 Vibration Test (Vb)

Vibration measurements shall be taken on the accessible motor, fan, compressor, and pump bearing housings in at least two different orthogonal planes approximately perpendicular to the line of the rotating shaft. When the bearing housing is not accessible, the frame of the component may be used if it will be representative of bearing housing vibration. When portable vibration instruments are used, reference points shall be clearly identified on the component being measured to permit duplication in both location and plane.

TA-3600 ACCEPTANCE CRITERIA

Results of tests described in Article TA-4000 shall be subject to the acceptance criteria in TA-3610 through TA-3630 and to the applicable operating and design criteria specified by the Owner's design specification. Acceptance criteria are specified in Article TA-4000 only when they affect the quality of other tests. When test results do not meet the applicable acceptance criteria, the corrective actions required by Article TA-5000 shall be initiated.

TA-3610 VISUAL INSPECTION

Visual inspections are acceptable when there are no visual indications of improper installation, physical damage, structural distress or degradation that would impair the ability of a component or system to perform its intended function.

TA-3620 PRESSURE BOUNDARY TESTS

Pressure boundary tests are acceptable when there is no permanent structural deformation or leaks in excess of the limits specified in the applicable sections of this Code and the Owner's design specification.

TA-3630 FUNCTIONAL TESTS

Functional tests are acceptable when they meet the requirements of the applicable sections of this Code and the Owner's design specification.

Copyright ASME International
Provided by IHS under license with ASME
No reproduction or networking permitted without license from IHS
Not for Resale

ARTICLE TA-4000
FIELD ACCEPTANCE TESTS

Field acceptance tests shall be conducted following initial system installation but prior to releasing the equipment for normal operation. Applicable inspections and tests shall be conducted to verify compliance with the Owner's design specifications following equipment replacement, modification, or abnormal incident. Repair or maintenance that has not affected acceptance test reference values does not require repeating acceptance tests. Within the context of Article TA-4000, a test not associated with a test designator is considered to be a prudent action and not a test requirement.

TA-4100 FAN ACCEPTANCE TESTS

This section provides the field acceptance test requirements for fans, motors, and related accessories. Integrated system testing shall be conducted in accordance with TA-4900.

TA-4110 ACCEPTANCE TEST REQUIREMENTS

Acceptance tests shall be conducted with the fan operating at a flow rate within the normal operating range for the system. The tests listed in Table TA-4110 shall be conducted and test results verified to be within the acceptance limits of the Owner's design specification, the applicable portions of Section BA of this Code, and as required in TA-3600 and TA-4160. These test results shall be documented in accordance with TA-6300 and shall be retained as reference values for comparison during periodic in-service tests.

TA-4120 VISUAL INSPECTION (VT)

A visual inspection of the fan and associated components shall be conducted in accordance with TA-3510 and Mandatory Appendix TA-I (TA-I-1100).

TA-4130 PRESSURE BOUNDARY TESTS

TA-4131 Structural Capability Test (PS)

When a fan housing is part of the system pressure boundary, a structural capability test shall be conducted to verify structural capability of the fan housing and connections in accordance with TA-3522 and Mandatory Appendix TA-II. The fan housing may be tested concurrent with the duct and housing structural capability test specified in TA-4331.

TA-4132 Leak Test for Fan Housing (PL)

When a fan housing is part of the system pressure boundary, a pressure boundary leak test shall be conducted to verify the leak-tightness of the fan housing and attached interfaces in accordance with TA-3523 and Mandatory Appendix TA-III. The fan housing may be tested concurrent with the duct and housing leak test specified in TA-4332.

TA-4133 Leak Test for Fan Shaft Seal (PL)

When a fan shaft seal is part of the system pressure boundary, a pressure boundary leak test shall be conducted to verify the leak tightness of the shaft seal in accordance with TA-3523 and Mandatory Appendix TA-III. The shaft seal may be tested concurrent with the duct and housing leak test specified in TA-4332. However, the shaft seal leakage rate shall be evaluated (qualitatively) independent of the overall system leak rate. The qualitative evaluation of the leakage shall be included in the test report.

TA-4140 COMPONENT FUNCTIONAL TESTS

The following prerequisites shall be conducted on the fan and motor assemblies prior to the system functional tests specified in TA-4150.

Copyright ASME International
Provided by IHS under license with ASME
No reproduction or networking permitted without license from IHS
Not for Resale

TABLE TA-4110
FAN ACCEPTANCE TESTS

Test(s)	Designator	Measure	Observe
Visual inspection	VT		x
Structural capability	PS	x	
Leak	PL	x	
System flow balance	F	x	
Mechanical run	F		x
Flow rate	Qf	x	
Differential pressure	DP	*	
Electrical	AMP	x	
Rotational speed	N	x	
Vibration	Vb	x	
Bearing temperature	Tb	x	
Fan performance/airflow capacity	F	x	

TA-4141 Electrical Prerequisites

Prior to the initial energizing of the fan, the electrical power circuits shall be checked for installation, circuit continuity, voltage capacity, and protective relay device settings.

TA-4142 Control System Prerequisites

Prior to the initial energizing of the fan, controls shall be calibrated and verified operational.

TA-4143 Start-up Prerequisites

Prior to the initial energizing of the fan, the fan and motor shaft shall be manually rotated to verify moving parts are free of interference. The motor shall be momentarily energized to verify correct rotational direction. The fan shall be restarted and stable operation (no surging) verified. Fan and motor vibration, bearing temperature, motor electrical amperage, and phase balance, fan speed, differential pressure, and airflow shall be monitored. Following one hour of operation, or immediately after observation of unusual performance (i.e., unstable performance), the fan shall be secured and a detailed visual inspection for signs of damage or degradation shall be conducted.

TA-4150 SYSTEM FUNCTIONAL TESTS

This section provides the system-level field acceptance test requirements for fan systems.

TA-4151 System Flow Balance Test (F)

A system flow balance shall be conducted. Recommended procedures include SMACNA, NEBB, ACGIH, or AABC (see Article TA-2000).

System flow balancing may be conducted using artificial resistance in lieu of filters. However, final component reference values shall be obtained with clean system components installed.

TA-4152 through TA-4159 shall be conducted in the same time frame.

TA-4152 Mechanical Run Test (F)

Prior to conducting the tests specified in TA-4153 through TA-4159, the fan shall be operated at the design flow rate for at least 15 min and stable system operation (no surging) verified.

TA-4153 Flow Rate Test (Qf)

The fan flow rate shall be measured. Recommended procedures include ACGIH Industrial Ventilation or equivalent.

TA-4154 Static Pressure Test (DP)

The fan inlet and outlet static pressure and velocity pressure shall be measured and the overall fan static pressure determined.

TA-4155 Electrical Tests (AMP)

The fan motor supply voltage and amperage shall be measured for each phase.

TA-4156 Rotational Speed Test (N)

The rotational speed of the fan shall be measured.

TA-4157 Vibration Test (Vb)

The vibration of each fan and motor bearing shall be measured in accordance with TA-3533.

TA-4158 Bearing Temperature Test (Tb)

Following bearing temperature stabilization, the fan and motor bearing temperatures shall be measured. Stabilization occurs when temperature changes are less than or equal to ±3°F (1.5°C) in a 10 min period.

Copyright ASME International
Provided by IHS under license with ASME
No reproduction or networking permitted without license from IHS
Not for Resale

TA-4159 Fan Performance/Airflow Capacity Test (F)

For systems with filter or adsorber banks, the fan performance shall be measured under maximum design dirty filter conditions. This may be done by increasing the system resistance to the design dirty filter differential pressure, (design basis maximum dirty filter condition), using artificial resistance. The measurement procedures in TA-4152 through TA-4158 shall be used.

TA-4160 ACCEPTANCE CRITERIA

The following acceptance criteria are in addition to the requirements of TA-3600.

TA-4161 Airflow Capacity Test Acceptance Criteria

Airflow capacity shall be within ±10% of design when tested in the normal clean and maximum dirty filter conditions.

TA-4162 Fan Performance Acceptance Criteria

Fan performance (flow, static pressure, horsepower) shall meet the specifications of the Manufacturer's fan performance curve and the Owner's design specification.

TA-4200 DAMPER ACCEPTANCE TESTS

This section provides the field acceptance test requirements for dampers and related accessories. Integrated system testing shall be conducted in accordance with TA-4900.

TA-4210 ACCEPTANCE TEST REQUIREMENTS

Acceptance tests shall be conducted with the dampers installed in the system. The tests listed in Table TA-4210 shall be conducted and test results verified to be within the acceptance limits of the Owner's design specification, the applicable portions of Section DA of this Code, and as required in TA-3600. These test results shall be documented in accordance with TA-6300 and shall be retained as reference values for comparison to periodic in-service test results.

TABLE TA-4210
DAMPER ACCEPTANCE TESTS

Test(s)	Designator	Measure	Observe
Visual inspection	VT		x
Structural capability	PS	x	
Leak	PL	x	
Position indication	F	x	
Exercise	F		x
Static timing	F	x	
Flow control	F		x
Fire damper	F		x
Dynamic time	F	x	
Interlock	F		x

TA-4220 VISUAL INSPECTION (VT)

A visual inspection of the damper and associated components shall be conducted in accordance with TA-3510 and Mandatory Appendix TA-I, TA-I-1200.

TA-4230 PRESSURE BOUNDARY TESTS

TA-4231 Structural Capability Test for Damper Housing (PS)

When the damper housing and actuator shaft seal are part of the system pressure boundary, a structural capability test shall be conducted to verify the structural capability of the damper housing, shaft seal, and interfaces in accordance with TA-3522 and Mandatory Appendix TA-II. The damper housing may be tested concurrent with the duct and housing structural capability test specified in TA-4331.

TA-4232 Structural Capability Test for Damper Blades (PS)

Isolation dampers shall be tested to verify the structural capability of the damper blade and seat in accordance with TA-3522 and Mandatory Appendix TA-II. The damper blades and seat may be tested concurrent with the duct and housing structural capability test specified in TA-4331.

TA-4233 Leak Test for Damper Housing (PL)

When a damper housing is part of the system pressure boundary, a pressure boundary leak test shall be conducted to verify leak-tightness of the damper housing and interfaces in accordance with TA-3523 and Mandatory Appendix TA-III. The damper housing may be

Copyright ASME International
Provided by IHS under license with ASME
No reproduction or networking permitted without license from IHS
Not for Resale

tested concurrent with the duct and housing leak test specified in TA-4332.

TA-4234 Leak Test for Damper Shaft Seal (PL)

When a damper shaft seal is part of the system pressure boundary, a pressure boundary leak test shall be conducted to verify leak-tightness of the shaft seal in accordance with TA-3523 and Mandatory Appendix TA-III. The shaft seal may be tested concurrent with the duct and housing leak test specified in TA-4332. However, the shaft seal leak rate shall be evaluated (qualitative) independently of the overall system leak rate. The qualitative evaluation of the leakage shall be included in the test report.

TA-4235 Leak Test for Damper Seat (PL)

When dampers have seat leakage limits, a leak test shall be conducted in the direction the damper is expected to function, in accordance with TA-3523 and Mandatory Appendix TA-III. The seat leak rate shall be tested by blanking off or otherwise isolating a duct section upstream of the damper. The leak test shall be performed with the damper cycled closed using its normal closing mechanism (without any additional manual assistance).

TA-4240 COMPONENT FUNCTIONAL TESTS

Component functional tests shall verify that the damper is operational prior to conducting the system functional tests specified in TA-4250.

TA-4241 Electrical Prerequisites

Prior to the initial energizing of the damper operator, the electrical circuits shall be checked for proper installation, circuit continuity, voltage capacity and protective relay device settings.

TA-4242 Pneumatic Prerequisites

Prior to the initial pressurizing of the damper control system, pneumatic systems shall be checked for proper installation and leak-tightness.

TA-4243 Control System Prerequisites

Prior to the initial energizing of the damper operator, control instrumentation shall be calibrated and verified to be operational.

TA-4244 Position Indication Test (F)

Dampers having remote position indicators shall be observed during operation to verify that the mechanical damper position corresponds to the remote indication.

TA-4245 Exercise Test (F)

Power-operated dampers shall be fully cycled using a control switch or other actuating device to verify operation. Manual dampers, including balancing dampers, shall be fully cycled to verify operation. Fire dampers shall be tested in accordance with TA-4252.

TA-4246 Static Timing Test (F)

Power-operated dampers (electrical or pneumatic), that are required to operate within a specified time limit, shall be tested by measuring time for the damper to fully open or fully close (as required by the Owner's design specification).

TA-4250 SYSTEM FUNCTIONAL TESTS

TA-4251 Flow Control Damper Functional Test (F)

Power-operated dampers that control airflow shall be observed under throttled (throughout its anticipated operating range) flow conditions to verify free movement and stable operation.

TA-4252 Fire Damper Test (F)

Fire dampers shall be tested, using a normal or simulated actuation signal, to verify activation under design airflow conditions.

TA-4253 Dynamic Timing Test (F)

Isolation dampers having a required actuation response time shall be timed to the fully open or fully closed position (as required by the Owner's design specification) under design airflow conditions.

Copyright ASME International
Provided by IHS under license with ASME
No reproduction or networking permitted without license from IHS
Not for Resale

TABLE TA-4310
DUCT, HOUSING, AND FRAME ACCEPTANCE TESTS

Test(s)	Designator	Measure	Observe
Visual inspection	VT		x
Structural capability	PS	x	
Leak	PL	x	

TA-4254 Interlock Test (F)

Dampers that have an opening or closing function interlocked with other components (e.g., fans, other dampers) shall be tested to verify interlock action.

TA-4300 DUCT, HOUSING, AND MOUNTING FRAME ACCEPTANCE TESTS

This section provides the field acceptance test requirements for ducts, housings, and mounting frames.

TA-4310 ACCEPTANCE TEST REQUIREMENTS

Acceptance tests shall be conducted with the ducts, housings and mounting frames installed in the system. The tests listed in Table TA-4310 shall be conducted and test results verified to be within the acceptance limits of the Owner's design specification, the applicable portions of Section SA of this Code, and as required in TA-3600. These test results shall be documented in accordance with TA-6300 and shall be retained as reference values for comparison to periodic in-service test results.

TA-4320 VISUAL INSPECTION (VT)

A visual inspection of ducts, housings, and mounting frames, shall be conducted in accordance with TA-3510 and Mandatory Appendix TA-I (TA-I-1300).

TA-4330 PRESSURE BOUNDARY TESTS

Pressure boundary tests apply to all ducts, housings and interface connections that are parts of the system. Individual components may be tested at separate times provided that all system pressure boundaries are ultimately tested prior to the system being placed into service.

TA-4331 Structural Capability Test for Duct and Housing (PS)

A structural capability test shall be conducted to verify structural capability of ducts and housings in accordance with TA-3522 and Mandatory Appendix TA-II.

TA-4332 Leak Test for Duct and Housing (PL)

A pressure boundary leak test shall be conducted to verify leak-tightness of the ducts and housings in accordance with TA-3523 and Mandatory Appendix TA-III.

TA-4333 Optional Leak Test for Mounting Frame (PL)

A mounting frame pressure leak test may be used to detect leaks in the HEPA filter and adsorber mounting frames that could affect the results of the in-place leak tests in TA-4600 and TA-4700. This test is optional and may be conducted in accordance with Nonmandatory Appendix TA-A.

TA-4400 REFRIGERATION EQUIPMENT ACCEPTANCE TESTS

This section provides the field acceptance test requirements for refrigeration equipment. Integrated system testing shall be conducted in accordance with TA-4900.

TA-4410 ACCEPTANCE TEST REQUIREMENTS

Acceptance tests shall be conducted with the refrigeration equipment in service under normal operating conditions. The tests listed in Table TA-4410 shall be conducted and test results verified to be within the acceptance limits of the Owner's design specification, applicable portions of Section RA of this Code, and as required in TA-3600. These test results shall be documented in accordance with TA-6300 and shall be retained as reference values for comparison to periodic in-service test results.

TA-4420 VISUAL INSPECTION (VT)

A visual inspection of the refrigeration equipment components shall be conducted in accordance with TA-3510 and Mandatory Appendix TA-I, TA-I-1400.

Copyright ASME International
Provided by IHS under license with ASME
No reproduction or networking permitted without license from IHS
Not for Resale

TABLE TA-4410
REFRIGERATION EQUIPMENT ACCEPTANCE TESTS

Tests	Designator	Measure	Observe
Visual inspection	VT		x
Leak	PL		x
Hydrostatic	HYD		x
Valve position indication	F		x
Valve exercise	F		x
Valve timing	F	x	
Flow control valve	F		x
Mechanical run	F		x
Performance	F	x	
Electrical	AMP	x	
Rotational speed	N	x	
Vibration	Vb	x	
Bearing temperature	Tb	x	

TA-4430 PRESSURE BOUNDARY TESTS

TA-4431 Leak Test for Refrigerant Piping and Coil (PL)

Refrigeration systems, including piping, coils, and pressure vessels, shall have a pressure test conducted to verify structural integrity and leak-tightness. Testing shall be conducted in accordance with TA-3524 and Mandatory Appendix TA-VIII.

TA-4432 Hydrostatic Test for Hydronic Piping and Coils (HYD)

Hydronic piping, coils and pressure vessels, shall have a hydrostatic test conducted to verify structural integrity and leak-tightness. Testing shall be conducted in accordance with TA-3521.

TA-4440 COMPONENT FUNCTIONAL TESTS

The following component functional tests and prerequisites shall be conducted to verify that the refrigeration system equipment is operating acceptably prior to conducting the system functional tests specified in TA-4450. Fans shall be tested in accordance with TA-4100.

TA-4441 Electrical Prerequisites

Prior to the initial energizing of the refrigeration system components, the electrical circuits shall be checked for installation, circuit continuity, voltage capacity, and protective relay device settings.

TA-4442 Control System Prerequisites

Prior to the initial energizing of the refrigeration system components, the system controls shall be calibrated and verified operational.

TA-4443 Valve Position Indication Test (F)

Valves having remote position indicators shall be observed during valve full stroke operation to verify that the valve position corresponds to the remote indication.

TA-4444 Valve Exercise Test (F)

Power-operated valves shall be fully cycled using a control switch or other actuating device to verify operation. Manual valves shall be fully cycled to verify operation.

TA-4445 Valve Timing Test (F)

Power-operated valves that are required to operate within a specified time limit shall be tested by measuring the time to fully cycle.

TA-4446 Start-up Prerequisites

Correct direction of rotation shall be verified for compressor motors. Start the compressor motor, verify stable operation and monitor the compressor motor electrical supply voltage, amperage and phase balance, vibration, bearing temperatures, and rotational speed, as applicable. Following one hour of operation, or immediately after observation of unusual performance (unstable operation), the equipment shall be secured and a detailed visual inspection conducted for signs of damage or degradation.

TA-4450 SYSTEM FUNCTIONAL TESTS

The refrigeration equipment shall be tested to verify mechanical component integrity and design cooling function. TA-4451 through TA-4457 shall be conducted in the same time frame.

TA-4451 Flow Control Valve Test (F)

Power-operated valves, controlled by flow instrumentation, shall be observed under throttled (throughout its anticipated operating range) flow conditions to verify freedom of movement, stable operation, and ability to maintain required flow.

Copyright ASME International
Provided by IHS under license with ASME
No reproduction or networking permitted without license from IHS
Not for Resale

TA-4452 Mechanical Run Test (F)

The refrigeration compressor shall be operated with the system in the normal heat load range for at least 15 minutes and stable system operation verified.

TA-4453 Performance Test (F)

The refrigeration compressor inlet and outlet pressure and temperature shall be measured with the equipment operating at achievable load points.

TA-4454 Electrical Test (AMP)

The compressor motor electrical supply voltage and amperage shall be measured for each phase.

TA-4455 Rotational Speed Test (N)

The rotational speed of the compressor shall be measured when accessible.

TA-4456 Vibration Test (Vb)

The vibration of each accessible bearing on the compressor and compressor motor shall be measured in accordance with TA-3533.

TA-4457 Bearing Temperature Test (Tb)

Following compressor and compressor motor bearing temperature stabilization, the accessible bearing temperatures shall be measured. Stabilization occurs when temperature changes are less than or equal to ±3°F (1.5°C) in a 10 min period.

TA-4500 CONDITIONING EQUIPMENT ACCEPTANCE TESTS

This section provides the field acceptance test requirements for forced circulation air cooling and heating coils, air washers, evaporative coolers, and electric heating coils. Integrated system testing shall be conducted in accordance with TA-4900.

TA-4510 ACCEPTANCE TEST REQUIREMENTS

Acceptance tests shall be conducted with the conditioning equipment in service under normal operating conditions for the system. The tests listed in Table TA-4510 shall be conducted and test results verified to be within the acceptance limits of the Owner's design specification, the applicable portions of Section CA of this Code, and as required in TA-3600 and TA-4570. These test results shall be documented in accordance with TA-6300 and shall be retained as reference values for comparison to periodic in-service test results.

TABLE TA-4510
CONDITIONING EQUIPMENT ACCEPTANCE TESTS

Test(s)	Designator	Measure	Observe
Visual inspection	VT		x
Hydrostatic	HYD		x
Electric heater step-controller	F		x
Electric heater coil-resistance	F	x	
Electric heater resistance-to-ground	F	x	
Valve performance	F	x	x
Performance	F	x	
Electrical	AMP	x	
Rotational speed	N	x	
Vibration	Vb	x	
Bearing temperature	Tb	x	
Electric heater performance	F	x	
Hydronic system flow balance	F	x	
Hydronic system heater and coil performance	F	x	
Air washer, evaporative cooler performance	F	x	

TA-4520 VISUAL INSPECTION (VT)

A visual inspection of the conditioning equipment components shall be conducted in accordance with TA-3510 and Mandatory Appendix TA-I, TA-I-1500.

TA-4530 PRESSURE BOUNDARY TESTS

TA-4531 Hydrostatic Test, Hydronic Piping and Coils (HYD)

Hydronic piping, coils, and pressure vessels shall have a hydrostatic test conducted to verify structural integrity and leak-tightness. Testing shall be conducted in accordance with TA-3521.

TA-4540 COMPONENT FUNCTIONAL TESTS

The following component functional prerequisites and tests shall be conducted to verify that the conditioning system equipment is operating acceptably prior to con-

Copyright ASME International
Provided by IHS under license with ASME
No reproduction or networking permitted without license from IHS
Not for Resale

ducting the system functional tests specified in TA-4550. Fans shall be tested in accordance with TA-4100. Refrigeration components shall be tested in accordance with TA-4400.

TA-4541 Electrical Prerequisites

Prior to the initial energizing of the conditioning system equipment, the electric circuits shall be checked for proper installation, circuit continuity, voltage capacity, and protective relay device settings.

TA-4542 Control System Prerequisites

Prior to the initial energizing of the conditioning system components, the controls shall be calibrated and verified operational.

TA-4543 Electric Heater Step-Controller Test (F)

Electric heater step controllers shall be tested by initiating a simulated demand signal to verify the heater circuit step controller is operational.

TA-4544 Electric Heater Coil-Resistance Test (F)

The electrical resistance shall be measured across each heater circuit in accordance with CA-5440.

TA-4545 Electric Heater Resistance-to-Ground Test (F)

The electrical resistance to ground shall be measured on each heater circuit.

TA-4546 Valve Performance Tests (F)

Conditioning system valves shall be tested in accordance with TA-4443, TA-4444, and TA-4445.

TA-4547 Start-up Prerequisites

Prior to starting the conditioning system pumps, the pump shaft shall be manually rotated to verify freedom of movement. The motor shall be momentarily energized and the correct direction of rotation verified. Restart the pump motor, verify stable operation, and monitor the pump motor electrical-supply voltage, amperage and phase balance, bearing vibration, bearing temperatures, rotational speed, pump differential pressure, and fluid-system flow rate, as applicable. Following one hour of operation, or immediately after observation of unusual performance (unstable operation), the pump shall be secured and a detailed visual inspection for signs of damage or degradation conducted.

TA-4550 SYSTEM FUNCTIONAL TESTS

The conditioning equipment shall be tested in conjunction with the system to verify mechanical component integrity and design cooling or heating function. TA-4551 through TA-4556 shall be conducted in the same time frame.

TA-4551 Hydronic System Flow Balance Test (F)

A hydronic system flow balance shall be conducted. Recommended procedures include SMACNA, NEBB, or AABC (see Article TA-2000).

TA-4552 Flow-Control Valve Test (F)

Power-operated valves, controlled by flow-control instrumentation, shall be observed under throttled (throughout its anticipated operating range) flow conditions to verify freedom of movement, stable operation, and the ability to maintain required flow.

TA-4553 Mechanical Run Test (F)

The conditioning system pumps shall be operated with the system operating in the normal operating range for at least 15 min and stable system operation (no surging) verified.

TA-4554 Performance Test (F)

The conditioning system pump differential pressure and flow rate shall be measured with the pump operating at achievable flow rates.

TA-4555 Electrical Test (AMP)

The conditioning system pump supply voltage and amperage shall be measured for each phase.

TA-4556 Rotational Speed Test (N)

The rotational speed of the pump shaft shall be measured.

Copyright ASME International
Provided by IHS under license with ASME
No reproduction or networking permitted without license from IHS
Not for Resale

TA-4557 Vibration Test (Vb)

The vibration of each bearing on the pump and motor shall be measured in accordance with TA-3533.

TA-4558 Bearing Temperature Test (Tb)

Following pump and motor bearing temperature stabilization, the bearing temperature shall be measured. Stabilization occurs when temperature changes are less than or equal to ±3°F (1.5°C) in a 10 min period.

TA-4559 Electric Heater Performance Test (F)

With design airflow (±10%) through the heater bank, the electrical supply voltage, amperage, and phase balance of each heater circuit, and differential temperature and airflow across the heater bank shall be measured. Following one hour of continuous operation, the heater shall be secured and a detailed visual inspection shall be conducted for signs of damage or degradation.

TA-4560 HYDRONIC SYSTEM HEATING AND COOLING PERFORMANCE TEST (F)

With the conditioning system operating at design airflow (±10%) and design hydronic flow (±10%) and at achievable heat load conditions, the air-side flow, differential temperature and differential pressure, and the hydronic-side flow, differential temperature and differential pressure shall be measured.

TA-4561 Air Washer, Evaporative Cooler Performance Test (F)

A performance test for the conditioning system air washers and evaporative coolers shall be conducted in accordance with Article CA-5000 and Mandatory Appendix CA-II.

TA-4570 ACCEPTANCE CRITERIA

The following acceptance criteria are in addition to TA-3600.

TA-4571 Electrical Heater Ground-Resistance Acceptance Criteria

Conditioning system electric heater resistance to ground shall be greater than 50,000 ohms.

TABLE TA-4610
MOISTURE SEPARATOR, PREFILTER, AND HEPA FILTER ACCEPTANCE TESTS

Test(s)	Designator	Measure	Observe
Visual inspection	VT		x
Differential pressure	DP	x	
Airflow distribution	AD	x	
Air-aerosol mixing	AA	x	
In-place leak [Note (1)]	IP	x	

NOTE:
(1) In-place leak tests are not required on systems used for 100% recirculation (e.g., reactor containment cleanup units), unless the atmospheric cleanup rate is time dependent.

TA-4600 MOISTURE SEPARATOR, PREFILTER, HEPA FILTER BANK ACCEPTANCE TESTS

This section provides the field acceptance test requirements for installed moisture separator, prefilter, and HEPA filter banks.

TA-4610 ACCEPTANCE TEST REQUIREMENTS

Acceptance tests shall be conducted with clean moisture separator, pre-filter and HEPA filter banks installed in the system. The tests in Table TA-4610 shall be conducted and test results verified to be within the acceptance limits of the Owner's design specification, the applicable portions of Sections FA, FB, and FC of this Code and as required in TA-3600 and TA-4640. These test results shall be documented in accordance with TA-6300 and shall be retained as reference values for comparison to periodic in-service test results.

TA-4620 VISUAL INSPECTION (VT)

A visual inspection of the installed moisture separator, prefilter, and HEPA filter banks shall be conducted in accordance with TA-3510 and Mandatory Appendix TA-I, TA-I-1600.

Copyright ASME International
Provided by IHS under license with ASME
No reproduction or networking permitted without license from IHS
Not for Resale

TA-4630 SYSTEM FUNCTIONAL TESTS

TA-4631 Differential Pressure Test (DP)

With the system operating at design flow rate (±10%), the differential pressure across each moisture separator, pre-filter, and HEPA filter bank shall be measured.

TA-4632 Airflow Distribution Test (AD)

With the system operating at design flow rate (±10%), the airflow distribution shall be measured downstream of each moisture separator, prefilter, and HEPA filter bank in accordance with Mandatory Appendix TA-IV.

TA-4633 Air-Aerosol Mixing Test (AA)

With the system operating at design flow rate (±10%), the air-aerosol mixing upstream of each HEPA filter bank shall be measured in accordance with Mandatory Appendix TA-V.

TA-4634 In-Place Leak Test (IP)

With the system operating at design flow rate (±10%), the challenge aerosol leak rate of each HEPA filter bank shall be measured in accordance with Mandatory Appendix TA-VI.

TA-4640 ACCEPTANCE CRITERIA

The following acceptance criteria are in addition to the requirements of TA-3600.

TA-4641 Airflow Distribution Test Acceptance Criteria

With the system operating within ±10% of design flow rate, the variation in velocity measurements across the HEPA filter banks shall be limited to ±20% of the average, when measured in accordance with Mandatory Appendix TA-IV. Airflow distribution across the moisture separator and prefilter banks shall be in accordance with the Owner's design specification.

TA-4642 Air-Aerosol Mixing Test Acceptance Criteria

With the system operating within ±10% of design flow rate, the variation in concentration of the air-aerosol mixture immediately upstream of the HEPA filter bank shall be limited to ±20% of the average when measured in accordance with Mandatory Appendix TA-V.

TABLE TA-4710
TYPE II AND TYPE III
ADSORBER BANK ACCEPTANCE TESTS

Test(s)	Designator	Measure	Observe
Visual inspection	VT		x
Differential pressure	DP	x	
Airflow distribution	AD	x	
Air-aerosol mixing	AA	x	
In-place leak [Note (1)]	IP	x	
Test canister flow rate	Qf	*	
Air heater performance	F	x	

NOTE:
(1) In-place leak tests are not required on systems used for 100% recirculation (e.g., reactor containment cleanup units), unless the atmospheric cleanup rate is time dependent.

TA-4700 TYPE II AND TYPE III ADSORBER BANK ACCEPTANCE TESTS

This section provides the field acceptance test requirements for installed type II and III adsorber banks.

TA-4710 ACCEPTANCE TEST REQUIREMENTS

Acceptance tests shall be conducted with the adsorbent media installed and in service under normal operating conditions for the system. The tests listed in Table TA-4710 shall be conducted and test results verified to be within the acceptance limits of the Owner's design specification, the applicable portions of Sections FD and FE of this Code, and as required in TA-3600 and TA-4740. These test results shall be documented in accordance with TA-6300 and shall be retained as reference values for comparison to periodic in-service test results.

TA-4720 VISUAL INSPECTION (VT)

A visual inspection of the Type II and Type III adsorber banks shall be conducted in accordance with TA-3510 and Mandatory Appendix TA-I, TA-I-1700.

Copyright ASME International
Provided by IHS under license with ASME
No reproduction or networking permitted without license from IHS
Not for Resale

TA-4730 COMPONENT FUNCTIONAL TESTS

TA-4731 Electric Heater Step-Controller Test (F)

Electric heater step controllers shall be tested by initiating a simulated demand signal to verify the heater circuit step controller is operational.

TA-4732 Electric Heater Coil-Resistance Test (F)

The electrical resistance shall be measured across each heater circuit in accordance with CA-5440.

TA-4733 Electric Heater Resistance-to-Ground Test (F)

The electrical resistance to ground shall be measured on each heater circuit.

TA-4740 SYSTEM FUNCTIONAL TESTS

TA-4741 Differential Pressure Test (DP)

With the system operating at design flow rate (±10%), the differential pressure across each adsorber bank shall be measured.

TA-4742 Airflow Distribution Test (AD)

With the system operating at design flow rate (±10%), the airflow distribution across each adsorber bank shall be measured in accordance with Mandatory Appendix TA-IV.

TA-4743 Air-Aerosol Mixing Test (AA)

With the system operating at design flow rate (±10%), the air-aerosol mixing immediately upstream of each adsorber bank shall be measured in accordance with Mandatory Appendix TA-V. This test is not required when it can be determined that the air-aerosol test conducted on a HEPA bank immediately upstream of the adsorber bank also provides equivalent challenge to the adsorber bank.

TA-4744 In-Place Leak Test (IP)

With the system operating at design flow rate (±10%), the challenge gas leak rate of each adsorber bank shall be measured in accordance with Mandatory Appendix TA-VII.

TA-4745 Test Canister Flow Rate Test (Qf)

When the system is equipped with test canisters used for obtaining adsorbent samples for laboratory analysis, the velocity through each test canister shall be measured (or calculated from flow measurements) with the system operating at design airflow rate. Alternatively, when access is limited and measurements cannot be performed, the design documentation shall be verified to assure that the installed canisters meet the performance requirements, (differential pressure/flow rate), of canisters used during shop testing of the test canister sampling system.

TA-4746 Electric Heater Performance Test (F)

With design airflow (±10%) through the heater bank, the electrical supply voltage, amperage, and phase balance of each heater circuit, and differential temperature and airflow across the heater bank shall be measured. Leaving air temperature shall be monitored so that temperature limits are not challenged. Following one hour of continuous operation, the heater shall be secured and a detailed visual inspection shall be conducted for signs of damage or degradation.

TA-4750 ACCEPTANCE CRITERIA

The following acceptance criteria are in addition to the requirements of TA-3600.

TA-4751 Airflow Distribution Test Acceptance Criteria

With the system operating within ±10% of design flow rate, the variation in velocity measurements across the face of the adsorber banks shall be limited to ±20% of the average, when measured in accordance with Mandatory Appendix TA-IV.

TA-4752 Air-Aerosol Mixing Test Acceptance Criteria

With the system operating within ±10% of design flow rate, the variation in the challenge gas or aerosol concentration readings immediately upstream of each

Copyright ASME International
Provided by IHS under license with ASME
No reproduction or networking permitted without license from IHS
Not for Resale

adsorber bank shall be limited to ±20% of the average when measured in accordance with Mandatory Appendix TA-V.

TA-4753 Test Canister Flow Rate Test Acceptance Criteria

The test canister velocity shall be within ±10% of the average adsorber design velocity as specified by the Owner's design specification.

TA-4754 Electric Heater Performance Test Acceptance Criteria

Operating currents, voltages and changes in temperature shall be within the limits of the Owner's design specification.

TA-4800 ADSORBENT ACCEPTANCE TESTS

This section verifies the laboratory acceptance test requirements for radioactive iodine penetration of the adsorbent used in adsorber systems.

TA-4810 ACCEPTANCE TEST REQUIREMENTS

Verify that laboratory acceptance tests have been performed on a representative sample of adsorbent per Article FF-5000. Test results shall be documented in accordance with TA-6300 and shall be retained as reference values for comparison to periodic in-service test results.

TA-4820 LABORATORY ANALYSIS OF ADSORBENT (LAB)

New adsorbent installed in the adsorber banks shall be certified in accordance with the Manufacturer's test data for radioiodine penetration (see Article FF-5000). Adsorbent stored more than 50% of Manufacturer's assigned shelf life or 5 years per FF-5000 shall have a laboratory test conducted in accordance with ASTM D 3803-89 prior to installation.

TA-4900 INTEGRATED SYSTEM TESTS

Each system shall be tested to verify the functional performance at design operating conditions. Integrated system tests shall be conducted to challenge all integrated control functions including interlocks and manual or automatic actuation circuits, (damper position changes, fan starts and stops, compressor and pump starts or stops, valve position changes, heater energization or de-energization). Actuations can be from a number of different sources including radiation sensors, temperature sensors, chlorine sensors, pressure sensors, manual controls and emergency safeguard signals. Sensor operation shall be verified in addition to control circuitry. Integrated testing shall also include an overall system leak test to verify that there are no unacceptable bypasses of the HEPA filter or adsorber banks. Integrated system testing shall verify that the intended design function of the system is achieved in accordance with the Owner's design specification. Test results shall be documented in accordance with TA-6300.

TA-4910 FAN-INTEGRATED SYSTEM TEST REQUIREMENTS (F)

Fans designed to respond automatically to a process or emergency actuation signal shall be tested. Sequencing of starts, stops and speed changes shall be conducted utilizing an actual or simulated actuation signal.

TA-4920 DAMPER-INTEGRATED SYSTEM TEST REQUIREMENTS (F)

Dampers designed to respond automatically to a process or emergency actuation signal shall be tested. Sequencing of damper position changes shall be conducted utilizing an actual or simulated actuation signal.

TA-4930 REFRIGERATION- AND CONDITIONING-INTEGRATED SYSTEM TEST REQUIREMENTS (F)

Refrigeration and conditioning equipment designed to respond automatically to a process or emergency actuation signal shall be tested. Sequencing of equipment operation (starts, stops, speed changes, valve operations or isolation, heater operation) shall be conducted using an actual or simulated actuation signal.

Copyright ASME International
Provided by IHS under license with ASME
No reproduction or networking permitted without license from IHS
Not for Resale

TA-4940 HEPA- AND ADSORBER BANK-INTEGRATED SYSTEM TEST REQUIREMENTS (F)

All potential HEPA filter and adsorber bank bypass flow paths, including housing bypass ducts and associated dampers, shall be challenged to verify that leak rates are within the Owner's design specification. Bypass flow paths may be challenged during the in-place leak test specified in TA-4634 and TA-4744, by ensuring that the challenge aerosol or gas injection and sample ports encompass all potential bypass flow paths (see Mandatory Appendix TA-V, TA-V-1100). If a potential bypass flow path within the system is not challenged during these in-place tests, a separate test shall be performed using Mandatory Appendix TA-VI or TA-VII to verify that the HEPA or adsorber banks are not being bypassed in excess of the limits specified in the Owner's design specification.

Copyright ASME International
Provided by IHS under license with ASME
No reproduction or networking permitted without license from IHS
Not for Resale

ARTICLE TA-5000
CORRECTIVE ACTION REQUIREMENTS

Corrective action is required when test results do not meet the acceptance criteria specified in the applicable section or in the Owner's design specifications. For equipment that is replaced, modified, repaired, or has undergone maintenance, such that reference values may change, a new set of reference values shall be obtained in accordance with the requirements of TA-3300. Additional guidance for corrective actions is included in Nonmandatory Appendix TA-B.

Copyright ASME International
Provided by IHS under license with ASME
No reproduction or networking permitted without license from IHS
Not for Resale

ARTICLE TA-6000
QUALITY ASSURANCE

TA-6100 GENERAL

Field testing of nuclear air treatment, heating, ventilating, and air conditioning systems shall be conducted in accordance with the quality assurance requirements of Article AA-8000 and ASME NQA-1.

TA-6200 PERSONNEL

Tests shall be conducted by personnel who have demonstrated competence to perform the specific tests, as evidenced by documented experience and training. Personnel shall be certified in accordance with ASME NQA-1 or ANS 3.1, and in accordance with the Owner's requirements.

TA-6300 DOCUMENTATION

TA-6310 PROCEDURES

Written acceptance test procedures shall document the field acceptance testing performed and test results obtained as specified in Article TA-4000. These records shall be maintained for the life of the facility.

TA-6320 REPORTS

A written report shall be provided to document the acceptance testing performed in accordance with Article TA-4000. The report shall contain the following as a minimum:

(a) the system name, test/inspection procedure(s) used, date of test results, and the test performer's signature

(b) identification of instruments, equipment, tools, and documents to the extent that they or their equivalents can be identified for future examinations

(c) observations and dimensional checks specified by the respective test data and reports developed during inspection and testing

(d) conclusions and recommendations by visual examination and testing personnel

(e) reference to previous reports if this report is for reinspection and testing

Copyright ASME International
Provided by IHS under license with ASME
No reproduction or networking permitted without license from IHS
Not for Resale

MANDATORY APPENDIX TA-I
VISUAL INSPECTION ITEMS

ARTICLE TA-I-1000
GENERAL

A specific inspection checklist for each component in the system shall be included in the acceptance test procedures. This Appendix lists typical items for each component that need to be inspected visually in Article TA-4000 (acceptance tests). As a minimum, the lists of items indicated below shall be checked for compliance with the Owner's specifications. The inspection shall be conducted in accordance with TA-3510. The acceptance criteria for these inspections shall be in accordance with TA-3600 and TA-3610.

TA-I-1100 FAN INSPECTION ITEMS

(*a*) housing and duct interface
(*b*) fan belt and shaft guards
(*c*) interferences with moving parts
(*d*) fan shaft seal
(*e*) belt adjustment and condition
(*f*) lubricant levels
(*g*) supports and attachments
(*h*) bolting and fasteners
(*i*) instrumentation
(*j*) electrical connections
(*k*) control system components
(*l*) pneumatic connections
(*m*) as-built configuration in accordance with design drawings
(*n*) fan nameplate
(*o*) provisions for access for performing tests and maintenance

TA-I-1200 DAMPER INSPECTION ITEMS

(*a*) housing and duct interface
(*b*) actuator linkage, motor, and controller
(*c*) interferences with moving parts
(*d*) damper shaft seal
(*e*) blade edge seals and damper seat
(*f*) limit switches
(*g*) supports and attachments
(*h*) bolting and fasteners
(*i*) instrumentation
(*j*) electrical connections
(*k*) pneumatic connections
(*l*) as-built configuration in accordance with design drawings
(*m*) damper nameplate
(*n*) provisions for access for performing tests and maintenance

TA-I-1300 DUCT, HOUSING, AND MOUNTING FRAME INSPECTION ITEMS

(*a*) housing and duct connections (no caulking)
(*b*) provision for opening access doors from both inside and outside
(*c*) access door seals and gaskets
(*d*) access door latches
(*e*) housing internal access ladders and platforms
(*f*) sample and injection ports, location and caps
(*g*) supports and attachments
(*h*) bolting and fasteners

Copyright ASME International
Provided by IHS under license with ASME
No reproduction or networking permitted without license from IHS
Not for Resale

(i) instrumentation, connections
(j) electrical connections
(k) housing/duct penetration seals
(l) loop seals (water level) and drain connections
(m) lighting conduits and socket housing seals (flush mounted)
(n) HEPA/adsorber mounting frame continuous seal welds
(o) mounting frame penetrations seal welded
(p) mounting frame seating surface (weld splatter, flatness, and scratches)
(q) sample canister installation
(r) mounting frame clamping devices
(s) as-built configuration in accordance with design drawings
(t) provisions for access for performing tests and maintenance
(u) lighting for test and maintenance available

TA-I-1400 REFRIGERATION EQUIPMENT INSPECTION ITEMS

(a) housing or duct interface with refrigeration equipment
(b) fan, pump, compressor belt, and coupling guards
(c) interferences with moving parts
(d) belt adjustment and condition
(e) fluid leaks
(f) lubricant levels
(g) supports and attachments
(h) bolting and fasteners
(i) instrumentation
(j) electrical connections
(k) control system components
(l) pneumatic connections and tubing (no crimping)
(m) as-built configuration in accordance with design drawings
(n) fan, pump, and compressor nameplate
(o) provisions for access for performing tests and maintenance

TA-I-1500 CONDITIONING EQUIPMENT INSPECTION ITEMS

(a) housing or duct interface with conditioning equipment
(b) belt and coupling guards
(c) interferences with moving parts
(d) belt tightness
(e) fluid leaks
(f) lubricant levels
(g) supports and attachments
(h) bolting and fasteners
(i) instrumentation
(j) electrical connections
(k) control system components
(l) pneumatic connections and tubing (no crimping)
(m) drains and spray nozzles not plugged
(n) as-built configuration in accordance with design drawings
(o) fan, pump, and compressor nameplate
(p) provisions for access for performing tests and maintenance

TA-I-1600 MOISTURE SEPARATOR BANK, PREFILTER BANK, HEPA FILTER BANK INSPECTION ITEMS

(a) moisture separator media, frame, clamps, and gaskets
(b) moisture separator water collection system and drains
(c) prefilter media, frame, clamps, and gaskets
(d) HEPA filter media, frame, clamps, and gaskets
(e) sealant or caulking (none allowed)
(f) moisture separator, prefilter, and HEPA orientation (vertical)
(g) bolting and fasteners
(h) as-built configuration in accordance with design drawings
(i) HEPA filter nameplate
(j) provisions for access for performing tests and maintenance

TA-I-1700 TYPE II AND TYPE III ADSORBER BANK INSPECTION ITEMS

(a) Type II media, frame, screen, clamps, and gaskets
(b) sealant or caulking (none allowed)
(c) Type III media, screens, and frame
(d) test canisters
(e) bulk loading equipment
(f) fire protection system piping, nozzles, instrumentation
(g) bolting and fasteners
(h) as-built configuration in accordance with design drawings
(i) adsorber nameplate
(j) provisions for access for performing tests and maintenance

Copyright ASME International
Provided by IHS under license with ASME
No reproduction or networking permitted without license from IHS
Not for Resale

MANDATORY APPENDIX TA-II
STRUCTURAL CAPABILITY TEST PROCEDURAL GUIDELINES

ARTICLE TA-II-1000
GENERAL

These guidelines are used to prepare specific test procedures for testing the structural capability of ducts and housings.

TA-II-1100 SUMMARY OF METHOD

Ducts and housings that form the pressure boundary of the system shall be pressure tested, with air, to the structural capability pressure to verify that there is no breach of integrity or unacceptable distortion. Fans, dampers, and other components that form parts of the pressure boundary shall be installed and tested with the ducts and housings to verify the interface connection integrity.

NOTE: These guidelines are written as if the operating pressure were positive, but it would be identical for negative pressure systems with appropriate signs used in data collection and calculations.

Copyright ASME International
Provided by IHS under license with ASME
No reproduction or networking permitted without license from IHS
Not for Resale

ARTICLE TA-II-2000
PREREQUISITES

Construction, modifications, or repairs affecting the test boundary shall be complete and inlet and discharge openings of the duct or housing sealed before the test is started. Electrical, piping, and instrument connections shall be complete and all permanent seals installed before the test is started.

Copyright ASME International
Provided by IHS under license with ASME
No reproduction or networking permitted without license from IHS
Not for Resale

ARTICLE TA-II-3000
TEST EQUIPMENT

Test equipment includes the following:

(a) pressurization source

(b) covers to seal test boundaries

(c) pressure-indicating device accurate to ±0.1 in. wg [0.025 kPa (gage)]

Copyright ASME International
Provided by IHS under license with ASME
No reproduction or networking permitted without license from IHS
Not for Resale

ARTICLE TA-II-4000
PROCEDURAL GUIDELINES

Procedural guidelines are as follows:

(a) Connect the pressurization source to the duct or housing.

(b) Install instrumentation to indicate the pressure inside the duct or housing being tested.

(c) Start the pressurization source and operate until the structural capability pressure is achieved. Maintain pressure for the duration of the inspection.

(d) Inspect the test boundary for breach of integrity or distortion.

(e) Release pressure and inspect for permanent distortion.

Copyright ASME International
Provided by IHS under license with ASME
No reproduction or networking permitted without license from IHS
Not for Resale

ARTICLE TA-II-5000
ACCEPTANCE CRITERIA

All distortion shall be measured and compared to the acceptance limits of the Owner's design specification.

Copyright ASME International
Provided by IHS under license with ASME
No reproduction or networking permitted without license from IHS
Not for Resale

MANDATORY APPENDIX TA-III
DUCT AND HOUSING LEAK TEST PROCEDURAL GUIDELINES

ARTICLE TA-III-1000 GENERAL

These guidelines are used to prepare specific procedures for testing the leak-tightness of the ducts and housings including installed fan housings, damper housings, and fan and damper shaft seals.

TA-III-1100 SUMMARY OF METHOD

Ducts and housings that form the pressure boundary of the system shall be leak tested, with air, using one of the methods listed in this procedure. Either method may be used and will produce a similar test result. The constant pressure method is useful for testing small volumes and is conducted at the maximum operating pressure for the system. The pressure decay method is useful in testing large volumes and is conducted by pressurizing to $1\frac{1}{4}$ times the maximum operating pressure, then allowing the pressure to decay for a fixed period of time, or until the pressure decreases to 80% of the maximum operating pressure, whichever occurs first. Fans, dampers, and other components that are part of the pressure boundary shall be installed and tested with the pressure boundary to verify interface connection leak tightness. If the measured leak rate is in excess of the acceptance criteria, the leaks shall be located by one of the methods listed in this procedure. After leaks are repaired, the duct and housing shall be retested to verify leak-tightness.

NOTE: This test procedure is written as if the operating pressure were positive, but it would be identical for negative pressure systems with appropriate change in signs used in the data collection and calculations.

Copyright ASME International
Provided by IHS under license with ASME
No reproduction or networking permitted without license from IHS
Not for Resale

ARTICLE TA-III-2000
PREREQUISITES

Construction, modifications, and repairs affecting the test boundary shall be complete and the inlet and discharge openings of the duct or housing sealed before the test is started. All electrical, piping, and instrument connections shall be complete and all permanent seals shall be installed before the test is started. For pressure decay testing, the volume of the pressure test boundary must be calculated.

Copyright ASME International
Provided by IHS under license with ASME
No reproduction or networking permitted without license from IHS
Not for Resale

ARTICLE TA-III-3000
TEST EQUIPMENT

Test equipment includes the following:

(a) pressurization source

(b) covers to seal test boundaries

(c) clock or timer accurate to ±1.0 sec

(d) pressure-indicating device accurate to ±0.1 in. wg [0.025 kPa (gage)]

(e) flowmeter or totalizing gas volume meter accurate to ±5% (constant-pressure method)

(f) temperature-indicating device accurate to ±0.5°F (0.25°C)

(g) bubble solution for detecting air leaks (bubble method)

(h) optional portable electronic sound detection equipment (audible leak method)

(i) barometer

Copyright ASME International
Provided by IHS under license with ASME
No reproduction or networking permitted without license from IHS
Not for Resale

ARTICLE TA-III-4000
PROCEDURAL GUIDELINES

TA-III-4100 CONSTANT PRESSURE TEST

(a) Connect the pressurization source to the duct or housing.

(b) Connect the flowmeter or totalizing gas volume meter between the pressurization source and the housing (downstream of the throttling valve, if used).

(c) Install temperature and pressure indicating devices so that they will indicate representative temperature and pressure inside the duct or housing being tested.

(d) Seal test boundaries and close access doors in the normal manner. Do not use temporary sealants, duct tape, or similar temporary materials except for sealing the temporary blank-off panels.

(e) Start the pressurization source and operate it until the maximum operating pressure is achieved. Maintain pressure constant with the flow control device until temperature remains constant within ±0.5°F (0.25°C) for a minimum of 10 min. Record the initial stabilized pressure, temperature, and barometric pressure.

(f) Measure the flow rate of the air being added to or removed from the duct or housing while maintaining the maximum operating pressure within ±0.1 in. wg [0.025 kPa (gage)]. When using the flowmeter, record flow readings once a minute for a 5 min continuous period and average the readings to calculate the measured leak rate. When using a totalizing gas volume meter, measure the total volume of air for a 10 min continuous period and divide the measured volume by time (10 min) to calculate the measured leak rate. Record final pressure, temperature and barometric pressure.

(g) Convert the final calculated leak rate to standard cfm (m^3/s) in accordance with the method illustrated in *Industrial Ventilation* (see Article TA-2000).

TA-III-4200 PRESSURE DECAY TEST

(a) Connect the pressurization source (with a leak-tight shutoff valve) to the duct or housing.

(b) Install the temperature- and pressure-indicating devices where they will indicate representative temperature and pressure inside the duct or housing being tested.

(c) Seal test boundaries and close access doors in the normal manner. Do not use temporary sealants, duct tape, or similar temporary materials except for sealing the temporary blank-off panels.

(d) Start the pressurization source and operate until the pressure is $1\frac{1}{4}$ times the maximum operating pressure (but not to exceed the structural capability pressure). Maintain this pressure constant with a flow control device until temperature remains constant within ±0.5°F (0.25°C) for a minimum of 10 min. Close shutoff valve.

NOTE: If the structural capability pressure for the duct or housing is less than $1\frac{1}{4}$ times the maximum operating pressure, the final test pressure shall be calculated as follows to achieve an average test pressure equal to the maximum operating pressure:

$$P_f = 0.8(OP_{\text{max.}}) + (1.25(OP_{\text{max.}}) - SCP)$$

where

P_f = final test pressure
$OP_{\text{max.}}$ = maximum operating pressure
SCP = structural capability pressure

(e) Record the initial time, pressure, temperature, and barometric pressure.

(f) Record pressure readings once a minute until pressure decays to 80% of the maximum operating pressure, or for a minimum of 15 min (see Note above).

(g) Record final time, pressure, temperature, and barometric pressure.

(h) Calculate leak rate from the following equation in Customary units:

Copyright ASME International
Provided by IHS under license with ASME
No reproduction or networking permitted without license from IHS
Not for Resale

$$Q_{ave} = \left(\frac{P_i}{T_i} - \frac{P_f}{T_f}\right) * \frac{V}{R*\Delta t*0.075}$$

SI units:

$$Q_{ave} = (1.39 * 10^{-5}) * \left(\frac{P_i}{T_i} - \frac{P_f}{T_f}\right) * \frac{V}{R*\Delta t}$$

where

Q_{ave} = average leak rate, scfm (sm^3/s). [air density = 0.075 lb/ft^3 (1.2 kg/m^3)]
V = volume within test boundary, ft^3 (m^3)
P_i = initial pressure within test boundary, lb/ft^2 abs [Pa(absolute)]
P_f = final pressure within test boundary, lb/ft^2 abs [Pa(absolute)]
T_i = absolute temperature at start of test, °R (°K)
T_f = absolute temperature at end of test, °R (°K)
Δt = $t_i - t_f$ time difference (minutes)
t_i = time at start of test (minutes)
t_f = time at end of test (minutes)
R = gas constant for air; 53.35 ft-lb, (0.286 kJ, lb-°R, kg-°K)

TA-III-4300 ACCEPTANCE CRITERIA

If the calculated leak rate exceeds the Owner's acceptance criteria, locate leaks in accordance with one of the techniques outlined in TA-III-4400 or TA-III-4500.

TA-III-4400 BUBBLE LEAK LOCATION METHOD

(a) Pressurize the test boundary to the maximum operating pressure for the system.

(b) With the test boundary under continuous pressure, apply bubble solution to areas to be tested. Identify places where bubbles are found and perform corrective actions.

(c) Following corrective actions, retest in accordance with TA-III-4100 or TA-III-4200.

TA-III-4500 AUDIBLE LEAK LOCATION METHOD

(a) Pressurize the test boundary to the maximum operating pressure for the system.

(b) With the test boundary continuously pressurized, locate audible leaks (electronic sound detection equipment optional) and perform corrective actions.

(c) Following corrective action, retest in accordance with TA-III-4100 or TA-III-4200.

Copyright ASME International
Provided by IHS under license with ASME
No reproduction or networking permitted without license from IHS
Not for Resale

MANDATORY APPENDIX TA-IV
AIRFLOW DISTRIBUTION TEST PROCEDURAL GUIDELINES

ARTICLE TA-IV-1000
GENERAL

These guidelines are used to prepare specific test procedures for measuring the airflow distribution across the face of moisture separator, prefilter, HEPA filter, and adsorber banks. Uniform air velocity distribution ensures maximum air treatment efficiency and uniform loading of air treatment components.

TA-IV-1100 SUMMARY OF METHOD

The system is operated at design flow rate. Airflow velocity readings are measured downstream of each moisture separator, prefilter, and HEPA filter in the bank. For adsorbers, readings shall be taken in line with the flow slots. Each reading is compared to the average for the bank.

Copyright ASME International
Provided by IHS under license with ASME
No reproduction or networking permitted without license from IHS
Not for Resale

ARTICLE TA-IV-2000
PREREQUISITES

System operating within ±10% design flow rate.

Copyright ASME International
Provided by IHS under license with ASME
No reproduction or networking permitted without license from IHS
Not for Resale

ARTICLE TA-IV-3000
TEST EQUIPMENT

Rotating vane, heated wire or heated thermocouple anemometer, pitot tube, or other suitable air velocity-measuring device as appropriate for the anticipated velocities.

Copyright ASME International
Provided by IHS under license with ASME
No reproduction or networking permitted without license from IHS
Not for Resale

ARTICLE TA-IV-4000
PROCEDURAL GUIDELINES

(a) For each moisture separator, prefilter, and HEPA filter, measure the air velocity at the approximate centers of equal areas with at least one measurement per each moisture separator, prefilter, and HEPA filter, and a minimum of nine measurements per bank. Adsorber velocity measurements shall be made in the approximate center of the flow slots. For flow slots greater than 24 in. long (60 cm), measurements shall be nominally every 12 in. (30 cm) along the length of the slot.

(b) Calculate the average velocity (V_{ave}) using the following formula:

$$V_{ave} = \frac{\Sigma_1^n V_i}{n}$$

where

Σ_1^n = sum of readings from 1 to n
V_i = individual velocity readings
n = number of readings

(c) Identify the highest and lowest velocity readings and calculate the percentage they vary from the average calculated above.

Copyright ASME International
Provided by IHS under license with ASME
No reproduction or networking permitted without license from IHS
Not for Resale

MANDATORY APPENDIX TA-V
AIR-AEROSOL MIXING TEST PROCEDURAL GUIDELINES

ARTICLE TA-V-1000 GENERAL

These are used to prepare specific test procedures to ensure that the challenge aerosol or gas injection ports, used for the in-place leak tests of Mandatory Appendices TA-VI and TA-VII, provide a uniform challenge across the entire face of the HEPA filter or adsorber banks. Uniform air-aerosol mixing ensures that all areas of the bank are challenged during these in-place tests. Once an injection port is qualified by this procedure, it shall be used in all subsequent in-place leak tests as outlined in the acceptance tests of TA-4600 and TA-4700.

TA-V-1100 SYSTEM TEST

Injection and sample port location shall be located so that the entire system, including housing bypass ducts and associated dampers, is challenged for inadvertent bypass flow paths around the HEPA filter or adsorber banks. If this cannot be accomplished, an integrated system test shall be included in addition to the bank tests outlined in Mandatory Appendices TA-VI and TA-VII, and TA-4940.

TA-V-1200 SUMMARY OF METHOD

The system is operated at design flow rate. Challenge aerosol or gas is injected through an injection port upstream of the bank. Challenge aerosol or gas concentration readings are obtained at equal cross-sectional areas in front of the HEPA filter or adsorber bank. Each reading is then compared to the average for the bank. DOP aerosol is the preferred challenge agent for this test. However, use of a challenge gas may be useful in some cases.

TA-V-1300 INJECTION PORT SELECTION CRITERIA

Injection ports should be located upstream of a flow disturbance to maximize mixing. The challenge gas will pass through the HEPA bank and challenge the adsorber bank. For systems with two or more HEPA filter banks in series, or two or more adsorber banks in series, separate injection ports must be qualified for each bank. Use of injection manifolds may be necessary when there is insufficient room between banks to provide adequate mixing.

Copyright ASME International
Provided by IHS under license with ASME
No reproduction or networking permitted without license from IHS
Not for Resale

ARTICLE TA-V-2000
PREREQUISITES

The system is operating within ±10% of design flow rate. The airflow distribution has been verified in accordance with Mandatory Appendix TA-IV.

--`,,```,,,,````-`-`,,`,,`,`,,`---

Copyright ASME International
Provided by IHS under license with ASME
No reproduction or networking permitted without license from IHS

Not for Resale

ARTICLE TA-V-3000
TEST EQUIPMENT

Test equipment includes the following:
(a) challenge aerosol or gas generator
(b) challenge aerosol or gas-measuring instrument

Copyright ASME International
Provided by IHS under license with ASME
No reproduction or networking permitted without license from IHS
Not for Resale

ARTICLE TA-V-4000
PROCEDURAL GUIDELINES

Procedural guidelines are as follows:

(a) Connect challenge aerosol or gas generator to the injection port to be tested.

(b) Place the challenge aerosol or gas-measuring instrument sample probe upstream of the bank to be tested with adequate hose length to reach all areas of the bank.

(c) Start the challenge aerosol or gas injection and establish a constant injection rate.

(d) Take a concentration reading upstream of and at the approximate centers of equal areas, with at least one reading per HEPA filter and a minimum of nine readings per HEPA bank. For Type II and Type III adsorbers, readings shall be taken upstream of and in the approximate center of each flow slot. For flow slots greater than 24 in. (60 cm) in length, a reading shall be taken nominally every 12 in. (30 cm) along the length of the slot.

(e) Calculate the average concentration (C_{ave}) readings using the following formula;

$$C_{ave} = \frac{\Sigma_1^n C_i}{n}$$

where

Σ_1^n = sum of readings from 1 to n
C_i = individual readings
n = number of readings

(f) Identify the highest and lowest concentration readings and calculate the percentage it varies from the average above.

Copyright ASME International
Provided by IHS under license with ASME
No reproduction or networking permitted without license from IHS
Not for Resale

MANDATORY APPENDIX TA-VI
HEPA FILTER BANK IN-PLACE LEAK TEST PROCEDURAL GUIDELINES

ARTICLE TA-VI-1000
GENERAL

These guidelines are used to prepare specific test procedures for leak testing HEPA banks.

TA-VI-1100 SUMMARY OF METHOD

The system is operated at design flow rate. Challenge aerosol is injected upstream of each bank through injection ports qualified in Mandatory Appendix TA-V. The concentration of the challenge aerosol is measured upstream and downstream of the HEPA bank. The ratio of the downstream and upstream concentrations represents the HEPA filter bank leak rate.

Copyright ASME International
Provided by IHS under license with ASME
No reproduction or networking permitted without license from IHS
Not for Resale

ARTICLE TA-VI-2000
PREREQUISITES

Airflow distribution shall be verified in accordance with Appendix TA-IV. The injection port shall be qualified to provide uniform air-aerosol mixing in accordance with Mandatory Appendix TA-V.

Copyright ASME International
Provided by IHS under license with ASME
No reproduction or networking permitted without license from IHS
Not for Resale

ARTICLE TA-VI-3000
TEST EQUIPMENT

Test equipment includes the following:
(a) challenge aerosol generator
(b) challenge aerosol-measuring instrument
(c) flow-measuring device

Copyright ASME International
Provided by IHS under license with ASME
No reproduction or networking permitted without license from IHS
Not for Resale

ARTICLE TA-VI-4000
PROCEDURAL GUIDELINES

Procedural guidelines are as follows:

(a) Connect challenge aerosol generator to the qualified injection port.

(b) Place the challenge aerosol-measuring instrument sample probes upstream and downstream of the bank to be tested. The sample tubing shall be of equal bore and approximately equal lengths and as short as possible to minimize the measuring instrument response time. The upstream sample probe shall be located in approximately the center of the bank. The downstream sample probe shall be located in a downstream sample manifold or downstream of a mixing source such as a turbulent fan discharge.

(c) Start the system and verify stable flow rate within ±10% of design flow rate.

(d) Measure the upstream and downstream aerosol background concentration. The pre-injection background levels shall be stable to ensure correct instrument response and shall not interfere with the detector's ability to detect leaks in excess of the maximum allowed by the acceptance criteria.

(e) Start the challenge aerosol injection.

(f) Record the upstream and downstream concentrations. Repeat until at least three of the readings are stable.

(g) Stop the injection.

(h) Using the final set of readings meeting the stability and tolerance criteria, calculate the bank leak rate using the formula below:

$$L = (100)\frac{C_d}{C_u}$$

where

L = percentage leak
C_d = downstream concentration
C_u = upstream concentration

Copyright ASME International
Provided by IHS under license with ASME
No reproduction or networking permitted without license from IHS
Not for Resale

MANDATORY APPENDIX TA-VII
ADSORBER BANK IN-PLACE LEAK TEST PROCEDURAL GUIDELINES

ARTICLE TA-VII-1000
GENERAL

These guidelines are used to prepare specific procedures for leak-testing adsorber banks.

TA-VII-1100 SUMMARY OF METHOD

The system is operated at design flow rate. Challenge gas is injected upstream of each bank through the injection port qualified in Mandatory Appendix TA-V. The concentration of challenge gas is measured upstream and downstream of the bank. The ratio of the downstream and upstream concentrations represents the bank leak rate.

Copyright ASME International
Provided by IHS under license with ASME
No reproduction or networking permitted without license from IHS
Not for Resale

ARTICLE TA-VII-2000
PREREQUISITES

Airflow distribution shall be verified in accordance with Mandatory Appendix TA-IV. The injection port shall be qualified to provide uniform air-aerosol mixing in accordance with Mandatory Appendix TA-V.

Copyright ASME International
Provided by IHS under license with ASME
No reproduction or networking permitted without license from IHS
Not for Resale

ARTICLE TA-VII-3000
TEST EQUIPMENT

Test equipment includes the following:
(a) challenge gas generator
(b) challenge gas-measuring instrument
(c) flow-measuring device

Copyright ASME International
Provided by IHS under license with ASME
No reproduction or networking permitted without license from IHS
Not for Resale

ARTICLE TA-VII-4000
PROCEDURAL GUIDELINES

Procedural guidelines are as follows:

(a) Connect challenge gas generator to the qualified injection port.

(b) Place the challenge gas-measuring instrument sample probes upstream and downstream of the bank to be tested. The sample tubing shall be of equal bore and approximately equal lengths and as short as possible to minimize the measuring instrument response time. The upstream sample probe shall be located in approximately the center of the bank. The downstream sample probe shall be located in a downstream sample manifold or downstream of a mixing source such as a turbulent fan discharge.

(c) Start the system and verify stable flow rate and within ±10% of design flow rate.

(d) Measure the upstream and downstream challenge gas background concentration. The pre-injection background levels shall be stable to ensure correct instrument response and shall not interfere with the detector's ability to detect challenge gas leaks less than the maximum allowed by the acceptance criteria.

(e) Start the challenge gas injection.

(f) Record the upstream and downstream concentrations, as rapidly as instrument response time allows, until sufficient data have been recorded to allow calculation of adsorber bank leak rate. Care must be taken to obtain sufficient readings quickly after injection.

(g) Terminate challenge gas injection.

(h) Using the upstream and downstream concentration data, calculate the adsorber bank leak rate using the formula below.

$$L = (100)\frac{C_d}{C_u}$$

where

L = percentage leak
C_d = downstream concentration
C_u = upstream concentration

Copyright ASME International
Provided by IHS under license with ASME
No reproduction or networking permitted without license from IHS
Not for Resale

MANDATORY APPENDIX TA-VIII
REFRIGERANT PIPING AND COIL SYSTEM LEAK TEST PROCEDURAL GUIDELINES

ARTICLE TA-VIII-1000
GENERAL

These guidelines are used to prepare specific procedures for testing the leak-tightness of refrigerant system piping and coils. The system will be pressurized with a test mixture to identify any leaks. After all identified leaks are repaired a vacuum will be drawn on the system to prove that there are no remaining leaks and to remove any contaminants from the system.

TA-VIII-1100 SUMMARY OF METHOD

The pressure method consists of admitting a test gas, which is usually a mixture of refrigerant and inert gas, into the pressure vessel, coils, and piping system, and checking for leaks. The vacuum method consists of drawing a vacuum in the closed system, and watching for a rise in pressure on a pressure indicator.

Copyright ASME International
Provided by IHS under license with ASME
No reproduction or networking permitted without license from IHS
Not for Resale

ARTICLE TA-VIII-2000
PREREQUISITES

(a) All flare, flange, solder, braze, weld, or thread fittings mechanically tight.

(b) All seals, packing glands, and service valve packing nuts mechanically tight.

(c) All service, purge, and charging valves closed to the atmosphere.

(d) Wire brush and wipe flux and oxides from all heated joints.

Copyright ASME International
Provided by IHS under license with ASME
No reproduction or networking permitted without license from IHS
Not for Resale

ARTICLE TA-VIII-3000
TEST EQUIPMENT

Test equipment includes the following:

(a) refrigerant gas

(b) inert gas (nitrogen or carbon dioxide)

(c) pressure-indicating device

(d) pressure-regulating device with relief valve

(e) electronic refrigerant leak detector

(f) leak detection bubble solution

(g) vacuum pump

(h) vacuum-indicating device (thermocouple vacuum indicator or other suitable vacuum-indicating device)

Copyright ASME International
Provided by IHS under license with ASME
No reproduction or networking permitted without license from IHS
Not for Resale

ARTICLE TA-VIII-4000
PROCEDURAL GUIDELINES

TA-VIII-4100 LEAK TEST PROCEDURAL GUIDELINES

(a) Open all interconnecting manual system valves, solenoid and expansion valves to ensure access to the complete system volume.

CAUTION: Do not exceed the safe test pressure limits established by the unit manufacturer.

NOTE: It is advantageous and less costly to use an inert gas (nitrogen or carbon dioxide) to back up the refrigerant vapor pressure. Only about 5% to 10% of the total mixture needs be refrigerant vapor for this method to work.

(b) Pressurize the entire system to the Manufacturer's recommended test pressure with the test mixture.

NOTE: Allow time for the refrigerant and inert gas to mix before checking for leaks.

(c) Leak test the entire system, including factory joints, seals, and insulated lines with an electronic leak detector. Usually a 1 in. (2.5 cm)/sec movement of the detector probe is sufficient to pick up leaks. Soap solution may also be used to locate leaks.

(d) Mark or identify any leaks located.

CAUTION: Use appropriate reclaim equipment to prevent release of refrigerant gas to the atmosphere.

(e) Leak-testing is complete when all leaks have been repaired and the system has been repressurized and retested to verify that there are no leaks.

TA-VIII-4200 EVACUATION AND DEHYDRATION PROCEDURE

Evacuate and dehydrate after leak-testing per TA-VIII-4100. Proper evacuation and dehydration prove system tightness, expel noncondensables, and ensure a dry system before charging with refrigerant.

TA-VIII-4210 DEEP VACUUM METHOD

(a) Vent all system pressure.

CAUTION: Use appropriate reclaim equipment to prevent release of refrigerant gas to the atmosphere.

(b) Connect a temporary connection between the system high and low pressure sides. Connect the vacuum pump, vacuum indicator, and refrigerant cylinder to the system.

(c) Open the vacuum pump suction and start the evacuation.

(d) When the system reaches less than 500 μm (Hg) absolute, it is isolated from the vacuum pump.

(e) When the system holds 500 μm (Hg) absolute for at least 15 min, with the vacuum source isolated, the system is free of moisture and leaks and the vacuum should be released by charging with refrigerant.

Copyright ASME International
Provided by IHS under license with ASME
No reproduction or networking permitted without license from IHS
Not for Resale

NONMANDATORY APPENDIX TA-A
MOUNTING FRAME PRESSURE LEAK TEST PROCEDURAL GUIDELINES

ARTICLE TA-A-1000
GENERAL

These optional procedural guidelines are used to prepare specific test procedures to identify leaks through seal welds of the HEPA filter or adsorber mounting frames. The presence of these leaks may be evident when conducting the in-place leak tests on the HEPA filter and adsorber banks. A good visual verification per Nonmandatory Appendix TA-I, TA-I-1600 and TA-I-1700, is usually adequate. This procedure is provided for use when the frame leaks need to be located.

TA-A-1100 SUMMARY OF METHOD

Temporary blanks, with gaskets, are installed in place of the HEPA filters or adsorbers on the mounting frame in the system. The pressure boundary is then secured by blanking off upstream of the mounting frame in the housing or associated ducts. This modified pressure boundary is then pressurized using the techniques outlined in Nonmandatory Appendix TA-III and any leaks in the mounting frame welded interface is detected using the techniques in Mandatory Appendix TA-III, steps TA-III-4400 or TA-III-4500.

Copyright ASME International
Provided by IHS under license with ASME
No reproduction or networking permitted without license from IHS
Not for Resale

ARTICLE TA-A-2000
PREREQUISITES

Construction, modifications, and repairs affecting the test boundary shall be completed and temporary blanks (with gaskets) installed on the gasket side of the mounting frame. The opening of the duct or housing upstream of the mounting frame shall be blanked off to form a modified pressure boundary.

Copyright ASME International
Provided by IHS under license with ASME
No reproduction or networking permitted without license from IHS
Not for Resale

ARTICLE TA-A-3000
TEST EQUIPMENT

Test equipment includes the following:

(a) pressurization source

(b) covers to seal test boundaries

(c) pressure-indicating device accurate to ±0.1 in. wg [0.025 kPa (gage)]

Copyright ASME International
Provided by IHS under license with ASME
No reproduction or networking permitted without license from IHS
Not for Resale

ARTICLE TA-A-4000
PROCEDURAL GUIDELINES

Procedural guidelines are as follows:

(a) Connect the pressurization source to the duct or housing pressure boundary.

(b) Install pressure-indicating device so that it will indicate the pressure inside the duct or housing being tested.

(c) Close access doors.

(d) Start the fan and operate until the pressure is greater than or equal to the maximum operating differential pressure for the filter bank (not to exceed the structural capability pressure for the duct and housing assembly). Maintain pressure for the duration of the inspection.

(e) Inspect the mounting frame welds and attachments for leaks using the methods outlined in Mandatory Appendix TA-III, steps TA-III-4400 or TA-III-4500.

Copyright ASME International
Provided by IHS under license with ASME
No reproduction or networking permitted without license from IHS
Not for Resale

NONMANDATORY APPENDIX TA-B
CORRECTIVE ACTION GUIDANCE

ARTICLE TA-B-1000

Corrective action may consist of replacement, repair, modification, maintenance, or analysis to demonstrate that the equipment will fulfill its design function. A revised set of reference values, as described in TA-3300, should be established after the corrective action has been taken.

Results of a failed test should not be resolved simply by a successful repetition of the test. A successful repetition of the test should be preceded by corrective action.

If the cause of the test failure cannot be determined by inspection or analysis, corrective action may consist of re-calibration of test instruments and subsequent re-testing. If it is determined that the test failure is due to an equipment malfunction, instead of difficulties with the test equipment, or test procedure, the equipment should be declared unavailable for service until the specific cause has been determined and the condition corrected.

Copyright ASME International
Provided by IHS under license with ASME
No reproduction or networking permitted without license from IHS
Not for Resale

NONMANDATORY APPENDIX TA-C
CHALLENGE GAS
SUBSTITUTE SELECTION CRITERIA

ARTICLE TA-C-1000

Alternative test agents (challenge gas) may be used to perform in-place leak testing of adsorbers, as required in Mandatory Appendix TA-VII, when their selection is based on meeting the following characteristics:

(a) The test agent gives the same in-place leak test results as one of the following: R-11, R-12, R-112 or R-112a.

(b) The test agent has similar retention times on activated carbons, at the same concentration levels, as one of the following: R-11, R-12, R-112, or R-112a.

(c) The test agent has similar lower-detection limit sensitivity and precision in the concentration range of use as one of the following: R-11, R-12, R-112, or R-112a.

(d) The test agent exhibits chemical and radiological stability under the test conditions.

(e) The test agent causes no degradation of the carbon and its impregnant(s) or of the other nuclear air treatment system components under the test conditions.

(f) The test agent is listed in the Environmental Protection Agency, Toxic Substance Control Act (TSCA) inventory for commercial use.

Copyright ASME International
Provided by IHS under license with ASME
No reproduction or networking permitted without license from IHS
Not for Resale

SECTION TB
FIELD TESTING OF GAS-PROCESSING SYSTEMS

(In the Course of Preparation)

Copyright ASME International
Provided by IHS under license with ASME
No reproduction or networking permitted without license from IHS
Not for Resale

MANDATORY APPENDIX I

PREPARATION OF TECHNICAL INQUIRIES TO THE COMMITTEE ON NUCLEAR AIR AND GAS TREATMENT

ARTICLE I-1000 INTRODUCTION

The ASME Committee on Nuclear Air and Gas Treatment meets regularly to consider written requests for interpretations and revisions to the Code requirements, and to develop new requirements as dictated by technological development. The Committee's activities in this regard are limited stricktly to interpretations of the requirements or to the consideration of revisions to the present requirements on the basis of new data or technology. As a matter of published policy, ASME does not approve, certify, or endorse any item, construction, proprietary device, or activity, and accordingly, inquiries requiring such consideration will be returned. Moreover, ASME does not act as a consultant on specific engineering problems or on the general application or understanding of the Code requirements. If, based on the inquiry information submitted, it is the opinion of the Committee that the inquirer should seek assistance, the inquiry will be returned with the recommendation that such assistance be obtained.

Copyright ASME International
Provided by IHS under license with ASME
No reproduction or networking permitted without license from IHS
Not for Resale

ARTICLE I-2000
INQUIRY FORMAT

Inquiries shall be limited strictly to interpretations of the requirements or to the consideration of revisions to the present requirements on the basis of new data or technology. Inquiries shall include the following (a format guide is included in Nonmandatory Appendix A).

(a) Scope. Preferably involve a single requirement or closely related requirements. An inquiry letter concerning unrelated subjects will be subdivided by the Committee, considered individually, and may be responded to individually.

(b) Background. State purpose of inquiry, that would be either to obtain an interpretation of Code requirements or to propose consideration of a revision to the present requirements. Provide concisely the information needed for the Committee's understanding of the inquiry (with sketches as necessary), being sure to include references to the applicable Code section, division, edition, addenda, paragraphs, figures, and tables.

(c) Inquiry Structure. State in a condensed and precise question format, omitting superfluous background information, and where appropriate, compose in such a way that "yes" or "no" (perhaps with provisos) would be an acceptable reply. This inquiry statement should be technically and editorially correct. Those inquiries that in the Committee's (or the ASME staff secretary's) judgment are not clear will be returned to the sender for clarification and resubmittal.

(d) Proposed Reply. State what it is believed that the Code requires. If in the inquirer's opinion a revision to the Code is needed, recommended wording should be provided.

Additionally, the inquiry shall

(a) be submitted in typewritten form (however, legible, handwritten inquiries will be considered)

(b) include name and mailing address of the inquirer

(c) be submitted to the following address:

Secretary, Committee on
Nuclear Air and Gas Treatment
ASME International
Three Park Avenue
New York, NY 10016-5990

Copyright ASME International
Provided by IHS under license with ASME
No reproduction or networking permitted without license from IHS
Not for Resale

NONMANDATORY APPENDIX A

FORMAT GUIDE FOR TECHNICAL INQUIRIES

1. Reference CONAGT Code section/article paragraph: _____

2. Question (state so that a yes or no response can be given): _____

3. Reason for inquiry: _____

4. Proposed reply ☐ YES ☐ NO

   or proposed Code revision (if applicable): _____

Submitted by _____

Address _____

Date _____

Signature _____

Copyright ASME International
Provided by IHS under license with ASME
No reproduction or networking permitted without license from IHS
Not for Resale

Copyright ASME International
Provided by IHS under license with ASME
No reproduction or networking permitted without license from IHS
Not for Resale

ASME Services

ASME is committed to developing and delivering technical information. At ASME's Information Central, we make every effort to answer your questions and expedite your orders. Our representatives are ready to assist you in the following areas:

ASME Press
Codes & Standards
Credit Card Orders
IMechE Publications
Meetings & Conferences
Member Dues Status
Member Services & Benefits
Other ASME Programs
Payment Inquiries
Professional Development
Short Courses
Publications
Public Information
Self-Study Courses
Shipping Information
Subscriptions/Journals/ Magazines
Symposia Volumes
Technical Papers

How can you reach us? It's easier than ever!

There are four options for making inquiries* or placing orders. Simply mail, phone, fax, or E-mail us and an Information Central representative will handle your request.

Mail
ASME
22 Law Drive,
Box 2900
Fairfield, New Jersey
07007-2900

Call Toll Free
US & Canada: 800-THE-ASME
(800-843-2763)
Mexico: 95-800-THE-ASME
(95-800-843-2763)
Universal: 973-882-1167

Fax—24 hours
973-882-1717
973-882-5155

E-Mail—24 hours
Infocentral@asme.org

* Information Central staff are not permitted to answer inquiries about the technical content of this code or standard. Information as to whether or not technical inquiries are issued to this code or standard is shown on the copyright page. All technical inquiries must be submitted in writing to the staff secretary. Additional procedures for inquiries may be listed within.

Copyright ASME International
Provided by IHS under license with ASME
No reproduction or networking permitted without license from IHS
Not for Resale

Copyright ASME International
Provided by IHS under license with ASME
No reproduction or networking permitted without license from IHS
Not for Resale

Copyright ASME International
Provided by IHS under license with ASME
No reproduction or networking permitted without license from IHS
Not for Resale

ISBN 0-7918-2764-X



A12203

Copyright ASME International
Provided by IHS under license with ASME
No reproduction or networking permitted without license from IHS

Not for Resale