ASME A112.6.3-2001

(Revision and Redesignation of ASME A112.21.1M-1991)

FLOOR AND TRENCH DRAINS

AN AMERICAN NATIONAL STANDARD



The American Society of Mechanical Engineers

Copyright ASME International
Provided by IHS under license with ASME
No reproduction or networking permitted without license from IHS

Not for Resale

The American Society of Mechanical Engineers

AN AMERICAN NATIONAL STANDARD

FLOOR AND TRENCH DRAINS

ASME A112.6.3-2001

(Revision and Redesignation of ASME A112.21.1M-1991)

Copyright ASME International
Provided by IHS under license with ASME
No reproduction or networking permitted without license from IHS

Not for Resale

Date of Issuance: November 20, 2001

The next edition of this Standard is scheduled for publication in 2005. There will be no addenda or written interpretations of the requirements of this Standard issued to this edition.

ASME is the registered trademark of The American Society of Mechanical Engineers.

This code or standard was developed under procedures accredited as meeting the criteria for American National Standards. The Standards Committee that approved the code or standard was balanced to assure that individuals from competent and concerned interests have had an opportunity to participate. The proposed code or standard was made available for public review and comment that provides an opportunity for additional public input from industry, academia, regulatory agencies, and the public-at-large.

ASME does not "approve," "rate," or "endorse" any item, construction, proprietary device, or activity.

ASME does not take any position with respect to the validity of any patent rights asserted in connection with any items mentioned in this document, and does not undertake to insure anyone utilizing a standard against liability for infringement of any applicable letters patent, nor assume any such liability. Users of a code or standard are expressly advised that determination of the validity of any such patent rights, and the risk of infringement of such rights, is entirely their own responsibility.

Participation by federal agency representative(s) or person(s) affiliated with industry is not to be interpreted as government or industry endorsement of this code or standard.

ASME accepts responsibility for only those interpretations of this document issued in accordance with the established ASME procedures and policies, which precludes the issuance of interpretations by individuals.

No part of this document may be reproduced in any form,
in an electronic retrieval system or otherwise,
without the prior written permission of the publisher.

The American Society of Mechanical Engineers
Three Park Avenue, New York, NY 10016-5990

Copyright © 2001 by
THE AMERICAN SOCIETY OF MECHANICAL ENGINEERS
All Rights Reserved
Printed in U.S.A.

--`-`-`,,`,,`,`,,`---

Copyright ASME International
Provided by IHS under license with ASME
No reproduction or networking permitted without license from IHS
Not for Resale

FOREWORD

The American National Standards Committee A112 was established on July 27, 1955 for the purpose of standardizing plumbing materials and equipment. Its first organizational meeting was held on July 22, 1958, and Panel No. 21 was created on May 1, 1964 to establish standards for roof drains, floor drains, backwater valves, and other drainage specialties. Its scope was as follows: the recommendation of suitable existing standards in cooperation with interested sponsors, or the development of adequate new standards as needed for roof drains, floor drains, and other drains as used or installed in plumbing systems. The committee has since been reorganized as an ASME Standards Committee.

The ASME A112 Committee was restructured in 1998 in accordance with the ASME Redesign Process, and Panel 21 Working Group 1 became Project Team 6.3. The Project Team met twice to update this Standard, which now includes criteria from the International Association of Plumbing and Mechanical Official's (IAMPO) Product Standards PS 4 and PS 16.

Suggestions for improvement of this Standard are welcome. They should be sent to the American Society of Mechanical Engineers, Three Park Avenue, New York, NY 10016-5990.

This revision and redesignation of ASME A112.21.1M-1991 was approved as an American National Standard on May 4, 2001.

--`-`-`,,`,,`,`,,`---

Copyright ASME International
Provided by IHS under license with ASME
No reproduction or networking permitted without license from IHS

Not for Resale

ASME STANDARDS COMMITTEE A112
Standardization of Plumbing Materials and Equipment

(The following is the roster of the Committee at the time of approval of this Standard.)

OFFICERS

P. J. Higgins, *Chair*
S. A. Remedios, *Vice Chair*
C. J. Gomez, *Secretary*

COMMITTEE PERSONNEL

R. H. Ackroyd, Consultant
J. A. Ballanco, JB Engineering & Code Consulting
S. L. Cavanaugh, United Association
A. Cohen, A. Cohen & Associates
P. V. DeMarco, American Standard, Inc.
N. Covino, *Alternate,* American Standard, Inc.
G. S. Duren, Code Compliance, Inc.
R. Emmerson, Chicago Faucets Co.
F. C. Evans, Zin-Plas Corp.
L. S. Galowin, National Institute of Standards and Technology
C. J. Gomez, The American Society of Mechanical Engineers
R. I. Greenwald, Sunroc Corp.
G. Gress, BOCA International
J. P. Gronewold, NSF
P. J. Higgins, PJ Higgins & Associates, Inc.
D. E. Holloway, SGS US Testing Co.
M. Klimboff, Consultant
M. T. Kobel, IAPMO
J. W. Lauer, Sloan Valve Co.
R. M. Martin, California Energy Commission
P. Meikle, Underwriters Laboratories, Inc.
L. M. Kriegbaum, *Alternate,* Underwriters Laboratories, Inc.
L. E. Mercer, Moen, Inc.
S. Rawalpindiwala, Kohler Co.
J. A. Sargent, *Alternate,* Kohler Co.
S. A. Remedios, Delta Faucet Co.
G. L. Simmons, Charlotte Pipe and Foundry
W. M. Smith, Jay R. Smith Manufacturing Co.
D. W. Viola, Plumbing Manufacturers Institute
R. E. White, Richard E. White & Associates
W. C. Whitehead, Plumbing & Drainage Institute

PERSONNEL OF A112 PROJECT TEAM 6.3 — Floor Drains

S. J. McDanal, *Project Team Leader*, Jay R. Smith Manufacturing Co.
W. C. Whitehead, *Deputy Project Team Leader*, Plumbing & Drainage Institute
W. M. Smith, *Project Team Secretary*, Jay R. Smith Manufacturing Co.
R. H. Ackroyd, Consultant
G. J. Flegel, Flegel Consulting Services
R. L. George, SmithGroup, Inc., Architect, Engineers

--`-`-`-,,`,,`,`,,`---

Copyright ASME International
Provided by IHS under license with ASME
No reproduction or networking permitted without license from IHS
Not for Resale

C. R. Graham, Martech Enterprises
P. J. Higgins, PJ Higgins & Associates, Inc.
M. T. Kobel, IAPMO
S. Rawalpindiwala, Kohler Co.
J. A. Sargent, Kohler Co.
D. W. Viola, Plumbing Manufacturers Institute
R. E. White, Richard E. White & Associates

Copyright ASME International
Provided by IHS under license with ASME
No reproduction or networking permitted without license from IHS
Not for Resale

CONTENTS

Foreword iii
Committee Roster iv

1 General 1
1.1 Scope 1
1.2 Units of Measurement 1
1.3 Illustrations 1
1.4 Reference Standards 1
1.5 Definitions 1

2 General Requirements 3
2.1 Drain Bodies 3
2.2 Shower Drains 3
2.3 Bolts and Fasteners 3

3 Outlets — Types and Connections 3
3.1 Outlet Types 3
3.2 Outlet Connections 3
3.3 Tolerances 4

4 Top Dimensions — Grate-Free Area 4
4.1 Geometry for the Drain Top 4
4.2 Opening Area Requirements for Various Classifications of Drains 5
4.3 Openings in Top Grates 5

5 Top Loading — Classification 5
5.1 Loading Classifications 5
5.2 Test Procedure for Grate Loading 5

6 Materials and Finishes 5
6.1 Materials 5
6.2 Finishes 6

7 Variations 6
7.1 Extension 6
7.2 Anchor Flange 6
7.3 Auxiliary Inlet 6
7.4 Backwater Valve 6
7.5 Clamping Device 6
7.6 Dome Grate 6
7.7 Floor Cleanout 7
7.8 Hinged Grate 7
7.9 Secondary Strainer 7

Copyright ASME International
Provided by IHS under license with ASME
No reproduction or networking permitted without license from IHS
Not for Resale

7.10 Sediment Bucket 7
7.11 Trap Primer Connection 7
7.12 Heel-Resistant Strainers and Grates 7

8 Testing 7

9 Marking 7

Figures

1 Area Drain Nomenclature 2
2 Floor Drain Nomenclature 2
3 Drain for Built-up Shower — Nomenclature 2
4 Drain for Prefabricated Shower — Nomenclature 2
5 Trench Drain Nomenclature 2
6 Bottom Outlet 3
7 Side Outlet 3
8 Side Outlet Integral Trap 4
9 Optional Features Available for Use With Drains 7

Tables

1 Minimum Dimensions for Threaded Outlet Connections 4
2 Minimum Dimensions for Inside Caulk (Gasket) Outlet Connections 4
3 Minimum Dimensions for Hubbed (Push-on) Outlet Connections 4
4 Open Area Requirements for Drains 5

--`,,`,,`-`-`,,`,,`,`,,`---

Copyright ASME International
Provided by IHS under license with ASME
No reproduction or networking permitted without license from IHS
Not for Resale

Copyright ASME International
Provided by IHS under license with ASME
No reproduction or networking permitted without license from IHS
Not for Resale

FLOOR AND TRENCH DRAINS

1 GENERAL

1.1 Scope

This Standard establishes design requirements for floor, area, adjustable floor, and trench drains that are used inside of, or outside and immediately adjacent to, building structures that are typically nonresidential. It includes definitions, nomenclature, outlet types and connections, grate-free area, top loading classifications, materials and finishes, and variations in product design.

1.2 Units of Measurement

Values are stated in U.S. Customary units and the International System of Units (SI). The U.S. Customary units shall be considered as the standard.

1.3 Illustrations

The illustrations (figures) included in this Standard are intended only to describe and portray typical floor and trench drain types and are not intended to restrict design or to be used for specification purposes.

1.4 Reference Standards

The following documents form a part of this Standard to the extent specified herein (the latest issue shall apply):

ASTM A 48, Grey Iron Castings
ASTM A 74, Cast Iron Soil Pipe & Fittings
ASTM A 307, Carbon Steel Externally Threaded Fasteners
ASTM A 536, Ductile Iron Castings
ASTM A 563, Carbon and Alloy Steel Nuts
ASTM A 888, Hubless Cast Iron Sanitary Systems
ASTM B 16, Free Cutting Brass Rod, Bar and Shapes for Use in Screw Machines
ASTM B 584, Copper Alloy Sand Castings for General Applications
ASTM C 564, Rubber Gaskets for Cast Iron Soil Pipe and Fittings
ASTM C 584, Copper Alloy Sand Castings for General Applications
ASTM D 1248, Polyethylene Plastic Molding & Extrusion Materials
ASTM D 1784, Rigid Poly (Vinyl Chloride) (PVC) Compounds and Chlorinated Poly (Vinyl Chloride) (CPVC) Compounds
ASTM D 2661, Acrilonitrile-Butadiene-Styrene (ABS) Schedule 40 Plastic Drain, Waste and Vent Pipe and Fittings
ASTM D 2665, Poly (Vinyl Chloride) (PVC) Plastic Drain, Waste and Vent Pipe and Fittings
ASTM D 3965, Rigid Acrilonitrile-Butadiene-Styrene (ABS) Compounds for Pipe and Fittings
ASTM D 4066, Nylon Injection and Extrusion Materials
ASTM D 4101, Propylene Plastic Injection and Extrusion Materials
ASTM F 628, Acrilonitrile-Butadiene-Styrene (ABS) Schedule 40 Plastic Drain, Waste and Vent Pipe with a Cellular Core
ASTM G 23, Practice for Operating Light- and Water-Exposure Apparatus (Carbon-Arc Type) for Exposure of Non-Metallic Materials

Publisher: American Society for Testing and Materials (ASTM), 100 Barr Harbor Drive, West Conshohocken, PA 19428-2959.

ASME B1.20.1, Pipe Threads, General Purpose (Inch)

Publisher: The American Society of Mechanical Engineers (ASME), Three Park Avenue, New York, NY 10016-5990

1.5 Definitions

area, grate-free: total area of the drainage openings in the grate.

area, open: see *area, grate-free*.

blow hole: a hole in casting due to air or gas in the metal or mold.

cold shut: casting defects formed when two streams of metal become so cold that they do not fuse upon meeting, creating an incomplete casting.

drain, adjustable floor: a floor drain designed for use in finished floor areas, including showers, with an adjustable strainer and grate and a seepage flange on the body.

Copyright ASME International
Provided by IHS under license with ASME
No reproduction or networking permitted without license from IHS
Not for Resale

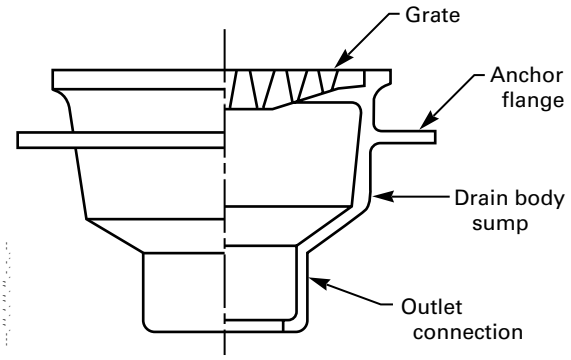

FIG. 1 AREA DRAIN NOMENCLATURE

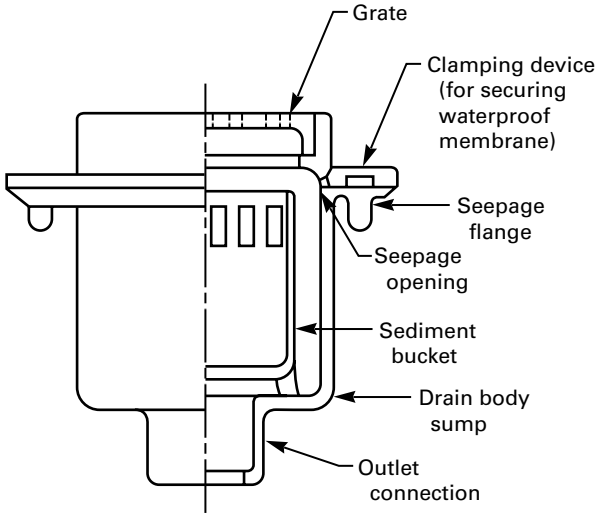

FIG. 2 FLOOR DRAIN NOMENCLATURE

drain, area: a manufactured receptor designed to receive and convey run-off water or other liquid from the areas immediately adjacent to the building structure to the drainage system (see Fig. 1).

drain, floor: a manufactured receptor designed to receive and convey run-off water or other liquid from building floors to the drainage system (see Fig. 2).

drain, shower: a manufactured receptor designed to receive and convey the water in a built-up or prefabricated shower (see Figs. 3 and 4).

drain, trench: a long, narrow, manufactured receptor designed to receive and convey run-off water or other liquids to the drainage system, from a broad flat area inside of or immediately adjacent to the building structure (see Fig. 5).

fin: projection on castings due to imperfect joints.

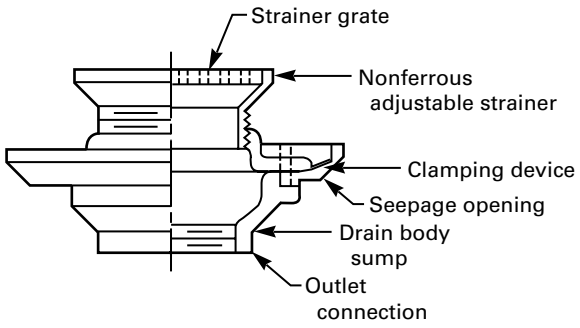

FIG. 3 DRAIN FOR BUILT-UP SHOWER — NOMENCLATURE

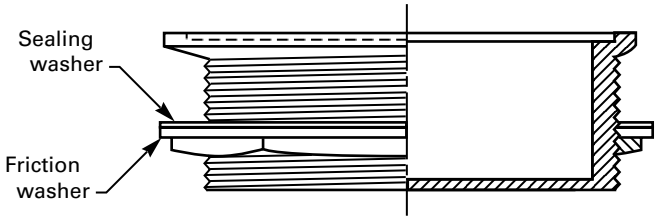

FIG. 4 DRAIN FOR PREFABRICATED SHOWER — NOMENCLATURE

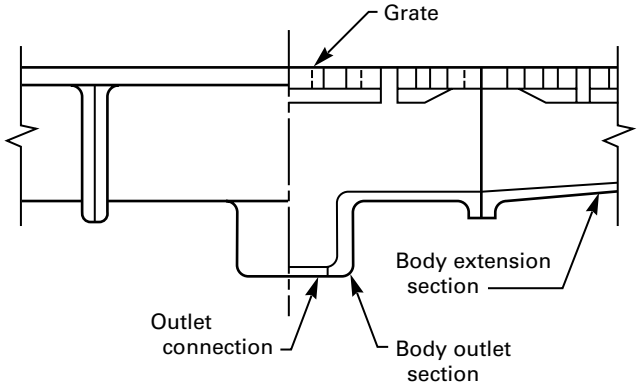

FIG. 5 TRENCH DRAIN NOMENCLATURE

heel-proof opening: a grate designed to resist entry of high-heeled shoes.

seepage opening: a perforation (hole) in the side wall of drain body sump (usually several are included) above seepage (flashing) flange to receive any seepage from around the drain and to direct such seepage into the sump.

weephole: same as seepage opening.

Copyright ASME International
Provided by IHS under license with ASME
No reproduction or networking permitted without license from IHS
Not for Resale

2 GENERAL REQUIREMENTS

2.1 Drain Bodies

2.1.1 Materials. Drain bodies shall be of cast iron, copper alloy, ABS, PVC, PE, PP, or other approved materials meeting the requirements of this Standard. Materials shall comply with the standards cited in para. 1.4. No obstruction shall be permitted in the caulking area of a body.

2.1.2 Weep Holes. Weep holes in bodies shall be a minimum of three in number and shall be a minimum of 0.125 in. (3.2 mm) in diameter.

2.1.3 Smooth Mating Surfaces. The body and clamping ring shall have smooth, level surfaces to provide a watertight joint with the membrane.

2.2 Shower Drains

2.2.1 Strainers. Shower drain strainers shall be stainless steel 300 series alloy with a minimum thickness of 0.050 in. (1.3 mm). The strainer shall be of the snap-on type or screw fastened. The minimum waterway area of strainers shall be equal to the area of a 2 in. pipe [3.1416 in.^{2} (2 027 mm^2)].

2.2.2 Crown/Collar. A 24 gauge corrosion-resistant crown and/or collar of $\frac{1}{4}$ in. brass ring shall be required between the strainer and cast iron bodies.

2.3 Bolts and Fasteners

Bolts and fasteners for cast iron or copper alloy drains shall be a minimum of $\frac{5}{16}$ in. NC. Bolts and fasteners for plastic drains shall be a minimum of $\frac{1}{4}$ in. NC. A minimum of three bolts per drain shall be provided. Screw and bolts provided for shower drains shall be 300 series stainless steel or copper alloy complying with ASTM B 584 (Alloy C 85200 or C 85400) or ASTM B 16.

3 OUTLETS — TYPES AND CONNECTIONS

3.1 Outlet Types

3.1.1 Bottom Outlet. Threaded, inside caulk, spigot, hubless, or solvent-welded with centerline of outlet vertical. (See Fig. 6.)

3.1.2 Side Outlet. Threaded, hub (outside caulk), spigot, hubless, or solvent-welded with centerline of outlet horizontal. (See Fig. 7.)

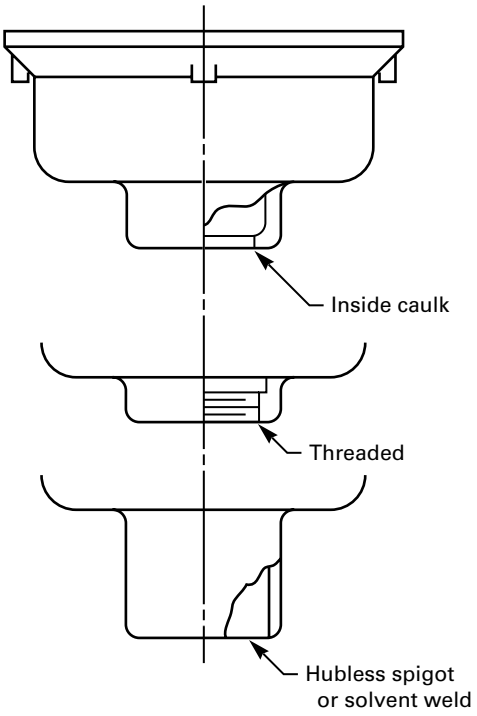

FIG. 6 BOTTOM OUTLET

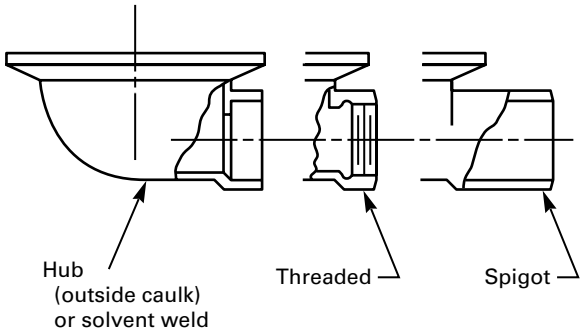

FIG. 7 SIDE OUTLET

3.1.3 Side Outlet With Integral Trap. Threaded, hub (outside caulk), spigot, hubless or solvent-welded with centerline of outlet horizontal, and with P trap integral with drain body sump. (See Fig. 8.)

3.2 Outlet Connections

3.2.1 Threaded. All threaded outlet connections shall be American Standard Taper Pipe Threads for general use (NPT) and shall conform to the minimum dimensions shown in Table 1.

Copyright ASME International
Provided by IHS under license with ASME
No reproduction or networking permitted without license from IHS
Not for Resale

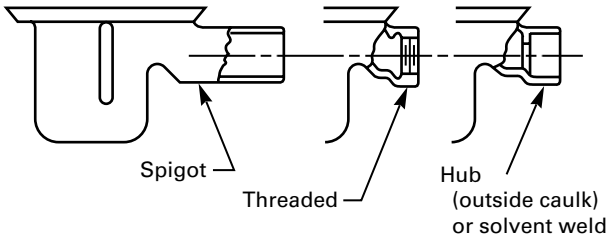

FIG. 8 SIDE OUTLET INTEGRAL TRAP

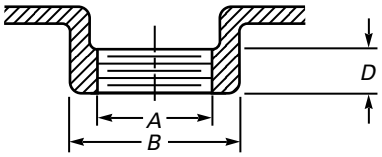

TABLE 1 MINIMUM DIMENSIONS FOR THREADED OUTLET CONNECTIONS

Nominal Pipe Size, in.	*A* NPT, in.	*B*		*D*	
		in.	mm	in.	mm
1½	1½	2 5/16	59	7/16	11
2	2	2 7/8	73	7/16	11
2½	2½	3 3/8	86	5/8	16
3	3	4 1/8	105	3/4	19
4	4	5 1/8	130	13/16	21
5	5	6 1/4	159	7/8	22
6	6	7 1/4	184	1	25

3.2.2 Inside Caulk. All inside caulk outlet connections shall conform to the minimum dimensions shown in Table 2. No obstructions shall be permitted in the caulking areas.

3.2.3 Hub (Outside Caulk). All hub connections shall conform to the minimum dimensions shown in Table 3.

3.2.4 Spigot. All spigot outlet connections shall conform to the beadless dimensions shown in ASTM A 74 or ASTM A 888.

3.2.5 Solvent Cement. All solvent-cemented outlet connections shall be made using appropriate solvent cement and methods of joining. ABS solvent cement joints shall be in accordance with ASTM D 2661 and PVC solvent cement joints shall be in accordance with ASTM D 2665.

3.2.6 O-ring or Gasketed Joints. O-ring or gasketed joints shall comply with ASTM C 564, ASTM C 1440, or CSA B602.

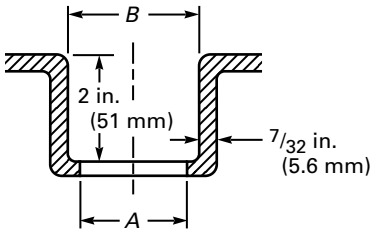

TABLE 2 MINIMUM DIMENSIONS FOR INSIDE CAULK (GASKET) OUTLET CONNECTIONS

Nominal Pipe Size, in.	*A*		*B*	
	in.	mm	in.	mm
2	2½	64	3	76
3	3 5/8	92	4 1/8	105
4	4 5/8	117	5 1/8	130
5	5 5/8	143	6 1/8	156
6	6 5/8	168	7 1/8	181

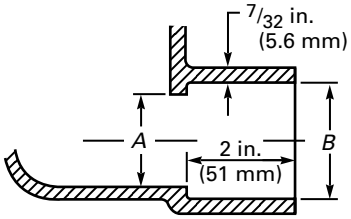

TABLE 3 MINIMUM DIMENSIONS FOR HUBBED (PUSH-ON) OUTLET CONNECTIONS

Nominal Pipe Size, in.	*A*		*B*	
	in.	mm	in.	mm
2	2	51	3	76
3	3	76	4 1/8	105
4	4	102	5 1/8	130
5	5	127	6 1/8	156
6	6	152	7 1/8	181

3.3 Tolerances

Dimensions given in Tables 1, 2, and 3 and the associated figures shall be subject to standard commercial tolerances of ± 1/16 in. (± 1.6 mm).

4 TOP DIMENSIONS — GRATE-FREE AREA

4.1 Geometry for the Drain Top

The drain top shall be any geometric shape.

Copyright ASME International
Provided by IHS under license with ASME
No reproduction or networking permitted without license from IHS
Not for Resale

TABLE 4 OPEN AREA REQUIREMENTS FOR DRAINS

Outlet Connection Size, in.	Transverse Area of Connecting Pipe		Grate Free Area Min.	
	$in.^2$	cm^2	$in.^2$	cm^2
Floor Drains				
2	3.14	20.3	5.0	32.3
3	7.06	45.5	11.0	71.0
4	12.5	80.6	18.0	116.1
5	19.6	126.4	30.0	193.5
6	28.3	182.5	42.0	270.9
Shower Drains				
2	3.14	20.3	5.0	32.3
3	7.06	45.5	11.0	71.0
4	12.5	80.6	18.0	116.1
Area and Trench Drains (subject to rainfall)				
2	3.14	20.3	6.5	41.9
3	7.06	45.5	14.0	90.3
4	12.5	80.6	25.0	161.3
5	19.6	126.4	40.0	258.0
6	28.3	182.5	56.0	361.2

4.2 Open Area Requirements for Various Classifications of Drains

Opening area requirements for drains shall be as shown in Table 4.

4.3 Openings in Top Grates

Openings shall be any geometric shape. Openings shall be sized to exclude debris and accommodate the anticipated traffic. When drainage requirements dictate openings that would permit entrance of debris, a sediment bucket shall be installed in the drain body sump to intercept this debris.

5 TOP LOADING — CLASSIFICATION

5.1 Loading Classifications

Grates and top rims shall be designed to meet the following loading classifications:

5.1.1 Light Duty. Grates having safe live load (as calculated in para. 5.2.5) under 2,000 lb (900 kg).

5.1.2 Medium Duty. Grates having safe live load (as calculated in para. 5.2.5) between 2,000 lb (900 kg) and 4,999 lb (2 250 kg).

5.1.3 Heavy Duty. Grates having safe live load (as calculated in para. 5.2.5) between 5,000 lb (2 250 kg) and 7,499 lb (3 375 kg).

5.1.4 Extra Heavy Duty. Grates having safe live load (as calculated in para. 5.2.5) between 7,500 lb (3 375 kg) and 10,000 lb (4 500 kg).

5.1.5 Special Duty. Grates having safe live load (as calculated in para. 5.2.5) over 10,000 lb (4 500 kg) shall be considered special duty.

5.2 Test Procedure for Grate Loading

Safe live load requirements, as listed in para. 5.1 shall be determined as follows:

5.2.1 Load Classifications. Load classifications as stated in para. 5.1 shall be determined by laboratory tests.

5.2.2 Platen Size. A 3.5 in. (89 mm) diameter platen shall be applied to the center of the grate specimen.

5.2.3 Loading. Loading shall be applied slowly so that point of failure can be observed.

5.2.4 Point of Failure

(a) Brittle Materials (Cast Iron). The point of failure of brittle materials shall be the load (in pounds or kilograms) at which the first fracture on any part of the specimen appears.

(b) Ductile Material. The point of failure of ductile materials shall be the load at which the permanent set (at the point of loading) is greater than 2% of the longest transverse dimension of the specimen.

5.2.5 Safe Live Load. The maximum safe live load shall be computed by dividing the load at failure by two.

6 MATERIALS AND FINISHES

6.1 Materials

The items covered in this Standard shall be of the material specified and shall meet all applicable requirements and standards given herein. The castings for these drains shall be sound, free of blow holes, cold shuts, and other imperfections, and shall be of uniform wall thickness and true to pattern. They shall also be clean and free of fins. It shall not be the intent of this Standard to limit acceptable materials to those included in this section. The use of other materials

Copyright ASME International
Provided by IHS under license with ASME
No reproduction or networking permitted without license from IHS
Not for Resale

meeting the requirements of this Standard and having comparable performance shall be permitted.

6.1.1 Cast Iron. Castings shall conform to ASTM Specification for Grey Iron Castings A 48, Class 25. The minimum thickness for the casting shall be $^{7}/_{32}$ in. (5.6 mm).

6.1.2 Copper Alloy. Castings shall conform to the chemical and mechanical requirements of ASTM B 584 for Copper Alloy Nos. C83600, C83800, and C84400. The minimum thickness for the casting shall be $^{5}/_{32}$ in. (4 mm).

6.1.3 Leaded Nickel Bronze (Nickel Silver). Castings shall conform to the chemical and mechanical requirements of ASTM B 584 for Copper Alloy Nos. C97300, C97600, and C99700. The minimum thickness for the casting shall be $^{5}/_{32}$ in. (4 mm).

6.1.4 ABS. Floor drain bodies manufactured from Acrylonitrile-Butadiene-Styrene (ABS) shall conform to physical property requirements contained in ASTM D 3965. The cell classification shall be 3-2-2-2-2. The minimum thickness for the mold shall be $^{5}/_{32}$ in. (4 mm). Inserts for fasteners in plastic drains shall be molded into the plastic material.

6.1.5 PVC. Floor drain bodies manufactured from Poly (Vinyl Chloride) (PVC) shall conform to physical property requirements contained in ASTM D1784. The cell classification shall be 12454-B, 12454-C, or 14333-C. The minimum thickness for the mold shall be $^{5}/_{32}$ in. (4 mm). Inserts for fasteners in plastic drains shall be molded into the plastic material.

6.1.6 Bolting Materials. The materials for studs, nuts, cap screws, and other steel fasteners shall at least equal the requirements of ASTM Specifications A 307, Carbon Steel Externally Threaded Fasteners, Grade A, and A 563, Carbon and Alloy Steel Nuts, Grade A. Threads shall be Classes 2A and 2B, and shall be plated.

6.2 Finishes

In all cases in which parts are to be coated or plated, they shall be cleaned to provide a suitable surface for proper bonding of the finish.

6.2.1 Paint Coatings. Iron castings shall be cleaned and coated with a suitable paint, lacquer, or synthetic coating of quality to provide protection against rusting of ferrous surfaces during normal handling and warehousing prior to installation.

6.2.2 Cadmium Plate. After preplating cleaning, parts shall be given a Commercial Grade Cadmium Plate.

6.2.3 Chrome Plate, Decorative. Parts shall be polished prior to plating and then given a Commercial Grade Copper-Nickel-Chromium Plate.

6.2.4 Bronze Chromate. Parts shall first be given a Commercial Grade Cadmium Plate and then a Commercial Grade Bronze Chromate treatment.

6.2.5 Zinc Plate. After preplating cleaning, parts shall be given a Commercial Grade Zinc Plate.

7 VARIATIONS

The optional features listed are stated here to identify the variations available for different applications. (See also Fig. 9.)

7.1 Extension

A component that is used to raise the grate to the floor level where deeper slabs are encountered.

7.2 Anchor Flange

A flange that extends from the side of drain body to enable anchoring of the drain to the concrete slab.

7.3 Auxiliary Inlet

A connection in the side of drain body sump that receives discharge from another fixture, appliance, or drain.

7.4 Backwater Valve

A component that is used to prevent backflow of waste or storm water into the building.

7.5 Clamping Device

This component is installed in floors where a waterproof membrane, or metallic or composition flashing is required. The clamping device shall be a secured nonpunctuating type of ring.

7.6 Dome Grate

A convex grate that has available grate-free area above floor level to enable drainage if debris collects around the base of the grate.

Copyright ASME International
Provided by IHS under license with ASME
No reproduction or networking permitted without license from IHS
Not for Resale

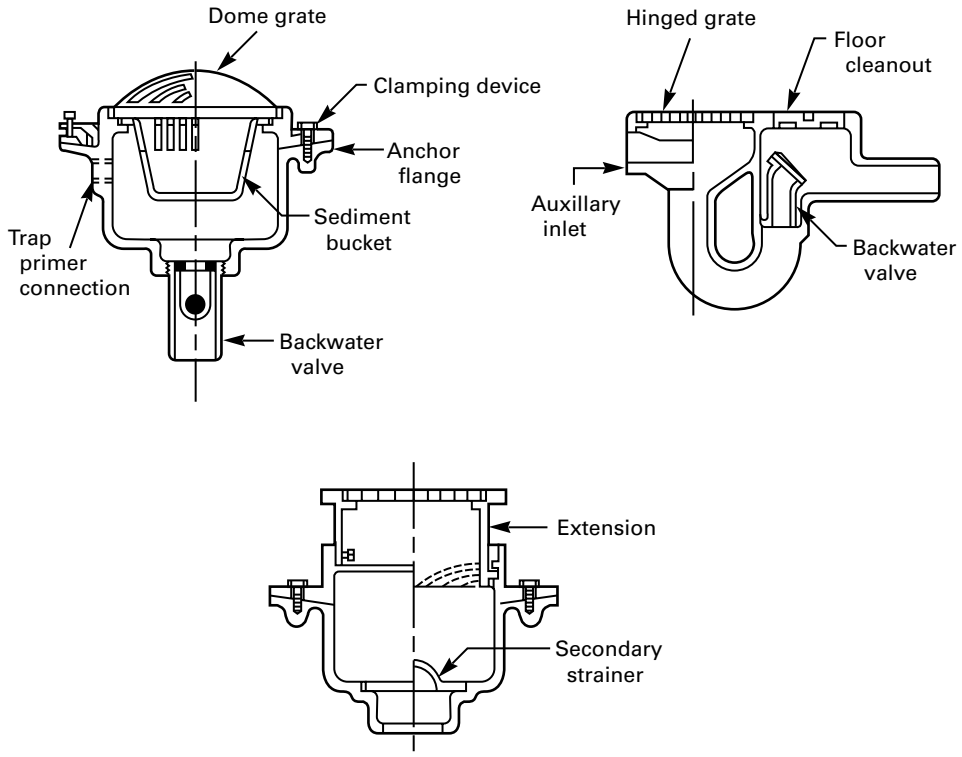

FIG. 9 OPTIONAL FEATURES AVAILABLE FOR USE WITH DRAINS

7.7 Floor Cleanout

A cleanout that permits access to the drain line from finished floor level.

7.8 Hinged Grate

A component that enables access to the drain without completely removing the secured grate from the body.

7.9 Secondary Strainer

An additional strainer, set in the base of drain body sump, that intercepts debris that might pass through grate openings.

7.10 Sediment Bucket

A device that intercepts debris before it enters the drain line.

7.11 Trap Primer Connection

A tapped boss on the drain body used to receive discharge from the trap primer valve.

7.12 Heel-Resistant Strainers and Grates

A grate designed to resist entry of high-heeled shoes, in which the maximum grate hole size in least dimension shall be $^{5}/_{16}$ in. (8 mm).

8 TESTING

Plastic floor drains and related components intended for exposure to outside elements shall be tested for weathering in accordance with the methodology contained in ASTM G 23, or accelerated weathering tests in accordance with ASTM D 4329 test cycle B. The test shall be conducted for a minimum of 2,000 hr. After the test, tensile strength shall be no less than a minimum 90% of its original value; and the hardness shall not be less than 20% of its original value. Test samples shall be cut from the finished product or molded from the material used to manufacture the finished product.

9 MARKING

The floor drain shall be marked with the manufacturer's name or trademark.

Copyright ASME International
Provided by IHS under license with ASME
No reproduction or networking permitted without license from IHS
Not for Resale

ASME STANDARDS RELATED TO PLUMBING

Air Gaps in Plumbing Systems ..... A112.1.2-1991(R1998)
Air Gap Fittings for Use With Plumbing Fixtures, Appliances, and Appurtenances A112.1.3-2000
Performance Standard and Installation Procedures for Stainless Steel Drainage Systems for Sanitary, Storm, and Chemical Applications, Above and Below Ground A112.3.1-1993
Macerating Toilet Systems and Related Components A112.3.4-2000
Water Heater Relief Valve Drain Tubes ..... A112.4.1-1993(R1998)
Plastic Fittings for Connecting Water Closets to the Sanitary Drainage System A112.4.3-1999
Floor-Affixed Supports for Off-the-Floor Plumbing Fixtures for Public Use A112.6.1M-1997
Framing-Affixed Supports for Off-the-Floor Water Closets With Concealed Tanks A112.6.2-2000
Enameled and Epoxy Coated Cast Iron and PVC Plastic Sanitary Floor Sinks A112.6.7-2001
Backwater Valves ..... A112.14.1-1975(R1998)
Grease Interceptors A112.14.3-2000
Grease Removal Devices A112.4.4-2001
Plumbing Fixture Fittings A112.18.1-2000
Performance Requirements for Backflow Protection Devices and Systems in Plumbing Fixture Fittings A112.18.3M-1996
Flexible Water Connectors A112.18.6-1999
Deck-Mounted Bath/Shower Transfer Valves With Integral Backflow Protection A112.18.7-1999
Enameled Cast Iron Plumbing Fixtures ..... A112.19.1M-1994(R1999)
Vitreous China Plumbing Fixtures A112.19.2M-1998
Stainless Steel Plumbing Fixtures (Designed for Residential Use) A112.19.3-2000
Porcelain Enameled Formed Steel Plumbing Fixtures ..... A112.19.4M-1994(R1999)
Trim for Water-Closet Bowls, Tanks, and Urinals A112.19.5-1999
Hydraulic Performance Requirements for Water Closets and Urinals A112.19.6-1995
Whirlpool Bathtub Appliances A112.19.7M-1995
Suction Fittings for Use in Swimming Pools, Wading Pools, Spas, Hot Tubs, and Whirlpool Bathtub Appliances ..... A112.19.8M-1987(R1996)
Non-Vitreous Ceramic Plumbing Fixtures ..... A112.19.9M-1991(R1998)
Dual Flush Devices for Water Closets A112.19.10-1994
Wall Mounted and Pedestal Mounted, Adjustable and Pivoting Lavatory and Sink Carrier Systems A112.19.12-2000
Bathtub/Whirlpool Bathtubs With Pressure Sealed Doors A112.19.15-2001
Floor Drains ..... A112.21.1M-1991(R1998)
Roof Drains A112.21.2M-1983
Hydrants for Utility and Maintenance Use ..... A112.21.3M-1985(R1995)
Cleanouts ..... A112.36.2M-1991(R1998)

The ASME Publications Catalog shows a complete list of all the Standards published by the Society. For a complimentary catalog, or the latest information about our publications, call 1-800-THE-ASME (1-800-843-2763).

Copyright ASME International
Provided by IHS under license with ASME
No reproduction or networking permitted without license from IHS
Not for Resale



Copyright ASME International
Provided by IHS under license with ASME
No reproduction or networking permitted without license from IHS

Not for Resale