STD.ASME A112.6.1M-ENGL 1997 ■ 0759670 0588022 706 ■

ASME A112.6.1M-1997
(Revision of ASME A112.6.1M-1988)

FLOOR-AFFIXED SUPPORTS FOR OFF-THE-FLOOR PLUMBING FIXTURES FOR PUBLIC USE

AN AMERICAN NATIONAL STANDARD



The American Society of
Mechanical Engineers

Copyright ASME International
Provided by IHS under license with ASME
No reproduction or networking permitted without license from IHS

Not for Resale

STD.ASME A112.6.1M-ENGL 1997 ■ 0759670 0588023 642 ■

The American Society of Mechanical Engineers

AN AMERICAN NATIONAL STANDARD

FLOOR-AFFIXED SUPPORTS FOR OFF-THE-FLOOR PLUMBING FIXTURES FOR PUBLIC USE

ASME A112.6.1M-1997
(Revision of ASME A112.6.1M-1988)

Copyright ASME International
Provided by IHS under license with ASME
No reproduction or networking permitted without license from IHS
Not for Resale

Date of Issuance: December 22, 1997

This Standard will be revised when the Society approves the issuance of a new edition. There will be no addenda or written interpretations of the requirements of this Standard issued to this edition.

ASME is the registered trademark of The American Society of Mechanical Engineers.

This code or standard was developed under procedures accredited as meeting the criteria for American National Standards. The Consensus Committee that approved the code or standard was balanced to assure that individuals from competent and concerned interests have had an opportunity to participate. The proposed code or standard was made available for public review and comment which provides an opportunity for additional public input from industry, academia, regulatory agencies, and the public-at-large.

ASME does not "approve," "rate," or "endorse" any item, construction, proprietary device, or activity.

ASME does not take any position with respect to the validity of any patent rights asserted in connection with any items mentioned in this document, and does not undertake to insure anyone utilizing a standard against liability for infringement of any applicable Letters Patent, nor assume any such liability. Users of a code or standard are expressly advised that determination of the validity of any such patent rights, and the risk of the infringement of such rights, is entirely their own responsibility.

Participation by federal agency representative(s) or person(s) affiliated with industry is not to be interpreted as government or industry endorsement of this code or standard.

ASME accepts responsibility for only those interpretations issued in accordance with governing ASME procedures and policies which preclude the issuance of interpretations by individual volunteers.

No part of this document may be reproduced in any form,
in an electronic retrieval system or otherwise,
without the prior written permission of the publisher.

The American Society of Mechanical Engineers
345 East 47th Street, New York, NY 10017

Copyright © 1997 by
THE AMERICAN SOCIETY OF MECHANICAL ENGINEERS
All Rights Reserved
Printed in U.S.A.

Copyright ASME International
Provided by IHS under license with ASME
No reproduction or networking permitted without license from IHS

Not for Resale

FOREWORD

(This Foreword is not part of ASME A112.6.1M-1997.)

Much of the design evolution of sanitary plumbingware has occurred during this century as water supply and waste systems gained universal acceptance as a basic necessity. About midway through this period, the desirability of off-the-floor water closets and their inherent advantages in improving toilet-room sanitation was recognized. Wide use of this new concept, however, was delayed for many years. When the first off-the-floor closets were designed, the problems of supporting and connecting them to waste systems had not been anticipated; and as a result there were damaged walls and partitions and leaking waste systems. Slowly, a few supporting methods were developed and marketed, but in many instances, installations of off-the-floor fixtures still presented problems. Then, subsequent to World War II, with the introduction of the combination waste fitting and supporting system for off-the-floor water closets, installation was simplified and problems were eliminated to the extent that now this sanitary approach to modern toilet room design has become commonplace.

After such a long development period, the manufacturers of fixture supports were keenly aware of the need for sound design and engineering practices. Accordingly, the benefits of basic design standards were apparent to them and a study was initiated as an industry effort in 1961. Prior to the completion of this work, ASA Sectional Committee A112 (subsequently designated the American National Standards Committee A112, and currently the ASME Standards Committee A112, Standardization of Plumbing Materials and Equipment) was organized and Panel No. 6 of this Committee was assigned the responsibility of developing standards for fixture chair carriers and other supports for off-the-floor fixtures. The original standard resulting from this assignment was granted approval by the American National Standards Institute on March 2, 1972, and issued as ANSI A112.6.1-1972.

Engineering members of the Plumbing & Drainage Institute were appointed to the Task Forces of Panel No. 6 on October 18, 1976 to prepare a revision. The first meeting was held on July 27, 1977, following which a rough draft of the revision was submitted to the task force members. Changes were made and the proposal was approved by Panel No. 6 and subsequently by the A112 Main Committee. That revision was approved by the American National Standards Institute (ANSI) on November 15, 1979. The standard was reviewed again in 1986, resulting in a new format and an expanded scope. This revision of the 1979 edition was approved by ANSI on November 17, 1988.

This current revision includes minor improvements, including the expansion of mandatory language. Suggestions for improvements to this Standard should be sent to The American Society of Mechanical Engineers, Attn: Secretary, A112 Main Committee, 345 East 47th Street, New York, NY 10017.

This revision was approved as an American National Standard on September 8, 1997.

Copyright ASME International
Provided by IHS under license with ASME
No reproduction or networking permitted without license from IHS
Not for Resale

ASME STANDARDS COMMITTEE A112
Standardization of Plumbing Materials and Equipment

(The following is the roster of the Committee at the time of approval of this Standard.)

OFFICERS

P. J. Higgins, *Chair*
J. A. Ballanco, *Vice Chair*
C. J. Gomez, *Secretary*

COMMITTEE PERSONNEL

R. H. Ackroyd, Watts Regulator Co.
J. A. Ballanco, JB Engineering & Code Consulting
S. L. Cavanaugh, California State Pipe Trades
A. Cohen, Copper Development Association, Inc.
P. V. DeMarco, American Standard, Inc.
G. S. Duren, Code Compliance, Inc.
F. C. Evans, Zin-Plas Corporation
L. S. Galowin, National Institute of Standards and Technology
C. J. Gomez, The American Society of Mechanical Engineers
R. I. Greenwald, Sunroc Corporation
E. Grunewald, Association of Home Appliance Manufacturers
P. J. Higgins, PJ Higgins & Associates, Inc.
D. E. Holloway, United States Testing Co., Inc.
M. Klimboff, Consutant
R. M. Martin, California Energy Commission
S. Moinian, Moen, Inc.
R. E. Pamplona, U.S. Naval Naval Construction Battalion Center
S. Rawalpindiwala, IAPMO
S. Remedios, Delta Faucet Co.
J. A. Sargent, Kohler Co.
D. W. Viola, BOCA International
R. E. White, Richard E. White & Associates
W. C. Whitehead, Plumbing and Drainage Institute

PERSONNEL OF PANEL 6 — DRAINAGE PRODUCTS

S. J. McDanal, *Chair,* Jay R. Smith Manufacturing Co.
R. H. Ackroyd, *Vice Chair,* Watts Regulator Co.
P. J. Higgins, *Secretary,* PJ Higgins & Associates, Inc.
J. A. Ballanco, JB Engineering & Code Consulting
A. R. Becker, Zurn Industries, Inc.
A. Cohen, Copper Development Association, Inc.
G. J. Flegel, Flegel Consulting Services
M. W. Marshall, Tyler Pipe
S. Rawalpindiwala, IAPMO
J. A. Sargent, Kohler Co.
G. E. Shillington, Briggs Industries, Inc.
R. C. Smith, United States Testing Co., Inc.
W. M. Smith, Jay R. Smith Manufacturing Co.
D. W. Viola, BOCA International

Copyright ASME International
Provided by IHS under license with ASME
No reproduction or networking permitted without license from IHS
Not for Resale

R. E. White, Richard E. White & Associates
W. C. Whitehead, Plumbing and Drainage Institute

PERSONNEL OF WORKING GROUP 1 — CARRIERS AND SUPPORTS FOR PUBLIC USE

S. J. McDanal, *Chair,* Jay R. Smith Manufacturing Co.
R. H. Ackroyd, *Vice Chair,* Watts Regulator Co.
P. J. Higgins, *Secretary,* PJ Higgins & Associates, Inc.
J. A. Ballanco, JB Engineering & Code Consulting
A. R. Becker, Zurn Industries, Inc.
P. V. DeMarco, American Standard, Inc.
J. A. Sargent, Kohler Co.
R. C. Smith, United States Testing Co., Inc.
D. W. Viola, BOCA International
R. E. White, Richard E. White & Associates
W. C. Whitehead, Plumbing and Drainage Institute

Copyright ASME International
Provided by IHS under license with ASME
No reproduction or networking permitted without license from IHS
Not for Resale

CONTENTS

Foreword iii
Committee Roster v

1 Scope 1

2 Purpose 1

3 Reference Standards 1

4 Definitions 1
4.1 Fixture Support (Carrier) — General Description 1
4.2 Fixture Support (Carrier) — Specific Components 1

5 Materials and Finishes 2
5.1 Materials 2
5.2 Finishes 2

6 Off-the-Floor Water Closet Supports 3
6.1 General Requirements 3
6.2 Waste Fittings 3
6.3 Faceplates 3
6.4 Feet 3

7 Off-the-Floor Urinal Supports 4
7.1 General Requirements 4
7.2 Urinal Carrier Types 4

8 Off-the-Floor Lavatory Supports 4
8.1 General Requirements 4
8.2 Lavatory Carrier Types 4

9 Off-the-Floor Sink Supports 5
9.1 General Requirements 5
9.2 Sink Carrier Types 5

10 Off-the-Floor Electric Water Cooler Supports 5
10.1 General Requirements 5
10.2 Water Cooler Carrier Types 6

11 Strength and Deflection 6
11.1 General Requirements 6
11.2 Test Specification 6

Copyright ASME International
Provided by IHS under license with ASME
No reproduction or networking permitted without license from IHS
Not for Resale

12 Installation Instructions 6

13 Markings 6

Figures

1 Typical Off-the-Floor Water Closet Support With Single Horizontal Vertically Adjustable Fitting 7
2 Typical Off-the-Floor Water Closet Support With Double Horizontal Vertically Adjustable Fitting 8
3 Typical Off-the-Floor Water Closet Support With Single Vertical Adjustable Fitting 9
4 Typical Off-the-Floor Water Closet Support With Double Vertical Fixed Fitting 10
5 Type I Urinal Carrier 11
6 Type II Urinal Carrier 12
7 Type I Lavatory Carrier 13
8 Type II Lavatory Carrier 14
9 Type III Lavatory Carrier 15
10 Type I Sink Carrier 16
11 Type II Sink Carrier 17
12 Type III Sink Carrier 18
13 Type IV Sink Carrier 19
14 Type I Water Cooler Carrier 20
15 Type II Water Cooler Carrier 21
16 Schematic Arrangement of Test Setup Applicable to All Support (Carrier) Types Covered by This Standard 22

Tables

1 Chromium Plating 3
2 Strength and Deflection Test Criteria for Fixture Supports (Carriers) Covered by This Standard 23

Copyright ASME International
Provided by IHS under license with ASME
No reproduction or networking permitted without license from IHS
Not for Resale

FLOOR-AFFIXED SUPPORTS FOR OFF-THE-FLOOR PLUMBING FIXTURES FOR PUBLIC USE

1 SCOPE

This Standard applies to floor-affixed supports for off-the-floor plumbing fixtures, including combination carriers and waste fittings for water closets, and carriers for urinals, lavatories, sinks, and water coolers.

This Standard covers definitions, materials and finishes, general requirements, strength and deflection requirements, and details of the various types of supports included herein.

2 PURPOSE

The purpose of this Standard is to provide all interested persons, including manufacturers, plumbing code authorities, and others with the minimum design and quality criteria for floor-affixed supports (carriers) for off-the-floor plumbing fixtures. This Standard is not intended as a specification guide. Figures used herein are intended only to describe and portray typical carrier types and are not intended to restrict design or to be used for specification purposes.

3 REFERENCE STANDARDS

The following standards are referenced in this document. Unless otherwise specified, the latest edition of each standard shall apply.

ASTM A 48, Specification for Gray Iron Castings
ASTM A 307, Specification for Carbon Steel Bolts and Studs
ASTM A 563, Specification for Carbon and Alloy Steel Nuts
ASTM B 85, Specification for Aluminum-Alloy Die Castings
ASTM B 86, Specification for Zinc-Alloy Die Castings
ASTM B 584, Specification for Copper-Alloy Sand Castings for General Applications

Publisher: American Society for Testing and Materials, 100 Barr Harbor Drive, West Conshohocken, PA 19428

4 DEFINITIONS

4.1 Fixture Support (Carrier) — General Description

As covered in this Standard, a fixture support (carrier) is a device that is anchored to the floor and concealed in the building construction (i.e., pipe chase), designed to support off-the-floor plumbing fixtures (any sanitary plumbing fixture, located adjacent to the wall, which has no visible contact with the floor in front of the wall) independent of the wall or partition. In addition, combination carriers for off-the-floor water closets include waste fittings to convey fixture discharge to the sanitary drainage system.

4.2 Fixture Support (Carrier) — Specific Components

alignment truss: the structural member of a carrier designed to maintain proper spacing of other carrier components, usually the uprights. Sometimes called "tie rod."

anchor studs: the studs attached to the bearing plate for bottom anchoring of some types of fixtures.

bearing plate: a plate attached to the uprights with provisions for bearing or anchor studs.

bearing studs: the studs attached to the bearing plate to hold the fixture off the wall.

concealed arm: the fixture support member that extends horizontally from the upper end of a lavatory carrier upright and is concealed in the fixture.

coupling: the component that compresses the fixture gasket and provides the conduit for waste between the fixture and carrier faceplate. Sometimes called "extension."

exposed arm: the fixture support member that extends horizontally from the upper end of a lavatory (or sink) carrier upright, on which the fixture rests, and is fully or partially exposed to view.

Copyright ASME International
Provided by IHS under license with ASME
No reproduction or networking permitted without license from IHS
Not for Resale

STD.ASME A112.6.1M-ENGL 1997 ■ 0759670 0588031 719 ■

faceplate: the part of a water closet carrier that holds the fixture bolts; or, in a combination water closet support and fitting, seals the fitting branch opening. In the combination support and fitting, the faceplate shall also be designed to carry the fixture bolts and seal the branch opening.

fitting: the sanitary waste fitting component of a combination water closet support and fitting.

fixture bolts: the stud members on which the fixture is mounted. Sometimes called "mounting studs."

foot: a member of a carrier, which rests on the floor or slab in a concealed location, that anchors and supports the assembly.

gasket, closet: see *gasket, fixture.*

gasket, faceplate: the sealing element between faceplate and fitting.

gasket, fixture: the sealing element between fixture and coupling.

hanger plate: a plate attached to the upper ends of the uprights with provisions for mounting the hanger(s) furnished with the fixture.

header: the component of a carrier that ties the arm or other fixture support to the upright.

leveling screws: the screws located in a carrier arm that bear on the fixture to level it in relation to the floor.

locking device: a device that secures a lavatory or sink to a carrier arm.

support plate: a plate attached to the uprights with provisions for fixture bolts.

upright: the vertical structural member of a carrier which joins the foot with other components to support the fixture.

5 MATERIALS AND FINISHES

5.1 Materials

The items covered in this Standard shall be of materials that meet all applicable requirements and standards specified herein. It is not the intent of this Standard to limit acceptable materials to those included in this Section. Other materials of equivalent performance shall be permitted.

All castings shall be sound, free of blow holes (holes in casting due to air or gas in the metal or mold), cold shuts (casting defects formed when two streams of metal become so cold they do not fuse upon meeting, i.e., incomplete casting), and other imperfections adversely affecting casting quality, and shall be of uniform wall thickness and true to pattern. They shall also be clean and free of fins (projections on castings due to imperfect joints).

5.1.1 Cast Iron. Castings shall conform to ASTM A 48, Class 25.

5.1.2 Bronze Castings. Castings shall conform to ASTM B 584, and shall be copper alloys C83600, C83800, or C84400.

5.1.3 Bolting Materials — Steel. The materials for studs, nuts, cap screws, and other steel fasteners shall at least equal the requirements of ASTM A 307, Grade A, and ASTM A 563, Grade A. Threads shall be class 2A and 2B. Fasteners shall be plated.

5.1.4 Aluminum Die Castings. Die cast aluminum-alloy parts shall conform to ASTM B 85, Alloy G8A (Aluminum Alloy 218).

5.1.5 Zinc Die Castings. Die cast zinc-alloy parts shall conform to ASTM B 86, Alloy AG40A.

5.1.6 Steel Pipe — Structural. Tubular structural members shall be schedule 40 steel pipe, structural grade, or the equivalent in load bearing properties.

5.1.7 Steel Plates. Steel plates shall be hot rolled carbon steel.

5.2 Finishes

All parts that are to be coated or plated shall be treated and cleaned as required to provide proper bonding of the finish. It is not the intent of this Standard to limit acceptable finishes to those included herein. The use of other finishes of comparable performance shall be permitted.

5.2.1 Bronze Chromate. After preplating cleaning, parts shall be given a commercial grade cadmium plating followed by a commercial grade bronze chromate treatment.

5.2.2 Cadmium Plate. After preplating cleaning, parts shall be given a commercial grade cadmium plating.

5.2.3 Chromium Plate. After preplating cleaning, parts shall be given a commercial grade chromium plating in accordance with Table 1.

Copyright ASME International
Provided by IHS under license with ASME
No reproduction or networking permitted without license from IHS
Not for Resale

TABLE 1 CHROMIUM PLATING

Metal and Finish	Minimum Thickness of Significant Surfaces	
	mm	in.
Chromium Plating on Brass	...	...
Copper (optional, not required)	...	...
Nickel	0.003	0.00010
Chromium	0.0003	0.00001
Chromium Plating on Zinc Alloy	...	...
Die Castings	...	...
Copper	0.005	0.00020
Nickel (Final Nickel Coating)	0.007	0.00030
Nickel Plus Copper, Total	0.009	0.00035

5.2.4 Paint Coatings. Parts shall be cleaned and coated with a paint, lacquer, or synthetic coating in accordance with manufacturer's specifications.

5.2.5 Powder Coatings. Parts shall be cleaned, preheated, coated to a thickness of 10-30 mils nominal, and post-cured in accordance with manufacturer's specifications.

5.2.6 Porcelain Enameled Coatings. Parts shall be annealed, sandblasted, and porcelain enameled with both a ground coat and finish in accordance with manufacturer's specifications.

5.2.7 Zinc Plate. After preplating cleaning, parts shall be given a commercial grade zinc plating in accordance with manufacturer's specifications.

6 OFF-THE-FLOOR WATER CLOSET SUPPORTS

6.1 General Requirements

Supports for off-the-floor water closets shall be combination support (carrier) and waste fitting assemblies. They shall incorporate, as a minimum, a support structure complete with hardware to mount and connect the water closet, fitting and conduit means for conveying the water closet discharge into the sanitary drain line, means to anchor the assembly to the structural floor slab, and any necessary gasketing. The carrier-fitting combination shall be an assembly that (a) will support the fixture independent of the wall or partition, (b) can be fully concealed in the building construction, and (c) meets the strength and deflection requirements specified in Section 11. Materials and finishes shall be in accordance with the applicable paragraphs of Section 5.

6.1.1 Typical combination supports in general use which meet these requirements consist of a sanitary drainage fitting, a cast iron vertical support member(s), an inlet coupling, gaskets, and assembly hardware and trim with feet for anchoring to the floor slab. See Figs. 1 through 4. Two classes of combination supports are available, one with fitting vertically adjustable, and the other with fitting fixed in relation to fixture elevation.

6.1.2 It shall not be the intent of this Standard to restrict acceptable combination supports to those described in para. 6.1.1. Alternate types of supports shall be permitted provided they meet the general requirements of para. 6.1.

6.2 Waste Fittings

Waste fittings shall be of sanitary drainage design with no protuberances or other irregularities in the flow passageways that could cause a build-up of solids, stoppage, or restriction to the flow of waste material. Changes in direction shall be designed to channel flow into the waste line with minimal turbulence in keeping with drainage, waste, and vent (DWV) fitting practice. All flow passageways shall pass a ball of 54 mm ($2\frac{1}{8}$ in.) minimum diameter through the connected fixture. Vent connections shall be provided for each fixture branch. A common vent shall be permitted for back-to-back fittings provided the vent opening communicates with each fixture branch.

Waste and vent connections and dimensions shall conform to the specifications of the piping system for which the fitting is intended.

6.3 Faceplates

Faceplates shall have the necessary strength and rigidity in assembly to meet the requirements of para. 6.1. On vertically adjustable assemblies, the faceplate shall have a watertight seal at its joint with the fitting to withstand a hydrostatic pressure test of 207 kPa (30 psig).

6.4 Feet

Each fixture support member (carrier) shall be equipped with vertically adjustable feet that extend between the support member and the floor slab or other base structure. They shall be securely attached to the support member and be of sufficient rigidity in assembly

Copyright ASME International
Provided by IHS under license with ASME
No reproduction or networking permitted without license from IHS
Not for Resale

STD.ASME A112.6.1M-ENGL 1997 ■ 0759670 0588033 591 ■

to meet the requirements of para. 6.1. Feet shall have provisions for anchoring the support (carrier) assembly to the floor slab.

7 OFF-THE-FLOOR URINAL SUPPORTS

7.1 General Requirements

Supports for off-the-floor urinals shall provide the necessary means for mounting and securing the fixture, a foot or feet to anchor the assembly to the floor slab, adjustability to locate the fixture at the desired height and in relation to the wall, and support for the fixture under normal usage without imposing damaging stress on the wall structure or wall finish. Supports (carriers) shall meet the strength and deflection requirements specified in Section 11. Materials and finishes shall be in accordance with the applicable paragraphs of Section 5.

7.2 Urinal Carrier Types

Two types of supports shall be considered with selection depending on the type of fixture to be supported.

(a) Type I supports (carriers) with a horizontally adjustable coupling to receive fixture discharge and connect to the sanitary drainage system

(b) Type II supports (carriers) without provisions for connecting the fixture to the sanitary drainage system

7.2.1 Type I Urinal Carrier. Supports shall incorporate a fixture support plate(s), a horizontally adjustable coupling with sealing means, a fixture gasket, assembly hardware, uprights with feet or an adjustable foot for anchoring to the floor slab, and means to provide for vertical adjustment and securing of the assembly. See Fig. 5. The support (carrier) shall meet the requirements of para. 7.1.

7.2.2 Type II Urinal Carrier. Supports shall incorporate two uprights with feet for anchoring to the floor slab, an alignment truss (depending on design) to maintain lateral spacing of uprights, a hanger or support plate with provisions for mounting the fixture hangers and/or fixture bolts, two vertically adjustable headers or the equivalent for securing the plate to the uprights, and assembly hardware. In addition, some Type II supports shall include bearing studs, to hold the lower end of the fixture off the wall, which are secured to a bearing plate. See Fig. 6. The support (carrier) shall meet the requirements of para. 7.1.

8 OFF-THE-FLOOR LAVATORY SUPPORTS

8.1 General Requirements

Supports for off-the-floor lavatories shall provide the necessary means for mounting and securing the fixture, feet to anchor the assembly to the floor slab, adjustability to locate the fixture at the desired height and in relation to the wall, and support for the fixture under normal usage without imposing damaging stress on the wall structure or wall finish. Supports (carriers) shall meet the strength and deflection requirements specified in Section 11. Materials and finishes shall be in accordance with the applicable paragraphs of Section 5.

8.2 Lavatory Carrier Types

Three types of supports shall be considered with selection depending on the type of fixture and mounting specified.

(a) Type I — exposed arm carrier
(b) Type II — concealed arm carrier
(c) Type III — hanger-type carrier

8.2.1 Type I Lavatory Carrier. Supports shall incorporate two uprights with feet for anchoring to the floor slab, vertically adjustable headers at the upper ends of the uprights to support the arms with provision to adjust them laterally in relation to the wall surface, enameled exposed arms to support the fixture from the underside, alignment truss or trusses to maintain lateral spacing of uprights, means to level and secure the fixture on the arms, and assembly hardware. See Fig. 7. The support (carrier) shall meet the requirements of para. 8.1.

8.2.2 Type II Lavatory Carrier. Supports shall be the same as Type I except in place of enameled exposed arms, the arms shall be the concealed type with leveling and securing means within the fixture. When used to support slab-type lavatories located away from the wall, escutcheons shall be provided to fill the gap between the back of the fixture and the wall to conceal the otherwise exposed parts of the carrier. See Fig. 8. The support (carrier) shall meet the requirements of para. 8.1.

8.2.3 Type III Lavatory Carrier. Supports shall incorporate two uprights with feet for anchoring to the floor slab, alignment truss (depending on design) to maintain lateral spacing of the uprights, a hanger plate with provisions for mounting the fixture hanger(s), two vertically adjustable headers or the equivalent for securing the plate to the uprights, and assembly hard-

Copyright ASME International
Provided by IHS under license with ASME
No reproduction or networking permitted without license from IHS
Not for Resale

ware. In addition, some Type III supports shall include anchor studs, to anchor the lower end of the fixture, which are secured to either an extension of the hanger plate or to a bearing plate. See Fig. 9. The support (carrier) shall meet the requirements of para. 8.1.

9 OFF-THE-FLOOR SINK SUPPORTS

9.1 General Requirements

Supports for off-the-floor sinks shall provide the necessary means for mounting and securing the fixture, feet to anchor the assembly to the floor slab, adjustability to locate the fixture at the desired height and in relation to the wall, and support for the fixture under normal usage without imposing damaging stress on the wall structure or wall finish. Supports (carriers) shall meet the strength and deflection requirements specified in Section 11. Materials and finishes shall be in accordance with the applicable paragraphs of Section 5.

9.2 Sink Carrier Types

Four types of supports shall be considered with selection depending on the type of fixture and mounting specified.

(a) Type I — exposed arm carrier

(b) Type II — hanger-type carrier

(c) Type III — combination exposed arm and hanger-type carrier

(d) Type IV — support plate-type carrier

9.2.1 Type I Sink Carrier. Supports shall incorporate two or more uprights with feet for anchoring to the floor slab, vertically adjustable headers at the upper ends of the uprights to support the arms with provision to adjust them laterally in relation to the wall surface, enameled exposed arms to support the fixture from the underside, alignment truss or trusses to maintain lateral spacing of uprights, means to level and secure the fixture on the arms, and assembly hardware. See Fig. 10. The support (carrier) shall meet the requirements of para. 9.1.

9.2.2 Type II Sink Carrier. Supports shall incorporate two or more uprights with feet for anchoring to the floor slab, alignment truss (depending on design) to maintain lateral spacing of uprights, a hanger plate with provisions for mounting the fixture hanger(s), a vertically adjustable header or the equivalent on each upright for securing the plate to the uprights, and assembly hardware. In addition, some Type II supports shall include bearing studs, to hold the lower end of the fixture off the wall, which are normally secured to the uprights with headers or the equivalent. See Fig. 11. The support (carrier) shall meet the requirements of para. 9.1.

9.2.3 Type III Sink Carrier. Supports shall incorporate two or more uprights with feet for anchoring to the floor slab, alignment truss (depending on design) to maintain lateral spacing of uprights, a hanger plate with provisions for mounting the fixture hanger(s), a vertically adjustable header or the equivalent on each upright for securing the plate to the uprights, a second vertically adjustable header on each upright to support the arms with provisions to adjust them and the hanger(s) laterally in relation to the wall surface, enameled exposed arms to support the fixture from the underside, and assembly hardware. See Fig. 12. The support (carrier) shall meet the requirements of para. 9.1.

9.2.4 Type IV Sink Carrier. Supports shall incorporate two uprights with feet for anchoring to the floor slab, vertically adjustable headers or the equivalent on each upright for securing the support plates to the upright, fixture support plates, a horizontally adjustable coupling with sealing means and with or without drainage fitting (depending on design), a fixture gasket, and assembly hardware. See Fig. 13. The support (carrier) shall meet the requirements of para. 9.1.

10 OFF-THE-FLOOR ELECTRIC WATER COOLER SUPPORTS

10.1 General Requirements

Supports for off-the-floor electric water coolers (and drinking fountains) shall provide the necessary means for mounting and securing the fixture, feet to anchor the assembly to the floor slab, adjustability to locate the fixture at the desired height and in relation to the wall, and support for the fixture under normal usage without imposing damaging stress on the wall structure or wall finish. Supports (carriers) shall meet the strength and deflection requirements specified in Section 11. Materials and finishes shall be in accordance with the applicable paragraphs of Section 5.

Copyright ASME International
Provided by IHS under license with ASME
No reproduction or networking permitted without license from IHS
Not for Resale

10.2 Water Cooler Carrier Types

Two types of supports shall be considered with selection depending on the type of fixture(s) and mounting specified.

(a) Type I — hanger-type carrier

(b) Type II — bi-level cooler hanger-type carrier

10.2.1 Type I Water Cooler Carrier. Supports shall incorporate two uprights with feet for anchoring to the floor slab, alignment truss (depending on design) to maintain lateral spacing of the uprights, a hanger plate with provisions for mounting the fixture hanger, two vertically adjustable headers or the equivalent for securing the plate to the uprights, and assembly hardware. In addition, some Type I supports shall include anchor studs, to anchor the lower end of the fixture, which are secured to a bearing plate. See Fig. 14. The support (carrier) shall meet the requirements of para. 10.1.

10.2.2 Type II Water Cooler Carrier. Supports shall incorporate three uprights with feet for anchoring to the floor slab, alignment truss (depending on design) to maintain lateral spacing of the uprights, hanger plates with provisions for mounting the fixture hangers, vertically adjustable headers or the equivalent for securing the plates to the uprights, and assembly hardware. In addition, some Type II supports shall include anchor studs, to anchor the lower end of the fixture, which are secured to a bearing plate. See Fig. 15. The support (carrier) shall meet the requirements of para. 10.1.

11 STRENGTH AND DEFLECTION

11.1 General Requirements

All supports (carriers) within the scope of this Standard shall be designed and built to meet or exceed the applicable strength and deflection criteria specified in this Section. All data necessary for performance testing and verification in conformance to specification, para. 11.2, are provided in Fig. 16 and Table 2.

11.2 Test Specification

When installed in accordance with manufacturer's instructions in test setup (see Fig. 16), using the dimensional and loading data given in Table 2 for the applicable requirements paragraph, the support (carrier) assembly shall withstand the test at maximum static loading without failure, permanent distortion, or deflection in excess of that specified in Table 2.

12 INSTALLATION INSTRUCTIONS

Instructions shall be provided with the product to identify the proper installation of the support or carrier consistent with the loading requirements.

13 MARKINGS

Supports and carriers shall be marked with the manufacturer's name or trademark.

Copyright ASME International
Provided by IHS under license with ASME
No reproduction or networking permitted without license from IHS

Not for Resale

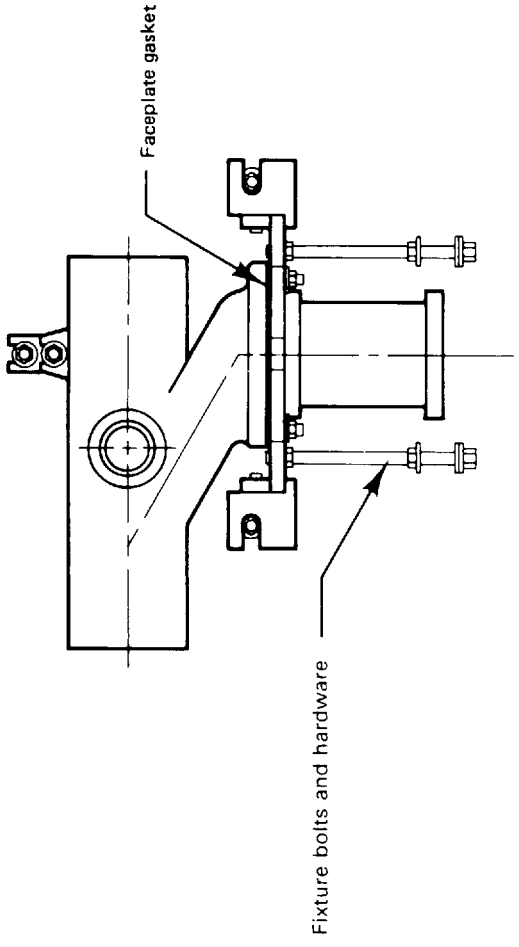

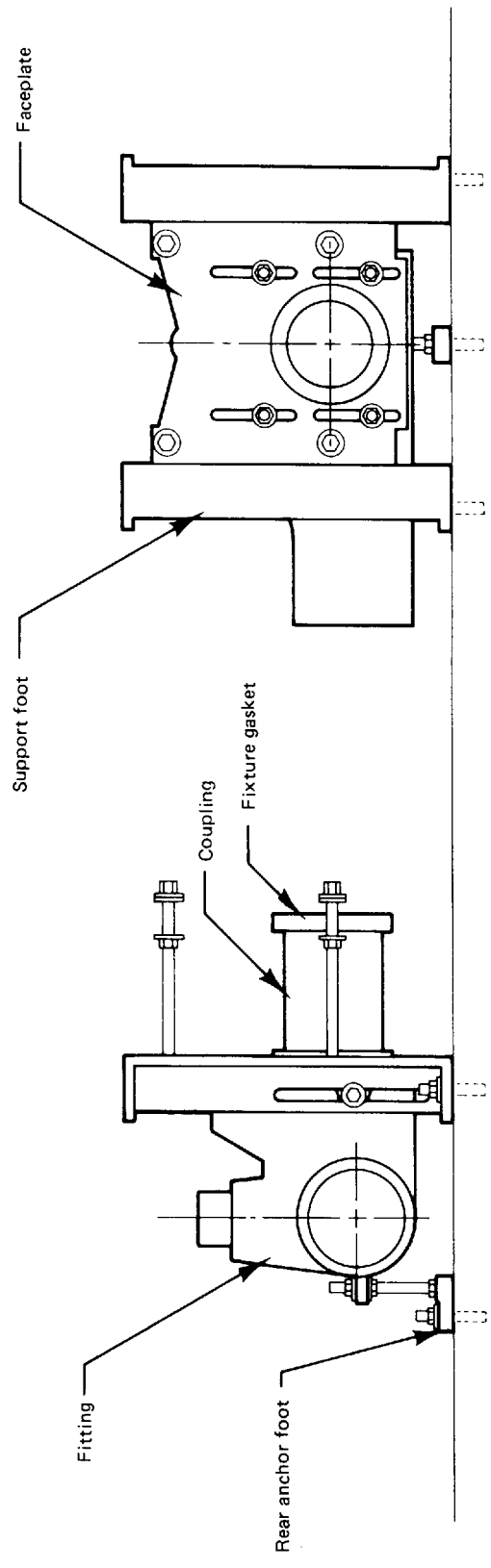

FIG. 1 TYPICAL OFF-THE-FLOOR WATER CLOSET SUPPORT WITH SINGLE HORIZONTAL VERTICALLY ADJUSTABLE FITTING

Copyright ASME International
Provided by IHS under license with ASME
No reproduction or networking permitted without license from IHS

Not for Resale

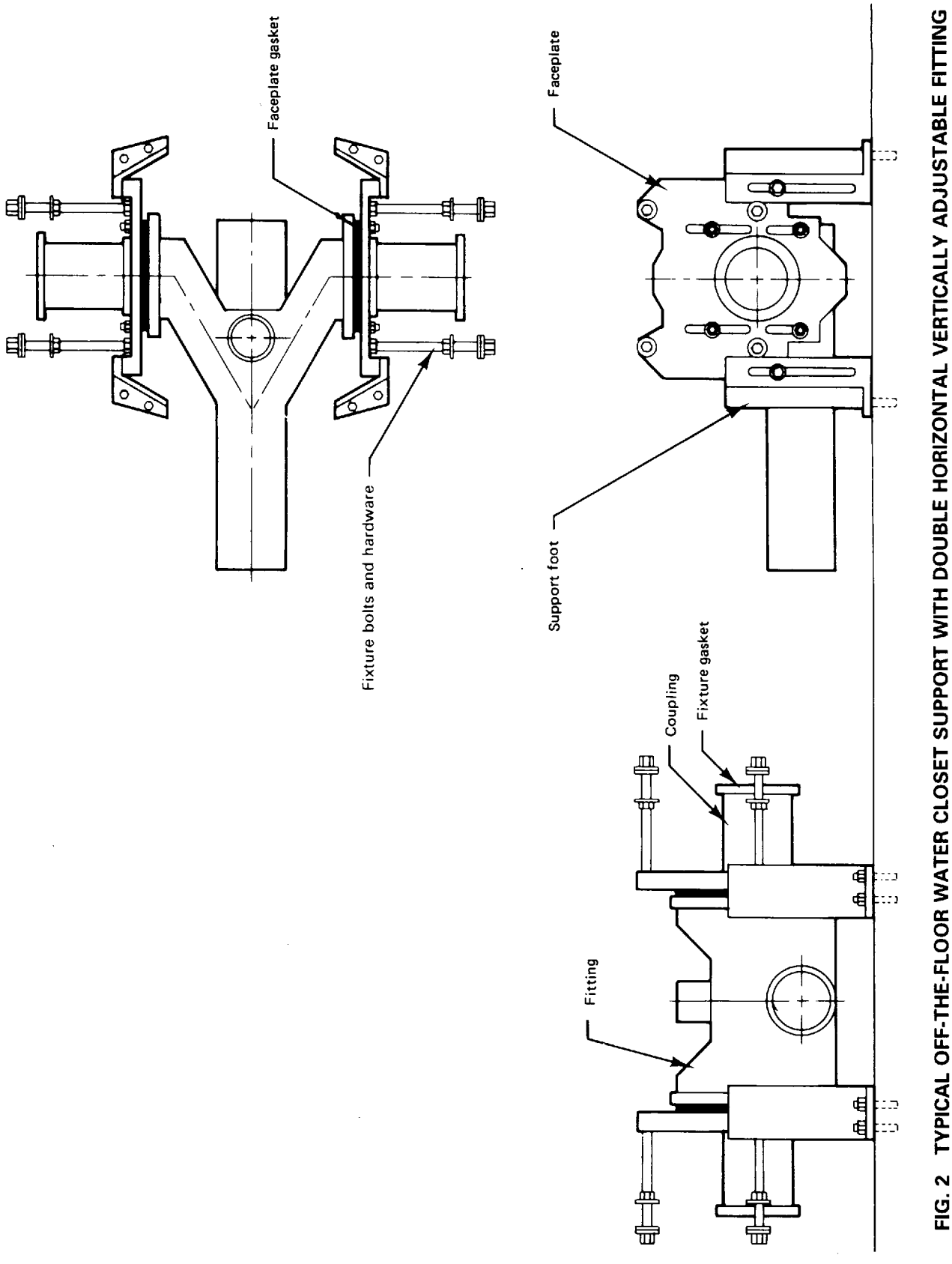

FIG. 2 TYPICAL OFF-THE-FLOOR WATER CLOSET SUPPORT WITH DOUBLE HORIZONTAL VERTICALLY ADJUSTABLE FITTING

Copyright ASME International
Provided by IHS under license with ASME
No reproduction or networking permitted without license from IHS

Not for Resale

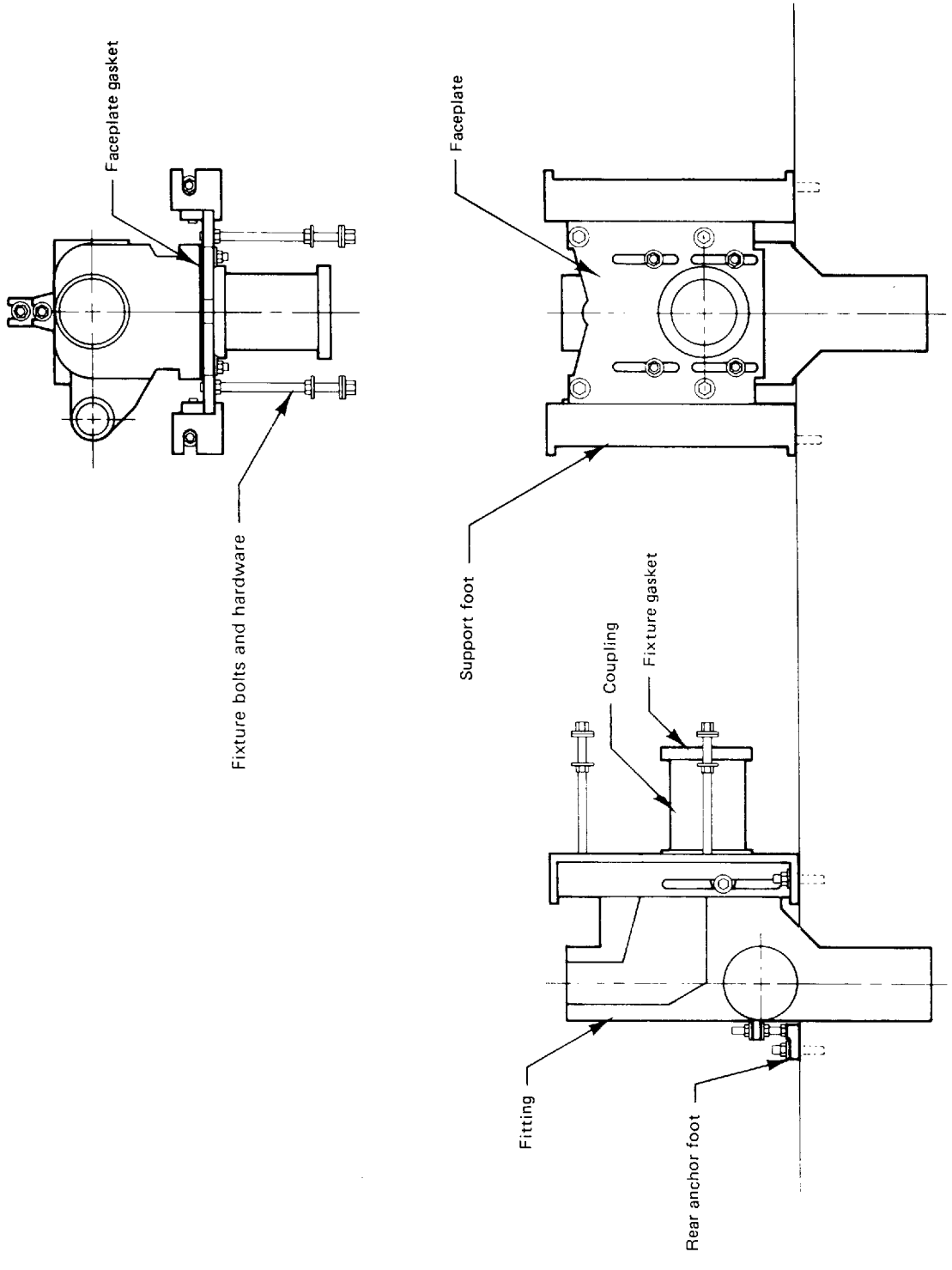

FIG. 3 TYPICAL OFF-THE-FLOOR WATER CLOSET SUPPORT WITH SINGLE VERTICAL ADJUSTABLE FITTING

Copyright ASME International
Provided by IHS under license with ASME
No reproduction or networking permitted without license from IHS

Not for Resale

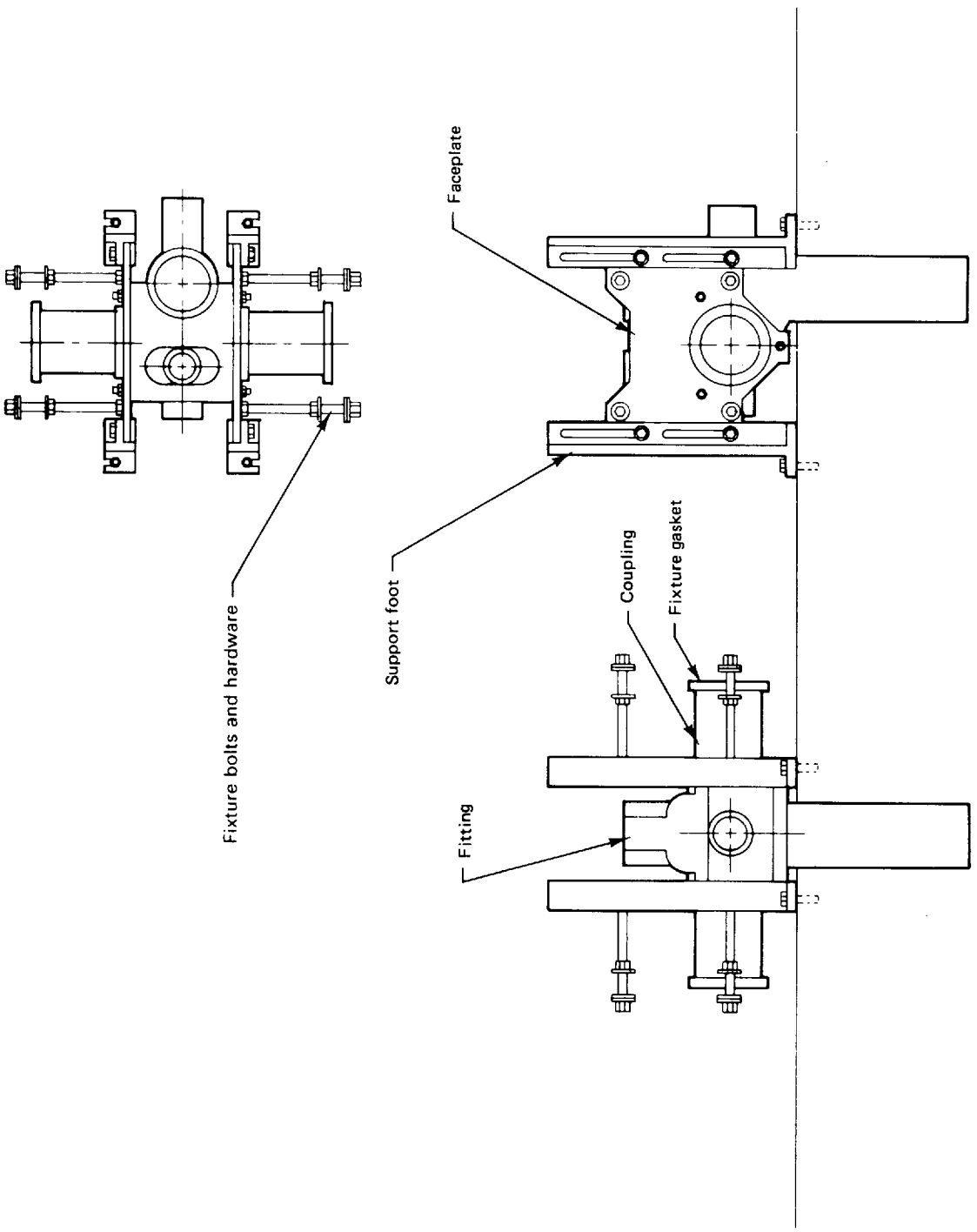

FIG. 4 TYPICAL OFF-THE-FLOOR WATER CLOSET SUPPORT WITH DOUBLE VERTICAL FIXED FITTING

Copyright ASME International
Provided by IHS under license with ASME
No reproduction or networking permitted without license from IHS

Not for Resale

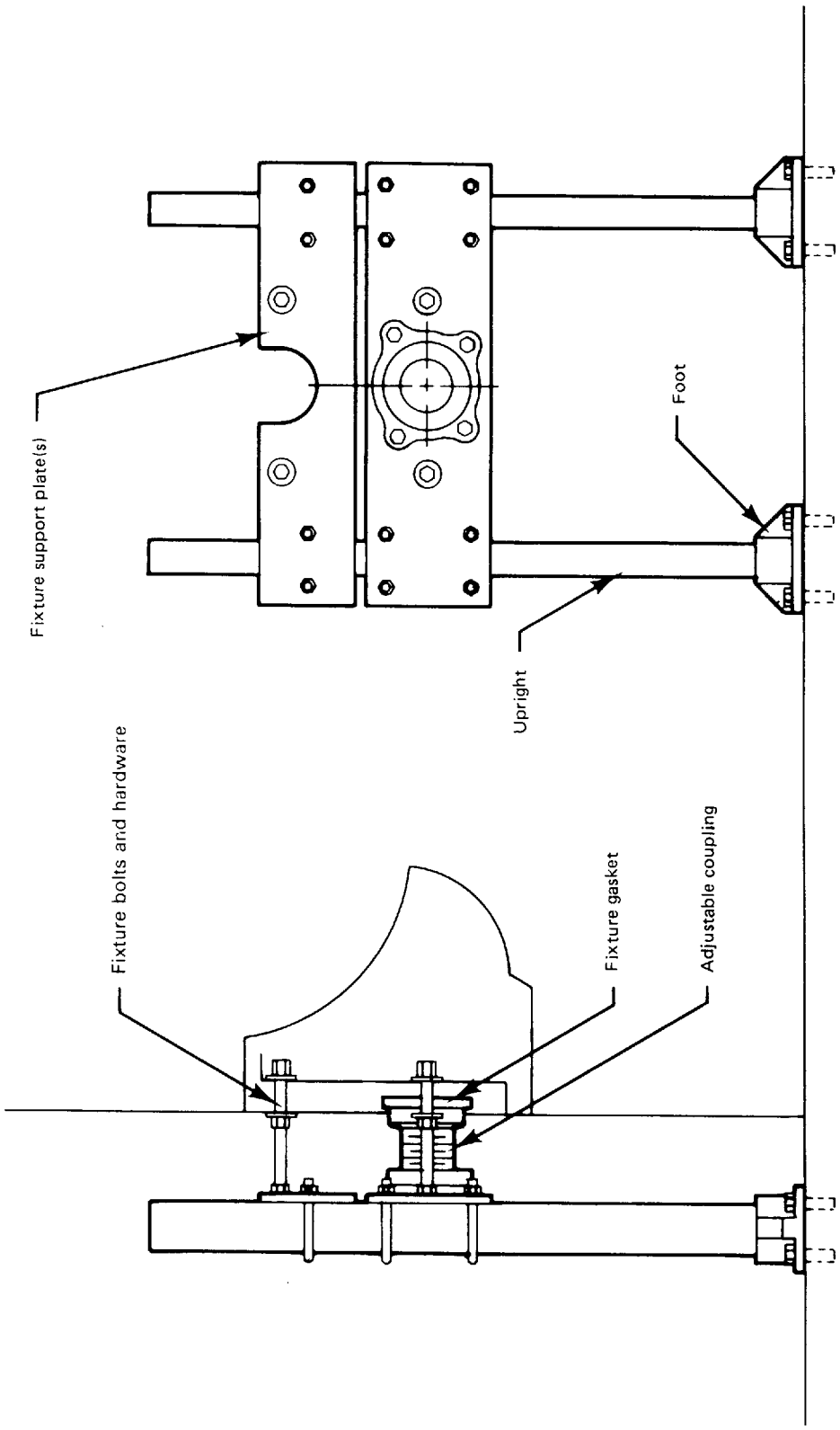

FIG. 5 TYPE I URINAL CARRIER

Copyright ASME International
Provided by IHS under license with ASME
No reproduction or networking permitted without license from IHS

Not for Resale

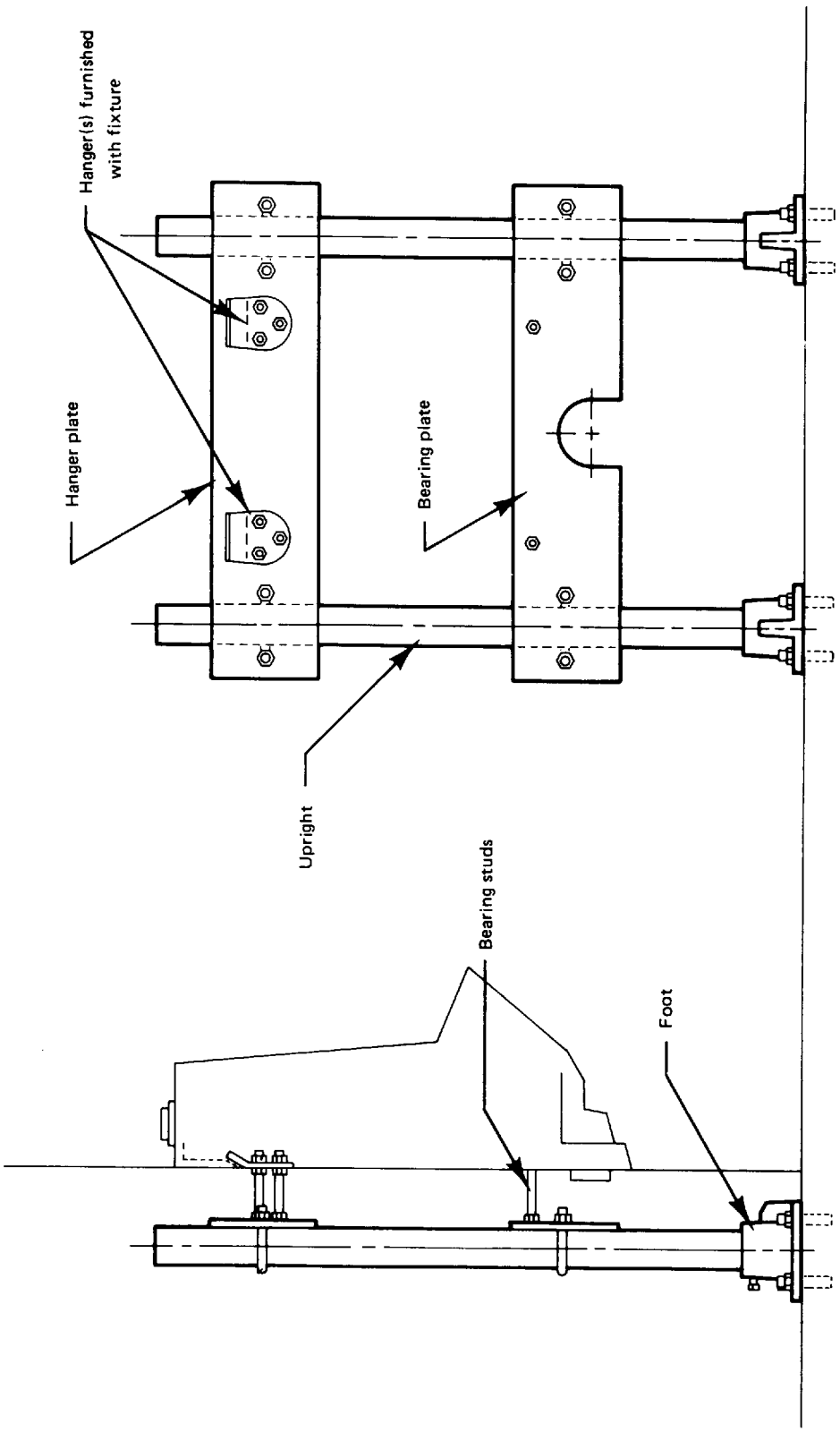

FIG. 6 TYPE II URINAL CARRIER

Copyright ASME International
Provided by IHS under license with ASME
No reproduction or networking permitted without license from IHS

Not for Resale

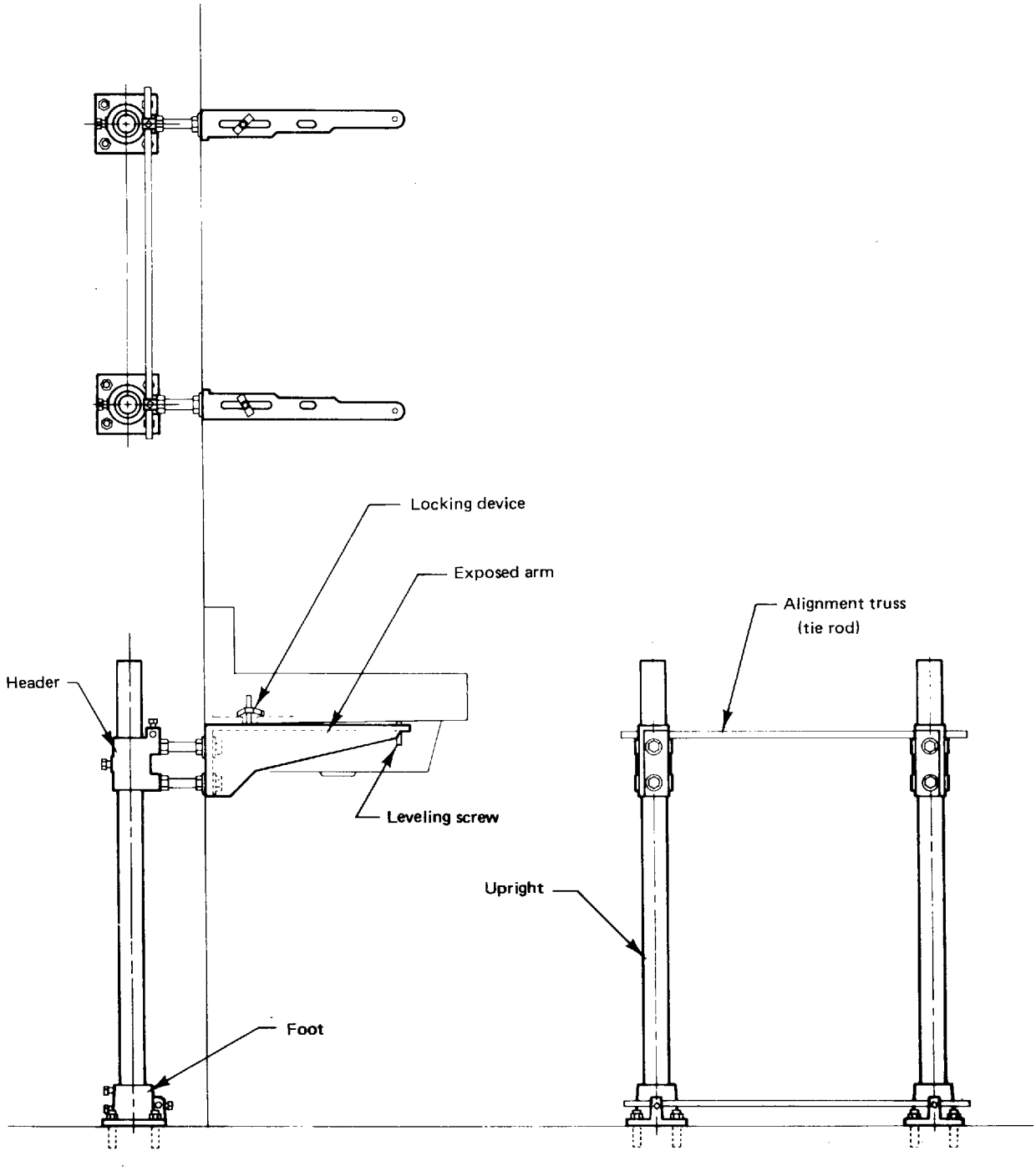

FIG. 7 TYPE I LAVATORY CARRIER

Copyright ASME International
Provided by IHS under license with ASME
No reproduction or networking permitted without license from IHS

Not for Resale

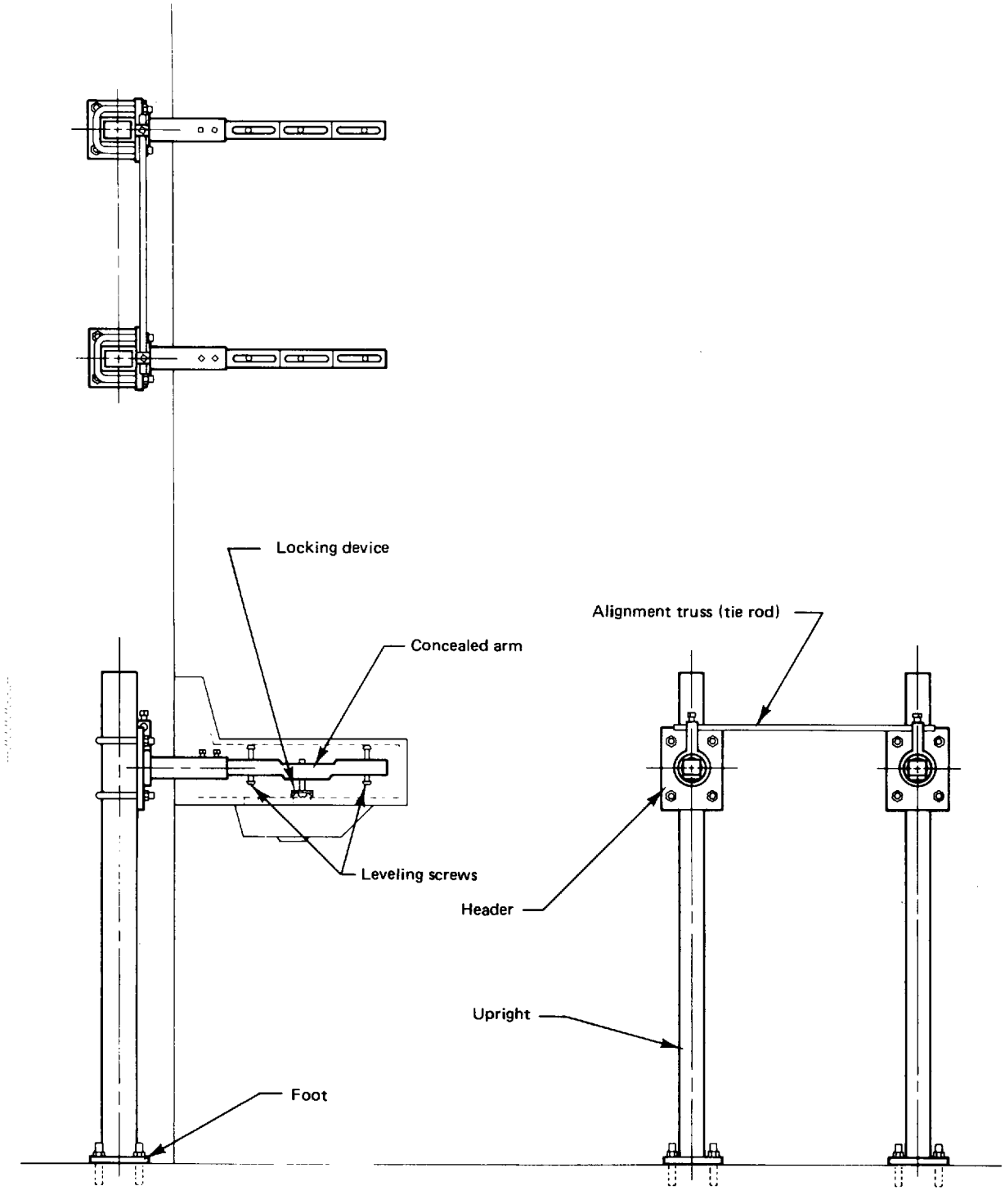

FIG. 8 TYPE II LAVATORY CARRIER

Copyright ASME International
Provided by IHS under license with ASME
No reproduction or networking permitted without license from IHS

Not for Resale

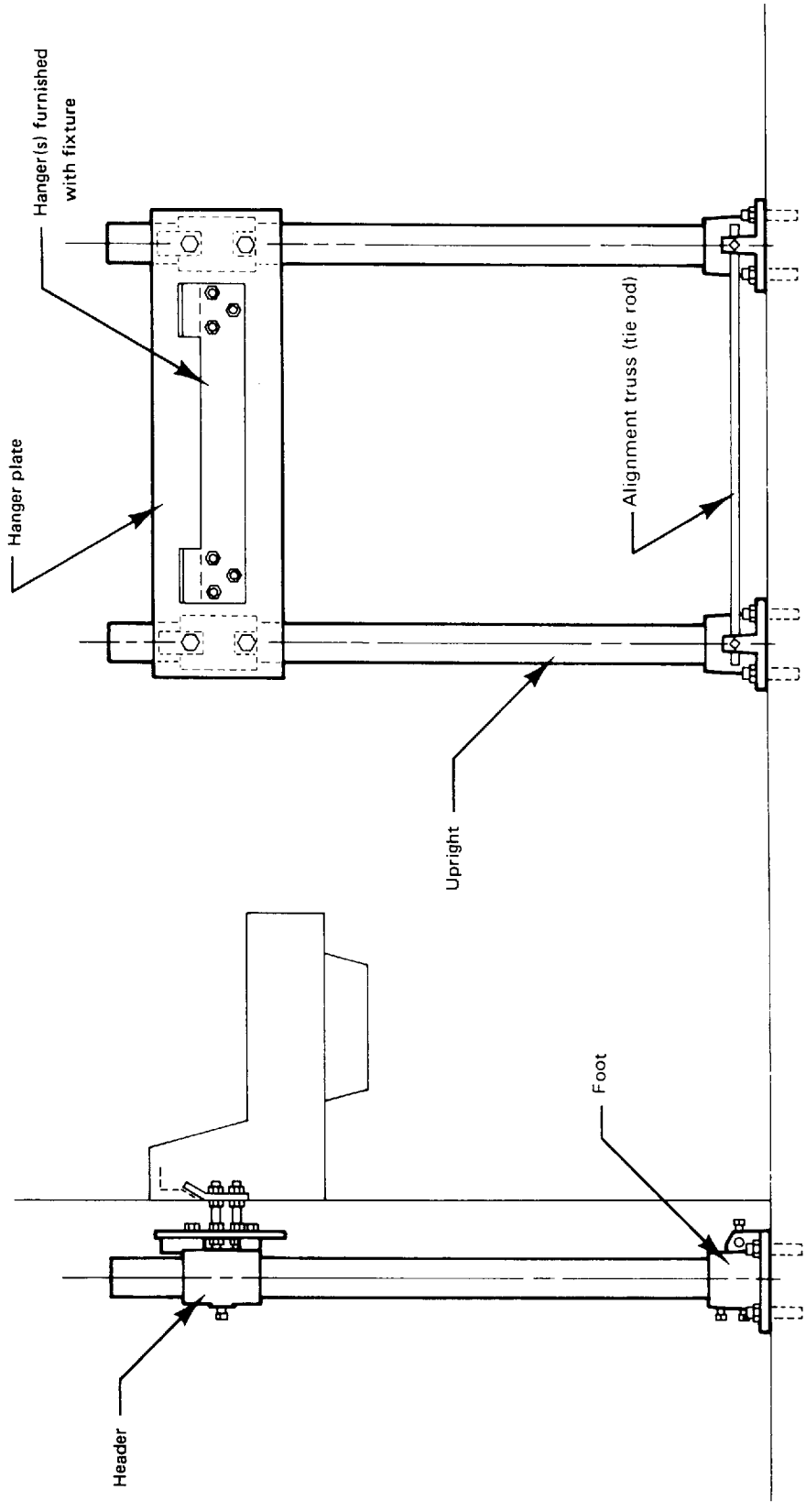

FIG. 9 TYPE III LAVATORY CARRIER

Copyright ASME International
Provided by IHS under license with ASME
No reproduction or networking permitted without license from IHS

Not for Resale

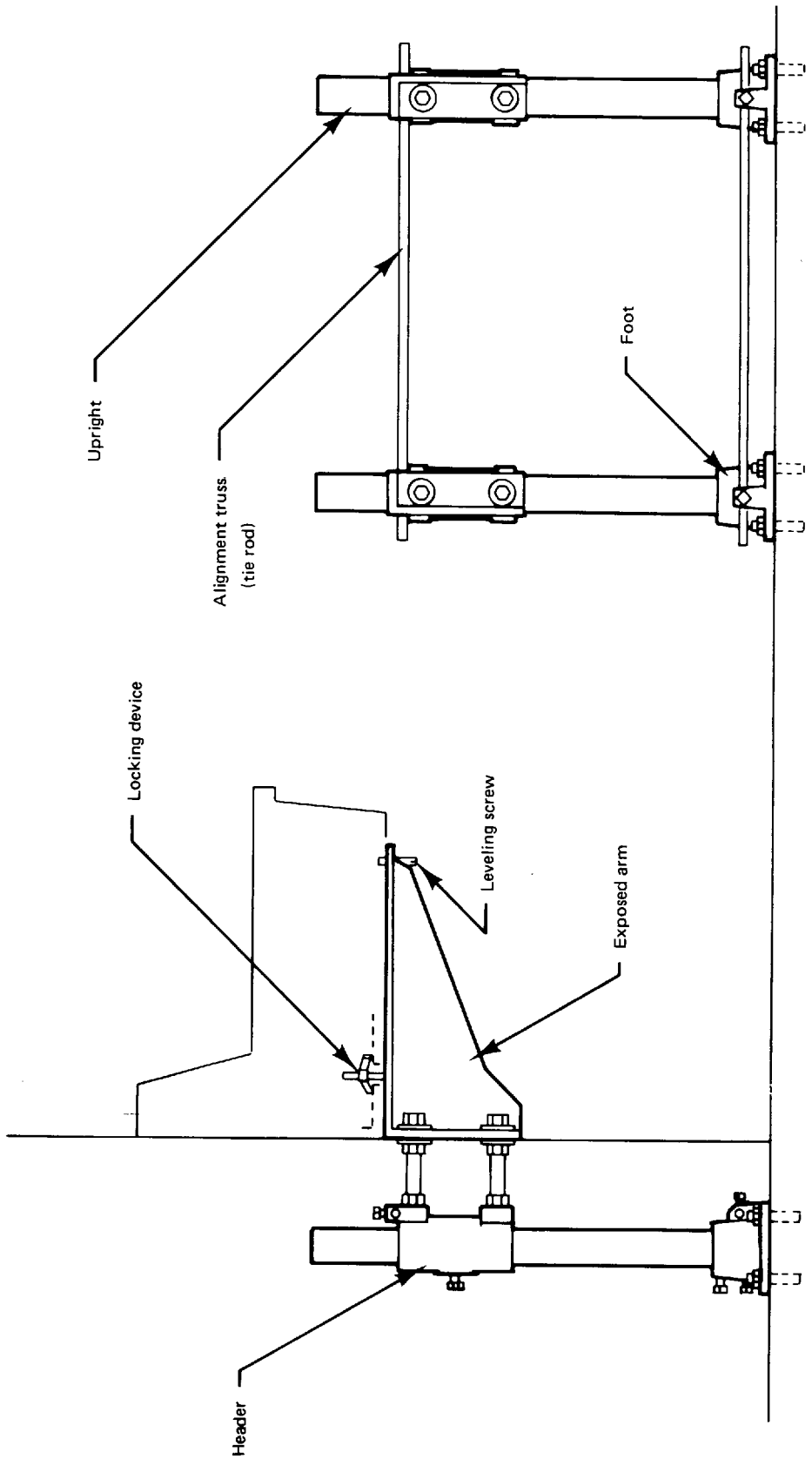

FIG.10 TYPE I SINK CARRIER

Copyright ASME International
Provided by IHS under license with ASME
No reproduction or networking permitted without license from IHS

Not for Resale

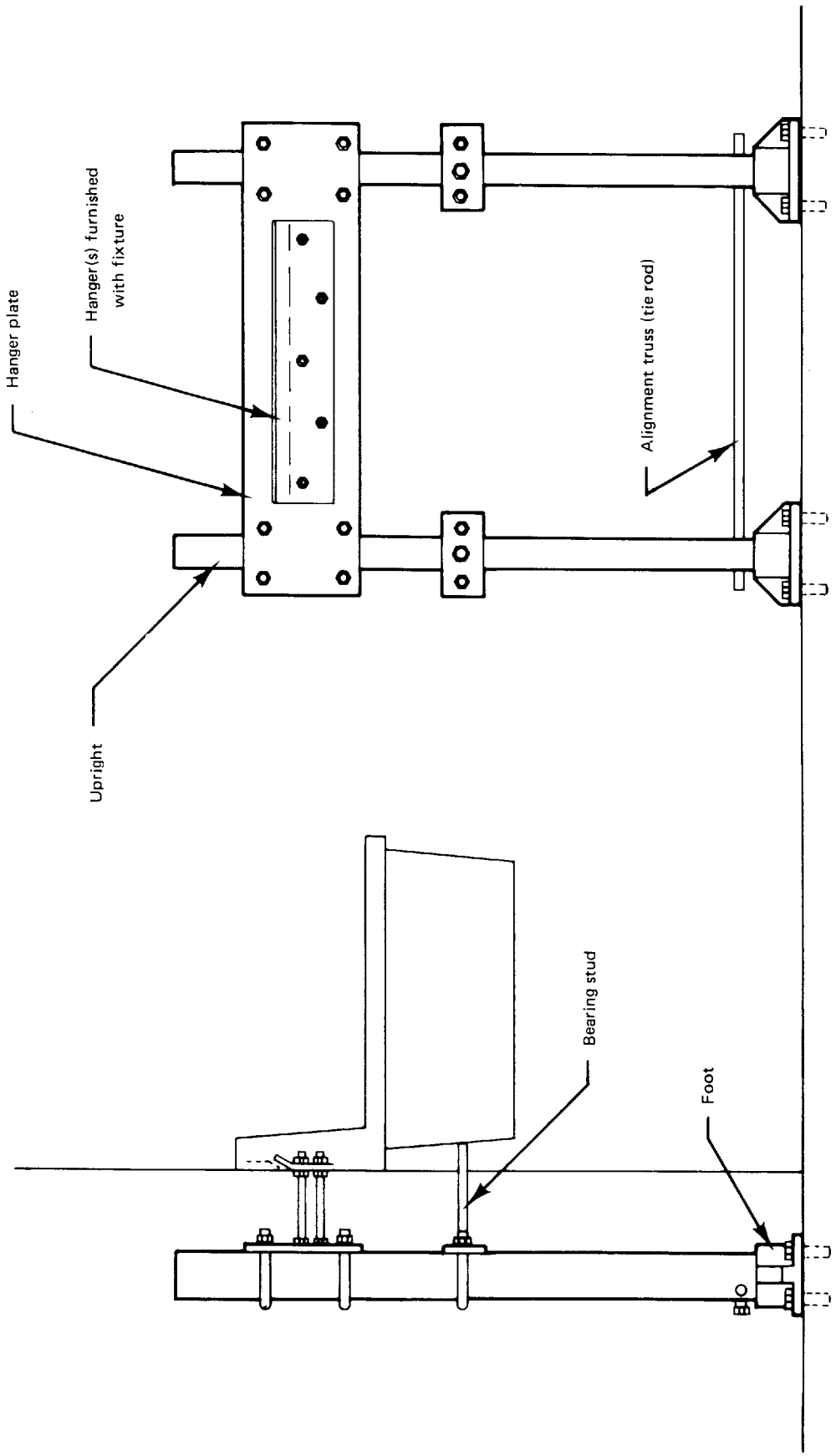

FIG.11 TYPE II SINK CARRIER

Copyright ASME International
Provided by IHS under license with ASME
No reproduction or networking permitted without license from IHS

Not for Resale

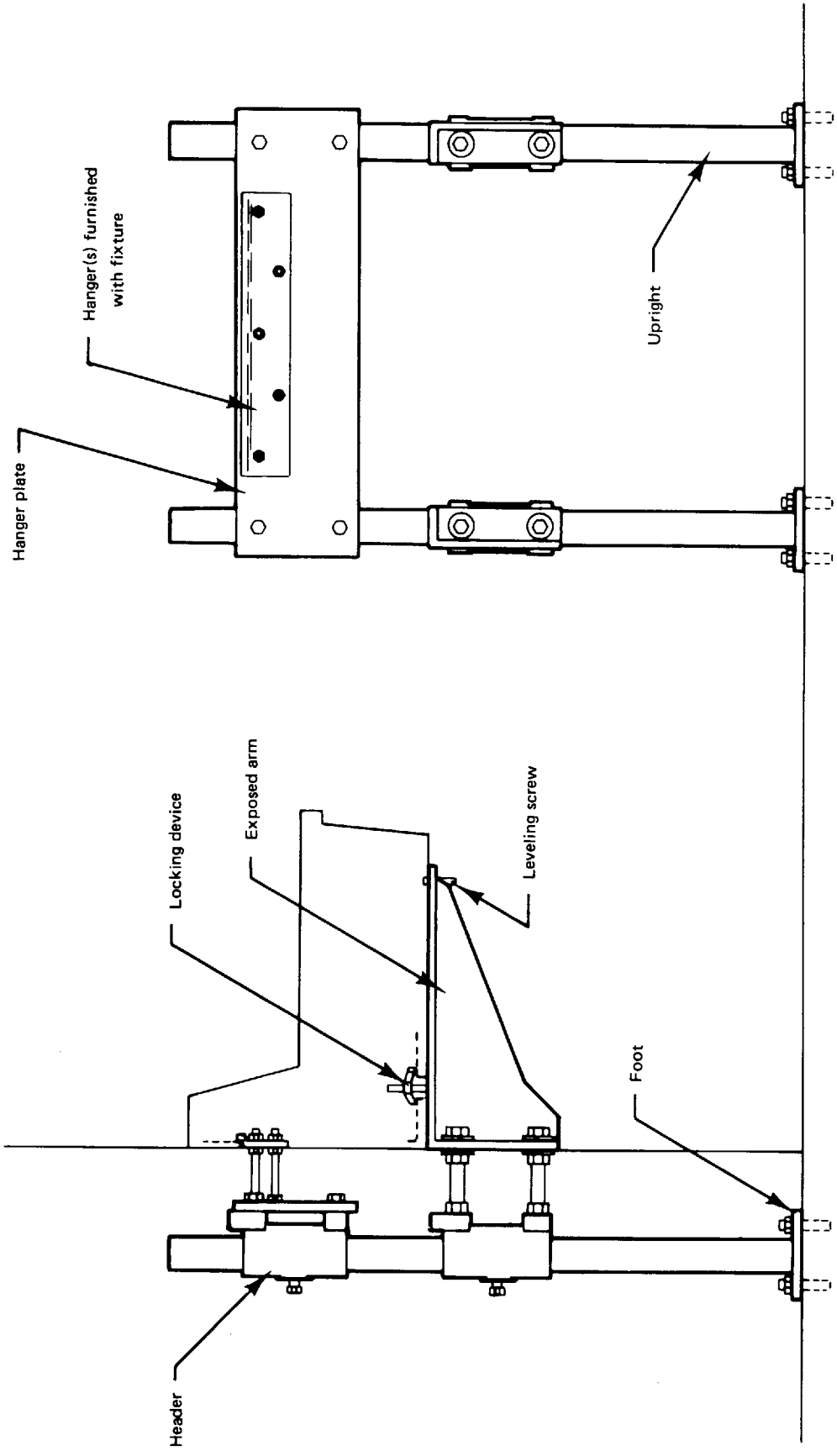

FIG. 12 TYPE III SINK CARRIER

Copyright ASME International
Provided by IHS under license with ASME
No reproduction or networking permitted without license from IHS

Not for Resale

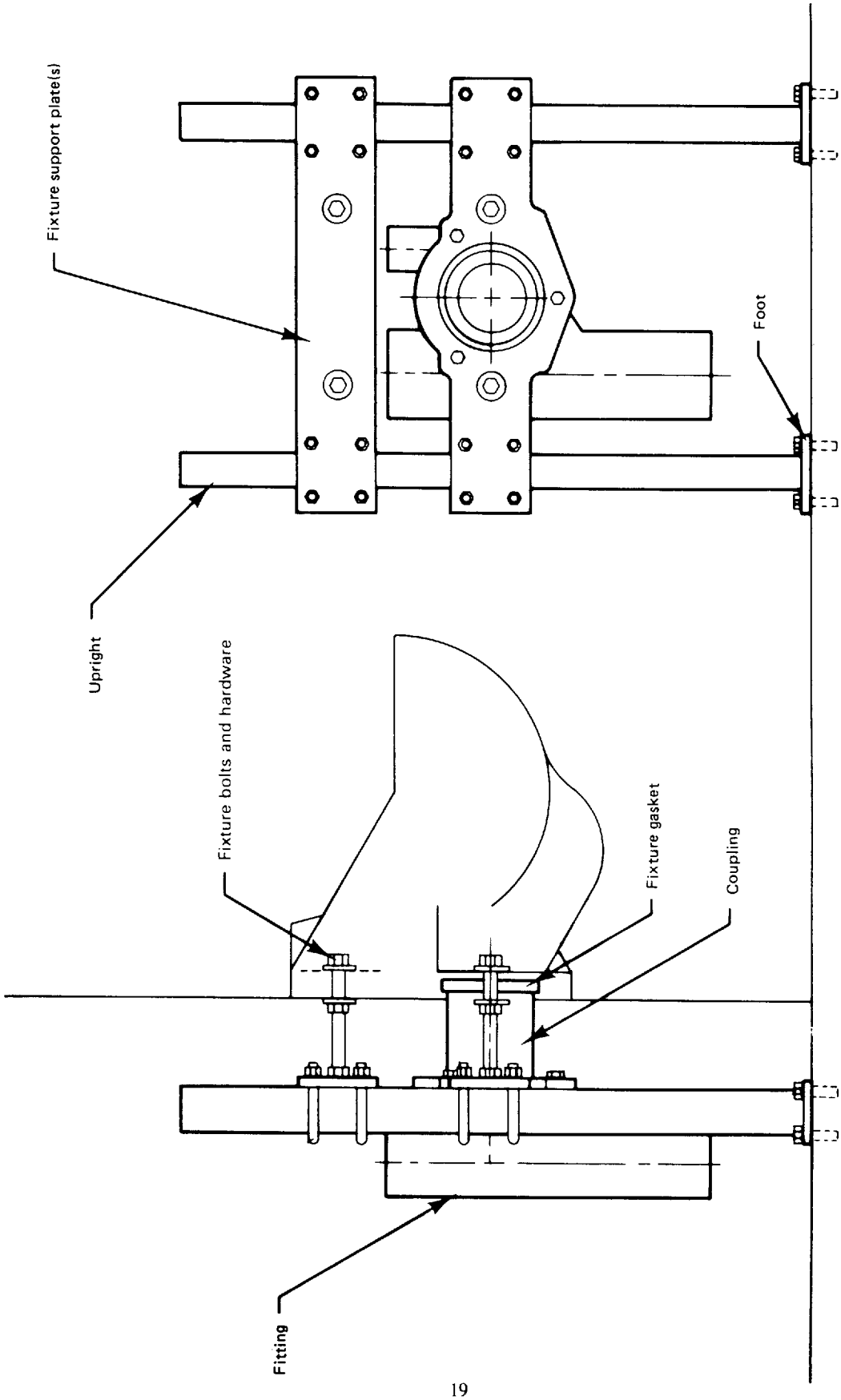

FIG. 13 TYPE IV SINK CARRIER

Copyright ASME International
Provided by IHS under license with ASME
No reproduction or networking permitted without license from IHS

Not for Resale

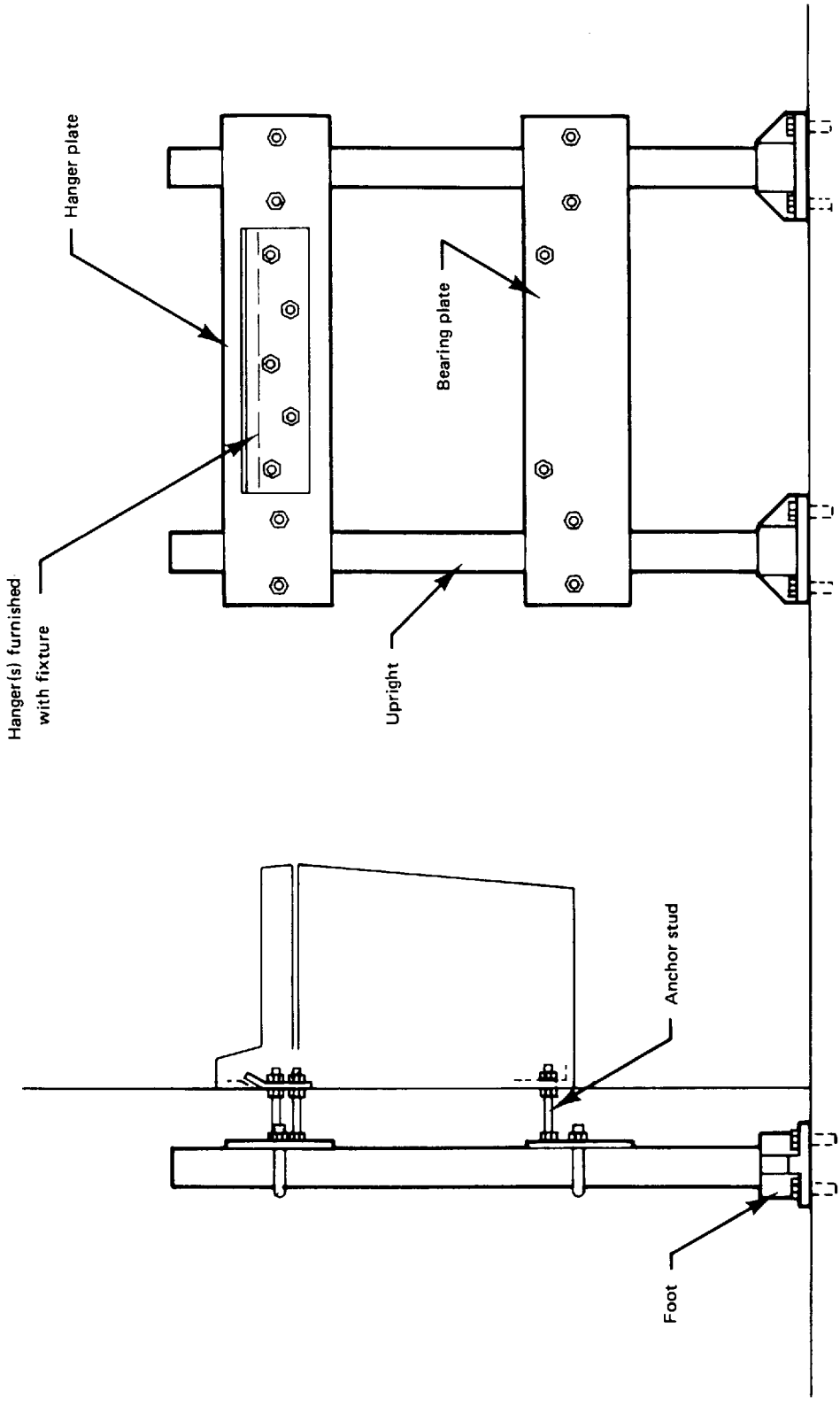

FIG. 14 TYPE I WATER COOLER CARRIER

Copyright ASME International
Provided by IHS under license with ASME
No reproduction or networking permitted without license from IHS

Not for Resale

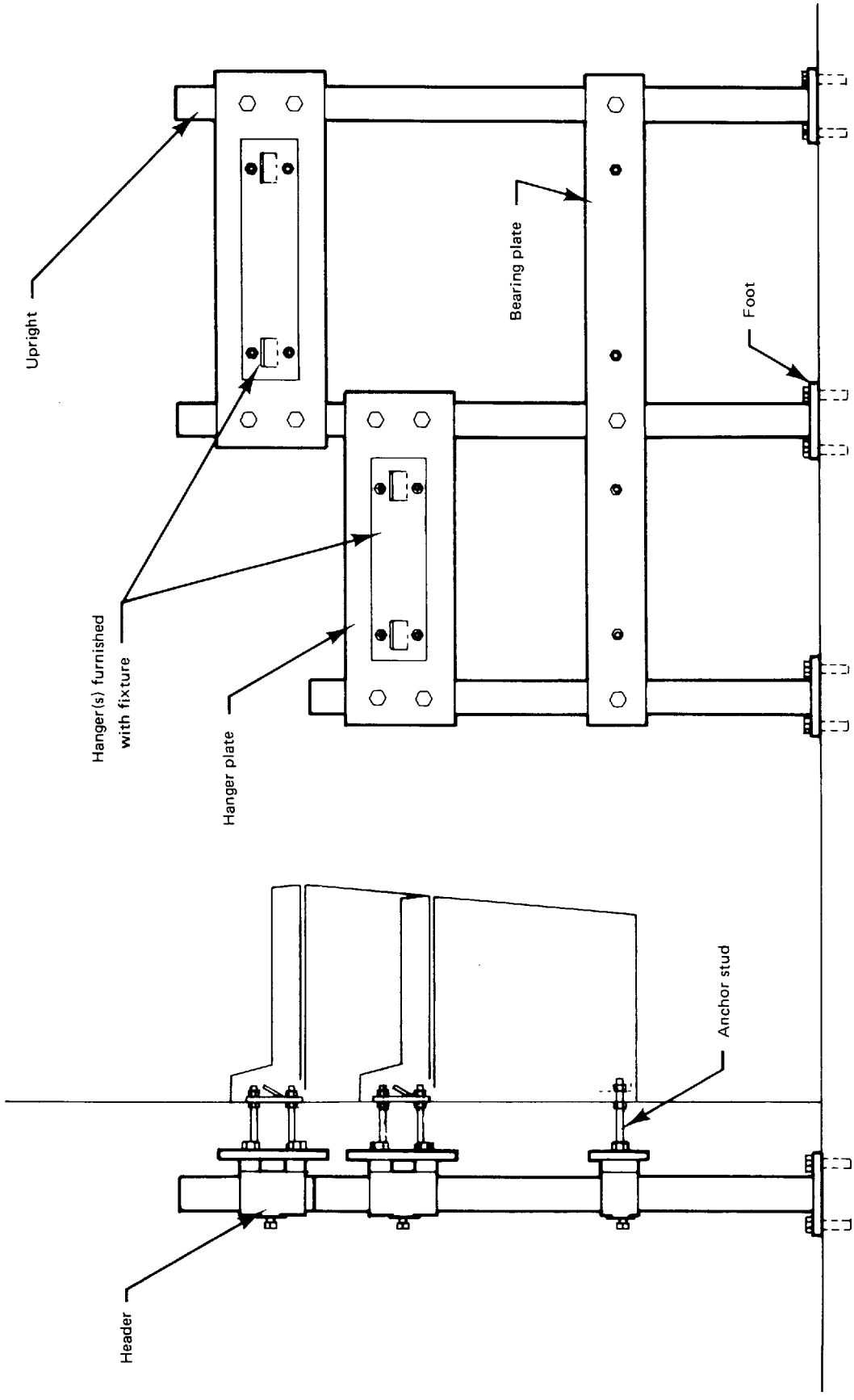

FIG. 15 TYPE II WATER COOLER CARRIER

Copyright ASME International
Provided by IHS under license with ASME
No reproduction or networking permitted without license from IHS

Not for Resale

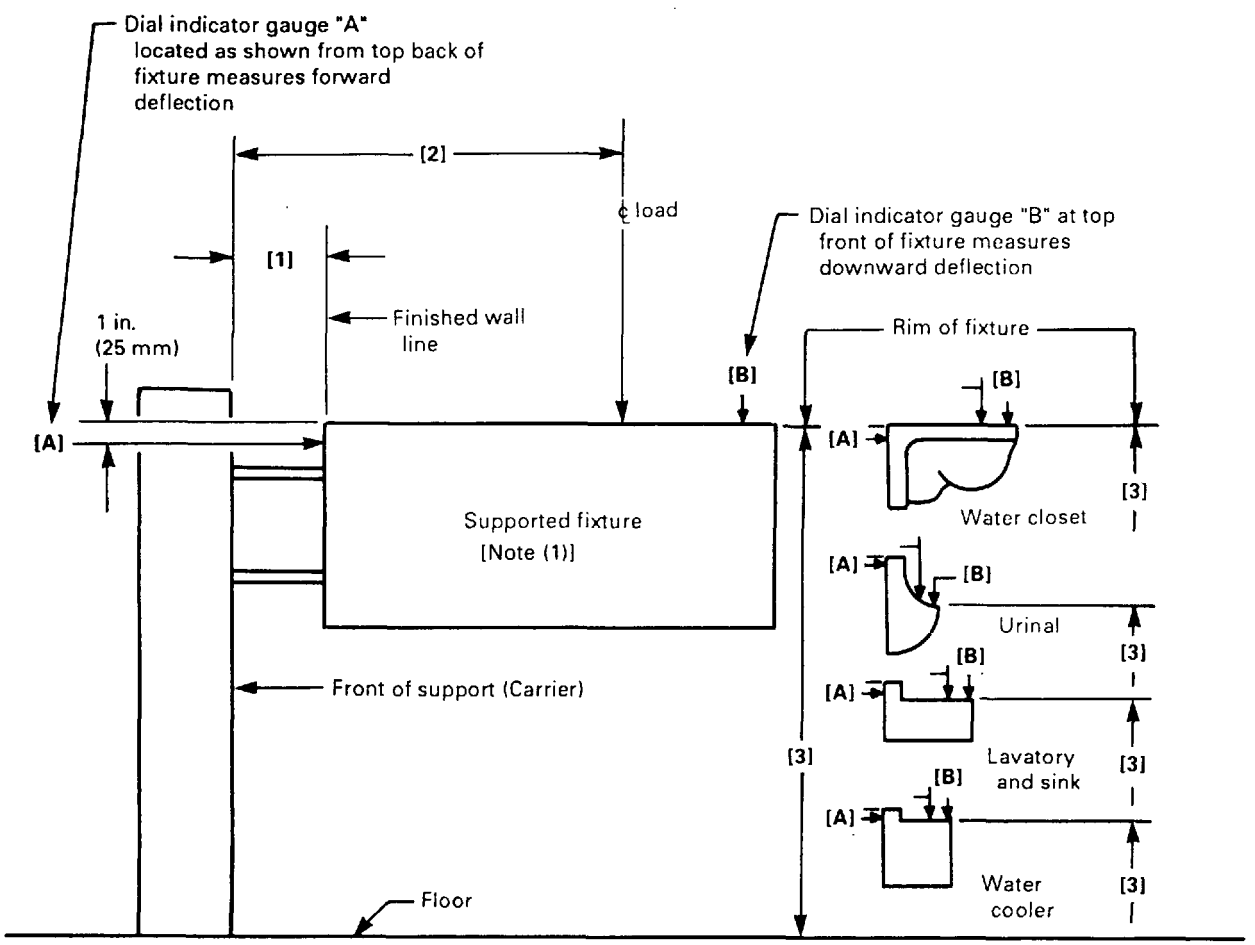

GENERAL NOTE:
[1], [2], [3], [A], and [B] are referenced to the same shown in Table 2.

NOTE:
(1) A suitable loading platform may be used in lieu of an actual plumbing fixture for the purpose of testing, except for hanger types where a fixture with hanger(s) is recommended.

FIG. 16 SCHEMATIC ARRANGEMENT OF TEST SETUP APPLICABLE TO ALL SUPPORT (CARRIER) TYPES COVERED BY THIS STANDARD

Copyright ASME International
Provided by IHS under license with ASME
No reproduction or networking permitted without license from IHS
Not for Resale

TABLE 2 STRENGTH AND DEFLECTION TEST CRITERIA FOR FIXTURE SUPPORTS (CARRIERS) COVERED BY THIS STANDARD

Requirements Paragraph	Support (Carrier) Type	Dimensions			Max. Test Load kg (lb)	Max. Deflection	
		mm (in.) [1]	mm (in.) [Note (1)] [2]	mm (in.) [3]		mm (in.) [A]	mm (in.) [B]
6.1	Water closet	102 (4)	584 (23)	381 (15)	136 (300)	3.2 (0.125)	9.5 (0.375)
7.1	Type I urinal	76 (3)	457 (18)	610 (24)	136 (300)	3.2 (0.125)	9.5 (0.375)
7.1	Type II urinal [Note (2)]	76 (3)	330 (13)	610 (24)	91 (200)	3.2 (0.125)	6.4 (0.250)
8.1	Type I lavatory	76 (3)	432 (17)	787 (31)	136 (300)	3.2 (0.125)	9.5 (0.375)
8.1	Type II lavatory	76 (3)	432 (17) [Note (3)]	787 (31)	113 (250)	3.2 (0.125)	9.5 (0.375) [Note (3)]
8.1	Type III lavatory [Note (2)]	76 (3)	432 (17)	787 (31)	91 (200)	3.2 (0.125)	9.5 (0.375)
9.1	Type I sink	76 (3)	457 (18)	914 (36)	68 (150) [Note (4)]	3.2 (0.125)	9.5 (0.375)
9.1	Type II sink [Note (2)]	76 (3)	457 (18)	914 (36)	46 (100) [Note (4)]	3.2 (0.125)	9.5 (0.375)
9.1	Type III sink [Note (2)]	76 (3)	432 (17)	787 (31)	68 (150) [Note (4)]	3.2 (0.125)	9.5 (0.375)
9.1	Type IV sink	76 (3)	457 (18)	762 (30)	136 (300)	3.2 (0.125)	9.5 (0.375)
10.1	Type I cooler [Note (2)]	76 (3)	330 (13)	1016 (40)	91 (200)	3.2 (0.125)	6.4 (0.250)
10.1	Type II cooler [Note (2)]	76 (3)	330 (13)	914 (36)	136 (300)	3.2 (0.125)	6.4 (0.250)

GENERAL NOTES:
(a) [1], [2], [3], [A], and [B] are referenced to the same shown in Fig. 16.
(b) Millimeters are rounded.

NOTES:
(1) Dimensions [2] are average. [2] = 75% of fixture depth + [1] for a given fixture.
(2) Tests of hanger type carriers shall be conducted with (simulated) wall in test setup.
(3) Dimension [2] shall be 559 mm (22 in.) for wheel chair lavatory carriers.
Deflection [B] shall be 13 mm (0.5 in.) for wheel chair lavatory carriers.
(4) Load Per Upright. Example: 3 Upright Carrier, multiply load given by 3.

Copyright ASME International
Provided by IHS under license with ASME
No reproduction or networking permitted without license from IHS Not for Resale

ASME STANDARDS RELATED TO PLUMBING

Air Gaps in Plumbing Systems A112.1.2-1991
Performance Standard and Installation Procedures for Stainless Steel Drainage Systems for Sanitary, Storm, and Chemical Applications, Above and Below Ground A112.3.1-1993
Water Heater Relief Valve Drain Tubes A112.4.1-1993
Floor-Affixed Supports for Off-the-Floor Plumbing Fixtures for Public Use A112.6.1M-1997
Backwater Valves ..... A112.14.1-1975(R1990)
Plumbing Fixture Fittings A112.18.1M-1996
Performance Requirements for Backflow Protection Devices and Systems in Plumbing Fixture Fittings A112.18.3M-1996
Enameled Cast Iron Plumbing Fixtures A112.19.1M-1994
Vitreous China Plumbing Fixtures A112.19.2M-1990
Stainless Steel Plumbing Fixtures (Designed for Residential Use) A112.19.3M-1987
Porcelain Enameled Formed Steel Plumbing Fixtures A112.19.4M-1994
Trim for Water-Closet Bowls, Tanks, and Urinals ..... A112.19.5-1979(R1990)
Hydraulic Requirements for Water Closets and Urinals A112.19.6-1990
Whirlpool Bathtub Appliances A112.19.7M-1995
Suction Fittings for Use in Swimming Pools, Wading Pools, Spas, Hot Tubs, and Whirlpool Bathtub Appliances A112.19.8M-1987
Non-vitreous Ceramic Plumbing Fixtures A112.19.9M-1991
Dual Flush Devices for Water Closets A112.19.10-1994
Floor Drains A112.21.1M-1991
Roof Drains A112.21.2M-1983
Hydrants for Utility and Maintenance Use A112.21.3M-1985
Water Hammer Arresters A112.26.1M-1984
Cleanouts A112.36.2M-1991

The ASME Publications Catalog shows a complete list of all the Standards published by the Society. For a complimentary catalog, or the latest information about our publications, call 1-800-THE-ASME (1-800-843-2763).

Copyright ASME International
Provided by IHS under license with ASME
No reproduction or networking permitted without license from IHS
Not for Resale