ASME A112.14.1-2003

(Revision of ANSI A112.14.1M-1975)

BACKWATER VALVES

AN AMERICAN NATIONAL STANDARD



The American Society of Mechanical Engineers

Copyright ASME International
Provided by IHS under license with ASME
No reproduction or networking permitted without license from IHS

Not for Resale

Copyright ASME International
Provided by IHS under license with ASME
No reproduction or networking permitted without license from IHS
Not for Resale

The American Society of Mechanical Engineers

AN AMERICAN NATIONAL STANDARD

BACKWATER VALVES

ASME A112.14.1-2003

(Revision of ANSI A112.14.1M-1975)

Copyright ASME International
Provided by IHS under license with ASME
No reproduction or networking permitted without license from IHS
Not for Resale

Date of Issuance: March 5, 2004

The next edition of this Standard is scheduled for publication in 2008. There will be no addenda issued to this edition.

ASME issues written replies to inquiries concerning interpretations of technical aspects of this Standard. Interpretations are published on the ASME Web site under the Committee Pages at http://www.asme.org/codes/ as they are issued.

ASME is the registered trademark of The American Society of Mechanical Engineers.

This code or standard was developed under procedures accredited as meeting the criteria for American National Standards. The Standards Committee that approved the code or standard was balanced to assure that individuals from competent and concerned interests have had an opportunity to participate. The proposed code or standard was made available for public review and comment that provides an opportunity for additional public input from industry, academia, regulatory agencies, and the public-at-large.

ASME does not "approve," "rate," or "endorse" any item, construction, proprietary device, or activity.

ASME does not take any position with respect to the validity of any patent rights asserted in connection with any items mentioned in this document, and does not undertake to insure anyone utilizing a standard against liability for infringement of any applicable letters patent, nor assume any such liability. Users of a code or standard are expressly advised that determination of the validity of any such patent rights, and the risk of infringement of such rights, is entirely their own responsibility.

Participation by federal agency representative(s) or person(s) affiliated with industry is not to be interpreted as government or industry endorsement of this code or standard.

ASME accepts responsibility for only those interpretations of this document issued in accordance with the established ASME procedures and policies, which precludes the issuance of interpretations by individuals.

No part of this document may be reproduced in any form,
in an electronic retrieval system or otherwise,
without the prior written permission of the publisher.

The American Society of Mechanical Engineers
Three Park Avenue, New York, NY 10016-5990

Copyright © 2004 by
THE AMERICAN SOCIETY OF MECHANICAL ENGINEERS
All rights reserved
Printed in U.S.A.

--`,,`-`-`,,`,,`,`,,`---

Copyright ASME International
Provided by IHS under license with ASME
No reproduction or networking permitted without license from IHS

Not for Resale

CONTENTS

Foreword iv
Committee Roster v
Correspondence With the A112 Committee vii

1 General 1

2 Requirements 2

3 Testing 6

4 Marking 6

Figures

1 Combination Floor Drain and Backwater Valve 3
2 Floor Drain With Adjustable Strainer and Backwater Valve 3
3 Floor Drain With Tractor Grate and Backwater Valve 3
4 Normally Open Backwater Valve 3
5 Nonmetallic Vertical Backwater Valve 3
6 Nonmetallic Backwater Valve With Access Sleeve 4
7 Nonmetallic Horizontal Backwater Valve 4

Tables

1 Dimensions for Horizontal Backwater Valves 2
2 Dimensions for Combination Horizontal Backwater Valve and Manual Gate Valves 4
3 Dimensions for Terminal Backwater Valves 5

Copyright ASME International
Provided by IHS under license with ASME
No reproduction or networking permitted without license from IHS
Not for Resale

FOREWORD

The American National Standards Committee A112, Plumbing Materials and Equipment, was established on July 27, 1955. Its first organizational meeting was held on July 22, 1958, and Panel No. 14 was created on May 1, 1964, to establish standards for interceptors, separators, and backwater valves. Its charter was as follows: the recommendation of suitable existing standards in cooperation with interested sponsors, or the development of adequate new standards as needed for interceptors, separators, and backwater valves as used or installed in plumbing systems.

The A112 Committee underwent a number of organizational changes over the years and is currently identified as ASME Standards Committee A112. Its Panel 14 working group, with the responsibility for backwater valves, was redesignated Project Team 14.1. The Project Team met twice to prepare this revision, which now includes criteria from the International Association of Plumbing and Mechanical Official's (IAPMO) Product Standard 38.

Suggestions for the improvement of this Standard are welcome. They should be sent to The American Society of Mechanical Engineers; Attn: Secretary, A112 Main Committee; Three Park Avenue; New York, NY 10016-5990.

This revision was approved by the A112 Main Committee and by the ASME Board on Standardization. It was approved as an American National Standard on December 31, 2003.

Copyright ASME International
Provided by IHS under license with ASME
No reproduction or networking permitted without license from IHS
Not for Resale

ASME A112 STANDARDS COMMITTEE
Standardization of Plumbing Materials and Equipment

(The following is the roster of the Committee at the time of approval of this Standard.)

OFFICERS

D. W. Viola, *Chair*
S. A. Remedios, *Vice Chair*
C. J. Gomez, *Secretary*

COMMITTEE PERSONNEL

R. H. Ackroyd, Rand Engineering
J. A. Ballanco, JB Engineering and Code Consulting
J. Bouwer, Sanitary for All, Ltd.
M. N. Burgess, Burgess Group, Inc.
S. L. Cavanaugh, United Association
A. Ciechanowski, NSF International
J. R. Paschal, *Alternate,* NSF International
A. Cohen, A. Cohen and Associates
P. V. DeMarco, American Standard, Inc.
N. Covino, *Alternate,* American Standard, Inc.
G. S. Duren, Code Compliance, Inc.
R. Emmerson, The Chicago Faucet Co.
F. C. Evans, *Alternate,* The Chicago Faucet Co.
L. S. Galowin, National Institute of Standards and Technology
C. J. Gomez, The American Society of Mechanical Engineers
R. I. Greenwald, Sunroc Corp.
E. Ho, IAMO Research and Testing, Inc.
D. E. Holloway, SGS US Testing Co.
M. Klimboff, Consultant
M. T. Kobel, IAPMO
N. M. Kummerlen, Moen, Inc.
L. A. Mercer, *Alternate,* Moen, Inc.
J. W. Lauer, Sloan Valve Co.
R. M. Martin, California Energy Commission
P. W. Meikle, P. W. Meikle Consulting
S. Rawalpindiwala, Kohler Co.
J. A. Sargent, *Alternate,* Kohler Co.
S. A. Remedios, Delta Faucet Co.
G. L. Simmons, Charlotte Pipe and Foundry
L. M. Simnick, BOCA International
W. M. Smith, Jay R. Smith Industries, Inc.
D. W. Viola, Plumbing Manufacturers Institute
R. E. White, Richard E. White and Associates
W. C. Whitehead, Plumbing and Drainage Institute

Copyright ASME International
Provided by IHS under license with ASME
No reproduction or networking permitted without license from IHS
Not for Resale

A112 PROJECT TEAM 14.1 — METALLIC AND NONMETALLIC BACKWATER VALVES

W. M. Smith, *Project Team Leader,* Jay R. Smith Industries, Inc.
C. R. Graham, *Deputy Project Team Leader,* Martech Enterprises
W. C. Whitehead, *Project Team Secretary,* Plumbing and Drainage Institute
R. H. Ackroyd, Rand Engineering
J. A. Ballanco, JB Engineering and Code Consulting
R. C. Guinn, Canplas Industries, Ltd.
M. T. Kobel, IAPMO
J. W. Lauer, Sloan Valve Co.
R. B. Martin, W/C Technology Corp.
S. J. McDanal, Jay R. Smith Manufacturing Co.
J. L. Neumann, Eljer Plumbingware
D. W. Viola, Plumbing Manufacturers Institute
F. R. Volgstadt, Volgstadt and Associates, Inc.
R. E. White, Richard E. White and Associates

Copyright ASME International
Provided by IHS under license with ASME
No reproduction or networking permitted without license from IHS
Not for Resale

CORRESPONDENCE WITH THE A112 COMMITTEE

General. ASME Standards are developed and maintained with the intent to represent the consensus of concerned interests. As such, users of this Standard may interact with the Committee by requesting interpretations, proposing revisions, and attending Committee meetings. Correspondence should be addressed to:

Secretary, A112 Standards Committee
The American Society of Mechanical Engineers
Three Park Avenue
New York, NY 10016-5990

Proposing Revisions. Revisions are made periodically to the Standard to incorporate changes that appear necessary or desirable, as demonstrated by the experience gained from the application of the Standard. Approved revisions will be published periodically.

The Committee welcomes proposals for revisions to this Standard. Such proposals should be as specific as possible, citing the edition, the paragraph number(s), the proposed wording, and a detailed description of the reasons for the proposal, including any pertinent documentation. When appropriate, proposals should be submitted using the A112 Project Initiation Request Form.

Interpretations. Upon request, the A112 Committee will render an interpretation of any requirement of the Standard. Interpretations can only be rendered in response to a written request sent to the Secretary of the A112 Standards Committee.

The request for interpretation should be clear and unambiguous. It is further recommended that the inquirer submit his/her request in the following format:

Subject:	Cite the applicable paragraph number(s) and the topic of the inquiry.
Edition:	Cite the applicable edition of the Standard for which the interpretation is being requested.
Question:	Phrase the question as a request for an interpretation of a specific requirement suitable for general understanding and use, not as a request for an approval of a proprietary design or situation. The inquirer may also include any plans or drawings that are necessary to explain the question; however, they should not contain proprietary names or information.

Requests that are not in this format will be rewritten in this format by the Committee prior to being answered, which may inadvertently change the intent of the original request.

ASME procedures provide for reconsideration of any interpretation when or if additional information that might affect an interpretation is available. Further, persons aggrieved by an interpretation may appeal to the cognizant ASME Committee or Subcommittee. ASME does not "approve," "certify," "rate," or "endorse" any item, construction, proprietary device, or activity.

Attending Committee Meetings. The A112 Standards Committee schedules meetings as needed, which are open to the public. Persons wishing to attend any meeting should contact the Secretary of the A112 Standards Committee. The A112 home page contains information on future meeting dates and locations.

Copyright ASME International
Provided by IHS under license with ASME
No reproduction or networking permitted without license from IHS
Not for Resale

Copyright ASME International
Provided by IHS under license with ASME
No reproduction or networking permitted without license from IHS
Not for Resale

BACKWATER VALVES

1 GENERAL

1.1 Scope

This Standard establishes requirements for dimensions, performance requirements, connections, materials and finishes, testing, and marking of backwater valves. Types of backwater valves covered in this Standard include horizontal backwater valves, combination horizontal backwater valves and manual gate valves, terminal backwater valves, combination floor drains with backwater valves, vertical or 90 deg backwater valve, and related products.

1.2 Units of Measurement

Values are stated in U.S. Customary units and the International System of Units (SI). The U.S. Customary units shall be considered as the standard.

1.3 Illustrations

The figures included in this Standard are intended only to describe and portray typical types of backwater valves and are not intended to restrict design nor to be used for specification purposes.

1.4 Reference Standards

The following standards are referenced in this document (unless otherwise specified, the latest edition shall apply):

ASME B1.20.1, Pipe Threads (Excluding Dryseal)
ASME B16.1, Cast Iron Pipe Flanges and Flanged Fittings
Publisher: The American Society of Mechanical Engineers (ASME International), Three Park Avenue, New York, NY 10016-5990; Order Department: 22 Law Drive, Box 2300, Fairfield, NJ 07007-2300

ASTM A 48, Grey Iron Castings
ASTM A 74, Cast Iron Soil Pipe and Fittings
ASTM A 307, Carbon Steel Externally Threaded Fasteners
ASTM A 351, Austenitic Steel Castings for High-Temperature Service
ASTM A 888, Hubless Cast Iron Soil Pipe and Fittings for Sanitary and Storm Drain, Waste and Vent Piping Applications
ASTM B 16, Free Cutting Brass Rod, Bar and Shapes for Use in Screw Machines
ASTM B 584, Copper Alloy Sand Castings for General Applications
ASTM C 564, Rubber Gaskets for Cast Iron Soil Pipe and Fittings
ASTM C 1440, Standard Specification for Thermoplastic Elastomeric (TPE) Gasket Materials for Drain, Waste, and Vent (DWV), Sewer, Sanitary and Storm Plumbing Systems
ASTM D 1784, Rigid Poly (Vinyl Chloride) (PVC) Compounds and Chlorinated Poly (Vinyl Chloride) (CPVC) Compounds
ASTM D 2661, Acrylonitrile-Butadiene-Styrene (ABS) Schedule 40 Plastic Drain, Waste, and Vent Pipe and Fittings
ASTM D 2665, Poly (Vinyl Chloride) (PVC) Plastic Drain, Waste and Vent Pipe and Fittings
ASTM D 3965, Rigid Acrylonitrile-Butadiene-Styrene (ABS) Compounds for Pipe and Fittings
Publisher: The American Society for Testing and Materials (ASTM), 100 Barr Harbor Drive, West Conshohocken, PA 19428

CSA B 181.1, ABS Drain Waste and Vent Pipe and Pipe Fittings
CSA B 181.2, PVC Drain Waste and Vent Pipe and Pipe Fittings
CSA B 182.1, PVC Plastic Drain and Sewer Pipe and Pipe Fittings
CSA B 602, Mechanical Couplings for Drain, Waste, and Vent Pipe and Sewer Pipe
Publisher: Canadian Standards Association, 5060 Spectrum Way, Suite 100, Mississauga, Ontario, L4W 5N6, Canada

1.5 Definitions

backwater valve: a device installed in building drainage systems utilizing a check valve to prevent backflow. Backwater valves are designed in either normally open position or normally closed position.

normally open backwater valve: a backwater valve designed in such a manner as not to interfere with the movement of the air in the drainage system. When installed, the swing check hangs in a normally open position.

normally closed backwater valve: a backwater valve designed in such a manner that when installed, the swing check remains closed until flow causes it to open.

blow hole: hole in casting due to air or gas in the metal or mold.

Copyright ASME International
Provided by IHS under license with ASME
No reproduction or networking permitted without license from IHS
Not for Resale

cold shut: casting defects formed when two streams of metal become so cold that they do not fuse upon meeting, creating an incomplete casting.

fin: projection on castings due to imperfect joints.

flashing: a flashing is to a plastic injected molded backwater valve body as a fin is to a cast iron product.

invert to the outlet: the lowest portion of the inside of any horizontal shape. In this case, the lowest portion of the inside of the outlet.

pickle: the chemical or electrochemical removal of surface oxides such as mill scale, and/or oxides formed during storage, and weld discolorations.

1.6 Types of Backwater Valves

1.6.1 Horizontal Backwater Valve. A backwater valve designed to be installed in a horizontal drain line incorporating an internal check member to prevent backflow. (See the figure associated with Table 1.)

1.6.2 Combination Horizontal Backwater Valve and Manual Gate Valve. A backwater valve designed to be installed in a horizontal drain line incorporating an internal check member and manual gate valve to prevent backflow. (See the figure associated with Table 2.)

1.6.3 Terminal Backwater Valve. A backwater valve designed to be installed at the discharge end of a horizontal drain line incorporating a check member to prevent backflow. (See the figure associated with Table 3.)

1.6.4 Combination Floor Drain and Backwater Valve. A floor drain incorporating an internal check member to prevent backflow. (See Figs. 1, 2, and 3.)

1.6.5 Normally Open Backwater Valve. A backwater valve designed in such a manner as not to interfere with the movement of the air in the drainage system. See Fig. 4.

1.6.6 Vertical or 90-Deg Backwater Valve. A backwater valve designed to be installed in vertical piping, such as downstream from a P-trap or a holding tank. See Figs. 5, 6, and 7.

2 REQUIREMENTS

2.1 Dimensions

2.1.1 The backwater valve shall comply with the minimum dimensional requirements indicated in Tables 1 through 3.

2.1.2 Hub and spigot dimensions shall comply with the appropriate hub and spigot requirements of the joining materials.

2.2 Performance Requirements

2.2.1 Normally Closed Backwater Valve. Backwater valves designed to be normally closed shall be so constructed such that when the valve is installed at the required 1:48 slope (¼ in. per foot) with respect to the direction of flow, the check member will be in a closed position when no sewage is discharged. The valve will remain sufficiently open during periods of low flows to avoid the screening of solids.

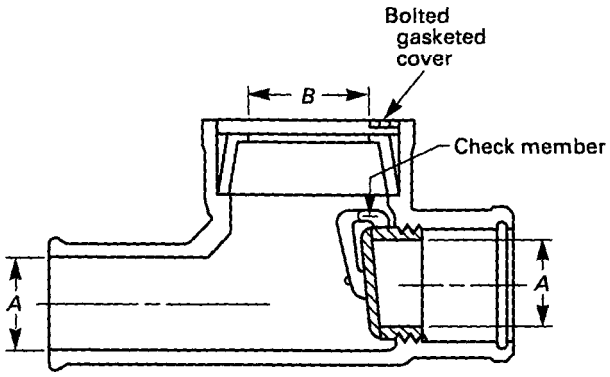

(a) Hub and Spigot Type

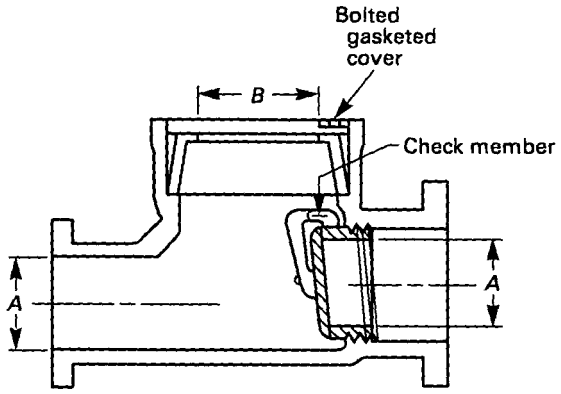

(b) Flanged Type

Table 1 Dimensions for Horizontal Backwater Valves

Nominal Size, in.	A, in. (mm)	B, in. (mm) Opening
2	2 (51)	3 (76)
3	3 (76)	5 (127)
4	4 (102)	6 (152)
5	5 (127)	7 (178)
6	6 (152)	8 (203)
8	8 (203)	10 (254)

2.2.2 Normally Open Backwater Valve. Backwater valves designed to be normally open shall be so constructed such that when the valve is installed at the required 1:48 slope (¼ in. per foot) with respect to the direction of flow, the check member will be in an open

Copyright ASME International
Provided by IHS under license with ASME
No reproduction or networking permitted without license from IHS
Not for Resale

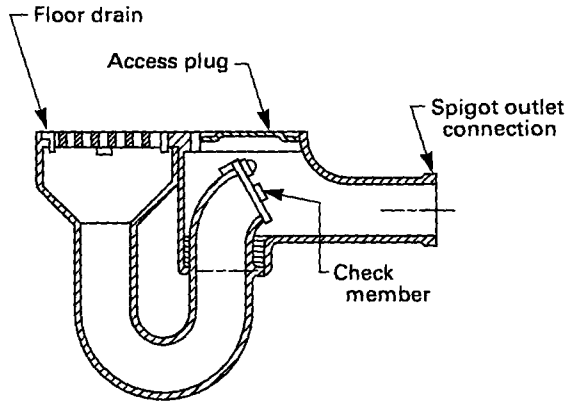

Fig. 1 Combination Floor Drain and Backwater Valve

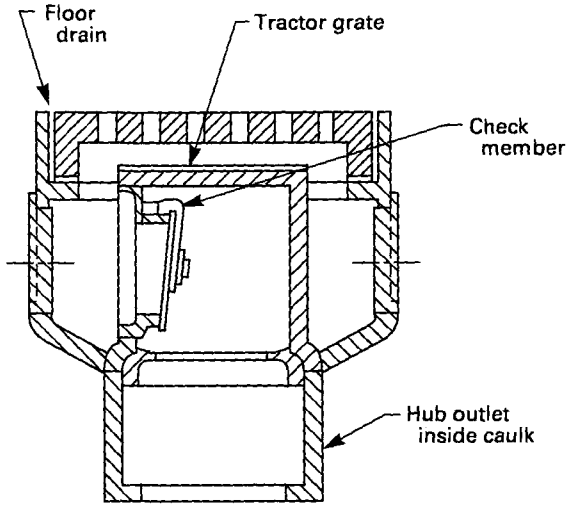

Fig. 3 Floor Drain With Tractor Grate and Backwater Valve

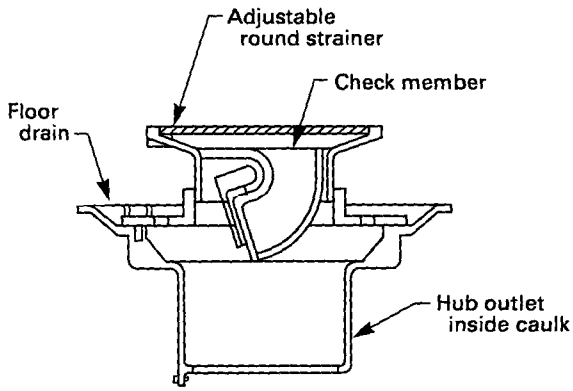

Fig. 2 Floor Drain With Adjustable Strainer and Backwater Valve

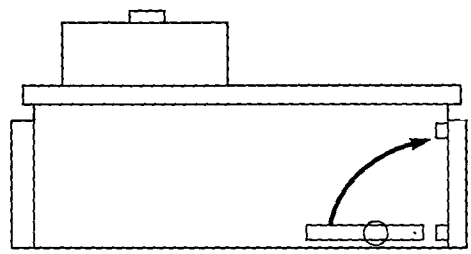

Fig. 4 Normally Open Backwater Valve

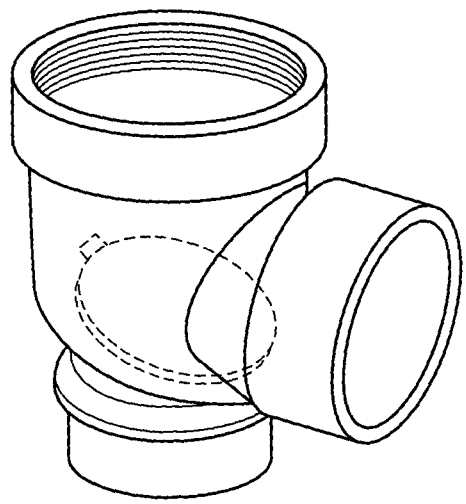

Fig. 5 Nonmetallic Vertical Backwater Valve

position but will close when fluid backflow occurs. The valve shall not reduce the hydraulic capacity of the connecting pipe. (See Fig. 4.)

2.2.3 Grade. The valve shall be designed and constructed such that when installed in its proper operating position in the drainage system, the upper face of the cover shall be parallel to the invert to the outlet so that the slope of the drain can be readily determined by placing a level on the top of the cover.

2.2.4 Access. The valve shall be designed to provide access to working components for repair or replacement. The size of the access shall be based upon the requirements necessary to perform the repair or maintenance. The access cover shall be water and gas tight once installed.

Copyright ASME International
Provided by IHS under license with ASME
No reproduction or networking permitted without license from IHS
Not for Resale

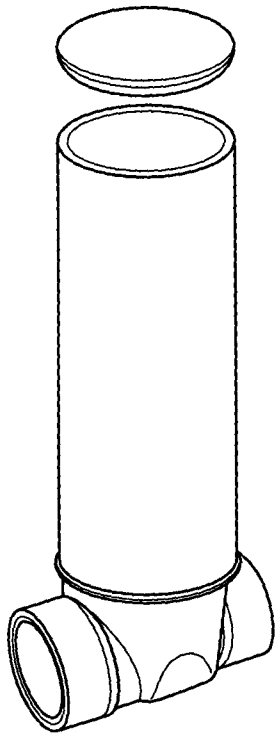

Fig. 6 Nonmetallic Backwater Valve With Access Sleeve

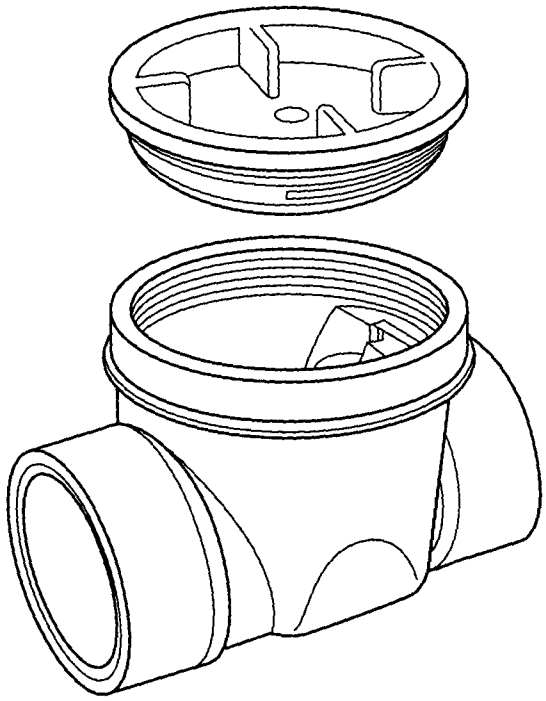

Fig. 7 Nonmetallic Horizontal Backwater Valve

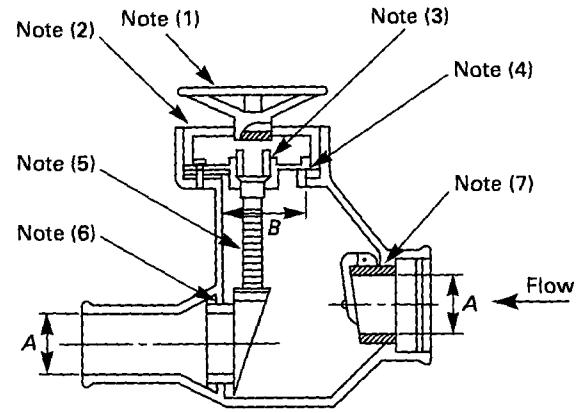

(a) Hub and Spigot Type

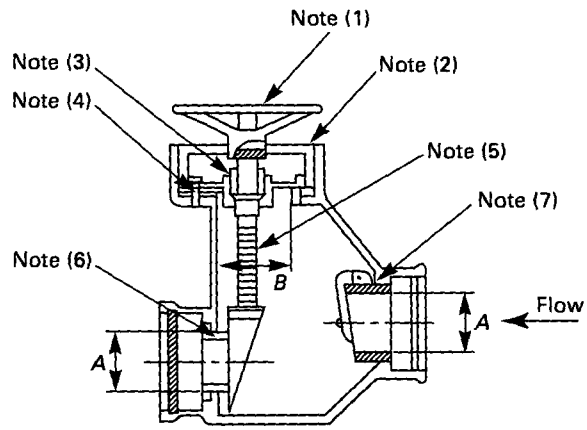

(b) Double Hub Type

NOTES:
(1) Removable hand wheel
(2) Access cover
(3) Packing nut
(4) Gasketed gland plate
(5) Nonrising stem
(6) Gate valve and seat
(7) Check member

Table 2 Dimensions for Combination Horizontal Backwater Valve and Manual Gate Valves

Nominal Size, in.	*A*, in. (mm)	*B*, in. (mm) Opening
3	3 (76)	5 (127)
4	4 (102)	6 (152)
5	5 (127)	7 (178)
6	6 (152)	8 (203)

Copyright ASME International
Provided by IHS under license with ASME
No reproduction or networking permitted without license from IHS
Not for Resale

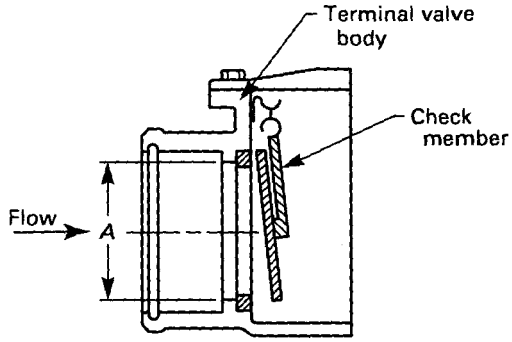

(a) Hub Inlet Type

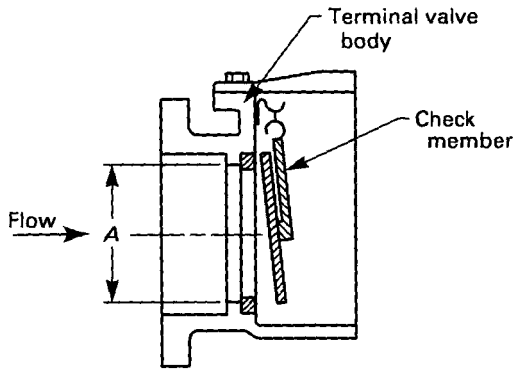

(b) Flanged Inlet Type

Table 3 Dimensions for Terminal Backwater Valves

Nominal Size, in.	*A*, min., in. (mm)
2	2 (51)
3	3 (76)
4	4 (102)
5	5 (127)
6	6 (152)
8	8 (203)
10	10 (254)
12	12 (305)

2.2.5 Sealing Elements. Parts that are used to affect sealing shall be secured in a manner that will maintain proper alignment of mating surfaces. Moving and stationary parts shall not loosen or become detached during handling or operation of the unit and shall be replaceable.

2.3 Connections

2.3.1 Hub and Spigot. Hub and spigot connections shall conform to ASTM A 74 for soil pipe and fittings.

2.3.2 Flanged. Flanged connections shall conform to the Class 125 requirements in ASME B16.1.

2.3.3 Hubless. Hubless connections shall conform to ASTM A 888.

2.3.4 Threaded. Threaded outlet connections shall comply with ASME B1.20.1.

2.3.5 Solvent Cement. Solvent cemented outlet connections shall be made using the appropriate solvent cement and methods of joining. ABS solvent cement joints shall be in accordance with ASTM D 2661 and PVC solvent cement joints shall be in accordance with ASTM D 2665.

2.3.6 O-Ring Joints. O-ring joints shall comply with ASTM C 564, ASTM C 1440, or CSA B 602.

2.4 Materials and Finishes

2.4.1 General. The items covered in this Standard shall be of the material specified, suitable for installation and service in the place specified, and shall meet all applicable requirements and standards given herein. Materials other than those specified in this Standard may be used provided such alternative materials, in all other respects, meet the applicable requirements of this Standard.

2.4.2 Internal Working Parts. The internal working parts such as valve seat, flap, hinge pins, and stems shall be copper alloy in accordance with ASTM B 16, stainless steel in accordance with ASTM A 351, or equally corrosion resisting material. The castings or moldings for backwater valves shall be sound, free of blow holes, cold shuts, fins, flashings, and other imperfections affecting casting quality and shall be of uniform thickness.

2.4.3 Cast Iron. Castings shall conform to Class 25 in accordance with ASTM A 48. The minimum thickness for the casting shall be $^{7}/_{32}$ in. (6 mm).

2.4.4 Copper Alloy. Castings shall conform to ASTM B 584 and be either Copper Alloy No. 83600, 83800, or 84400. The minimum thickness for the casting shall be $^{5}/_{32}$ in. (3.96 mm).

2.4.5 ABS. Backwater valve bodies manufactured from acrylonitrile-butadiene-styrene (ABS) shall conform to the physical property requirements contained in ASTM D 3965. The minimum cell classification shall be 3-2-2-2-2. The minimum thickness for the casting valve bodies shall be $^{5}/_{32}$ in. (3.96 mm). Inserts for fasteners in plastic backwater drains shall be molded into the plastic material. Clean, rework plastic generated from the manufacturer's own valve product and conforming to the cell requirements shall be permitted to be used provided that the valves comply with all requirements of this Standard.

2.4.6 PVC. Backwater valve bodies manufactured from polyvinyl chloride (PVC) shall conform to the physical property requirements contained in ASTM D 1784. The cell classification shall be 12454-B, 12454-C,

Copyright ASME International
Provided by IHS under license with ASME
No reproduction or networking permitted without license from IHS
Not for Resale

or 14333-D. The minimum thickness for the valve bodies shall be $^{5}/_{32}$ in. (3.96 mm). Inserts for fasteners in plastic drains shall be molded into the plastic material. Clean, rework plastic generated from the manufacturer's own valve product and conforming to the cell requirements shall be permitted to be used provided that the valves comply with all requirements of this Standard.

2.4.7 Bolting Materials

2.4.7.1 Steel. The materials for studs, nuts, bolts, cap screws, and other steel fasteners shall, as a minimum, conform to the requirements of ASTM A 307, Grade A. Threads shall be Class 2A and Class 2B and shall be plated. Fasteners fabricated from stainless steel shall be 300 series alloy.

2.4.7.2 Copper Alloy. The materials for nuts, bolts, cap screws and other copper alloy fasteners shall, as a minimum, conform to the requirements of ASTM B 16. Threads shall be Class 2A and Class 2B.

2.4.8 Finishes. In all cases where parts are to be coated or plated, they shall be pickled as required and cleaned to provide a suitable surface for proper bonding of the finish.

2.4.8.1 Paint Coatings. Cast iron castings shall be cleaned and coated with suitable paint, lacquer or synthetic coating of quality to provide protection against serious rusting of ferrous surfaces during normal handling and warehousing prior to installation.

2.4.8.2 Cadmium Plate. After pre-plating cleaning, parts shall be given a Commercial Grade Cadmium Plate.

2.4.8.3 Galvanized Coating. After pre-coating cleaning, parts shall be given a Commercial Grade Zinc (Galvanized) coating.

3 TESTING

3.1 Water Flow

The opening through the valve shall permit the passage of a cylinder 12 in. (305 mm) long and a diameter as follows:

Nominal Size, in.	Diameter of Cylinder, in. (mm)
1.5	0.75 (19)
2	1.00 (25)
3	1.50 (38)
4	2.00 (50)
6	3.00 (76)
8	4.00 (101)

Where the backwater valve body has an integral quarter bend on the outlet, or assembled in a floor drain, the test cylinder shall pass through the valve to the point of interference with the quarter bend or floor drain.

3.2 Watertightness

The valve shall be positioned in its normal operating position as prescribed by the manufacturer. A water source capable of 5 psi (34 kPa) shall be affixed to the outlet of the backwater valve. The water pressure shall be increased to 5 psi (34 kPa) in four steps as follows:

Water Pressure, psi (kPa)
0.25 (1.7)
0.50 (3.4)
1.0 (6.8)
5.0 (34)

The pressure shall be maintained at each step for 10 min ±15 sec. During each test period any water that is emitted from the entrance side of the fitting shall be collected, measured, and recorded. The water leakage shall not exceed the following:

Nominal Size, in.	Volume of Collected Water, fl oz (mL)
1.5	5.5 (162)
2	9.5 (281)
3	21.5 (636)
4	38.5 (1 139)
6	87.0 (2 473)
8	153.0 (4 525)

4 MARKING

The backwater valve shall be marked as follows:
(a) the manufacturer's name and/or trademark
(b) for plastic valves, the letters "ABS" or "PVC"(whichever material has been used to mold the valve body)
(c) the nominal size in inches
(d) the direction of flow.

Copyright ASME International
Provided by IHS under license with ASME
No reproduction or networking permitted without license from IHS
Not for Resale

Copyright ASME International
Provided by IHS under license with ASME
No reproduction or networking permitted without license from IHS
Not for Resale

Copyright ASME International
Provided by IHS under license with ASME
No reproduction or networking permitted without license from IHS
Not for Resale

Copyright ASME International
Provided by IHS under license with ASME
No reproduction or networking permitted without license from IHS
Not for Resale



ISBN 0-7918-2663-5

9 780791 826638

J03503

Copyright ASME International
Provided by IHS under license with ASME
No reproduction or networking permitted without license from IHS

Not for Resale