ASME A112.19.2-2003

Revision and Consolidation of ASME A112.19.2M-1998 and ASME A112.19.6-1995

Vitreous China Plumbing Fixtures and Hydraulic Requirements for Water Closets and Urinals



The American Society of Mechanical Engineers

Copyright ASME International
Provided by IHS under license with ASME
No reproduction or networking permitted without license from IHS

Not for Resale

The American Society of Mechanical Engineers

AN AMERICAN NATIONAL STANDARD

VITREOUS CHINA PLUMBING FIXTURES AND HYDRAULIC REQUIREMENTS FOR WATER CLOSETS AND URINALS

ASME A112.19.2-2003

Revision and Consolidation of ASME A112.19.2M-1998 and ASME A112.19.6-1995

Copyright ASME International
Provided by IHS under license with ASME
No reproduction or networking permitted without license from IHS

Not for Resale

Date of Issuance: June 15, 2004

This Standard will be revised when the Society approves the issuance of a new edition. There will be no addenda issued to this edition.

ASME issues written replies to inquiries concerning interpretations of technical aspects of this Standard. Interpretations are published on the ASME Web site under the Committee Pages at http://www.asme.org/codes/ as they are issued.

ASME is the registered trademark of The American Society of Mechanical Engineers.

This code or standard was developed under procedures accredited as meeting the criteria for American National Standards. The Standards Committee that approved the code or standard was balanced to assure that individuals from competent and concerned interests have had an opportunity to participate. The proposed code or standard was made available for public review and comment that provides an opportunity for additional public input from industry, academia, regulatory agencies, and the public-at-large.

ASME does not "approve," "rate," or "endorse" any item, construction, proprietary device, or activity.

ASME does not take any position with respect to the validity of any patent rights asserted in connection with any items mentioned in this document, and does not undertake to insure anyone utilizing a standard against liability for infringement of any applicable letters patent, nor assume any such liability. Users of a code or standard are expressly advised that determination of the validity of any such patent rights, and the risk of infringement of such rights, is entirely their own responsibility.

Participation by federal agency representative(s) or person(s) affiliated with industry is not to be interpreted as government or industry endorsement of this code or standard.

ASME accepts responsibility for only those interpretations of this document issued in accordance with the established ASME procedures and policies, which precludes the issuance of interpretations by individuals.

No part of this document may be reproduced in any form,
in an electronic retrieval system or otherwise,
without the prior written permission of the publisher.

The American Society of Mechanical Engineers
Three Park Avenue, New York, NY 10016-5990

Copyright © 2004 by
THE AMERICAN SOCIETY OF MECHANICAL ENGINEERS
All rights reserved
Printed in U.S.A.

Copyright ASME International
Provided by IHS under license with ASME
No reproduction or networking permitted without license from IHS

Not for Resale

CONTENTS

Foreword v
Standards Committee Roster vi
Correspondence With the A112 Committee vii

1 General 1
2 Vitreous China Requirements 4
3 Dimensional Requirements 5
4 Flushing Devices 8
5 Performance Requirements 9
6 Markings and Installation Instructions 13
7 Vitreous China and Alternate Materials Tests 14
8 Water Closet Tests 16
9 Lavatory Overflow Test 22
10 Urinal Tests 22

Figures

1 Typical Outlet for Floor-Mounted Bottom-Outlet Water Closets 6
2 Typical Outlet Details for Rear-Outlet and Rear-Spigot-Outlet Water Closets 7
3 Bolt Hole Spacing for Wall-Mounted Water Closets 8
4 Roughing-in and Seat Bolt Requirements for Top Spud Floor-Outlet Water Closets 9
5 Roughing-in and Seat Bolt Requirements for Back Spud Floor-Outlet Water Closets 10
6 Lavatory and Bidet Supply Punchings and Outlet Details 11
7 Close-Coupled and Wall-Mounted Gravity Type Water Closet Tanks 12
8 Required Standardization of Water Supply for Testing Gravity and Flushometer-Tank Operated Type Water Closets 17
9 Required Standardization of Water Supply for Testing Flushometer-Valve Operated Type Water Closets and Urinals 18
10 Diagram Depicting Suggested Apparatus for Trap Seal Depth Determination for Water Closets and Urinals 19
11 Drainline Transport Characterization Test Assembly 21

Tables

1 Maximum Allowable Defects for Vitreous China Water Closet Bowls, Tanks, and Urinals 4
2 Maximum Allowable Defects for Vitreous China Lavatories and Drinking Fountains 5
3 Standard Sizes and Passageways for Urinals 12
4 Minimum Urinal Dimensions 12
5 Static Test Pressures for Hydraulic Performance Tests for Water Closets 13
6 Static Test Pressures for Laboratory Tests for Urinals 13

Copyright ASME International
Provided by IHS under license with ASME
No reproduction or networking permitted without license from IHS
Not for Resale

Nonmandatory Appendices

A Demonstrating Compliance to ASME A112.19.2 25
B Illustrations 26
C Government Requirements 49
D Suggested Formats for Reporting Test Results 53
E Test Materials 56
F Supplementary Purchase Specification: Discharge Adjustment Requirements for Low-Consumption Water Closets 57

--`,,```,,,,````-`-`,,`,,`,`,,`---

Copyright ASME International
Provided by IHS under license with ASME
No reproduction or networking permitted without license from IHS

Not for Resale

FOREWORD

Shortly after the release of the 1990 edition of this Standard, the A112.19.2 and 19.6 Working Groups began the work of revising this document with provisions and test requirements more appropriate for the emerging low-consumption water closet and urinal technology. The 1995 edition of ASME A112.19.6 contained a few important revisions, but was mostly a reaffirmation of the 1990 edition.

This revision contains all of the efforts of the Working Groups (now identified as a Project Team) since 1990 towards the adoption of requirements specifically developed for low-consumption plumbing fixtures.

There are also many changes in the format of the Standard. The performance requirements previously contained in ASME A112.19.6 have been relocated into this Standard. Manufacturers of water closets and urinals made from materials other than vitreous china will now be able to reference the appropriate sections contained in this Standard for their performance requirements, and it will not be necessary for interested parties to procure and reference two separate standards for vitreous china fixtures.

Primary among the changes in this revision are: a mixed-media performance test applicable to all water closets independent of their application, the consolidation of the ball test and drainline transport test, the extension of the granule test to include additional media with specific gravity greater than one, and the deletion of the water change test. Additional revisions include minor changes to the lavatory outlet that have been made such that it is consistent with related fixture standards, a performance requirement and test to determine the adequacy and performance of overflow protection within gravity toilet tanks, a nonmandatory test establishing a maximum flush volume when all field adjustments are set for maximum discharge, and new requirements for replacement parts.

The Project Team has worked diligently to improve this Standard, specifically with the addition of a waste removal test using a mixed media. However, the reader is cautioned that laboratory test results based on this or any other test protocol may not correlate to field experience with a given fixture. The Project Team's objective was to find a reusable media to simulate fecal matter and toilet paper in a test to determine the potential of a toilet to plug. Because fecal mater and paper are inconsistent, it is difficult to find a consistent reusable media. Variables include volume, tensile strength (tear resistance), friction, and compressibility. Through much experimentation, we have settled on sponges and paper balls. The Project Team realizes that they do not have a perfect correlation and there are some significant variations in attributes, primarily tensile strength and friction, and to a lesser extent volume and compressibility. However, extensive testing has shown this test to be a reliable predictor of the potential for plugging failures.

Nonmandatory Appendix F has been added to provide a basis for consistency for purchase specifications where design limitation to toilet discharge consumption is required.

This Standard is published in memory of, and dedicated to the life of, our dear friend, colleague, and long-standing industry leader, Thomas P. Konen. His contributions to the plumbing industry at large and to this Committee will never be forgotten.

This Standard was approved as an American National Standard on June 20, 2003.

Copyright ASME International
Provided by IHS under license with ASME
No reproduction or networking permitted without license from IHS
Not for Resale

ASME STANDARDS COMMITTEE A112
Standardization of Plumbing Materials and Equipment

(The following is the roster of the Committee at the time of approval of this Standard.)

OFFICERS

D. W. Viola, *Chair*
S. A. Remedios, *Vice Chair*
C. J. Gomez, *Secretary*

COMMITTEE PERSONNEL

R. H. Ackroyd, Rand Engineering
J. C. Aiello, Jacuzzi Whirlpool Bath
J. A. Ballanco, JB Engineering & Code Consulting
J. Bouwer, Sanitary for All Ltd.
M. N. Burgess, Burgess Group Inc.
S. L. Cavanaugh, United Association
A. Ciechanowski, NSF International
A. Cohen, Arthur Cohen & Associates
P. V. DeMarco, American Standard, Inc.
N. Covino, *Alternate,* American Standard, Inc.
G. S. Duren, Code Compliance, Inc.
R. Emmerson, Chicago Faucet Co.
F. C. Evans, *Alternate,* Chicago Faucet Co.
L. S. Galowin, National Institute of Standards and Technology
C. J. Gomez, The American Society of Mechanical Engineers
R. I. Greenwald, Sunroc Corp.
E. Ho, International Association of Plumbing and Mechanical Officials
D. E. Holloway, SGS U.S. Testing Co.
M. Klimboff, Consultant
M. T. Kobel, International Association of Plumbing and Mechanical Officials
N. M. Kummerlen, Moen Inc.
L. A. Mercer, *Alternate,* Moen Inc.
J. W. Lauer, Sloan Valve Co.
R. M. Martin, California Energy Commission
P. W. Meikle, P. W. Meikle Consultants
S. Rawalpindiwala, Kohler Co.
J. A. Sargent, *Alternate,* Kohler Co.
S. A. Remedios, Delta Faucet Co.
G. L. Simmons, Charlotte Pipe and Foundry
L. M. Simnick, Building Officials and Code Administrators International
W. M. Smith, Jay R. Smith Industries, Inc.
D. W. Viola, Plumbing Manufacturers Institute
R. E. White, Richard E. White & Associates
W. C. Whitehead, Plumbing & Drainage Institute

PERSONNEL OF JOINT PROJECT TEAM 19.2 (Vitreous China Plumbing Fixtures) AND 19.6 (Hydraulic Performance for Water Closets and Urinals)

T. P. Konen, *Project Team Leader,* Stevens Institute
P. V. DeMarco, *Deputy Project Team Leader,* American Standard, Inc.
F. Fernandez, *Project Team Secretary,* Toto USA, Inc.
M. J. Ament, Ament International Corp.
B. Antunez, Coast Foundry & Manufacturing Co.
J. A. Ballanco, JB Engineering & Code Consulting
J. Bouwer, Sanitary for All Ltd.
S. L. Cavanaugh, United Association
O. Dufau, Fluidmaster
L. S. Galowin, National Institute of Standards and Technology
C. R. Graham, Martech Enterprises
E. Ho, International Association of Plumbing and Mechanical Officials
D. E. Holloway, SGS U.S. Testing Co.
M. Joedicke, Friedrich Grohe
T. M. Kenney, NAHB Research Center
M. Klimboff, Consultant
M. T. Kobel, International Association of Plumbing and Mechanical Officials
J. Koeller, Koeller and Co.
N. M. Kummerlen, Moen Inc.
J. W. Lauer, Sloan Valve Co.
R. B. Martin, W/C Tech Corp.
W. P. McDonnell, Metropolitan Water District of Southern California
P. W. Meikle, P. W. Meikle Consultants
L. A. Mercer, Moen Inc.
J. Murray, Crane Plumbing
J. L. Neumann, Eljer Plumbingware
B. Pines, USA Plumbing & Sewer
B. L. Preston, Mansfield Plumbing Products
L. Radavich, Lavelle Industries, Inc.
D. Rasell, Caroma USA, Inc.
S. Rawalpindiwala, Kohler Co.
J. A. Sargent, Kohler Co.
R. L. Schnakenberg, Frugal Technologies Inc.
G. E. Shillington, Consultant
D. W. Viola, Plumbing Manufacturers Institute

--`,,```,,,,````-`-`,,`,,`,`,,`---

Copyright ASME International
Provided by IHS under license with ASME
No reproduction or networking permitted without license from IHS

Not for Resale

CORRESPONDENCE WITH THE A112 COMMITTEE

General. ASME Standards are developed and maintained with the intent to represent the consensus of concerned interests. As such, users of this Standard may interact with the Committee by requesting interpretations, proposing revisions, and attending Committee meetings. Correspondence should be addressed to:

Secretary, A112 Standards Committee
The American Society of Mechanical Engineers
Three Park Avenue
New York, NY 10016-5990

Proposing Revisions. Revisions are made periodically to the Standard to incorporate changes that appear necessary or desirable, as demonstrated by the experience gained from the application of the Standard. Approved revisions will be published periodically.

The Committee welcomes proposals for revisions to this Standard. Such proposals should be as specific as possible, citing the edition, the paragraph number(s), the proposed wording, and a detailed description of the reasons for the proposal, including any pertinent documentation. When appropriate, proposals should be submitted using the A112 Project Initiation Request Form.

Interpretations. Upon request, the A112 Committee will render an interpretation of any requirement of the Standard. Interpretations can only be rendered in response to a written request sent to the Secretary of the A112 Standards Committee.

The request for interpretation should be clear and unambiguous. It is further recommended that the inquirer submit his/her request in the following format:

Subject:	Cite the applicable paragraph number(s) and the topic of the inquiry.
Edition:	Cite the applicable edition of the Standard for which the interpretation is being requested.
Question:	Phrase the question as a request for an interpretation of a specific requirement suitable for general understanding and use, not as a request for an approval of a proprietary design or situation. The inquirer may also include any plans or drawings that are necessary to explain the question; however, they should not contain proprietary names or information.

Requests that are not in this format will be rewritten in this format by the Committee prior to being answered, which may inadvertently change the intent of the original request.

ASME procedures provide for reconsideration of any interpretation when or if additional information that might affect an interpretation is available. Further, persons aggrieved by an interpretation may appeal to the cognizant ASME Committee or Subcommittee. ASME does not "approve," "certify," "rate," or "endorse" any item, construction, proprietary device, or activity.

Attending Committee Meetings. The A112 Standards Committee schedules meetings as needed, which are open to the public. Persons wishing to attend any meeting should contact the Secretary of the A112 Standards Committee. The A112 home page contains information on future meeting dates and locations.

Copyright ASME International
Provided by IHS under license with ASME
No reproduction or networking permitted without license from IHS
Not for Resale

Copyright ASME International
Provided by IHS under license with ASME
No reproduction or networking permitted without license from IHS
Not for Resale

Vitreous China Plumbing Fixtures and Hydraulic Requirements for Water Closets and Urinals

1 GENERAL

1.1 Scope

This Standard establishes requirements and test methods pertaining to materials, significant dimensions, and functional performance for vitreous china plumbing fixtures. The sanitary performance requirements and test procedures apply to all types of water closets and urinals that discharge into gravity waste systems in permanent buildings and structures, independent of occupancy. Fixtures referenced in this Standard include water closets, lavatories, urinals, bidets, service sinks, drinking fountains, and institutional application fixtures.

1.2 Units of Measure

Where values are stated in U.S. customary units and the International System of Units (SI), the U.S. customary units shall be considered as the standard.

In this Standard, gallons (U.S. liquid) per minute is abbreviated gpm, liters per flush is abbreviated Lpf, and gallons per flush is abbreviated gpf.

1.3 References

The following is a list of publications referenced in this Standard. The latest edition of each standard shall be applied.

ANSI Z124.4, Plastic Water Closet Bowls and Tanks[1]

Publisher: International Association of Plumbing and Mechanical Officials (IAPMO), 5001 East Philadelphia Street, Ontario, CA 91761

ARI 1010, Self-Contained, Mechanically-Refrigerated Drinking-Water Coolers[1]

Publisher: Air-Conditioning and Refrigeration Institute (ARI), 4100 North Fairfax Drive, Arlington, VA 22203

ASME A112.6.1M, Floor-Affixed Supports for Off-the-Floor Plumbing Fixtures for Public Use[1]

ASME A112.6.2, Framing-Affixed Supports for Off-the-Floor Water Closets With Concealed Tanks[1]

ASME A112.18.1, Plumbing Fixture Fittings[1]

ASME A112.19.5, Trim for Water-Closet Bowls, Tanks, and Urinals[1]

ASME A112.19.12, Wall Mounted and Pedestal Mounted, Adjustable and Pivoting Lavatory and Sink Carrier Systems[1]

Publisher: The American Society of Mechanical Engineers (ASME International), Three Park Avenue, New York, NY 10016-5990; Order Department: 22 Law Drive, Box 2300, Fairfield, NJ 07007-2300

ASSE 1002, Performance Requirements for Anti-Siphon Fill Valves (Ballcocks) for Gravity Water Closet Flush Tanks

ASSE 1037, Performance Requirements for Pressurized Flushing Devices (Flushometers) for Plumbing Fixtures

Publisher: American Society of Sanitary Engineering (ASSE), 901 Canterbury Road, Westlake, OH 44145

ASTM D 3311, Standard Specification for Drain, Waste, and Vent (DWV) Plastic Fittings Patterns

Publisher: American Society for Testing and Materials, 100 Barr Harbor Drive, West Conshohocken, PA 19428-2959

ICC/ANSI A117.1, Standard on Accessible and Usable Buildings and Facilities[1]

Publisher: International Code Council (ICC), 5203 Leesburg Pike, Falls Church, VA 22041

UL 969, Marking and Labeling Systems

Publisher: Underwriters Laboratories, 333 Pfingsten Road, Northbrook, IL 60062-2096

1.4 Definitions

Definitions applicable to vitreous china plumbing fixtures shall be as follows:

air gap: the unobstructed vertical distance through the open atmosphere between the lowest opening from any pipe or fixture fitting supplying water to a tank or plumbing fixture and the flood level rim of the receptor.

bidet: a personal hygiene fixture with hot and cold water supply, intended for genital and perineal cleanliness.

blister: a raised portion of the surface not greater than $\frac{1}{8}$ in. (3 mm) in maximum dimension.

blister, large: a raised portion of the surface greater than $\frac{1}{8}$ in. (3 mm) in maximum dimension.

[1] May also be obtained from American National Standards Institute (ANSI), 25 West 43rd Street, New York, NY 10036.

Copyright ASME International
Provided by IHS under license with ASME
No reproduction or networking permitted without license from IHS
Not for Resale

blowout action: a means of flushing a water closet whereby a jet of water directed at the bowl outlet opening pushes the bowl contents into the upleg, over the weir, and into the gravity drainage system.

blowout bowl type: a blowout bowl is nonsiphonic and shall have an integral flushing rim, a trapway at the rear of the bowl, and a visible or concealed jet, and shall operate with a blowout action.

bubble: a raised portion of the surface or a sand speck smaller than $\frac{1}{32}$ in. (1 mm) in maximum dimension.

crack: a fracture in either the glaze or the body, but neither a dunt nor a craze.

craze: fine cracks in the glaze.

critical level (C/L): the level at which water will flow back into the supply lines by gravity and/or less than atmospheric pressure in the supply line.

discoloration: a colored spot over $\frac{1}{4}$ in. (6 mm) in maximum dimension, or a sufficient number of specks or spots to give the effect of a change in color.

dull or eggshell finish: dead or flat finish, undeveloped glaze, or a semiglazed finish with numerous very fine pinholes, or slightly matted in appearance, not glossy; not to be confused with a satin or matte finish used for decorative purposes.

dunt: a hairline fracture extending through the body and caused by strains set up in the process of manufacture.

exposed body: unglazed portion $\frac{1}{16}$ in. (2 mm) or more in maximum dimension.

fill valve: a water supply valve (frequently called a *ballcock*), opened or closed by means of a float or similar device, used to supply water to a tank. An antisiphon fill valve also contains an antisiphon device in the form of an approved air gap, mechanical backflow preventer (or vacuum breaker) that is an integral part of the fill valve unit and is positioned on the discharge side of the water supply control valve.

finish: texture and condition of surface other than color.

fire check: fine shallow crack in the body not covered with glaze (when covered with glaze so as to be easily cleaned, it is not detrimental).

first quality: first-class ware in conformance with the grade limitations and other requirements of this Standard. Shall also be permitted to be called "A" grade ware.

fittings: adjuncts to a fixture subject to selection or options of the purchaser, as, e.g., fixture fittings and waste plugs.

fixture: the china piece only, without trim and/or fittings.

flood level: that portion of a plumbing fixture which will spill over when the fixture drain is shut or constricted.

flow (running) pressure: the pressure in the water supply pipe at the inlet to a valve while the valve is flowing.

flush cycle: the complete operating sequence of a water closet or urinal in emptying the contents, cleaning the inside surfaces, refilling the water seal, and raising the water surface to the level of the trap weir.

flushing devices: devices such as a flush valve, flushometer tank, or flushometer valve employed in the operation of a water closet to deliver water into the water closet bowl.

flushing surface: the surface, visible after installation, that is wetted during the operation of the fixture.

flushometer tank: a device whose function is defined in *flushometer valve* below, but integrated within an accumulator vessel affixed and adjacent to the fixture inlet so as to cause an effective enlargement of the supply line immediately before the unit.

flushometer valve: a valve attached to a pressurized water supply pipe and so designed that when actuated, it opens the line for direct flow into the fixture at a rate and predetermined quantity to properly operate the fixture, and then gradually closes to provide trap reseal in the fixture and avoid water hammer. The pipe to which this device is connected is, in itself, of sufficient size that when open, it shall allow the device to deliver water at a sufficient rate of flow for flushing purposes.

flush tank (gravity type): a gravity flush tank is a flushing device that stores a specified quantity of water. When actuated, it discharges the quantity of water (plus some through-flow from the potable water supply system) into the water closet bowl or urinal by gravity. It is often a container for a measured quantity of water, fitted with a fill valve and a flush valve, and is either wall hung or close-coupled (with closet bowl).

flush valve: a special form of valve used to discharge the water from the tank into a water closet or urinal.

glaze: the smooth glass-like ceramic coating on a vitreous china surface that imparts impermeability and covers the body.

gravity water closet: a water closet designed to flush the bowl with water supplied by gravity means only.

integral: a cast or formed part of a fixture, such as a bubbler, trap, seat, or tank.

low-consumption urinal: a urinal having an average consumption of 1 gpf (3.8 Lpf) or less when tested per the test procedures contained in this Standard.

low-consumption water closet: a water closet having an average consumption of 1.6 gpf (6.0 Lpf) or less when tested per the test procedures contained in this Standard.

low-profile tank: a tank on a water closet which employs a flush device that is below the flood level of the water closet bowl.

Copyright ASME International
Provided by IHS under license with ASME
No reproduction or networking permitted without license from IHS
Not for Resale

permanent markings: permanent shall mean fired, cast, sandblasted, etched, stamped, or otherwise not removable except by excessive work or extraordinary means.

pinhole: a small hole in the glazed surface up to and including $\frac{1}{16}$ in. (2 mm) in maximum dimension.

pit: a hole in the glazed surface larger than $\frac{1}{16}$ in. (2 mm) in diameter.

polishing mark: a spot not larger than $\frac{3}{8}$ in. (10 mm) in maximum dimension where some minor blemish has been removed by polishing.

pottery square: a square 2 in. (50 mm) on each side. For grading purposes, it shall be a 2 in. (50 mm) square hole cut in a small sheet of any flexible material, such as rubber or paper, for convenience in sliding over irregular surfaces to determine segregation.

pressurized flushing device: a product which uses the water supply to create a pressurized discharge to flush fixtures and which is exclusive of gravity-type flushing systems. Flushometer valves, flushometer tanks, and electronically controlled pressurized devices are examples of pressurized flushing devices (see ASSE 1037).

rim: the unobstructed open edge of a fixture.

roughing-in measurement: dimensions from finished wall or floor to center of waste or supply opening or mounting holes.

sanitary: for the purposes of this Standard, indicates an aesthetic condition of cleanliness, not microbiologically clean.

segregation: more than the allowable number of defects in a pottery square.

siphonic action: the movement of water through a water closet bowl that creates a siphon to remove waste material.

siphonic bowl type: a siphonic bowl shall have an integral flushing rim, a trapway at the front or rear of the bowl, and a floor or wall outlet, and operate with a siphonic action with or without a jet.

speck: an area of contrasting color less than $\frac{1}{32}$ in. (1 mm) in maximum dimension. Specks less than $\frac{1}{100}$ in. (0.3 mm) in maximum dimension, unless in sufficient number to form a discoloration, are not counted.

spot: an area of contrasting color $\frac{1}{32}$ in. (1 mm) up to and including $\frac{1}{8}$ in. (3 mm) in maximum dimension.

spot, large: an area of contrasting color greater than $\frac{1}{8}$ in. (3 mm) in maximum dimension.

spud: a threaded waterway assembly inserted into the fixture for assembly of valves or trim.

static pressure: the pressure at the inlet to a valve that is exerted under a "no flow" condition.

tank fill time: the time beginning at the instant the tank flush valve closes and ending at the instant the water supply valve is completely shut off.

trap: a fitting, device, or integral fixture portion so designed and constructed as to provide a liquid seal which will prevent the back-passage of sewer gas without materially affecting the flow of sewage or wastewater through it.

trap dip: the highest point of the opening from the well into the trapway.

trap seal depth: the vertical depth of water between the highest part of the lower interior surface of a trap, or, if applicable, the top edge of a jet opening, whichever is higher, and the trap weir.

trim: parts other than china regularly supplied with a fixture, as, e.g., closet spuds, wall hangers, and tank flush valves. Trim shall not include fittings (see ASME A112.19.5).

urinal: a plumbing fixture that receives only liquid body wastes and, on demand, conveys the waste through a trap seal into a gravity drainage system.

visible after installation: any surface that remains visible after the fixture has been installed, not necessarily from a normal standing position.

visible surface: the surface that is readily visible to an observer in a normal standing position after installation of the fixture.

vitreous china: as applied to plumbing fixtures (≤ 0.5% absorption), compounded of ceramic materials fired at high temperature to form a nonporous body, with exposed surfaces coated with ceramic glaze fused to the body.

warpage: a defect in a fixture resulting in a concave or convex gap between the fixture and the adjacent wall or floor.

washdown bowl type (also known as *washout*): a washdown bowl shall have an integral flushing rim and a floor or wall outlet, and primarily operates with a nonsiphonic action.

water closet: a plumbing fixture having a water-containing receptor that receives liquid and solid body waste and, upon actuation, conveys the waste through an exposed integral trap seal into a gravity drainage system.

water-saving water closet: a water closet having an average consumption over 1.6 gpf (6.0 Lpf) but not exceeding 3.5 gpf (13.2 Lpf) when tested per the test procedures contained in this Standard.

water surface: the surface of the still water in the well of the fixture when the trapway is filled to the trap weir.

wavy finish: a defect in the finish having the appearance of numerous runs in the glaze, irregular or mottled.

weir: the barrier in a trapway that controls the water level.

Copyright ASME International
Provided by IHS under license with ASME
No reproduction or networking permitted without license from IHS
Not for Resale

Table 1 Maximum Allowable Defects for Vitreous China Water Closet Bowls, Tanks, and Urinals

Location	Defect	Maximum Permitted
Bowls	Water closet warpage:	
	foot/wall, bow, or arch	1/8 in. (3 mm) max.
	rocker	1/16 in. (1.5 mm) max.
	top, both directions	1/4 in./ft (6 mm/m) max.
	Fire checks	None
	Wavy finish	Not more than 4 in.^{2} (2 600 mm^2)
	Pits, blisters, and pinholes	A total of not over 5
	Bubbles, specks, and spots	Not over 5 in one pottery square, a total of not over 10
	Exposed body	None
Tanks, covers, and urinals	Warpage	Not noticeably warped
	Exposed body	None
	Wavy finish	Not more than 4 in.^{2} (2 600 mm^2)
	Pits, blisters, and pinholes	A total of not over 5
	Bubbles, specks, and spots	Not over 5 in one pottery square, a total of not over 10

well: a pocket open at the top, formed inside a water closet bowl or urinal at the entrance to the trapway.

2 VITREOUS CHINA REQUIREMENTS

2.1 Absorption

The average absorption of the ceramic test samples shall not exceed 0.5% when tested in accordance with para. 7.1.

2.2 Crazing

No crazing shall be permitted when samples are tested in accordance with para. 7.2.

2.3 Thickness

Vitreous china shall not be less than 1/4 in. (6 mm) thick at any point, exclusive of glaze.

2.4 Warpage

Vitreous china fixtures shall meet the warpage requirements listed in Table 1 or 2 when tested in accordance with para. 7.3.

2.5 Glazed Surfaces

The glaze shall be thoroughly fused to the fixture body. All exposed surfaces shall be glazed, except those surfaces that are designed to come into contact with walls or floors, and except as follows:

(a) water closets

(1) the inside, back and underside of a water closet tank

(2) the underside of the tank lid

(3) the underside of the flushing rim

(4) a section of the flushing surface not to exceed 1/4 in. (6 mm) below the flushing rim

(5) all areas of the trapway not visible after installation

(b) lavatories

(1) the backs of lavatories set away from walls

(2) the backs of overflows

(3) the underside of outlet bosses

(4) undersides of drop-in lavatories

(5) back sides of lavatory legs and pedestals

(6) mounting rim on undercounter lavatories

(c) bidets

(1) the underside of the flushing rim

(2) a section of the flushing surface not to exceed 1/4 in. (6 mm) below the flushing rim

(3) the backside and underside of the pedestal

Other fixtures shall be permitted to have unglazed areas where the fixture is supported in the kiln, as long as such areas are not visible surfaces.

2.6 Finish

All vitreous china fixtures shall be free from defects to the extent specified in Table 1 or 2, as applicable, when evaluated in accordance with para. 7.4.

2.7 Component Material Requirements

2.7.1 Alternate Material Components. When alternate materials are used as components within a water closet, the assembly shall conform to applicable material standards for the plumbing application. They shall satisfy this Standard regarding quality, strength, effectiveness, durability, and safety. They shall also be repairable or replaceable within the vitreous china fixture.

2.7.2 Alternate Materials in Trapways. Where alternate materials are used in a water closet bowl trapway, the trapway shall comply with the requirements of the auger test specified in para. 7.5.

Copyright ASME International
Provided by IHS under license with ASME
No reproduction or networking permitted without license from IHS
Not for Resale

Table 2 Maximum Allowable Defects for Vitreous China Lavatories and Drinking Fountains

Location	Defect	Maximum Permitted
General	Warpage	Warpage of flat slab out of horizontal plane shall not exceed $\frac{1}{4}$ in./ft (6 mm/m) on all sizes; warpage on backs of lavatories that are attached to wall shall not exceed $\frac{1}{8}$ in. (3 mm)
	Warpage of self-rimming lavatories	$\frac{1}{8}$ in. (3 mm) at any point
Service space, top of slab	Spots, blisters, and pinholes	No segregation, a total of not more than 2
Inside of bowl and front of apron	Bubbles and specks	No segregation, a total of not more than 4
Face of integral back and side	Spots, blisters, and pinholes	Not more than 1 on back or on either side, a total of not more than 3
	Bubbles or specks	No segregation, a total of not more than 4

2.7.3 Insulated Tanks. Tanks that do not exhibit condensation when tested in accordance with para. 7.6 shall be considered as insulated.

2.8 Load Tests for Wall-Mounted Fixtures

2.8.1 Load Test for Water Closets. All wall-mounted water closets shall withstand a load of 500 lbf (2.2 kN) when tested in accordance with para. 7.7.1.

2.8.2 Load Test for Lavatories. All wall-mounted lavatories shall withstand a load of 250 lbf (1.1 kN) when tested in accordance with para. 7.7.2.

2.8.3 Load Test for Urinals. All wall-mounted urinals shall withstand a load of 50 lbf (0.22 kN) when tested in accordance with para. 7.7.3.

2.8.4 Off-the-Floor Fixture Supports. Fixture supports, when required, shall comply with ASME A112.6.1M, ASME A112.6.2, or ASME A112.19.12.

3 DIMENSIONAL REQUIREMENTS

3.1 Tolerances and Dimensions

Vitreous china fixtures shall conform to the applicable dimensions and tolerances given herein. Where not otherwise indicated, tolerances on dimensions of 8 in. (200 mm) and larger shall be ±3%. Tolerances on dimensions less than 8 in. (200 mm) shall be ±5%. Minimum and maximum dimensions given herein (where stated as *minimum* and/or *maximum*) shall not be subjected to a tolerance beyond the limits given. Where dimensional ranges are specified and the words *minimum* and/or *maximum* do not appear, the upper and lower ranges shall not be considered critical and the appropriate tolerances shall apply. All mandatory dimensional requirements shall be as referenced in the body of this document.

3.2 Water Closets

3.2.1 Outlet Configurations. Outlet configurations shall conform to the dimensions shown in

(a) Figure 1 for floor-mounted bottom-outlet water closets or

(b) Figure 2 for rear-outlet and rear-spigot-outlet water closets

3.2.2 Nonstandard Outlet Configurations. When an outlet configuration requires a connection other than a closet flange and ring, this connection shall not leak when tested in accordance with para. 7.8 and shall be of a design that allows for field repair or replacement.

3.2.3 Mounting Details. The mounting details of wall-mounted water closet bowls shall conform to the dimensions shown in Fig. 3, sketches (a), (b), and (c), for siphonic type bowls, blowout type bowls, and two-bolt designs, respectively. All mounting bolt hole diameters for wall-mounted water closets shall be $\frac{7}{8}$ in. (22 mm) minimum. Elongated bolt holes for accommodating older fixture supports shall also be permitted.

3.2.4 Roughing-in Details. Water closet outlets shall rough-in at 10, 12, or 14 in. (254, 305, or 356 mm), or as specified in the manufacturer's installation instructions. See Figs. 4 and 5.

3.2.5 Toilet Seat Hole Details. Standard water closet seat holes shall be configured as detailed in Figs. 4 and 5. This requirement shall not be applied where proprietary seats are supplied by the manufacturer.

3.3 Trap Seal Depth

The trap seal depth for water closet bowls and urinals shall not be less than 2 in. (50 mm) when determined in accordance with para. 8.2.

3.4 Water Surface Area

A water closet bowl shall have a water surface area of 5 × 4 in. (125 × 100 mm) minimum, as measured on a flat and level surface.

3.5 Ball Pass Diameter

The trapway of a water closet bowl shall pass a $1\frac{1}{2}$ in. (38 mm) minimum diameter solid ball.

Copyright ASME International
Provided by IHS under license with ASME
No reproduction or networking permitted without license from IHS
Not for Resale

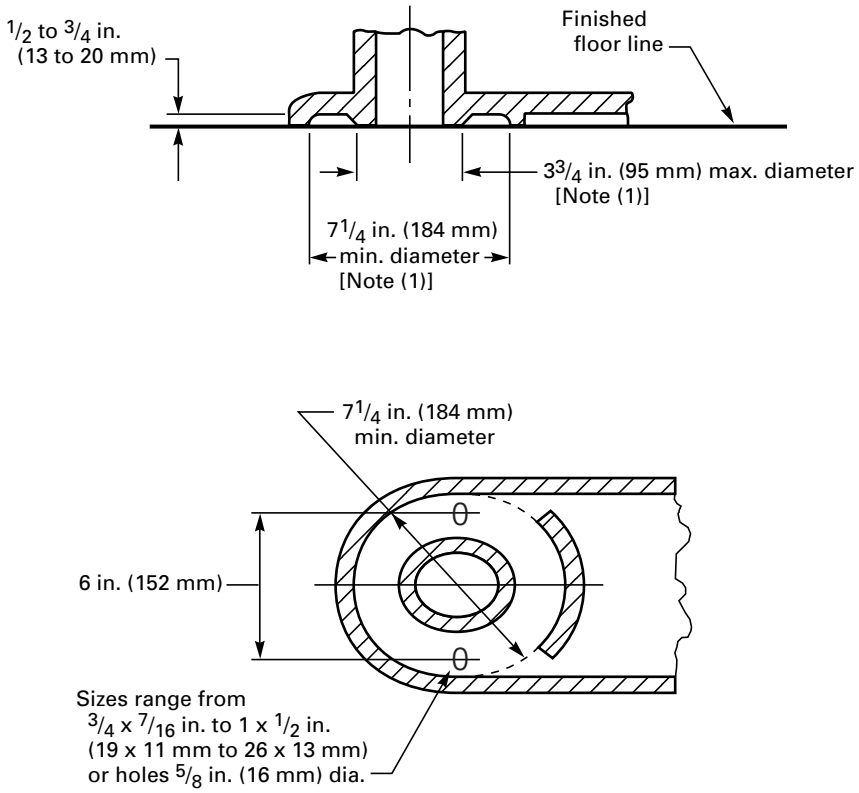

GENERAL NOTES:

(a) See para. 3.2.1.

(b) The illustration is not intended to restrict design of the bowl base, provided dimensions critical to interchangeability are maintained.

NOTE:

(1) Dimensions are measured at base of fixture.

Fig. 1 Typical Outlet for Floor-Mounted Bottom-Outlet Water Closets

3.6 Spud Sizes

The standard sizes for spuds on fixtures shall be as follows:

(a) 1½ or 1¼ in. for water closet bowls operated by flushometer valves

(b) 1¼, 1½, or 2 in. for water closet bowls operated by wall-mounted flush tanks

(c) 1½, 1¼, or ¾ in. for urinals operated by flushometer valves

(d) 1½ in. for clinic sinks operated by flushometer valves

Other spud dimensions shall comply with the requirements of ASME A112.19.5.

Spuds for water closets shall be located as specified in Figs. 4 and 5.

3.7 Water Closet Bowl Heights

The following bowl heights shall be as defined.

3.7.1 Adult Water Closet. An adult water closet shall have a rim height of 13½ in. (343 mm), minimum.

3.7.2 Juvenile Water Closet. A juvenile water closet shall have a rim height of 10½ to 13½ in. (267 to 343 mm).

3.7.3 Child's Water Closet. A child's water closet shall have a rim height of 9½ to 10½ in. (241 to 267 mm).

3.7.4 Accessible Fixtures. Vitreous china plumbing fixtures designed to be accessible shall comply with the dimensional specifications in ICC/ANSI A117.1.

3.8 Lavatories

3.8.1 Punchings. When fittings are not provided with the fixture, lavatory supply and outlet punchings shall comply with Fig. 6.

3.8.2 Flood Levels. The flood level of the slab shall be not more than ½ in. (13 mm) above the slab surface at the lowest point of the faucet bearings.

3.8.3 Wall-Hung Commercial Lavatories. Wall-hung commercial lavatories shall be provided with punchings that comply with the support dimensions in ASME A112.6.1M.

Copyright ASME International
Provided by IHS under license with ASME
No reproduction or networking permitted without license from IHS
Not for Resale

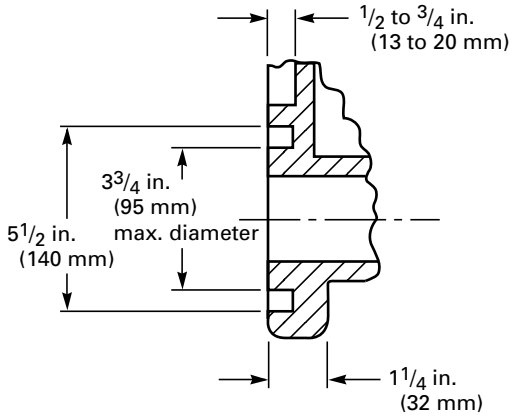

(a) Wall-Mounted Rear-Outlet Water Closet Bowl

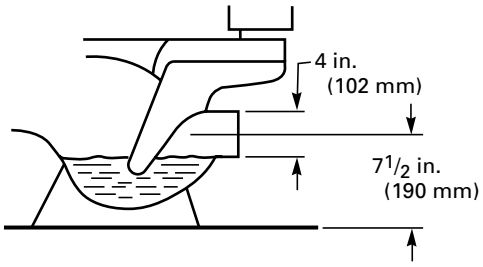

(c) Floor-Mounted Rear-Spigot-Outlet Water Closet Bowl

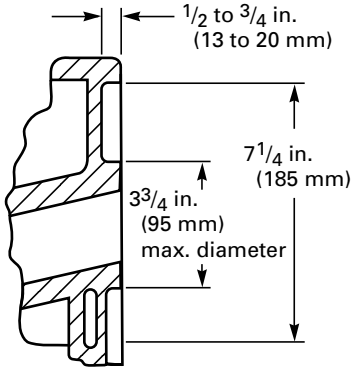

(b) Floor-Mounted Rear-Outlet Water Closet Bowl

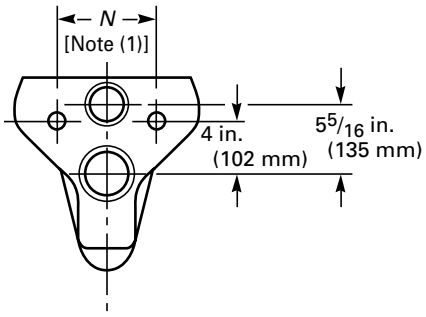

(d) Wall-Mounted Rear-Outlet Washdown Bowl

GENERAL NOTE: See para. 3.2.1.

NOTE:

(1) $N = 7$ or $8\frac{15}{16}$ in. (178 or 226 mm).

Fig. 2 Typical Outlet Details for Rear-Outlet and Rear-Spigot-Outlet Water Closets

Copyright ASME International
Provided by IHS under license with ASME
No reproduction or networking permitted without license from IHS

Not for Resale

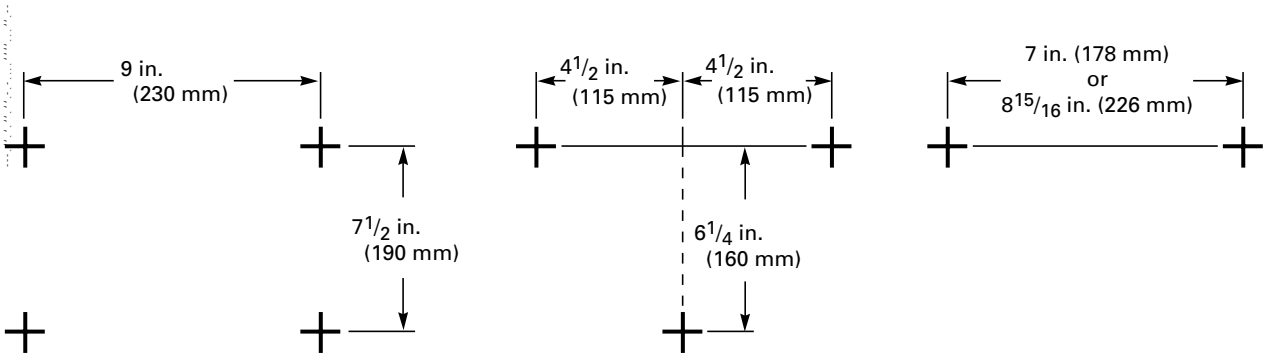

(a) Siphonic Type, Four Holes (b) Blowout Type, Three Holes (c) Washdown Type, Two Holes

GENERAL NOTE: See para. 3.2.3.

Fig. 3 Bolt Hole Spacing for Wall-Mounted Water Closets

3.9 Urinals

3.9.1 Trapway Urinals shall have a trapway which shall pass a $\frac{3}{4}$ in. (19 mm) minimum diameter ball, except where larger diameters are specified for certain urinal types in Table 3.

3.9.2 Urinal Sizes. Minimum urinal dimensions shall be as specified in Table 4.

3.10 Drinking Fountains

Drinking fountains shall have an integral bowl with beveled or rounded corners or edges and be designed for minimal splashing of water. Fixtures shall be permitted to have integral strainers. The nozzle head base shall be above the level of the overflow point of the bowl rim. Drinking fountain fittings shall comply with the applicable requirements of ASME A112.18.1 and ARI 1010.

3.11 Bidets

3.11.1 Bidet Sizes. Bidets shall have a rim height of 14 to 16 in. (356 to 406 mm) and a variable rough-in based upon the fitting used.

3.11.2 Bidet Punchings. Bidets shall be configured to allow the installation of either wall- or deck-mounted bidet fittings. When fittings are not provided with the fixture, bidet supply and outlet punchings shall comply with Fig. 6.

3.11.3 Bidet Flood Levels. Bidets, relying on an airgap for backflow protection, shall have a flood level not more than $\frac{1}{2}$ in. (13 mm) above the lowest point of the faucet bearing.

4 FLUSHING DEVICES

4.1 Requirements for Flushing Devices

All flushing devices shall deliver water at a sufficient rate and quantity to permit the fixture to meet the performance requirements of this Standard. Gravity flush tanks, pressurized flushing devices, and other flushing methods shall be permitted. Air gaps, vacuum breakers, and other backflow preventers shall be installed above the overflow or flood level of the fixture or device, or spill openings to the outside of the flush tank shall be provided as required in para. 4.2.

4.2 Gravity Flush Tanks

Trimmed gravity flush tanks for water closets and urinals shall include an antisiphon fill valve complying with ASSE 1002. Each tank shall have provisions for overflow. The critical level (*C/L*) mark on the fill valve shall be 1 in. (25 mm) minimum above the overflow in the tank. Water closet flush tank punchings shall conform to the dimensions shown in Fig. 7.

Where the critical level of the fill valve in low-profile tank water closets is below the flood level of the rim, auxiliary spill openings shall be provided so that the water in the tank will exit to the floor if the overflow is clogged or the trap is blocked. The size and position of these openings shall be such that with the fill valve at the full open position and the water pressure at code maximum, no water shall rise to the critical level of the fill valve.

4.3 Pressurized Flushing Devices

Pressurized flushing devices shall comply with ASSE 1037. The critical level (*C/L*) of the lowest antisiphon device within a flushometer-tank activated water closet shall be 1 in. (25 mm) minimum above the flood level of the water closet rim.

Where the critical level of the pressurized flushing device in low-profile tank water closets is below the flood level of the rim, auxiliary spill openings shall be provided so that the water in the tank will exit to the floor if the overflow is clogged or the trap is blocked. The size and position of these openings shall be such that with the fill valve for the pressurized flushing device at the full open position and the water pressure at code maximum, no water shall rise to the critical level of the pressurized flushing device.

Copyright ASME International
Provided by IHS under license with ASME
No reproduction or networking permitted without license from IHS Not for Resale

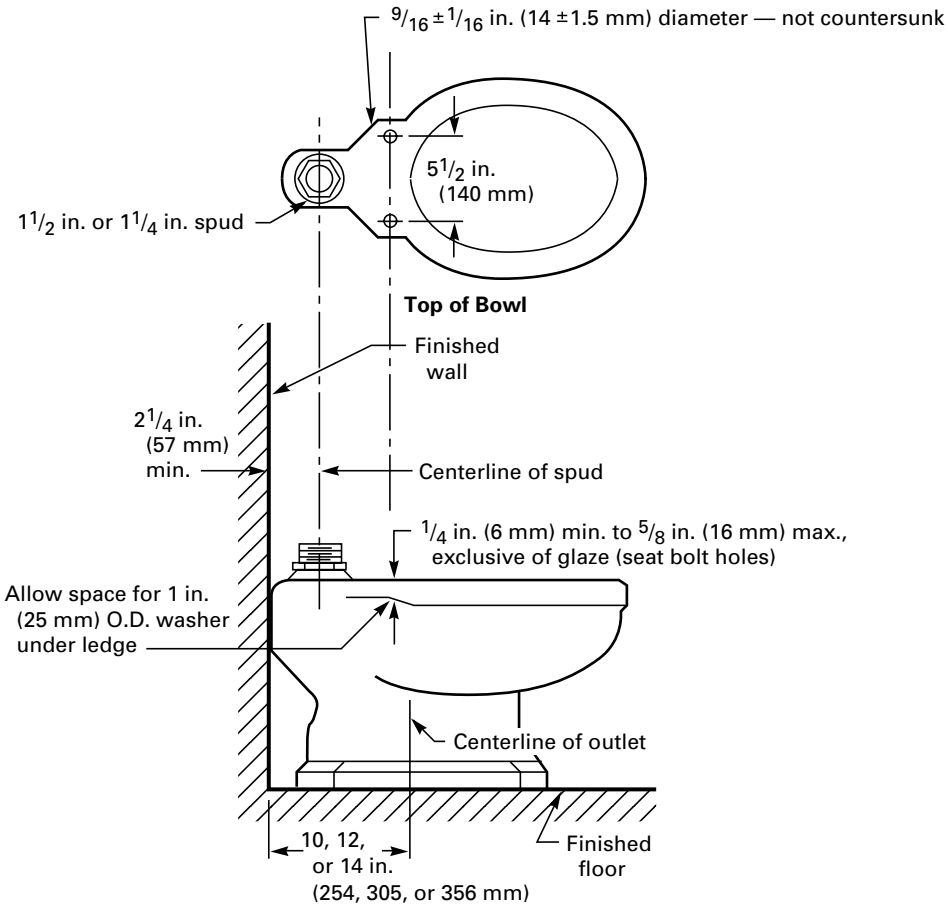

GENERAL NOTE: See paras. 3.2.4 and 3.2.5.

Fig. 4 Roughing-in and Seat Bolt Requirements for Top Spud Floor-Outlet Water Closets

4.4 Plastic Water Closet Tanks

Plastic water closet tanks intended for use with vitreous china bowls shall comply with the requirements of ANSI Z124.4.

5 PERFORMANCE REQUIREMENTS

The purpose of this paragraph is to define hydraulic performance tests for water closets, urinals, and lavatories that discharge into gravity waste systems in permanent buildings and structures. The test protocols in para. 8 shall be followed to determine compliance to this Standard.

Details regarding the procurement of the specified test media appear in Appendix E.

5.1 Water Closets

5.1.1 Performance Requirements. Water closets shall be tested at the test pressures specified in Table 5, or at the manufacturer's recommended minimum pressure. In no case shall the higher test pressure specified in Table 5 [80 psi (550 kPa)] be substituted. If the manufacturer's recommended minimum pressure is higher than those shown in Table 5, the manufacturer's literature, packaging, and installation instructions shall be marked with the minimum recommended pressure.

5.1.2 Trap Seal Restoration. Water closets shall restore a residual trap seal of not less than 2 in. (50 mm) minimum when tested in accordance with para. 8.3.

5.1.3 Water Consumption. Water closets shall have an average maximum consumption of 1.6 gpf (6 Lpf) for low-consumption water closets or 3.5 gpf (13.2 Lpf) for blowout water closets, when tested in accordance with para. 8.4.

5.1.4 Granule and Ball Test. In order to comply with this Standard, not more than 125 polyethylene granules and not more than five $\frac{1}{4}$ in. (6.4 mm) diameter balls shall be visible after each of three initial flushes when the water closet is tested in accordance with para. 8.5.

5.1.5 Surface Wash Test. For the line drawn at 1 in. (25 mm) below the rim holes, the total length of ink line

Copyright ASME International
Provided by IHS under license with ASME
No reproduction or networking permitted without license from IHS
Not for Resale

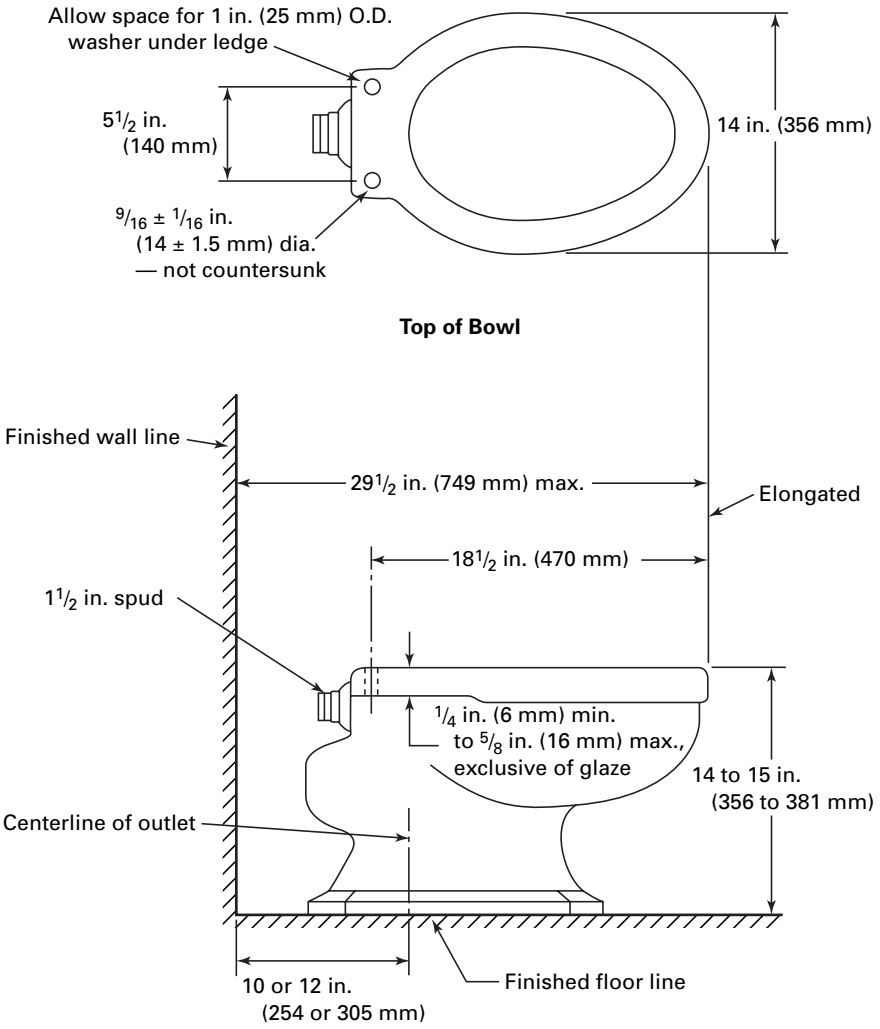

GENERAL NOTE: See paras. 3.2.4 and 3.2.5.

Fig. 5 Roughing-in and Seat Bolt Requirements for Back Spud Floor-Outlet Water Closets

segments remaining on the flushing surface after each flush shall not exceed 2 in. (50 mm) as averaged over three test runs. No individual segment shall be longer than ½ in. (13 mm) based on the average of three test runs when tested in accordance with para. 8.6.

5.1.6 Mixed Media. All water closets shall discharge 22 mixed media (any combination of sponges and/or paper balls) based on the average of three of the four test runs when tested in accordance with para. 8.7.

5.1.7 Drainline Transport Characterization. The average carry distance shall be a minimum of 40 ft (12.2 m) when tested in accordance with para. 8.8.

5.1.8 Adequacy of Overflow Device in Gravity Tanks. The overflow device in gravity tanks shall be capable of fully discharging the full open flow of the fill valve when tested in accordance with para. 8.9. This provision shall become effective 18 months after publication of this Standard.

5.1.9 Operating Pressures. For safe and efficient operation, static pressures of water distribution systems at plumbing fixtures shall be not less than 20 psig (140 kPa gauge) for low-consumption gravity and flushometer tank closets and not less than 35 psig (240 kPa gauge) for low-consumption flushometer valve activated closets, or not less than 45 psig (310 kPa gauge) for blowout-type water saver flushometer valve activated closets.

5.1.10 Maximum Safe Operating Pressure. Manufacturer's specifications shall be followed for all water closets. Maximum water pressure shall be no more than 80 psig (550 kPa gauge) static. Higher pressures could result in unsafe conditions.

Copyright ASME International
Provided by IHS under license with ASME
No reproduction or networking permitted without license from IHS
Not for Resale

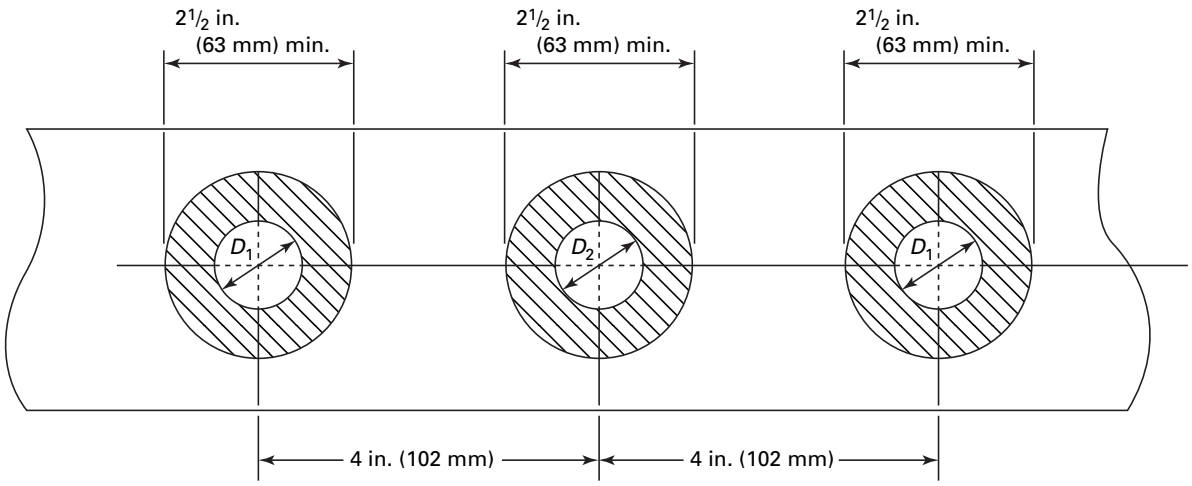

(a) Openings and Flat Surrounding Areas for Standard Combination Fittings [Notes (1) – (3)]

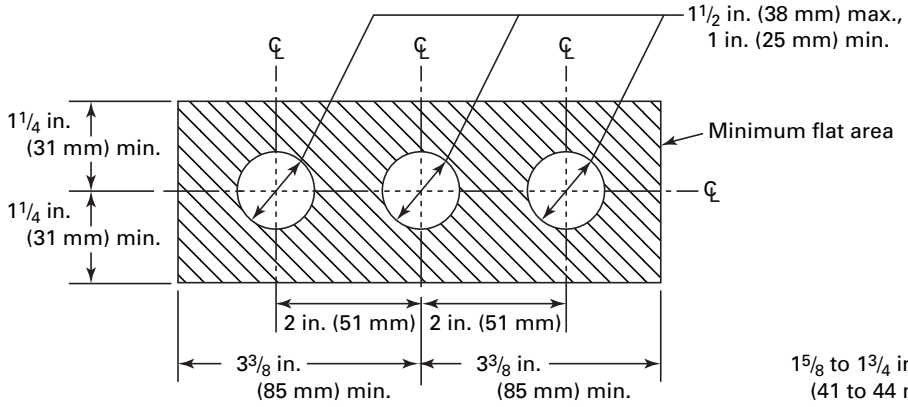

(b) Openings and Flat Surrounding Areas for Standard Center-Set Fittings

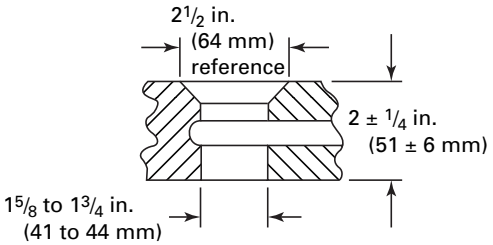

(c) Lavatory and Bidet Outlet Detail

GENERAL NOTE: See paras. 3.8.1 and 3.11.2.

NOTES:

(1) $1\frac{1}{4}$ in. (31 mm) $\leq D_1 \leq 1\frac{1}{2}$ in. (38 mm).

(2) 1 in. (25 mm) $\leq D_2 \leq 1\frac{1}{2}$ in. (38 mm).

(3) Faucet holes not required to be in a straight line.

Fig. 6 Lavatory and Bidet Supply Punchings and Outlet Details

Copyright ASME International
Provided by IHS under license with ASME
No reproduction or networking permitted without license from IHS

Not for Resale

Table 3 Standard Sizes and Passageways for Urinals

Urinals	Inlet Spud, in.-IPS	Outlet Spud, in.-IPS	Ball Minimum Diameter, in. (mm)
Stall	3/4	Note (1)	. . .
Blowout	3/4, 1 1/4, or 1 1/2	2 or 3	3/4 (19)
Siphon jet	3/4 or 1 1/4	2	7/8 (23)
Washdown	3/4	1 1/2 or 2	7/8 (23)

GENERAL NOTE: See para. 3.9.1.

NOTE:

(1) See Fig. B17 for details.

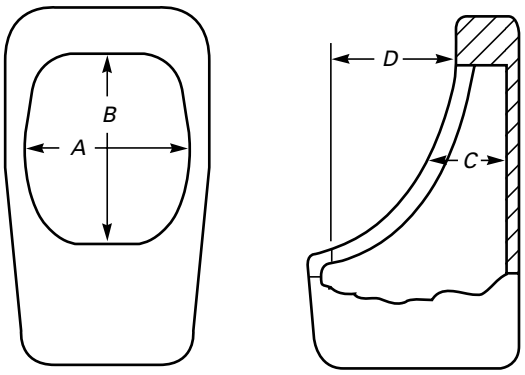

Table 4 Minimum Urinal Dimensions

Type	Interior Width, *A* [Note (1)]	Interior Height, *B*	Interior Depth, *C* [Note (1)]		Projection, *D*	
			Without Shields	With Shields	Regular	Exterior Lip
Wall-hanging type	8 1/2 in. (216 mm)	7 1/2 in. (191 mm)	3 in. (76 mm)	7 in. (178 mm)	6 in. (152 mm)	8 in. (203 mm)
Stall type	12 in. (305 mm)	32 in. (813 mm)	3 in. (76 mm)	7 in. (178 mm)	6 in. (152 mm)	8 in. (203 mm)

GENERAL NOTE: See para. 3.9.2.

NOTE:

(1) *A* and *C* shall be measured halfway between the top and bottom of the interior opening.

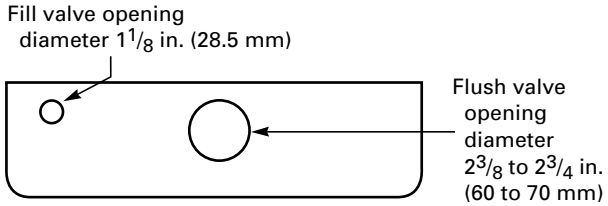

Top View

GENERAL NOTES:

(a) See para. 4.2.

(b) Fill valve opening shall be allowed on either side of tank.

(c) Alternative flush valve hole sizes and locations shall be permitted.

Fig. 7 Close-Coupled and Wall-Mounted Gravity Type Water Closet Tanks

Copyright ASME International
Provided by IHS under license with ASME
No reproduction or networking permitted without license from IHS Not for Resale

Table 5 Static Test Pressures for Hydraulic Performance Tests for Water Closets

Test Order [Note (1)]	Paragraph	Test	Gravity and Flushometer-Tank Water Closets	Flushometer-Valve Water Closets	
				Siphonic Type	Blowout Type
1	8.4	Flush volume, cycle time, and trap seal	80 psig (550 kPa), 50 psig (350 kPa), and 20 psig (140 kPa)	80 psig (550 kPa) and 35 psig (240 kPa)	80 psig (550 kPa) and 45 psig (310 kPa)
2	8.5	Granule	20 psig (140 kPa)	35 psig (240 kPa)	45 psig (310 kPa)
3	8.6	Surface wash	20 psig (140 kPa)	35 psig (240 kPa)	45 psig (310 kPa)
4	8.7	Mixed media	20 psig (140 kPa)	35 psig (240 kPa)	45 psig (310 kPa)
5	8.8	Transport	20 psig (140 kPa)	35 psig (240 kPa)	45 psig (310 kPa)

GENERAL NOTES:

(a) Where a higher minimum operating pressure is required for a fixture by a manufacturer, that minimum pressure shall be substituted for the minimum test pressure indicated above. This minimum operating pressure shall be required to be placed on the product literature and product packaging.

(b) Gravity and flushometer-tank water closets shall include siphonic, pressure-assist (other than flushometer-valve models), and washout bowl types.

NOTE:

(1) All tests shall be performed in the order listed in this Table. Adjustments to tank trim components shall be permitted only when changes to test pressures are indicated. No adjustments shall be allowed between tests employing like pressures. For water closets with alternate materials in trapway, the auger test (para. 7.5) shall be conducted prior to conducting the tests in this Table.

5.2 Lavatory Overflows

When provided, overflows shall have a minimum flow capacity of 2.2 gpm (8.3 L/min) when tested in accordance with para. 9.

5.3 Urinals

5.3.1 Performance Requirements. Urinals shall be tested at the test pressures specified in Table 6 or at the manufacturer's recommended minimum pressure. In no case shall the higher test pressure specified in Table 6 for water consumption testing [80 psi (550 kPa)] be substituted. If the manufacturer's recommended minimum pressure is higher than those shown in Table 6, the manufacturer's literature, packaging, and installation instructions shall be marked with the minimum recommended pressure.

5.3.2 Trap Seal Restoration. Urinals shall restore a residual trap seal of not less than 2 in. (50 mm) minimum when tested in accordance with para. 10.3.

5.3.3 Ink Test. The total length of ink line segments remaining on the flushing surface after each flush shall not exceed 1 in. (25 mm). No individual segment shall be longer than ½ in. (13 mm) based on the average of the three test runs, when tested in accordance with para. 10.4.

5.3.4 Dye Test. A dilution ratio of at least 100:1 shall be obtained in each of three initial flushes when the urinal is tested in accordance with para. 10.5.

5.3.5 Water Consumption. Urinals shall have an average maximum consumption of 1 gpf (3.8 Lpf) when tested in accordance with para. 10.6.

Table 6 Static Test Pressures for Laboratory Tests for Urinals

Paragraph	Test	Pressure(s), psi (kPa)
10.4	Ink test	25 (175)
10.5	Dye test	25 (175)
10.6	Water consumption	25, 80 (175, 550)

6 MARKINGS AND INSTALLATION INSTRUCTIONS

6.1 Permanent Markings on Product

Each fixture meeting this Standard, or each fixture component, if the fixture is comprised of two or more components, except for pedestal lavatories, shall be permanently marked as required by this paragraph. Acceptable means of applying permanent markings shall include fired on, etching, sand blasting, stamping with a permanent (non-water soluble) ink, and cast in markings. Adhesive labels that comply with UL 969 shall also be considered permanent when installed on areas of the fixture that are not normally submerged in water. The exposure conditions contained in para. 7.1 of UL 969 shall apply, along with the additional exposure to the detergent test specified in table 7.4 of UL 969.

6.1.1 Manufacturer's Name. The manufacturer's name or registered trademark, or, in the case of private labeling, the name of the customer for whom the fixture was manufactured, shall be applied so as to be legible, readily identified, and located so as to be visible after installation.

Copyright ASME International
Provided by IHS under license with ASME
No reproduction or networking permitted without license from IHS
Not for Resale

6.1.2 Model Number. The model number of each water closet, or bowl and tank model numbers in the case of close-coupled water closets, shall be applied so as to be legible and located so as to be visible after installation.

6.1.3 Date of Manufacture. The date of manufacture (casting date) shall be applied so as to be legible.

6.1.4 Water Consumption. Each water closet and urinal shall be marked, identifying the water consumption of the fixture. This disclosure shall be expressed in terms of gallons and liters per flush [1.6 gpf (6.0 Lpf) for low-consumption water closets, 3.5 gpf (13.2 Lpf) for water-saving water closets, 1.0 gpf (3.8 Lpf) for urinals] and shall be located in close proximity to the manufacturer's name or registered trademark.

6.1.5 Water Level Mark in Gravity Flush Tank Water Closets. Each gravity flush tank shall be permanently marked by the manufacturer with a water level mark. This mark shall be applied to the vitreous body in the tank, the tank liner, or the flush-valve overflow tube. The vertical distance between the water level mark and the lowest point of the tank overflow channel shall not exceed $1\frac{1}{2}$ in. (38 mm).

6.2 Nonpermanent Markings on Products

Each fixture shall be marked by the manufacturer with the designation "Complies with ASME A112.19.2" to signify compliance with this Standard. These markings shall not be required to be permanent, but shall be visible after installation. These markings shall be intended for removal by the occupant only and shall so state. In the case of close-coupled water closets, all nonpermanent markings shall only be required to be applied on either the tank or the bowl.

6.3 Marking Requirements for Product Packaging

All packaging for vitreous plumbing fixtures shall be marked with the manufacturer's name or registered trademark, or, in the case of private labeling, the name of the customer for whom the fixture was manufactured, and the model number of the fixture. For water closets and urinals, the appropriate water consumption, expressed in terms of gallons and liters per flush, as detailed in para. 6.1.4, shall also be conspicuously marked on all packaging.

6.4 Installation Instructions

The manufacturer shall provide installation instructions with all water closets except flushometer valve fixtures. In the case of close-coupled water closets, installation instructions shall be provided with either the bowl or the tank. Installation instructions shall include care and maintenance information.

6.5 Repair Parts

The manufacturer shall supply information to enable the end user to obtain repair parts. This information shall also advise the end user on the procurement of parts that retain the original flush volume. This information shall be located within the tank or provided in the printed information.

7 VITREOUS CHINA AND ALTERNATE MATERIALS TESTS

7.1 Absorption (Boiling) Test (See Para. 2.1)

(a) The test sample shall be comprised of three fragments taken from the test fixture, each fragment having been in contact with the kiln furniture at some point on its surface. In the case of retesting or recertification, vitreous samples taken from the same day's scrapped production shall be allowed to avoid the necessity of destroying a finished product. Each fragment shall have approximately 5 in.^{2} (3 200 mm^2) of unglazed surface area and thickness of not more than $\frac{5}{8}$ in. (16 mm). The pieces shall be dried to a constant weight at 230 ± 9°F (110 ± 5°C), and shall be stored in a desiccator until cooled to room temperature. After reaching room temperature, each specimen shall be weighed on a balance to an accuracy of 0.01 g.

(b) The weighed pieces shall then be placed in distilled water at room temperature in a suitable vessel, supported so that they shall not be in contact with the heated bottom of the container, and boiled for 2 hr. Each sample shall remain in the water for 20 hr, dried with a damp towel to remove excess water, and reweighed to an accuracy of 0.01 g.

(c) The absorption shall be reported as a percentage of the original weight of the dried sample. The percentage for each test piece shall be obtained by dividing the difference between the weight of the original dried test pieces and the final weight of the test pieces after immersion in the boiling water by the weight of the original dried test pieces and multiplying by 100. The average absorption of the three test pieces shall not exceed 0.5%.

$$\text{Absorption, \%} = \frac{W_f - W_o}{W_o} \times 100$$

where

W_f = final weight of test pieces after immersion in water

W_o = original weight of dried test pieces

Copyright ASME International
Provided by IHS under license with ASME
No reproduction or networking permitted without license from IHS
Not for Resale

7.2 Crazing Test (See Para. 2.2)

(a) A test specimen with a glazed surface not more than $\frac{5}{8}$ in. (16 mm) thick by approximately 5 in.^{2} (3 200 mm^2) shall be suspended in a room temperature solution of equal portions, by weight, of anhydrous calcium chloride and water, and then maintained at a constant temperature of 230 ± 5°F (110 ± 3°C), for 90 min.

(b) The test specimen shall then be removed and immediately plunged into an ice water bath at 37 ± 1°F (2.5 ± 0.5°C) until chilled. The specimen shall then be soaked for 12 hr in a 1% solution of methylene blue dye at room temperature, after which it shall be examined for craze lines as indicated by penetration of the blue dye. No crazing shall be permitted.

7.3 Warpage Test (See Para. 2.4)

The fixture shall be placed on a flat and level surface so as to ascertain the amount of deviation from the horizontal plane that exists at the edges of the fixture. If a feeler gauge of the thickness equal to the total warpage allowed in Tables 1 and 2 will not slide under the fixture without forcing, the fixture shall be considered as meeting the warpage requirements. If the fixture rocks on two opposite corners, the horizontal plane shall be determined by placing one feeler gauge, as thick as the total warpage allowed, under a corner that does not touch the plane and then forcing the fixture down on this gauge. If a second feeler gauge of the same thickness will not slide under the fixture at any other point, the fixture shall be considered as meeting the warpage requirements.

7.4 Evaluation of Surface Finish (See Para. 2.6)

The light source used to evaluate the surface finish of vitreous china fixtures shall be partially diffused daylight, supplemented, if necessary, with diffused artificial light, giving an illumination intensity near the surface to be inspected at a minimum of 1100 lx.

(a) The test fixtures shall be examined for defects with the eyes of the inspector approximately 24 in. (61 cm) directly above the rim while the fixture is rocked to each side and backward to an angle of approximately 45 deg.

(b) Water closet bowls, tanks, and urinals shall be graded in accordance with Table 1. Defects such as crazes, dunts, and fire checks or large blisters, which expose the body on the flushing surfaces, shall be cause for the rejection of the fixture.

(c) Lavatories and drinking fountains shall be graded in accordance with Table 2. Pedestals and legs shall be graded the same as water closet bowls. Blemishes such as crazes, dull or eggshell finishes, dunts, exposed body, fire checks, and large blisters shall be cause for the rejection of the fixture.

(d) For vitreous china plumbing fixtures not specifically mentioned in the foregoing, the grading rules for water closet bowls shall apply.

7.5 Auger Test (See Para. 2.7.2)

A conventional manual type closet auger shall be inserted into the bowl and through the trapway while manually rotating the auger five times for each test cycle. When required by the manufacturer, a drain snake shall be used in accordance with the manufacturer's recommendations. Prior to each test cycle, the water in the bowl shall be adjusted and maintained at the normal water level. A total of 100 cycles shall be performed by removing, reinserting, and rotating the auger for each cycle. There shall be no water leakage, other than trap outlet spillage, after removal of the auger. This test shall be performed prior to running any of the hydraulic performance tests contained in this Standard.

7.6 Insulated Tank Test (See Para. 2.7.3)

Insulated tanks shall be tested in an environmental chamber or room. The water temperature inside the tank shall be adjusted and maintained at 45 ± 2°F (7 ± 1°C). The ambient temperature shall be maintained as follows:

(a) dry bulb temperature = 80 ± 2°F (27 ± 1°C)

(b) wet bulb temperature = 70 ± 2°F (21 ± 1°C)

(c) relative humidity = 63% ± 3%

(d) air velocity adjacent to any tank surface = 50 ft/min (0.25 m/sec) maximum

There shall be no condensation on the tank exterior for a test duration of 3 hr.

7.7 Load Tests for Wall-Mounted Fixtures (See Para. 2.8)

All wall-hung fixtures to be tested shall be firmly affixed to a solid test stand in accordance with the manufacturer's installation instructions. The supporting devices shall remain exposed for the duration of this testing for examination. If the manufacturer provides a support device with the fixture, that device shall be employed for this test. In all cases, the test fixture shall withstand the full test load for 10 min without failure or any visible structural damage.

7.7.1 Wall-Mounted Water Closets. If intended for use with a seat, a plastic seat with bumpers shall be fastened to the fixture. Two channels, American Standard Channels size 3U 4.1, 3 in. (75 mm), approximately 2 ft (60 cm) long, shall be placed back to back and spaced 3 in. (75 mm) apart. A $\frac{1}{4}$ in. (6 mm) steel plate shall be fillet welded to the top flange of the channels. The channels shall be placed across the closet seat and centered at a distance of 10 in. (250 mm) for round front bowls and 12 in. (300 mm) for elongated bowls measured from the centerline of the seat bolts. A load of 500 lbf (2.2 kN), including the weight of the channels and plate, shall be applied onto the channel and plate assembly.

7.7.2 Wall-Mounted Lavatories. Lavatories shall withstand an applied vertical load of 250 lbf (1.1 kN) on the top surface on the front of the fixture rim.

Copyright ASME International
Provided by IHS under license with ASME
No reproduction or networking permitted without license from IHS
Not for Resale

7.7.3 Wall-Mounted Urinals. Urinals shall withstand an applied vertical load of 50 lbf (0.22 kN) on the top surface on the front of the fixture lip.

7.8 Joint Seal Test (See Para. 3.2.2)

The joint between the nonstandard outlet configuration and the drainage system shall be made in accordance with the manufacturer's instructions and subjected to a hydrostatic pressure of 15 psig (105 kPa gauge) for a period of 15 min. There shall be no evidence of leakage.

8 WATER CLOSET TESTS

8.1 General

This paragraph presents the test methods and performance requirements for water closets. These procedures and requirements shall apply to all fixtures as applicable.

8.1.1 Test Apparatus and General Instructions. For all tests, the pressure and flow measuring apparatus employed for testing and the configuration of the water supply system shall conform to the requirements contained in Fig. 8 for tank type water closets and Fig. 9 for flushometer-valve water closets and urinals. The water supply system shall be standardized in accordance with the procedures specified in Fig. 8 or Fig. 9 as required. The temperature of the water shall be 65 to 80°F (18 to 27°C). For all tests, the test water closet shall be placed on a flat and level or plumb surface, with the outlet and trapway clear. The water closet shall discharge to atmosphere for all tests. All tests shall be conducted in consecutive order as they appear in Table 5.

8.1.2 Gravity-Type Flush Tank Water Closets. At each supply pressure specified for the individual tests for gravity-type water closets, the water level in the tank and the fill time shall be adjusted according to the manufacturer's instructions and specifications. Water closets that require higher minimum supply pressures shall be adjusted in accordance with the manufacturer's instructions. Once the water level and fill time adjustments have been made for the 20 psig (140 kPa gauge) water consumption test or the manufacturer's stated minimum pressure, no further adjustments to the tank shall be permitted for the rest of the tests. These requirements shall apply for all tests. In the absence of manufacturer's instructions and specifications, the supply fill valve shall remain set as packaged from the manufacturer.

8.1.3 Flushometer-Valve Water Closets. At each test pressure specified for the individual tests for flushometer-valve water closets, the supply stop shall be adjusted to the manufacturer's instructions and specifications. In the absence of such instructions and specifications, the stop shall be adjusted as specified in Fig. 9.

8.1.4 Flushometer Tank or Other Pressurized Flushing Device Water Closets. At each test pressure specified for the individual tests for flushometer tank or other pressurized flushing device water closets, the tank components shall be adjusted to the manufacturer's instructions and specifications. In the absence of such instructions and specifications, the tank components shall remain as packaged from the manufacturer.

8.1.5 Test Media Load. If the particular test calls for a test media load, the test media shall be placed in the test water closet bowl as specified and the flush device shall be activated as specified. The test water closet shall discharge into a receiving vessel or transport waste line. The test media remaining in the bowl, if any, and those discharged into the receiving vessel or transport waste line shall be observed. Then, if required, the test water closet shall be flushed again to remove any remaining media from the bowl or trapway prior to each test run.

8.1.6 Test Results. Results shall be evaluated and reported in accordance with the detailed procedures specified for each test. Formats for reporting test results appear in Appendix D. Alternate formats for reporting data which accurately demonstrate the level of compliance of the test fixture shall also be acceptable.

8.2 Trap Seal Depth Determination

8.2.1 Apparatus. Figure 10 depicts an apparatus for determining trap seal depth. Other apparatus, such as a steel tape measure or a steel rule with a perpendicular horizontal element secured to one end, shall also be acceptable.

8.2.2 Procedure. The probe shall be lowered until the horizontal element is resting against the bottom of the trap dip. The corresponding scale value shall be recorded as h_1. Then the horizontal element shall be disengaged from the probe and the probe shall be elevated completely out of the water in the test bowl. The bowl shall be confirmed to be at full trap seal depth by pouring water slowly into the well until slight overflow is detected dripping from the bowl outlet. When the dripping ceases, the probe shall be adjusted so that the point is exactly at the water surface. The corresponding scale value shall be recorded as h_2. The full trap seal shall be calculated by subtracting h_2 from h_1 ($H_f = h_1 - h_2$).

8.2.3 Report. The full trap seal depth shall be reported.

8.2.4 Performance Requirement. The full trap seal depth (H_f) shall not be less than 2 in. (50 mm).

Copyright ASME International
Provided by IHS under license with ASME
No reproduction or networking permitted without license from IHS
Not for Resale

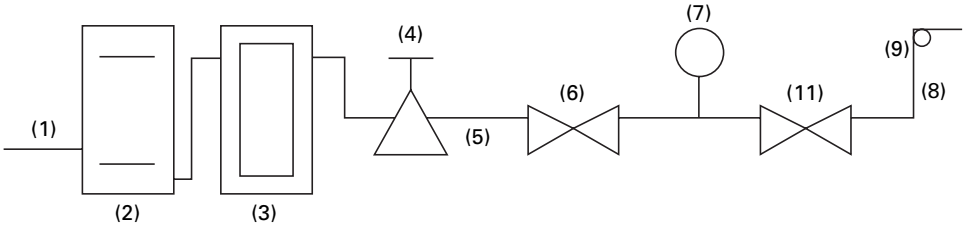

(a) Water Supply Shown Ready for Standardization

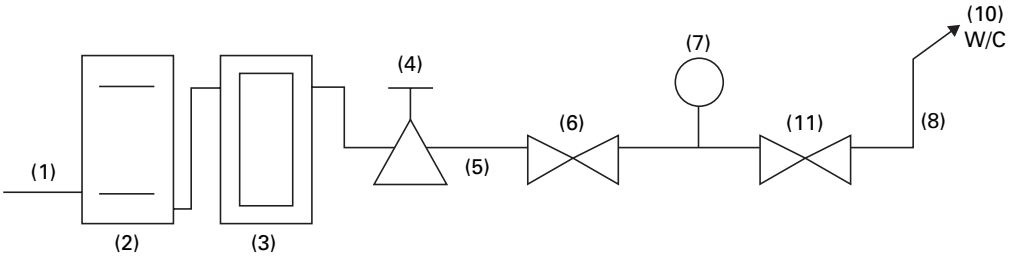

(b) Water Supply Shown Ready for Water Closet Test

GENERAL NOTE: The following is the procedure for standardizing a water supply system for tank type (gravity and flushometer-tank) water closets. The purpose of this procedure shall be to establish the system capacity at the minimum test pressure, which simulates the maximum piping resistance allowed in the field installations.

(a) Pressure regulator (4) shall be set to provide the reduced static pressure of 20 psig (140 kPa gauge).

(b) Valves (6) and (9) shall be adjusted to establish a flow of 3.0 gpm (11.4 L/min) with 8 psig (60 kPa gauge) flowing pressure at gage (7). Valve (11) shall be fully open, except when used to shut off the flow completely.

(c) After establishing the specified flow conditions, valve (9) shall be removed and the test water closet installed.

NOTES:

(1) *Water Supply.* Water for testing shall be clean. A minimum supply pressure of 125 psig (860 kPa gauge) static shall be provided.

(2) *Filter.* A filter shall be used to remove particles and contaminants from the water supply system to prevent interference with the operation of the system or the water closet under test.

(3) *Flowmeter.* The flowmeter shall cover the range 0 to 10 gpm (0 to 38 L/min) and have an accuracy of 2% full scale. Variable area and turbine meters shall be permitted.

(4) *Regulator.* The pressure reducing valve shall cover the range 20 to 80 psig (140 to 550 kPa gauge) and shall have a capacity not less than 10 gpm (38 L/min) at a falloff pressure of 5 psig (35 kPa gauge).

(5) *Supply Piping.* A minimum $^{3}/_{4}$ in. (19 mm) diameter pipe or tubing shall be used for water closet testing.

(6) *Valve.* The control valve shall be a commercially available $^{3}/_{4}$ in. (19 mm) globe valve or equivalent to facilitate throttling.

(7) *Pressure Gauge.* The pressure gauge shall have a range of 0 to 100 psig (0 to 690 kPa gauge) and have 1 psig (10 kPa gauge) divisions. Accuracy shall not be less than 2% full scale.

(8) *Flexible Hose.* Flexible hose shall connect the standardized supply to the water closet supply assembly. The hose shall be $^{5}/_{8}$ in. (16 mm) minimum inside diameter.

(9) *Stop Valve.* The stop valve simulating a fill valve (ballcock) shall be a nominal $^{3}/_{8}$ in. in size.

(10) *Water Closet Under Test.* Complete with tank and fill valve (ballcock).

(11) *Ball or Gate Valve.* Shall be used for on–off control [$^{3}/_{4}$ in. (19 mm) diameter minimum].

Fig. 8 Required Standardization of Water Supply for Testing Gravity and Flushometer-Tank Operated Type Water Closets

Copyright ASME International
Provided by IHS under license with ASME
No reproduction or networking permitted without license from IHS

Not for Resale

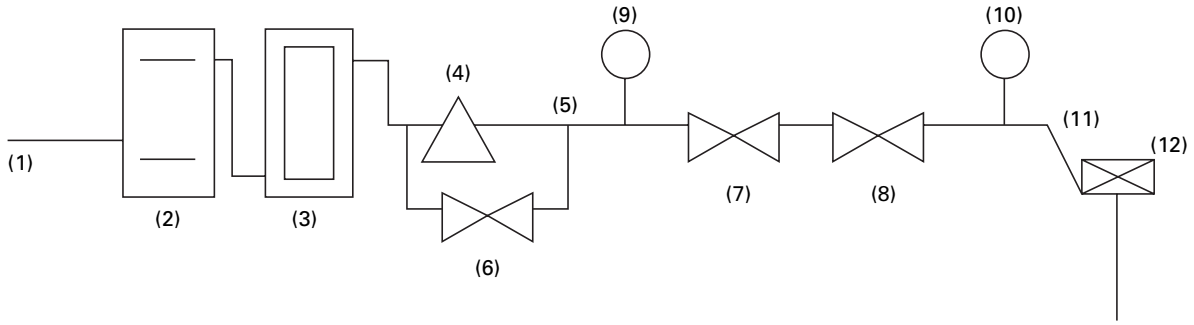

GENERAL NOTE: The following is the procedure for standardizing a water supply system for the testing of flushometer-valve water closets and urinals. The purpose of this procedure shall be to establish the system capacity at the minimum test pressure for flushometer-valve water closets and urinals, and to simulate typical field installations under easily repeatable test laboratory conditions.

(a) The static pressure at gage (9) shall be 35 psig (240 kPa gauge) for flushometer-valve water closets, 45 psig (310 kPa gauge) for blowout bowls, or 25 psig (170 kPa gauge) for urinals by adjusting regulator (4).

(b) The complete flushometer valve with matching angle stop in the full open position shall be attached at the discharge end of the system and open to atmosphere.

(c) The flushometer valve shall be activated and a peak flow rate, of 25 ± 1 gpm (95 ± 4 L/min) for flushometer-valve water closets, 35 ± 1 gpm (133 ± 4 L/min) for blowout bowls, or 10 ± 0.5 gpm (38 ± 2 L/min) for urinals, shall be established by adjusting valve (7).

(d) The flushometer valve shall be connected to the test bowl. The angle stop shall be permitted to be adjusted per the manufacturer's recommendations. The peak flow rate through the flushometer valve while attached to the bowl, and the peak flowing pressure at gage (10), shall be recorded. While conducting consumption testing at 50 and 80 psig (350 and 550 kPa gauge), the peak flow rate shall be maintained ±1 gpm (±4 L/min) by making adjustments to the angle stop if required.

NOTES:

(1) *Water Supply.* Water for testing shall be clean. A minimum supply static pressure of 125 psig (860 kPa gauge) shall be provided.

(2) *Filter.* A filter shall be used to remove particles and contaminants from the water supply system, to prevent interference with the operation of the system or the water closet under test.

(3) *Flowmeter.* The flowmeter shall cover the range 0 to 60 gpm (0 to 227 L/min) and have an accuracy of 2% full scale. Variable area and turbine meters shall be permitted.

(4) *Regulator.* The pressure reducing valve shall cover the range 20 to 80 psig (140 to 550 kPa gauge) and shall have a capacity not less than 50 gpm (189 L/min) at a falloff pressure of 5 psig (35 kPa gauge).

NOTE: A 2 in. (51 mm) regulator bushed down to $1\frac{1}{2}$ in. (38 mm) has been found to be satisfactory to achieve the specified flow rates. Some $1\frac{1}{2}$ in. (38 mm) regulators do not allow for high flow rates due to restrictions. A second regulator to provide a controlled inlet pressure is recommended.

(5) *Supply Piping.* A minimum $1\frac{1}{2}$ in. (38 mm) diameter pipe or tubing shall be used for water closet testing.

(6) [Also (7) and (8)] *Valves.* The control valves shall be a commercially available full bore $1\frac{1}{2}$ in. (38 mm) globe valve or equivalent to facilitate throttling (7), quick shut off (8), and bypass (6) of the regulator.

(9) [Also (10)] *Pressure Gauges.* The pressure gauge shall have a range of 0 to 100 psig (0 to 690 kPa gauge) and have 1 psig (10 kPa gauge) divisions. Accuracy shall not be less than 2% full scale.

(11) *Flexible Hose.* Flexible hose shall be used for connecting the standardized supply to the flushometer-valve supply assembly. The hose shall be $1\frac{1}{4}$ in. (32 mm) inside diameter and shall not exceed 10 ft (3 m) in length.

(12) *Flushometer Valve.* The flushometer valve shall be supplied with matching supply stop. At the option of the water closet manufacturer, the water closet manufacturer or the test laboratory shall supply the flushometer valve for testing. All flushometer valves used for testing to the requirements of this Standard shall comply with the latest edition of ASSE 1037.

Fig. 9 Required Standardization of Water Supply for Testing Flushometer-Valve Operated Type Water Closets and Urinals

Copyright ASME International
Provided by IHS under license with ASME
No reproduction or networking permitted without license from IHS Not for Resale

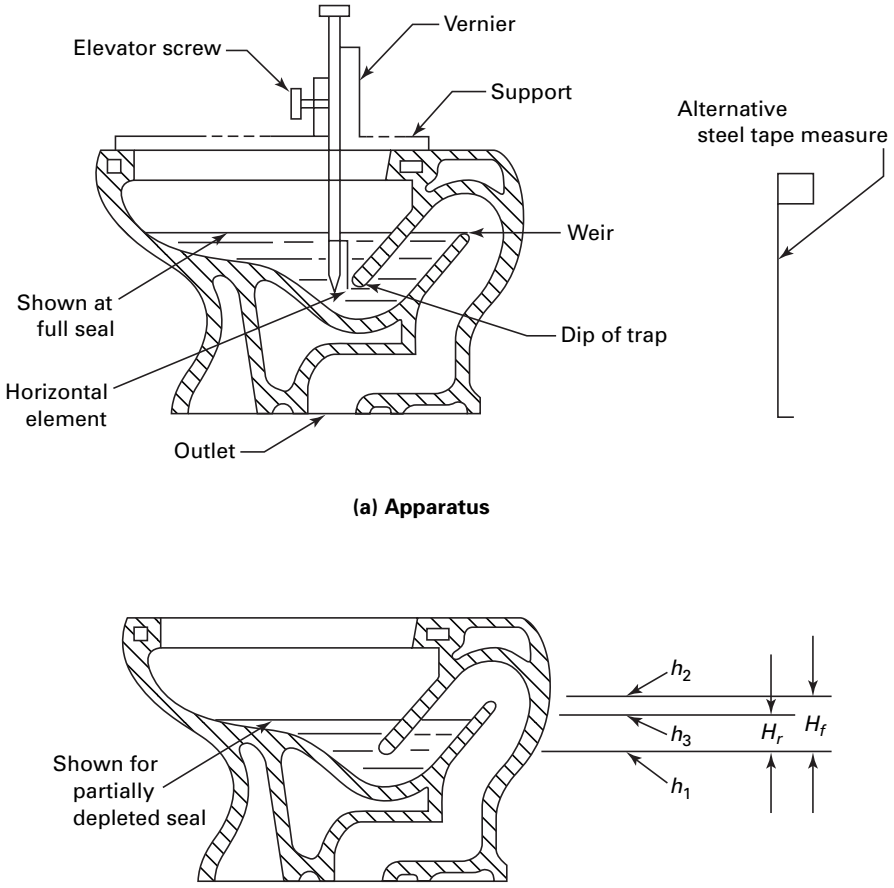

Fig. 10 Diagram Depicting Suggested Apparatus for Trap Seal Depth Determination for Water Closets and Urinals

8.3 Trap Seal Restoration

8.3.1 Apparatus. Same as in para. 8.2.1.

8.3.2 Procedure. When conducting the water consumption tests (see para. 8.4), observations for full trap seal restoration shall be made as evidenced by overflow out of the test water closet outlet after the main flush discharge. Such overflow shall be sufficient indication of trap seal restoration. If no overflow is observed, the water consumption test shall be interrupted and the residual trap seal shall be measured as required by the procedures contained in para. 8.2, omitting the addition of water to the well. The test water closet shall then be flushed ten times and the residual trap seal calculated after each flush cycle. After each flush cycle, the probe shall be adjusted so that the point is exactly at the water surface. The corresponding scale value shall be recorded as h_3. The residual trap seal value shall be calculated as $H_r = h_1 - h_3$.

8.3.3 Report. The residual trap seal (H_r) shall be reported for each required flush.

8.3.4 Performance Requirement. A residual trap seal (H_r) of not less than 2 in. (50 mm) shall be restored after any of the required flushes.

8.4 Water Consumption

8.4.1 Apparatus. A receiving vessel shall be used, calibrated either by volume in increments not exceeding 0.07 gal (0.25 L) or placed on a load cell with a readout in increments not exceeding 0.07 gal (0.25 L). A stopwatch or electric timer graduated in increments not greater than 0.1 sec shall be used to measure time. Other apparatus shown to be capable of measuring volumes to within 0.07 gal (0.25 L) shall be acceptable.

8.4.2 Procedure. The static pressure shall be recorded; then the flush release device shall be activated and held

Copyright ASME International
Provided by IHS under license with ASME
No reproduction or networking permitted without license from IHS
Not for Resale

for 1 sec while simultaneously starting the stopwatch or timer. (See Appendix D, Table D1.)

When the main flush is completed, as indicated by cessation of the trailing flow which occurs at the end of the principal discharge, the volume received in the vessel (main flush volume) shall be recorded. The volume (total flush volume) after cessation of flow of the excess trap refill water (after-flow) occurs, subsequent to the first observation, shall be recorded. The total flush volume shall be rounded down to the nearest 0.07 gal (0.25 L). When the fill valve is completely shut off, the stopwatch or timer shall be stopped and the elapsed time (cycle time) shall be recorded. The amount of excess trap refill (after-flow) shall be determined by subtracting the main flush volume from the total flush volume. If there was no evidence of after-flow, the trap seal restoration (see para. 8.3) and the residual trap seal depth shall be measured and recorded. This completes one test cycle. This procedure shall be repeated until three sets of data are obtained for each test pressure specified by Table 5.

8.4.3 Report. Static pressure, cycle time, main and total flush volume, and after-flow (if any) shall be reported in a format similar to the format appearing in Table D1.

8.4.4 Performance Requirements. The average water consumption of water closets over the range of pressures specified by Table 5 shall not exceed 1.6 gal (6 L) for low-consumption water closets or 3.5 gal (13.2 L) for water-saving water closets. Also, the consumption shall not exceed 2.0 gal (7.6 L) for low-consumption water closets or 4.0 gal (15.1 L) for water saver blowout water closets, at any one test pressure. The above requirements shall be based upon the average of the individual values from the three-run test sets. The average flush cycle time shall not exceed 3 min at any test pressure.

8.5 Granule and Ball Test

8.5.1 Test Media. The test media shall consist of

(a) 65 g (approximately 2 500), cylindrically shaped, high density polyethylene (HDPE) granules of 0.150 ± 0.010 in. (3.80 ± 0.25 mm) diameter, 0.105 ± 0.015 in. (2.64 ± 0.38 mm) thickness, and an average bulk density of 58.7–59.3 lb/ft^3 (940–950 kg/m^3).

(b) 100 nylon balls, 0.25 ± 0.01 in. (6 ± 0.25 mm) diameter, with an average bulk density of 71.8–74.3 lb/ft^3 (1.15–1.19 kg/m^3). The weight of the 100 nylon balls shall be between 15 and 16 g.

8.5.2 Procedure. The granules shall be flushed once before beginning the test. The test media shall be added to water in the bowl and the balls permitted to settle to the bottom of the well. The actuator shall be tripped and held for 1 sec maximum and released. After completion of this initial flush, the granules and balls remaining visible in the bowl shall be counted. The residual trap seal (see para. 8.2 for procedure) shall be observed and recorded. Three sets of data shall be obtained.

8.5.3 Report. The number of granules and balls remaining visible in the bowl after flushing shall be reported using Table D2.

8.5.4 Performance Requirements. It is required that

(a) not more than 125 granules (5%) shall be visible in the bowl after each initial flush and

(b) not more than 5 nylon balls (5%) shall be visible in the bowl after each initial flush

8.6 Surface Wash Test

8.6.1 Test Media. The ink line shall be applied using a wet-erase fine-point transparency marker. The color of the ink shall be a contrasting color to the test bowl.

8.6.2 Procedure. The flushing surface shall be scrubbed clean with a mild liquid dishwashing detergent to remove any buildup or deposits on the walls of the test bowl. The surface shall then be rinsed and dried. A line shall be inked around the circumference of the *flushing surface* of the test bowl at a level of 1 in. (25 mm) below the rim jets of the bowl. The actuator shall be tripped and held for 1 sec maximum. The lines shall be observed during and after the flush. When the *flush cycle* is complete, the lengths of the unwashed line segments where the ink has remained on the *flushing surface* shall be measured, and their approximate position in the bowl shall be observed and recorded. This completes one test run. This procedure shall be repeated until three sets of data are obtained.

8.6.3 Report. The number and lengths of the ink line segments remaining on the flushing surface shall be reported in a format similar to the format appearing in Table D3.

8.6.4 Performance Requirement. For the line drawn at 1 in. (25 mm) below the rim holes, the total length of ink line segments remaining on the flushing surface after each flush shall not exceed 2 in. (50 mm) as averaged over three test runs. No individual segment shall be longer than ½ in. (13 mm).

8.7 Mixed Media With Neutrally Buoyant Wastes

8.7.1 Test Media. Use synthetic open cell polyurethane sponges, white, 0.8 × 0.8 (±0.04) × 1.1 (±0.12) in. [20 × 20 (±1) × 28 (±3) mm] having a density of 1.1 ± 0.11 lb/ft^3 (17 ± 1.7 kg/m^3) when new. Sponges shall be conditioned (soaked) in water 10 min before use. New sponges shall be used for each test set used as a basis for certification (four replicates). The quantity shall be 20 sponges.

Use kraft anti-tarnish paper, 7½ ± ¼ in. × 6 ± ¼ in. (190 ± 5 mm × 150 ± 5 mm), 15 lb, 486 sheets to the ream. Crinkle one sheet between the palms of your hands to form each one of the required number of balls approximately 1 in. in diameter. Hold the individual paper balls

Copyright ASME International
Provided by IHS under license with ASME
No reproduction or networking permitted without license from IHS
Not for Resale

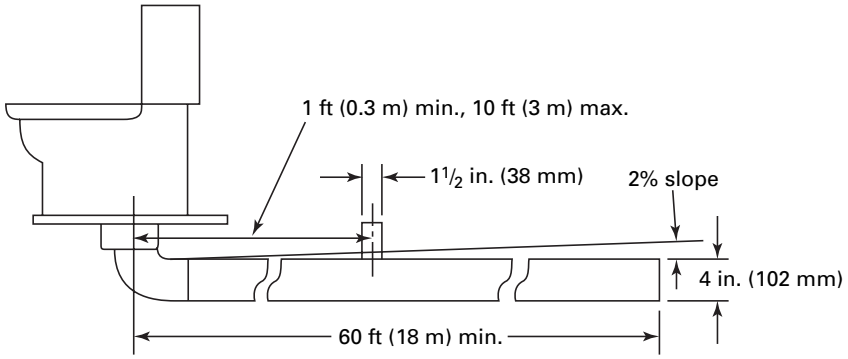

Fig. 11 Drainline Transport Characterization Test Assembly

under water in a separate container for 5 to 10 sec, or as required, to completely saturate the medium before each test run. The quantity shall be eight paper balls.

8.7.2 Procedure. Place the required number of new conditioned sponges (20) in the test bowl and squeeze them under water to remove air to the greatest extent possible, saturating the media. Slowly refill the well with water to ensure a full depth of seal. Drop the eight fully saturated paper balls individually (see procedure in para. 8.7.1) into the well so that they are distributed evenly. The actuator shall be depressed and held for 1 sec maximum. After the flush cycle is completed, count and record the number of sponges and paper balls discharged through the fixture. The actuator shall be tripped and held for 1 sec a second time to remove any remaining media. The two-flush procedure shall be repeated until four sets of values have been obtained.

8.7.3 Report. The number of sponges and paper balls discharged from the fixture on the initial flush shall be reported. The number of sponges and paper balls discharged from the fixture on the second flush shall be reported. See Table D4 for a suggested format for recording these results.

8.7.4 Performance Requirement. For acceptance, in three of the four replicate procedures (one result is discarded), an average of 22 mixed media (sponges and paper balls) shall be flushed out of the fixture on the initial flush. The remaining, if any, shall be flushed out on the second flush.

8.8 Drainline Transport Characterization Procedure

8.8.1 Test Media. The test media shall be 100 polypropylene balls having a diameter 0.75 ± 0.015 in. (19 ± 0.4 mm) and the density per ball between 51.6–53.0 lb/ft^3 (827–849 kg/m^3). The weight of the 100 balls shall be 10.5 ± 0.35 oz (298 ± 10 g).

8.8.2 Apparatus. An assembly shall be made of 4 in. I.D. rigid plastic or glass pipe of minimum 60 ft (18.3 m) length connected directly to a 4 in. plastic ¼ bend in accordance with ASTM D 3311, or a borosilicate glass 4 in. 90 deg elbow using a hubless coupling or solvent cement joint as applicable. The elbow shall be connected directly to the floor flange of the water closet under test. The pipe shall run from the water closet and shall be supported to provide a straight run having a 2% slope. For back-outlet water closets, the drain shall be extended up from the floor level using fittings complying with ASME A112.6.1M or ASME A112.6.2, using 4 in. plastic DWV piping and sanitary tee, so that the water closet outlet is at the manufacturer's recommended height above the floor. See Fig. 11.

8.8.3 Procedure and Setup

(a) Water supply and general conditions shall follow the recommendations described in para. 8.1.1 unless otherwise specified.

(b) Place 100 polypropylene balls in the bowl. The actuator shall be tripped and held for 1 sec maximum. Observe the distance of travel of each exiting ball. Remove all test media from the fixture and the pipe before repeating this procedure.

8.8.4 Report. To arrive at an overall measure of performance, the location of the balls after flushing shall be recorded in one of eight categories, which represent various distances of travel down the drainline. These categories shall include those balls that remain in the bowl or trapway, those that exceed the 60 ft (18.3 m) length of pipe, and one category for each 10 ft (3 m) increment of pipe [e.g., 0–10 ft (0–3 m), 10–20 ft (3–6.1 m), etc.].

After the initial flush, the number of balls in each of the categories described above shall be counted and recorded. The procedure shall be repeated three times, recording the same data from each initial flush.

To calculate the weighted carry distance, first the data in the same categories shall be added together for all three runs to get the total number of balls in each category. Then the total number of balls in each category shall be multiplied by the average distance traveled as indicated below.

Copyright ASME International
Provided by IHS under license with ASME
No reproduction or networking permitted without license from IHS
Not for Resale

Any balls remaining in the bowl or trap shall be considered to have traveled zero distance. Balls in a 10 ft segment of the pipe shall be considered to have traveled the average distance of that 10 ft segment of pipe from the trapway [e.g., balls in the 10–20 ft segment are assumed to have traveled 15 ft (4.6 m)]. Any balls that exceed the 60 ft length shall be considered to have traveled 60 ft (18.3 m).

The average carry distance shall be the weighted carry distances divided by the total number of balls (three runs × 100 balls = 300 balls total). See Table D5 for a suggested format for reporting the results.

8.8.5 Performance Requirements. The average carry distance (total carry of all balls divided by 300, the total number of balls) shall be 40 ft (12.2 m) or greater.

8.9 Overflow Test for Gravity Tanks

8.9.1 Apparatus. The test apparatus shall be as specified in para. 8.1.1.

8.9.2 Procedure. The static pressure shall be adjusted to 80 psi (550 kPa). The water supply valve, Valve 11, shall be opened for a period of 5 min. The tank fill valve shall be set to flow full open.

8.9.3 Report. Observe and report any leakage or water discharge outside the fixture.

8.9.4 Performance Requirement. Leakage or water escaping from the fixture shall constitute failure.

9 LAVATORY OVERFLOW TEST

See para. 5.2. The fixture shall be installed with a standard mechanical waste fitting and the lavatory leveled in a stand. The waste outlet shall be closed and the water supply adjusted to supply water to the fixture at a flow rate and pressure as specified in ASME A112.18.1 for maximum flow rate testing of a lavatory faucet. The elapsed time from the onset of water flowing into the overflow opening until the water begins to overflow the flood level shall be measured. The fixture shall drain for a minimum of 5 min from the onset of water flowing into the overflow opening, without overflowing the flood level.

10 URINAL TESTS

10.1 General

This paragraph presents test methods and performance requirements for urinals. These test methods and performance requirements shall apply to all urinals.

10.2 Test Apparatus and General Instructions

The principal features of the test apparatus shall be as shown in Fig. 9. Preparations and general instructions for testing shall be as follows. Before connecting and testing urinals, the water supply shall be standardized in accordance with Fig. 9.

(a) The urinal shall be plumb, the trap and outlet clear, and, if applicable, the urinal shall be filled to trap weir level before making each test run.

(b) At each test pressure specified for the individual tests for flushometer-valve urinals, the supply stop shall be adjusted to the manufacturer's instructions and specifications. In the absence of such instructions and specifications, the stop shall be adjusted as specified in Fig. 9. Test pressures for urinals shall be set in accordance with Table 6.

(c) The flush device shall be activated in a normal manner.

(d) The results shall be evaluated and reported in accordance with the detailed procedures specified for each test in paras. 10.3 through 10.6.

10.3 Trap Seal Depth Determination

10.3.1 Apparatus. Figure 10 depicts an apparatus for determining trap seal depth. Other apparatus such as a steel tape measure or a steel rule with a perpendicular horizontal element secured to one end shall also be acceptable.

10.3.2 Procedure. The probe shall be lowered until the horizontal element is resting against the bottom of the trap dip. The corresponding scale value shall be recorded as h_1. Then the horizontal element shall be disengaged from the probe and the probe shall be elevated completely out of the water in the test urinal. Insure that the urinal is at full trap seal depth by pouring water slowly into the well until slight overflow is detected dripping from the urinal outlet. When the dripping ceases, the probe shall be adjusted so that the point is exactly at the water surface. The corresponding scale value shall be recorded as h_2. The full trap seal shall be calculated as $H_f = h_1 - h_2$.

10.3.3 Report. The full trap seal depth shall be reported.

10.3.4 Performance Requirement. The full trap seal depth (H_f) shall not be less than 2 in. (50 mm).

10.4 Ink Test

10.4.1 Apparatus. The test media shall be applied by an artist's felt-tipped pen containing contrasting-colored, water-soluble ink.

10.4.2 Procedure. The flushing surface shall be scrubbed clean with a mild liquid dishwashing detergent to remove any buildup of deposits on the walls. The surface shall be rinsed and then dried with oil-free air. A horizontal line shall be inked at an elevation which is one-third the distance below the lowest point of the flushing rim on the back wall of the urinal to the top of the water surface. This line shall extend to 50% of the

Copyright ASME International
Provided by IHS under license with ASME
No reproduction or networking permitted without license from IHS
Not for Resale

distance along the interior sidewall. Where the interior sidewall is not defined by a reverse draft molding, a reference line shall be drawn from the front of the spreader down to the top rear of the urinal lip, to the point where it merges with the shield. The flush device shall be activated. When the trap refill cycle is completed, the lengths of the unwashed line segments shall be measured where the ink remains on the flushing surface. This shall complete one test run. The procedure shall be repeated until three sets of data are obtained.

10.4.3 Report. The number and lengths of ink line segments remaining on the flushing surface shall be reported. This data shall be reported in a format similar to that appearing in Table D8.

10.4.4 Performance Requirement. The total length of ink line segments remaining on the flushing surface after each flush shall not exceed 1 in. (25 mm), based on the average of the three test runs. No individual segment shall be longer than ½ in. (13 mm).

10.5 Dye Test

10.5.1 Test Media and Apparatus. The test media shall be 5 g of either methylene blue powder or brilliant polar blue dye, a thoroughly clean container to mix 1 L of dye, and a clean container to mix the control sample.

10.5.2 Procedure. Five grams of the dye powder shall be added to 1 L of water and mixed thoroughly. The test urinal shall be cleaned, flushed once, and allowed to complete its flush cycle. Thirty ml of the dye solution shall be added to the water in the urinal well and mixed thoroughly. Then 10 ml of this solution shall be removed from the urinal and shall be added to 1 000 ml of clean water in a clean container (i.e., a dilution ratio of 100:1). A sample of this solution shall be set aside in a test tube or comparator vial as the control sample for all three tests. The urinal shall then be flushed and cleaned to ensure that all traces of the dye have been removed. Thirty ml of the dye solution shall be added to the test urinal and mixed. The flush release device shall be activated and the urinal shall be allowed to complete its flush cycle. A test tube or comparator vial shall be filled with the diluted solution from the test urinal and compared against the control sample. The darkness of color of the test sample relative to the control sample shall be recorded. This completes one test cycle. The procedure shall be repeated until three sets of data are obtained.

10.5.3 Report. The color of the test sample shall be compared to the color of the control sample. The test report shall indicate whether the test sample is lighter than or equal to (pass), or darker than (fail), the control sample.

10.5.4 Performance Requirement. A dilution ratio of at least 100:1, as determined by comparison of the test sample to the control sample, shall be obtained in each of the three initial flush cycles.

10.6 Water Consumption

10.6.1 Apparatus. The apparatus shall consist of a receiving vessel calibrated either by volume in increments not exceeding 0.07 gal (0.25 L) or placed on a load cell with a readout in increments not exceeding 0.07 gal (0.25 L). Other apparatus shown to be capable of measuring volumes to within 0.07 gal (0.25 L) shall be acceptable.

10.6.2 Procedure. The static pressure shall be recorded; then the flush device shall be activated. When the main flush is completed, as indicated by cessation of the trailing flow which occurs at the end of the principal discharge, the volume received in the vessel (main flush volume) shall be recorded. The volume (total flush volume) after cessation of flow of the excess trap refill water (after-flow) occurs, subsequent to the first observation, shall be recorded. The total flush volume shall be rounded down to the nearest 0.07 gal (0.25 L). The amount of excess trap refill (after-flow) shall be determined by subtracting the main flush volume from the total flush volume. This completes one test cycle. This procedure shall be repeated until three sets of data are obtained for each test pressure specified by Table 6.

10.6.3 Report. Static pressure, main and total flush volume, and after-flow (if any) shall be reported in a format similar to the format appearing in Table D7.

10.6.4 Performance Requirements. The average water consumption of urinals over the range of pressures specified by Table 6 shall not exceed 1 gal (3.8 L) for low-consumption urinals. The above requirements shall be based upon the average of the individual values from the three test sets.

Copyright ASME International
Provided by IHS under license with ASME
No reproduction or networking permitted without license from IHS
Not for Resale

Copyright ASME International
Provided by IHS under license with ASME
No reproduction or networking permitted without license from IHS
Not for Resale

NONMANDATORY APPENDIX A
DEMONSTRATING COMPLIANCE TO ASME A112.19.2

A1 GENERAL

This Appendix, while not mandatory, contains recommended requirements for demonstrating compliance to ASME A112.19.2-2003, and recommended sampling plans. These recommendations were developed with consideration to the unique and inherent properties of vitreous china, and the manufacturing variations that are associated with the production of water closets.

Because it is not realistic to expect every sample manufactured to be in complete compliance with every performance-related requirement, it is recommended that administrative authorities, third-party certifiers, and quality assessment agencies employ the recommendations contained below.

A2 APPROPRIATE TEST REQUIREMENTS

Six-liter water closets shall conform to the requirements contained in ASME A112.19.2-2003 as follows:

Level of Certification	Test Requirements
Initial certification	The test sample shall meet all requirements contained in ASME A112.19.2-2003
Retesting or recertification of previously certified models	The sample shall be tested to the essential health, safety, and water conservation requirements identified in para. A3

A3 ESSENTIAL TESTING REQUIREMENTS FOR PREVIOUSLY CERTIFIED PRODUCTS

The following requirements contained in ASME A112.19.2-2003 shall be considered essential issues that pertain to health, safety, and water conservation: absorption (para. 2.1), load test (para. 2.8), trap seal (para. 3.3), water surface area (para. 3.4), water consumption (para. 5.1.3), granule and ball test (para. 5.1.4), and mixed media test (para. 5.1.6).

A4 SAMPLING

A recommended sampling scheme appropriate for the testing of 1.6 gpf (6 Lpf) water closets to the requirements contained in ASME A112.19.2-2003 follows. The sampling scheme is recommended for the initial certification and recertification. Testing agencies, third-party certifiers, and quality assurance agencies shall satisfy their specific internal requirements, which may be more or less stringent than those contained herein, when providing actual certification services to manufacturers.

(a) For initial certification, the manufacturer shall provide three samples of the model to be tested. One sample shall be chosen at random and tested to all requirements specified in ASME A112.19.2-2003.

(b) For recertification or verification of previously tested models, one sample shall be chosen at random from the entire inventory of the manufacturer's packed production. This sample shall be tested to all requirements specified in para. A3.

(c) In cases where a previously certified model fails to meet any of the requirements in para. A3 with the exception of the water consumption test (para. 5.1.3), the manufacturer shall make the necessary modifications to the product and notify the certification agency. Eight samples from packed inventory shall be chosen at random and subjected to the requirement(s) of para. A3 that the recertification sample failed. All eight samples shall pass the requirement(s) in order to reestablish certification.

In cases where a previously certified model fails to meet the requirements of the water consumption test (para. 5.1.3), the manufacturer shall make any necessary modifications and notify the inspection agency. Eight samples from packed inventory shall be chosen at random and tested for water consumption requirements only. The results shall be calculated by applying a "Student's *t*" one-sided confidence interval employing a 90% upper confidence level and a *D* factor of 1.1, which is the criteria used to certify consumption to the U.S. Department of Energy per the auspices of the Energy Policy Act of 1992 (EPACT).

Copyright ASME International
Provided by IHS under license with ASME
No reproduction or networking permitted without license from IHS
Not for Resale

NONMANDATORY APPENDIX B
ILLUSTRATIONS

NOTE: The illustrations in this Appendix shall not be interpreted as mandatory requirements. They are only presented for informational and historical purposes, for convenience, and for locating typical dimensions. Unless specifically referenced in the body of ASME A112.19.2, the illustrations shall not be used to indicate additional standard or required designs, and manufacturer's rough-in specifications shall take precedence.

B1 WATER CLOSETS

B1.1 Top Contours (Water Closet Bowls)

Typical top contours are shown in Fig. B1.

B1.2 Water Closet Styles

B1.2.1 Close-Coupled Water Closets (See Figs. B2 and B3). A water closet bowl with a separate tank secured to and supported by the water closet bowl, and with a separate tank cover.

B1.2.2 Wall-Mounted Water Closets (See Figs. B4 and B5). A water closet bowl for flushometer valve and for separate gravity type tank or flushometer tank, secured to the wall.

B1.2.3 One-Piece Water Closets (See Fig. B6). A single-piece water closet bowl and gravity type tank or pressurized flushing device, with a separate tank cover.

B1.2.4 Flushometer-Valve Water Closets (See Fig. B7). A floor-mounted, floor-outlet water closet bowl designed for use with a flushometer valve.

B2 LAVATORY TYPES

B2.1 Lavatories With Back (See Fig. B8)

Nominal sizes are 18 × 15 in. (457 × 381 mm), 20 × 18 in. (508 × 457 mm), 24 × 20 in. (610 × 508 mm), and 24 × 21 in. (610 × 533 mm).

B2.2 Ledge-Back Lavatories (See Fig. B9)

Nominal sizes are 19 × 17 in. (483 × 432 mm), 20 × 18 in. (508 × 457 mm), 22 × 18 in. (559 × 457 mm), and 24 × 20 in. (610 × 508 mm).

B2.3 Shelf-Back Lavatories (See Fig. B10)

Faucet holes shall be located either in the front wall of shelf-back or in an inclined panel. Nominal sizes are 19 × 17 in. (483 × 432 mm), 20 × 18 in. (508 × 457 mm), 22 × 18 in. (559 × 457 mm), and 24 × 20 in. (610 × 508 mm).

B2.4 Slab-Back Lavatories (See Fig. B11)

Faucet holes shall be located in top of slab. Wall brackets shall be required when lavatory is supported by china or metal legs. Nominal sizes are 20 × 18 in. (508 × 457 mm), 24 × 20 in. (610 × 508 mm), and 24 × 21 in. (610 × 533 mm).

B2.5 Flat-Rim Lavatories (See Fig. B12)

Faucet holes shall be located in top of slab. Nominal sizes are rectangular 20 × 18 in. (508 × 457 mm) and 19 × 20 in. (483 × 508 mm), and round 18 in. (457 mm) diameter.

B2.6 Self-Rimming Lavatories (See Figs. B13 Through B15)

Faucet holes shall be located in top of slab. Nominal sizes are rectangular 22 × 19 in. (559 × 483 mm), 21 × 19 in. (533 × 483 mm), 19 × 16 in. (483 × 406 mm), and 21 × 13 in. (533 × 330 mm); oval 20 × 17 in. (508 × 432 mm), 19 × 16 in. (483 × 406 mm), and 19 × 15 in. (483 × 381 mm); and round 19 in. (483 mm) and 18 in. (457 mm) diameters.

B2.7 Corner Lavatories With Shelf-Back (See Fig. B16)

Faucet holes shall be permitted to be located in front of wall of back shelf or in inclined panel. Nominal size is 17 × 17 in. (432 × 432 mm).

B3 URINAL TYPES

B3.1 Stall Urinal (See Fig. B17)

Fixture shall have either straight or sloped front and integral flush spreader. Seam covers shall be permitted to be furnished, if specified, for 21 in. (533 mm) and 24 in. (610 mm) center installations.

B3.2 Wall-Mounted Blowout Urinal With Extended Shields (See Fig. B18)

Fixture shall have integral flush spreader, jet, open trapway, and extended shields, all molded in the ware.

B3.3 Wall-Mounted Blowout Urinal (See Fig. B19)

Fixture shall have integral flushing rim and trap, all molded in the ware.

Copyright ASME International
Provided by IHS under license with ASME
No reproduction or networking permitted without license from IHS
Not for Resale

B3.4 Wall-Mounted Siphon-Jet Urinal With Extended Shields (See Fig. B20)

Fixture shall have integral flush spreader, top inlet, siphon trapway with jet, and extended shields, all molded in the ware.

B3.5 Wall-Mounted Siphon-Jet Urinal (See Fig. B21)

Fixture shall have integral flush spreader, top inlet, and siphon trapway with jet, all molded in the ware.

B3.6 Wall-Mounted Washout Urinal With Extended Shields (See Fig. B22)

Fixture shall have extended shields molded in the ware, and may have either a separate removable strainer or an open trapway.

B3.7 Wall-Mounted Washout Urinal With Bottom Outlet (See Fig. B23)

Fixture shall have top inlet; bottom outlet; either a flushing rim or a flush spreader; and a separate removable strainer, integral strainer, or open trapway.

B4 DRINKING FOUNTAIN TYPES

B4.1 Drinking Fountain With Splash Back

See Fig. B24.

B4.2 Drinking Fountain, Semirecessed

See Fig. B25.

B4.3 Drinking Fountain, Recessed

See Fig. B26.

B5 SERVICE SINKS, WITH AND WITHOUT SPLASH BACK

Faucet hole drillings, vent provided, shall conform to Fig. B27.

B6 PERINEAL (SITZ) BATHS

See Fig. B28.

B7 BIDETS

See Fig. B29.

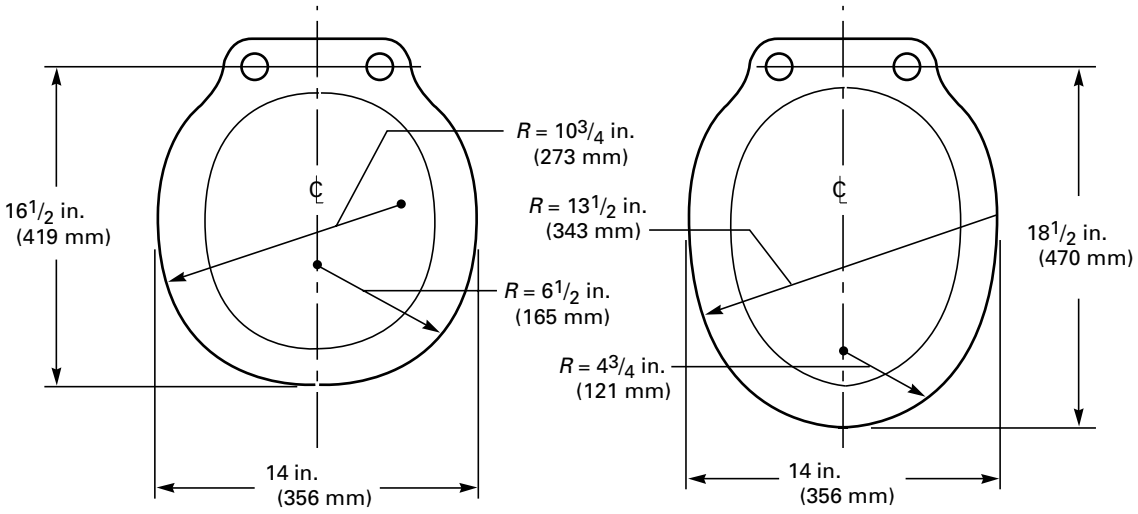

Fig. B1 Typical Top Contour for Water Closet Bowls

Copyright ASME International
Provided by IHS under license with ASME
No reproduction or networking permitted without license from IHS
Not for Resale

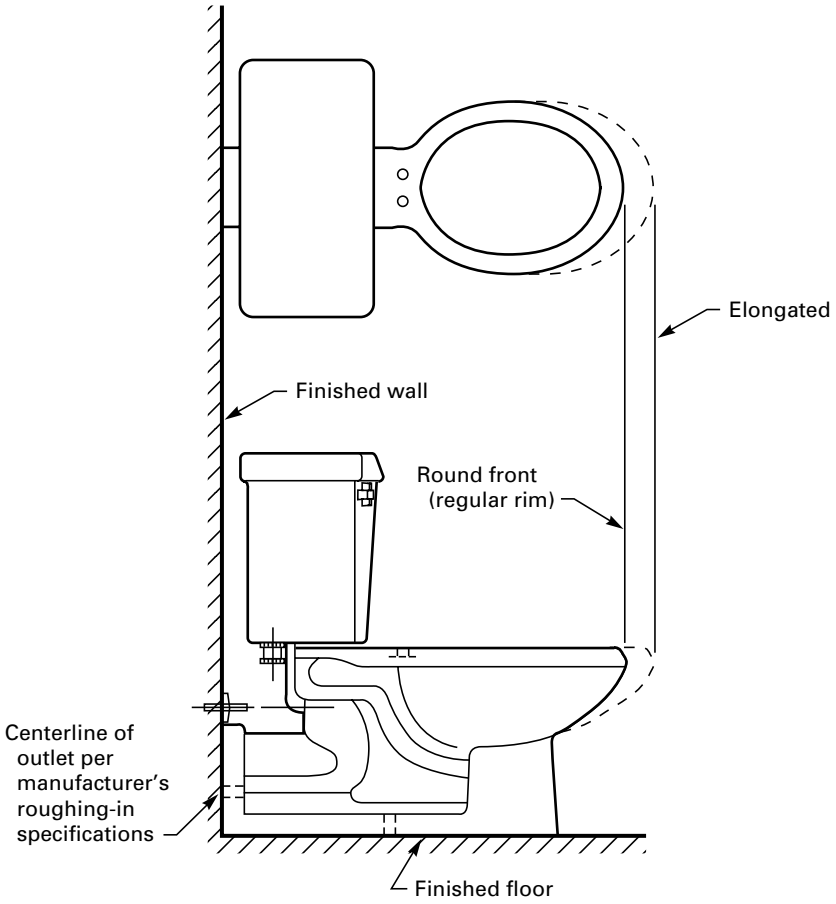

Fig. B2 Close-Coupled Water Closet, Floor Mounted, Back Outlet

Copyright ASME International
Provided by IHS under license with ASME
No reproduction or networking permitted without license from IHS Not for Resale

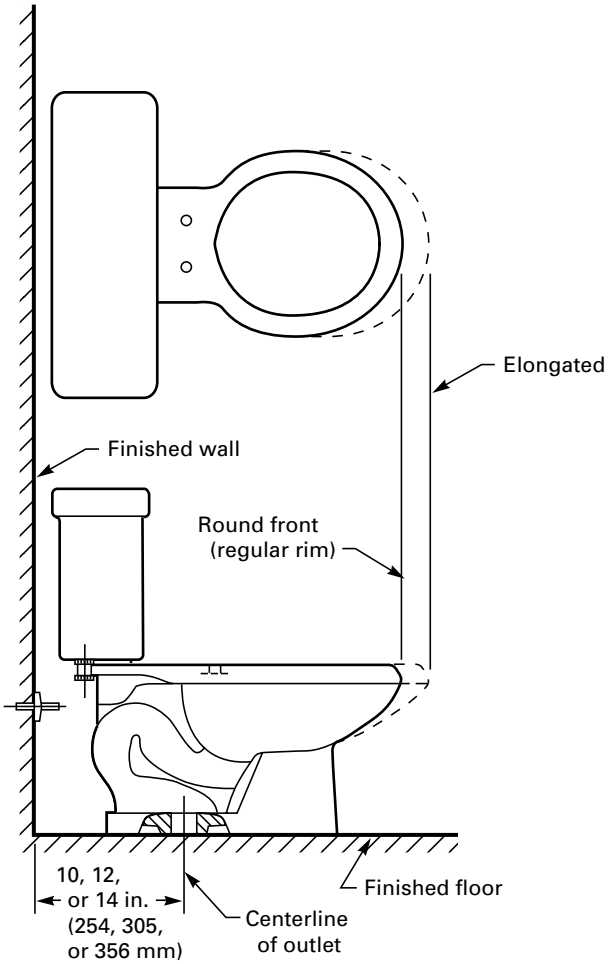

Fig. B3 Close-Coupled Water Closet, Floor Mounted

Copyright ASME International
Provided by IHS under license with ASME
No reproduction or networking permitted without license from IHS
Not for Resale

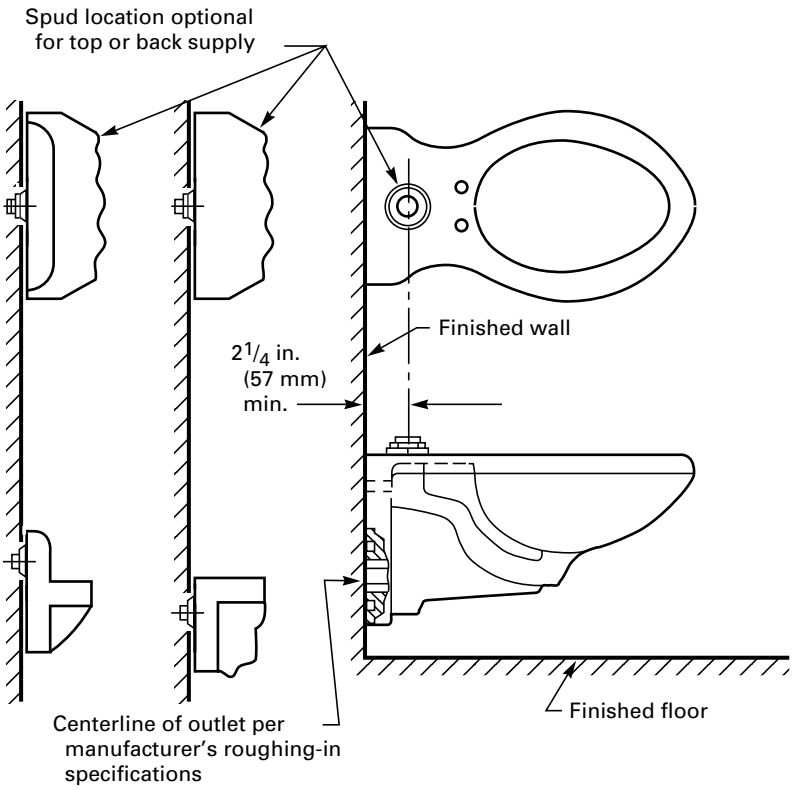

Fig. B4 Wall-Mounted Water Closet Bowl for Flushometer Valve

Copyright ASME International
Provided by IHS under license with ASME
No reproduction or networking permitted without license from IHS Not for Resale

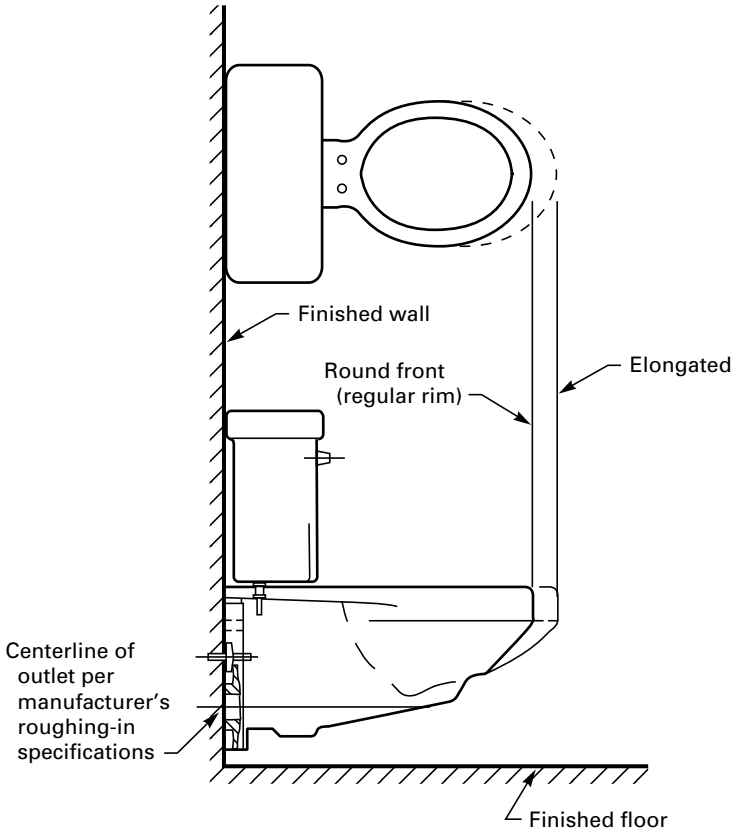

Fig. B5 Close-Coupled Wall-Mounted Water Closet

--`,,```,,,,````-`-`,,`,,`,`,,`---
Copyright ASME International
Provided by IHS under license with ASME
No reproduction or networking permitted without license from IHS
Not for Resale

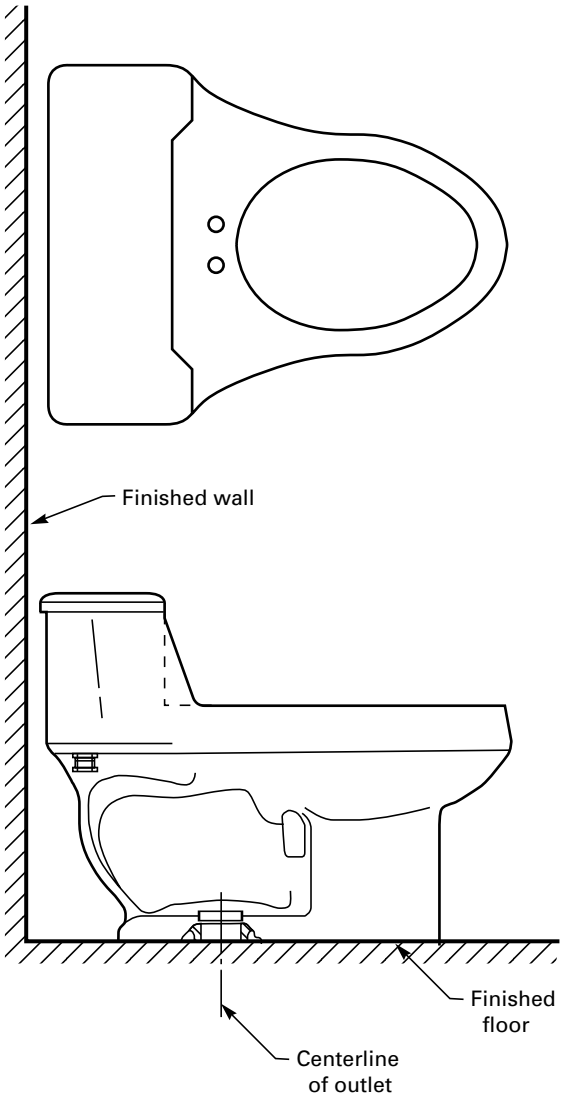

GENERAL NOTES:
(a) Where seat is fastened to tank, spacing between bolt-hole centers shall be 7 in. (178 mm).
(b) Tank height shall be optional.

Fig. B6 One-Piece Water Closet

Copyright ASME International
Provided by IHS under license with ASME
No reproduction or networking permitted without license from IHS
Not for Resale

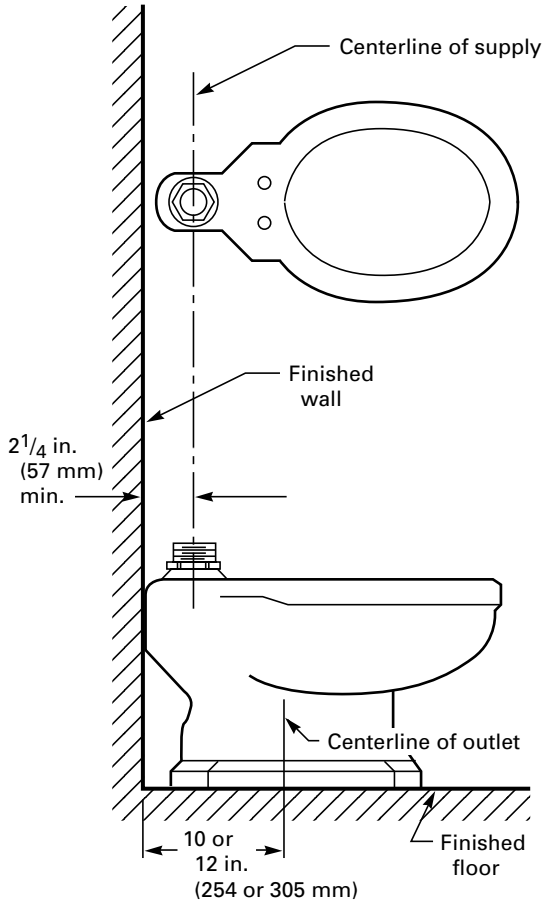

Fig. B7 Top-Inlet Water Closet for Flushometer Valve

Copyright ASME International
Provided by IHS under license with ASME
No reproduction or networking permitted without license from IHS
Not for Resale

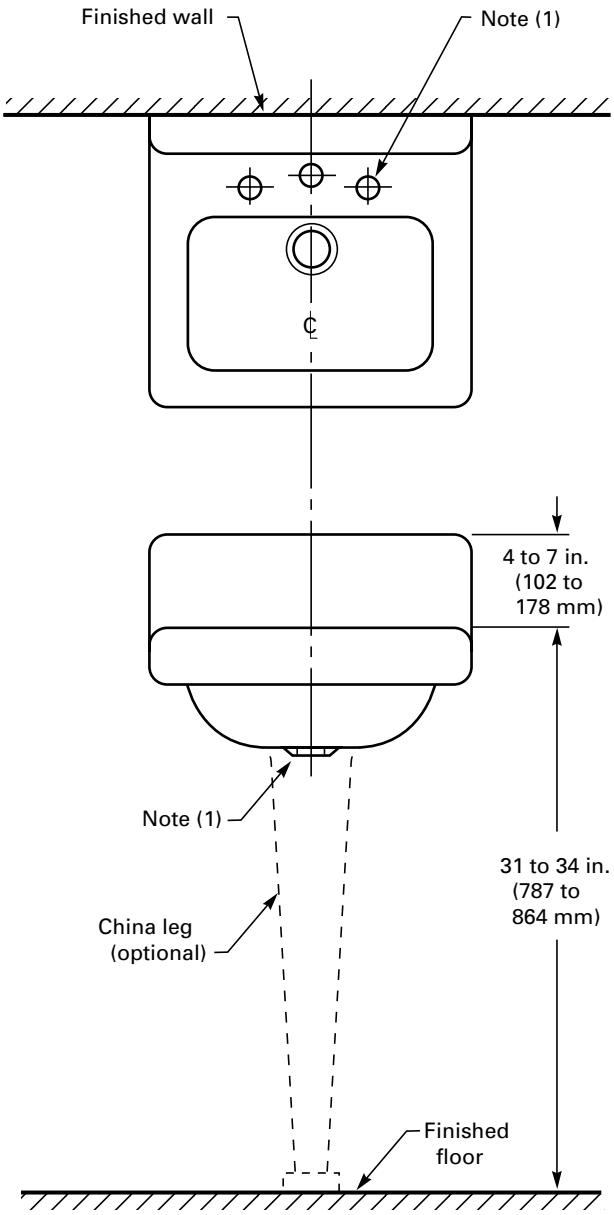

NOTE:
(1) Supply punchings and outlets shall be as shown in Fig. 6.

Fig. B8 Lavatories With Back

Copyright ASME International
Provided by IHS under license with ASME
No reproduction or networking permitted without license from IHS
Not for Resale

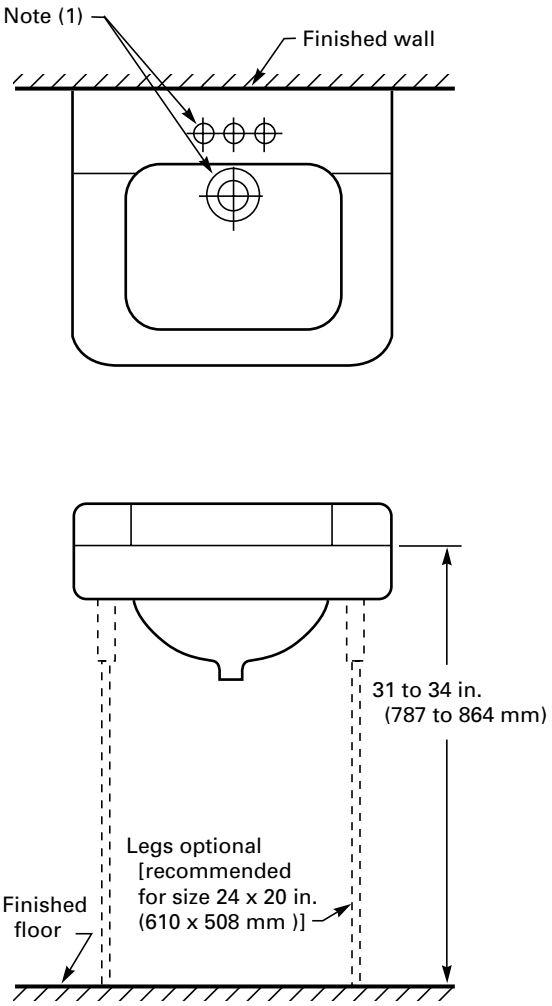

NOTE:
(1) Supply punchings and outlets shall be as shown in Fig. 6.

Fig. B9 Ledge-Back Lavatories

Copyright ASME International
Provided by IHS under license with ASME
No reproduction or networking permitted without license from IHS
Not for Resale

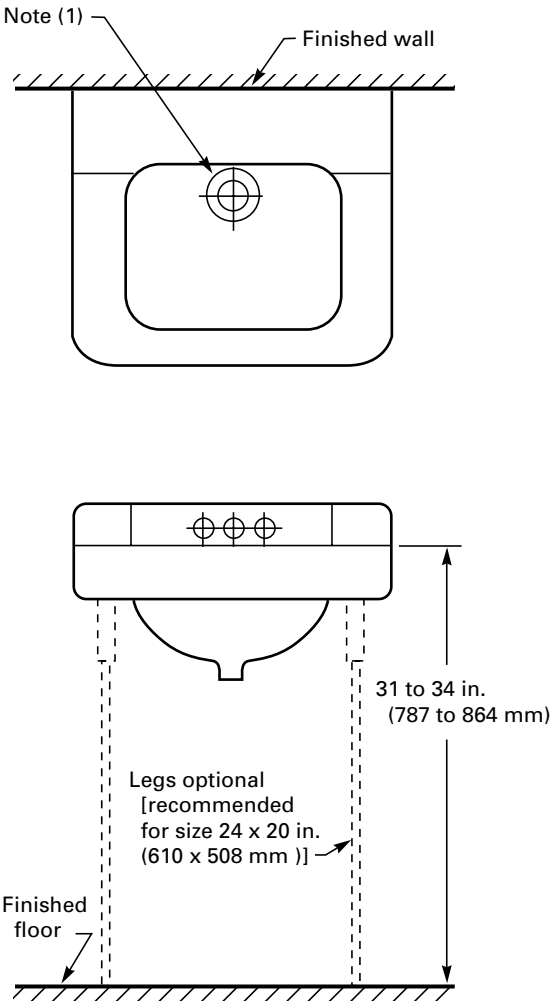

NOTE:
(1) Supply punchings and outlets shall be as shown in Fig. 6.

Fig. B10 Shelf-Back Lavatories

Copyright ASME International
Provided by IHS under license with ASME
No reproduction or networking permitted without license from IHS
Not for Resale

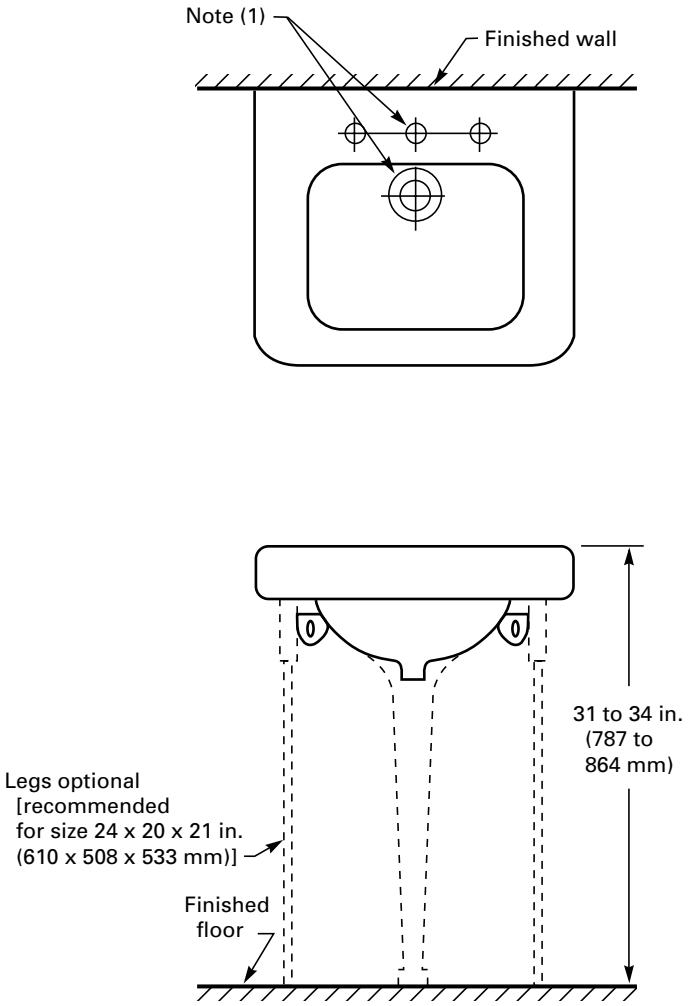

NOTE:
(1) Supply punchings and outlets shall be as shown in Fig. 6.

Fig. B11 Slab-Back Lavatories

Copyright ASME International
Provided by IHS under license with ASME
No reproduction or networking permitted without license from IHS
Not for Resale

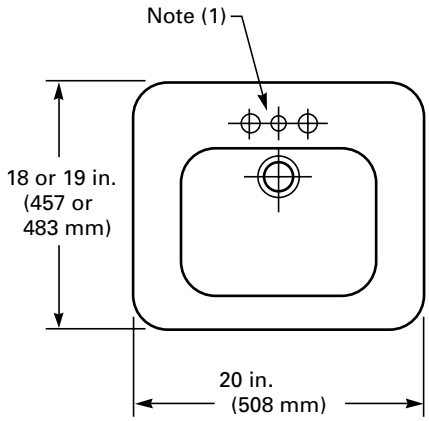

(a) Rectangular

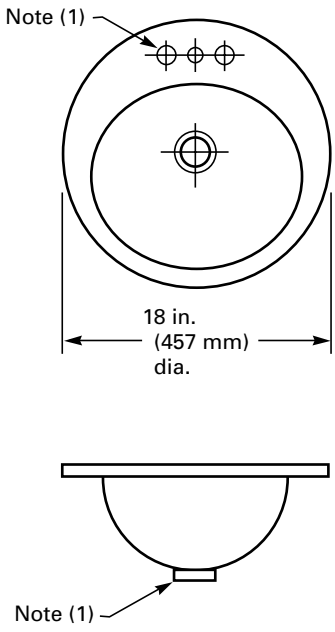

(b) Round

NOTE:
(1) Supply punchings and outlets shall be as shown in Fig. 6.

Fig. B12 Flat-Rim Lavatories

Copyright ASME International
Provided by IHS under license with ASME
No reproduction or networking permitted without license from IHS
Not for Resale

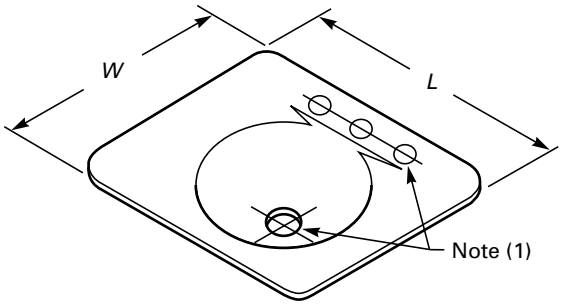

Common Sizes, in. (mm)	
L	*W*
22 (558)	19 (483)
21 (533)	19 (483)
19 (483)	16 (406)

(a)

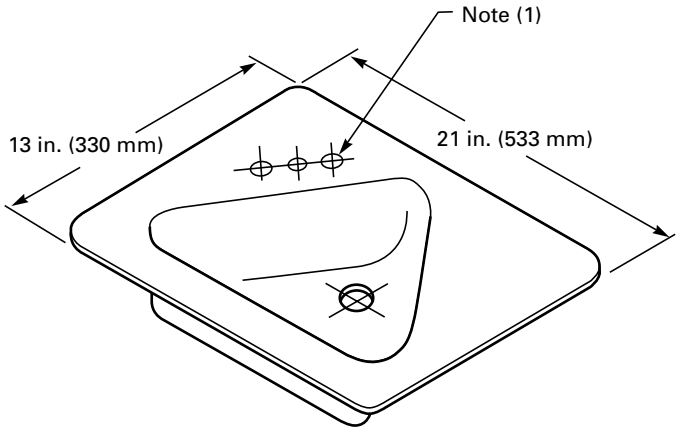

(b)

NOTE:
(1) Supply punchings and outlets shall be as shown in Fig. 6.

Fig. B13 Rectangular Self-Rimming Lavatories

Copyright ASME International
Provided by IHS under license with ASME
No reproduction or networking permitted without license from IHS
Not for Resale

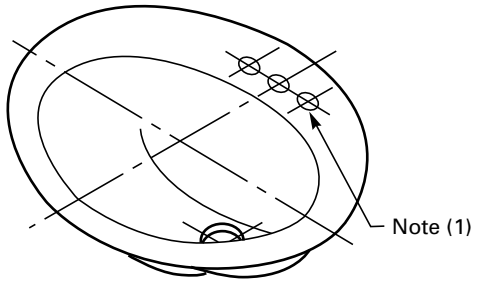

Common Sizes, in. (mm)
20 x 17 (508 x 432)
19 x 16 (483 x 406)

NOTE:
(1) Supply punchings and outlets shall be as shown in Fig. 6.

Fig. B14 Oval Self-Rimming Lavatory

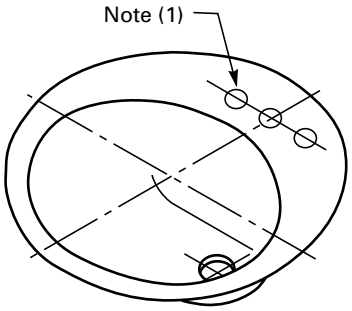

Common Sizes, in. (mm)
18 (457) dia.
19 (483) dia.

NOTE:
(1) Supply punchings and outlets shall be as shown in Fig. 6.

Fig. B15 Round Self-Rimming Lavatory

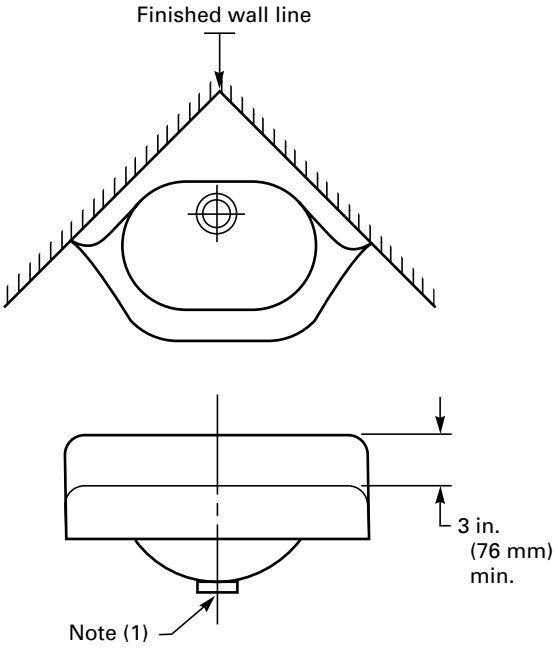

GENERAL NOTE: Faucet hole size and location as determined by manufacturer.

NOTE:
(1) Outlet as shown in Fig. 6.

Fig. B16 Corner Lavatory

--`,,```,,,,````-`-`,,`,,`,`,,`---

Copyright ASME International
Provided by IHS under license with ASME
No reproduction or networking permitted without license from IHS
Not for Resale

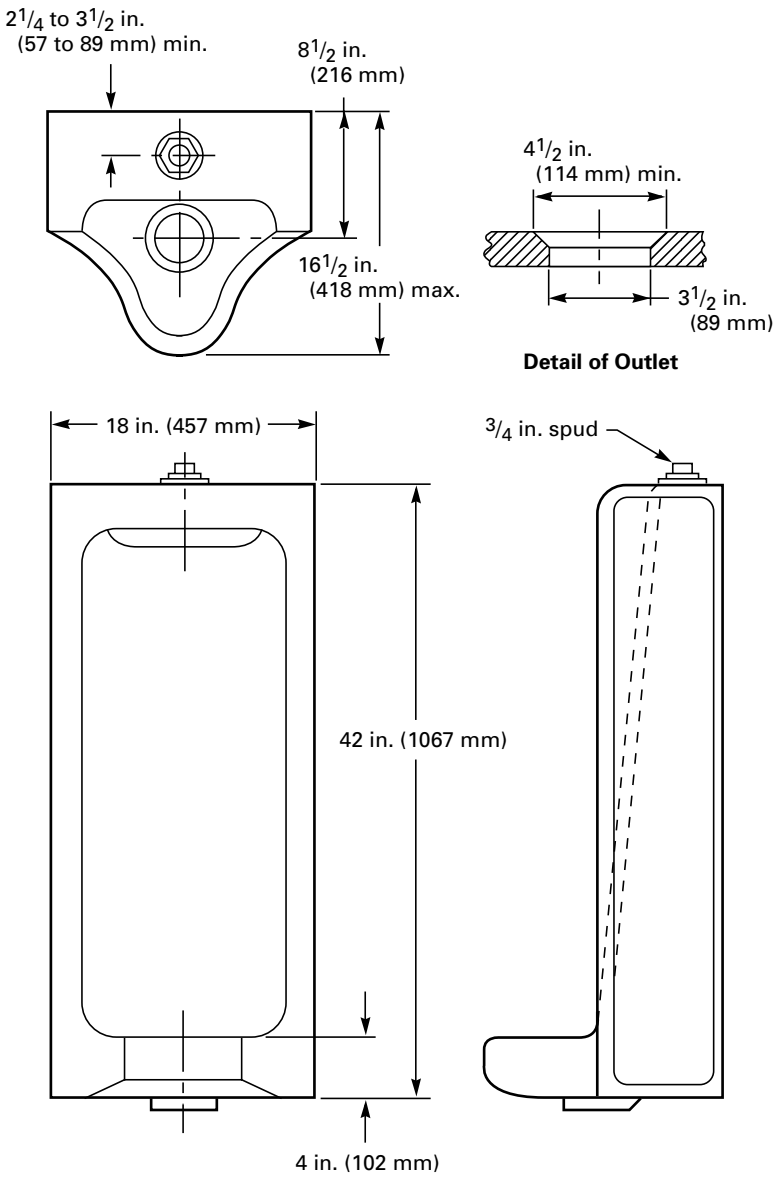

GENERAL NOTE: Front shall be either straight or sloped.

Fig. B17 Stall Urinal

Copyright ASME International
Provided by IHS under license with ASME
No reproduction or networking permitted without license from IHS
Not for Resale

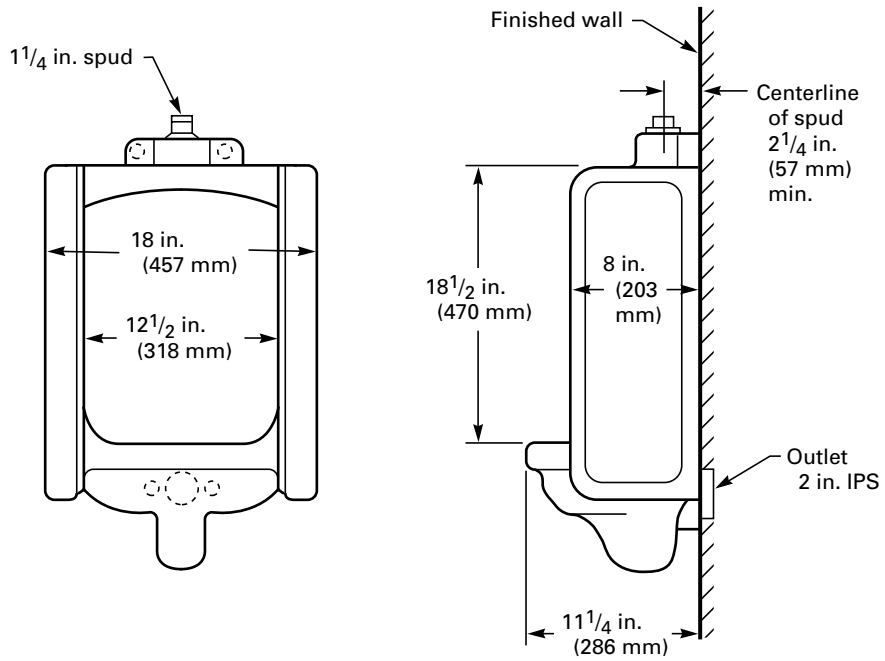

Fig. B18 Wall-Mounted Blowout Urinal With Extended Shields

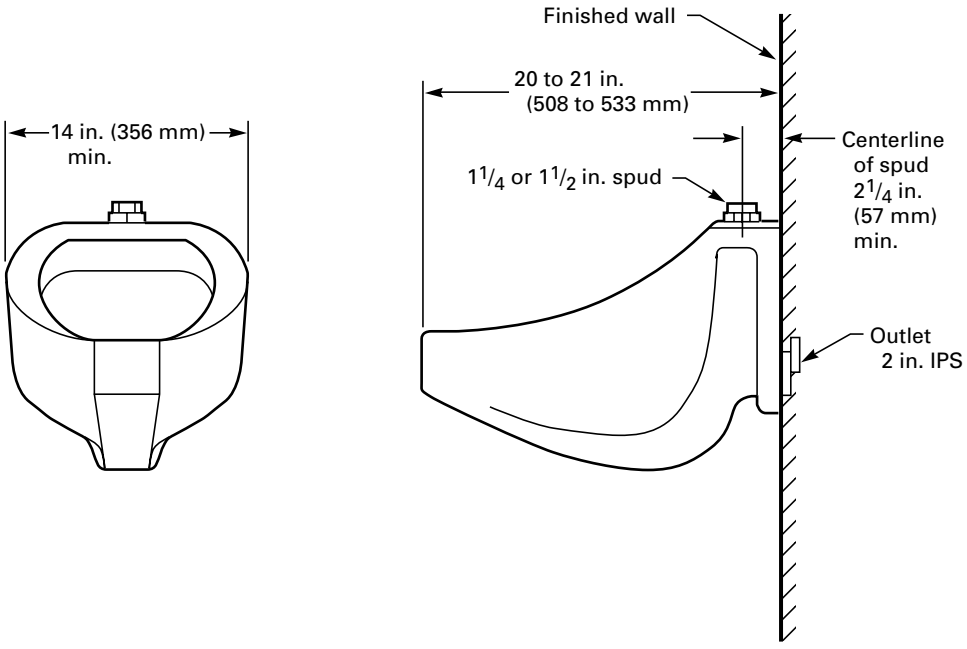

Fig. B19 Wall-Mounted Blowout Urinal

Copyright ASME International
Provided by IHS under license with ASME
No reproduction or networking permitted without license from IHS
Not for Resale

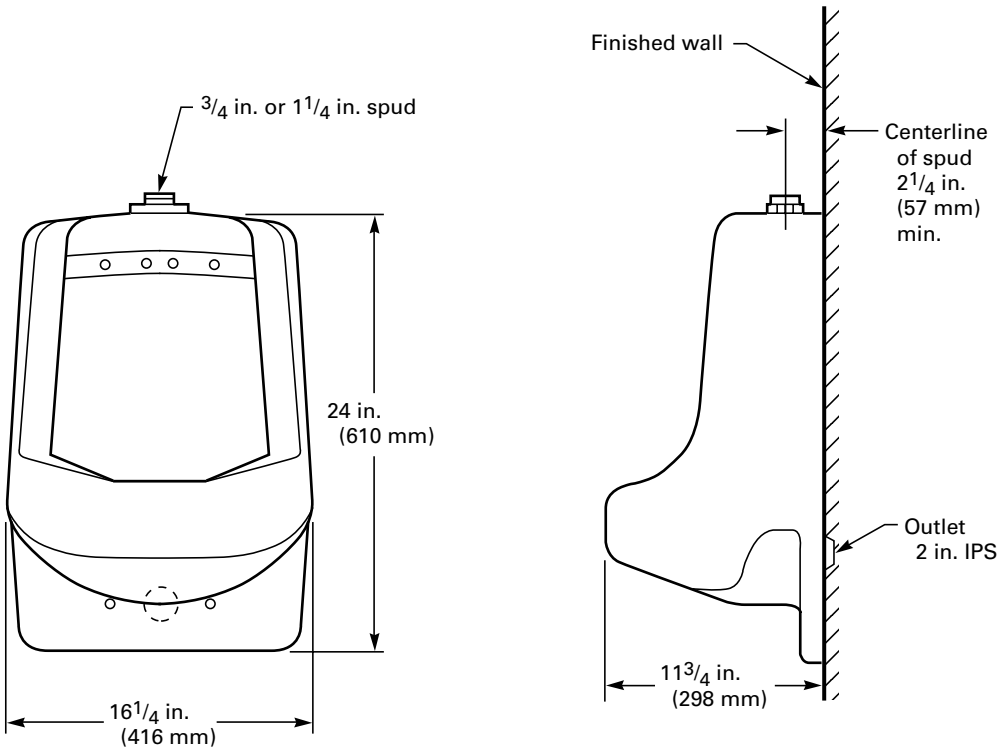

Fig. B20 Wall-Mounted Siphon-Jet Urinal With Extended Shields

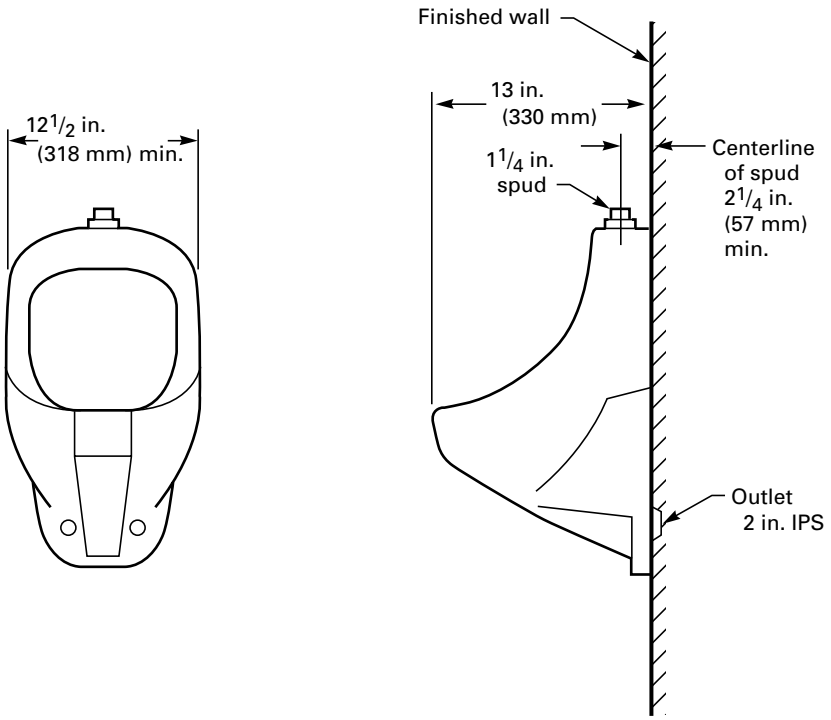

Fig. B21 Wall-Mounted Siphon-Jet Urinal

Copyright ASME International
Provided by IHS under license with ASME
No reproduction or networking permitted without license from IHS
Not for Resale

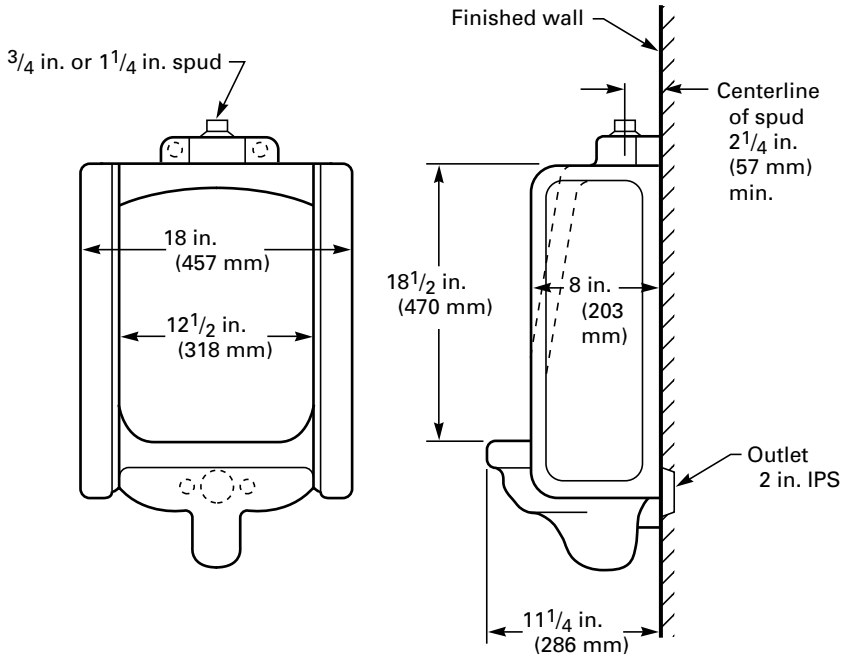

Fig. B22 Wall-Mounted Washout Urinal With Extended Shields

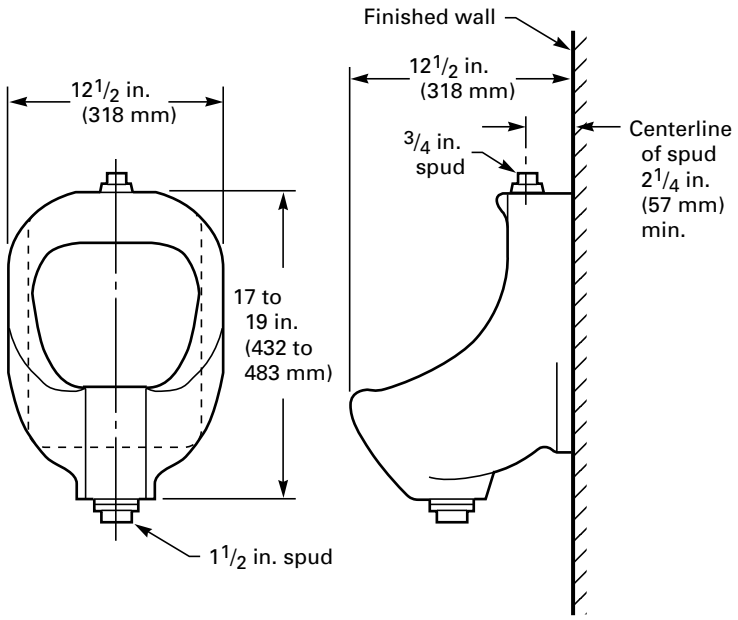

Fig. B23 Wall-Mounted Washout Urinal With Bottom Outlet

Copyright ASME International
Provided by IHS under license with ASME
No reproduction or networking permitted without license from IHS
Not for Resale

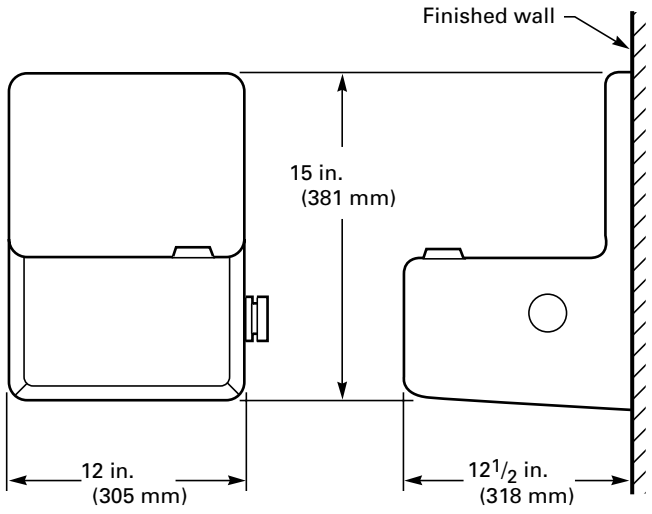

GENERAL NOTE: All dimensions shown are minimums.

Fig. B24 Drinking Fountain With Splash Back

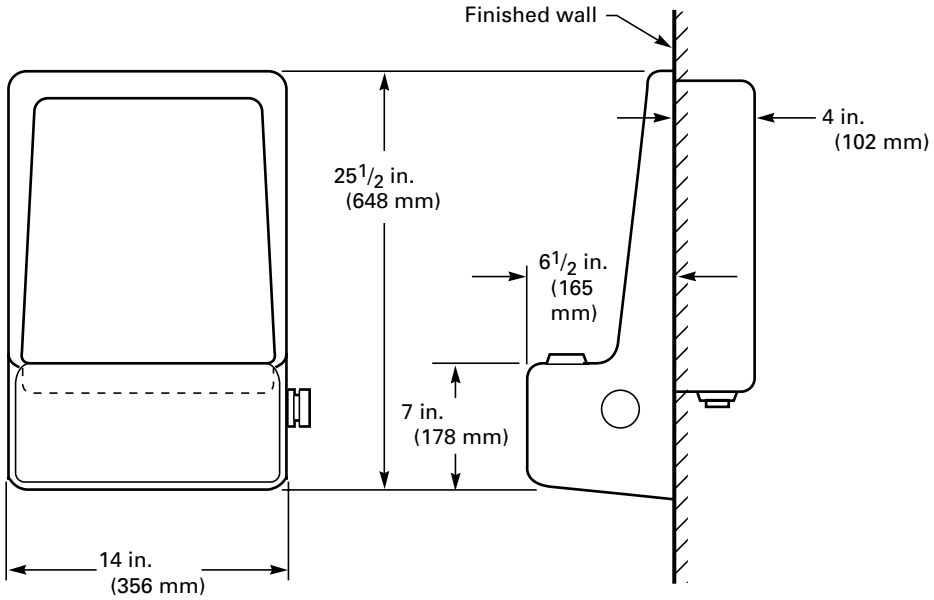

GENERAL NOTE: All dimensions shown are minimums.

Fig. B25 Drinking Fountain, Semirecessed

--`,,```,,,,````-`-`,,`,,`,`,,`---

Copyright ASME International
Provided by IHS under license with ASME
No reproduction or networking permitted without license from IHS
Not for Resale

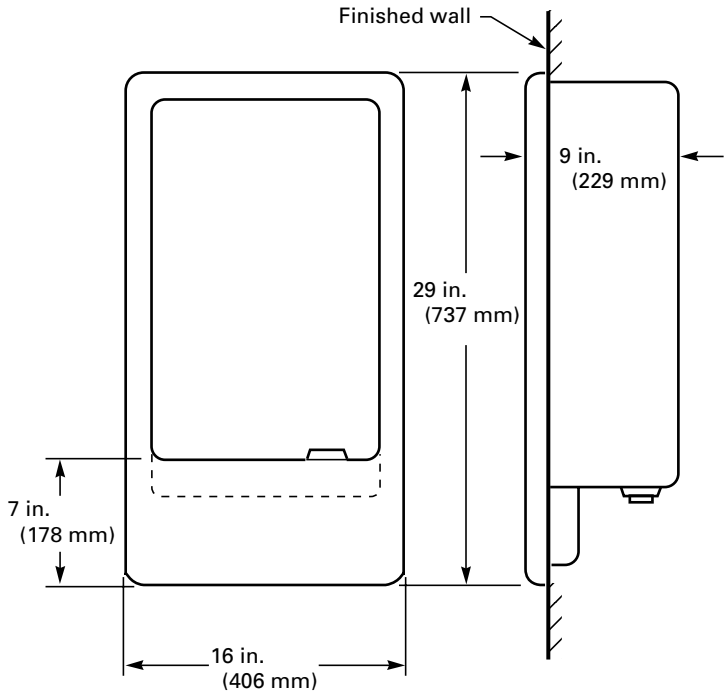

GENERAL NOTE: All dimensions shown are minimums.

Fig. B26 Drinking Fountain, Recessed

Copyright ASME International
Provided by IHS under license with ASME
No reproduction or networking permitted without license from IHS
Not for Resale

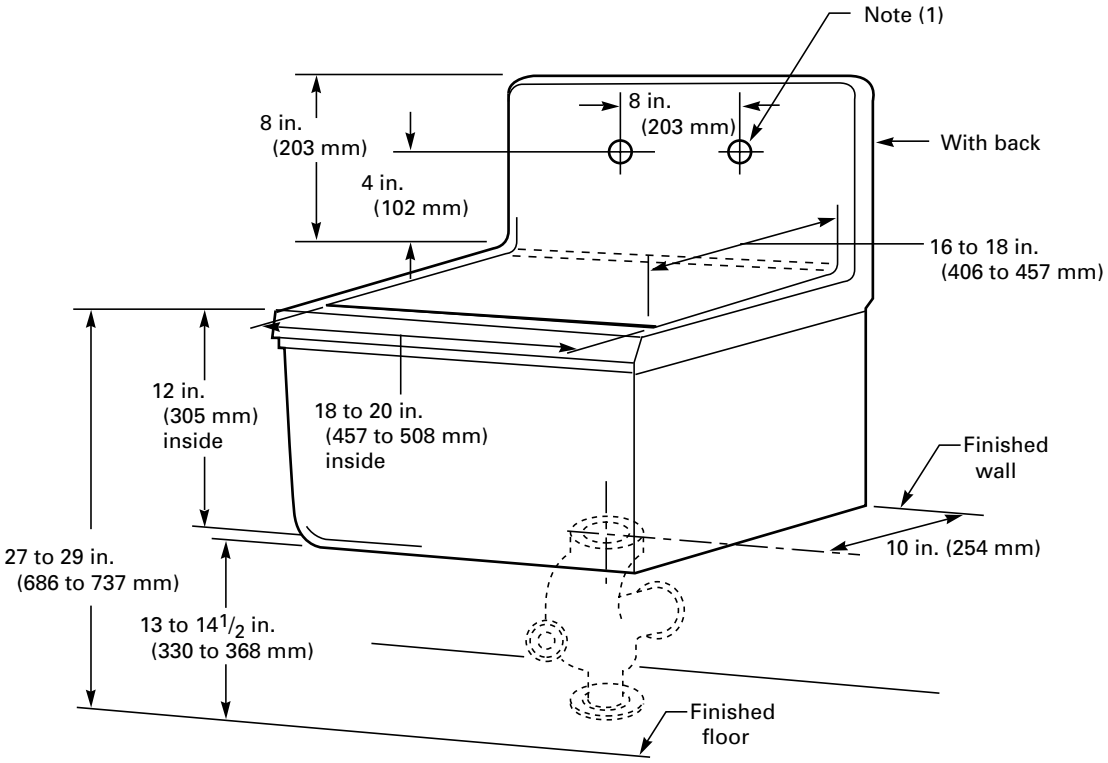

NOTE:
(1) When holes are provided, punchings shall be as shown.

Fig. B27 Service Sink

Copyright ASME International
Provided by IHS under license with ASME
No reproduction or networking permitted without license from IHS
Not for Resale

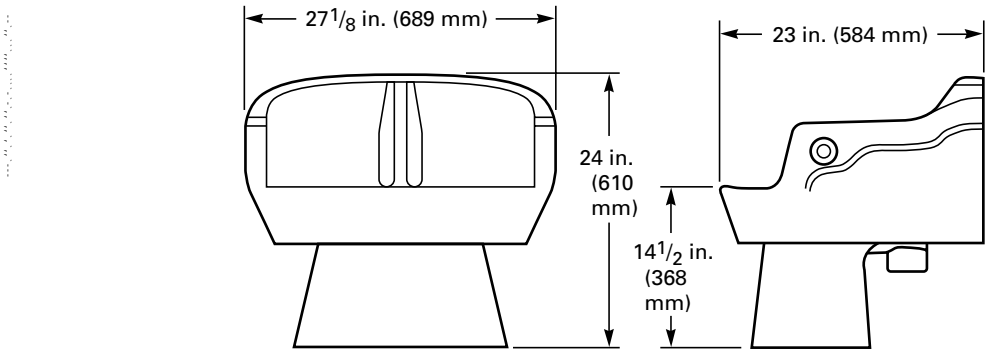

GENERAL NOTE: Nominal dimensions are shown.

Fig. B28 Perineal (Sitz) Bath

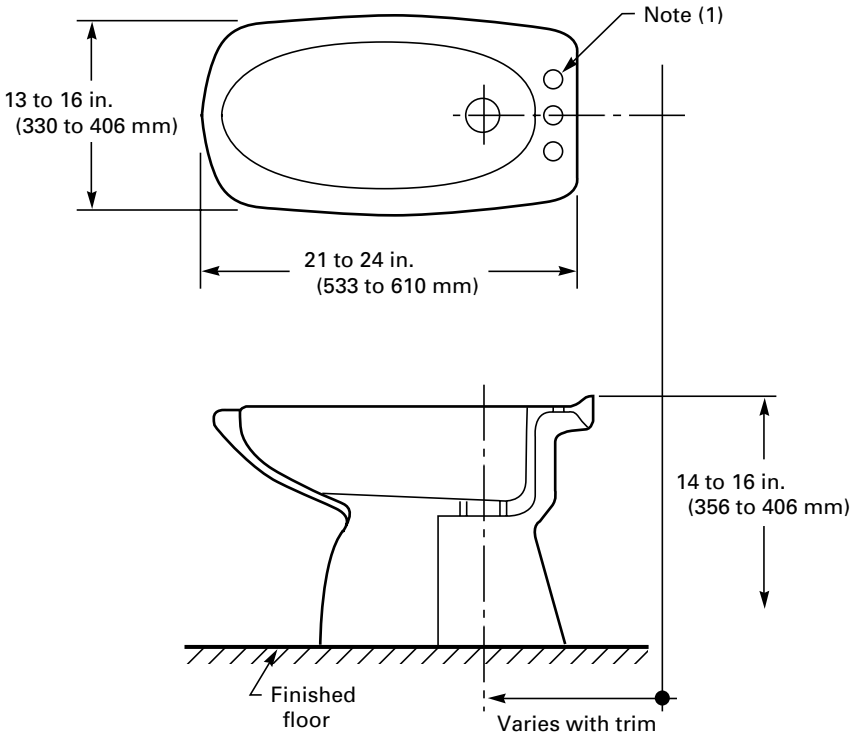

NOTE:
(1) Supply punchings and outlet as shown in Fig. 6.

Fig. B29 Bidet

Copyright ASME International
Provided by IHS under license with ASME
No reproduction or networking permitted without license from IHS Not for Resale

NONMANDATORY APPENDIX C
GOVERNMENT REQUIREMENTS

C1 SCOPE

This Appendix covers requirements of the Federal Government for the procurement of vitreous china plumbing fixtures.

C2 APPLICABLE DOCUMENT

The following document of the issues in effect on the date of invitation for bids or request for proposal forms a part of this Appendix to the extent specified herein:

ANSI/ASQC Z1.4, Sampling Procedures and Tables for Inspection by Attributes[1]

Publisher: American Society for Quality (ASQ), P.O. Box 3005, Milwaukee, WI 53201-3005.

C3 REQUIREMENTS

C3.1 Part or Identifying Number (PIN)

The plumbing fixtures covered by this ASME A112.19.2-2003 shall be identified by a PIN. This PIN number is intended for cataloging and ordering purposes (see para. C6) and not for surface marking on the product. The PIN shall be written as shown:

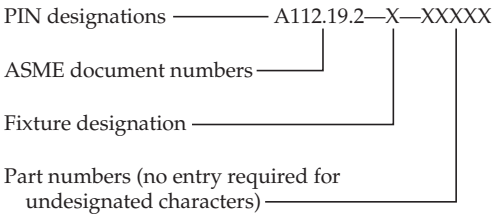

C3.1.1 Part Numbers for Water Closet (Fixture Designation = 1)

(a) First character denotes type of water closet bowl.
- *A* = siphon jet
- *B* = reverse trap
- *C* = wash-down
- *D* = blowout
- *E* = siphon vortex
- *F* = siphon wash
- *G* = others

(b) Second character denotes style.
- *1* = close-coupled (gravity tank type)
- *2* = close-coupled (flushometer tank type)
- *3* = wall-mounted tank (gravity tank type)
- *4* = wall-mounted tank (flushometer tank type)
- *5* = one piece (gravity tank type)
- *6* = one piece (flushometer tank type)
- *7* = flushometer valve type
- *8* = remote flushing device (specify)

(c) Third character denotes bowl height.
- *A* = standard height
- *B* = child
- *C* = juvenile
- *D* = handicapped/elderly

(d) Fourth character denotes rim contour.
- *1* = regular
- *2* = elongated

(e) Fifth character denotes mounting.
- *A* = floor mounted, floor outlet
- *B* = floor mounted, back outlet
- *C* = wall mounted, back outlet

(f) Sixth character denotes water consumption.
- *1* = conventional
- *2* = water saving
- *3* = low consumption

(g) Seventh character denotes insulated flush tank.
- *A* = required
- *B* = not required

(h) Eighth character denotes water supply spud size and location.
- *1* = 1½ in., top
- *2* = 1½ in., back
- *3* = 2 in., top
- *4* = 2 in., back
- *5* = not applicable

(i) Ninth character denotes color.
- *A* = white
- *B* = as specified (see para. C6)

(j) Tenth character denotes grade.
- *1* = first quality
- *2* = second quality

[1] May also be obtained from American National Standards Institute (ANSI), 25 West 43rd Street, New York, NY 10036.

Copyright ASME International
Provided by IHS under license with ASME
No reproduction or networking permitted without license from IHS
Not for Resale

C3.1.2 Part Numbers for Lavatory (Fixture Designation = 2)

(a) First character denotes type.
- *A* = with back
- *B* = ledge back
- *C* = shelf back
- *D* = slab type
- *E* = flat rim
- *F* = self-rimming
- *G* = wheelchair (handicapped)
- *H* = under counter

(b) Second character denotes overflow.
- *1* = required
- *2* = not required

(c) Third character denotes nominal size and shape.
- *A* = 18 in. × 15 in. rectangular
- *B* = 19 in. × 16 in. rectangular
- *C* = 19 in. × 17 in. rectangular
- *D* = 20 in. × 18 in. rectangular
- *E* = 20 in. × 19 in. rectangular
- *F* = 21 in. × 13 in. rectangular
- *G* = 21 in. × 19 in. rectangular
- *H* = 22 in. × 18 in. rectangular
- *J* = 22 in. × 19 in. rectangular
- *K* = 24 in. × 20 in. rectangular
- *L* = 24 in. × 21 in. rectangular
- *M* = 27 in. × 20 in. rectangular
- *N* = 17 in. × 17 in. triangular or corner
- *P* = 19 in. × 15 in. oval
- *R* = 19 in. × 16 in. oval
- *S* = 20 in. × 17 in. oval
- *T* = 18 in. round
- *U* = 19 in. round

(d) Fourth character denotes front anti-splash rim.
- *1* = required
- *2* = not required

(e) Fifth character denotes faucet hole punching.
- *A* = 1 hole
- *B* = 3 holes (2 in. centers)
- *C* = 3 holes (4 in. centers)

(f) Sixth character denotes faucet hole location.
- *1* = top
- *2* = front wall
- *3* = inclined panel

(g) Seventh character denotes mounting.
- *A* = countertop
- *B* = wall hung (for exposed arm carrier)
- *C* = wall hung (for concealed arm carrier)
- *D* = wall hung (for hanger-type carrier)
- *E* = metal legs
- *F* = pedestal

(h) Eighth character denotes color.
- *1* = white
- *2* = as specified (see para. C6)

(i) Ninth character denotes grade.
- *A* = first quality
- *B* = second quality

C3.1.3 Part Numbers for Urinal (Fixture Designation = 3)

(a) First character denotes type.
- *A* = stall, straight front, with seam cover for 21 in. centers
- *B* = stall, straight front, with seam cover for 24 in. centers
- *C* = stall, sloped front, with seam cover for 21 in. centers
- *D* = stall, sloped front, with seam cover for 24 in. centers
- *E* = wall-hanging blowout
- *F* = wall-hanging blowout with extended shields
- *G* = wall-hanging siphon jet
- *H* = wall-hanging siphon jet with extended shields
- *J* = wall-hanging washout with extended shields
- *K* = wall-hanging washout with bottom outlet
- *L* = wall-hanging wash-down with bottom outlet

(b) Second character denotes strainer or trapway.
- *1* = integral cast strainer
- *2* = separate removable strainer
- *3* = open trapway

(c) Third character denotes rim or spreader.
- *A* = flushing rim
- *B* = integral flush spreader
- *C* = not required

(d) Fourth character denotes water consumption.
- *1* = conventional
- *2* = water-saving
- *3* = low consumption

(e) Fifth character denotes water supply spud size.
- *A* = $\frac{3}{4}$ in.
- *B* = $1\frac{1}{4}$ in.
- *C* = $1\frac{1}{2}$ in.

(f) Sixth character denotes outlet size.
- *1* = $1\frac{1}{2}$ in.
- *2* = 2 in.
- *3* = 3 in.

(g) Seventh character denotes color.
- *1* = white
- *2* = as specified (see para. C6)

Copyright ASME International
Provided by IHS under license with ASME
No reproduction or networking permitted without license from IHS Not for Resale

(h) Eighth character denotes grade.
1 = first quality
2 = second quality

C3.1.4 Part Numbers for Service Sink (Fixture Designation = 4)

(a) First character denotes type.
A = with back
B = without back

(b) Second character denotes height of back.
1 = manufacturer's standard
2 = as specified (see para. C6)
3 = not applicable

(c) Third character denotes nominal size.
A = 22 in. × 20 in.
B = 27 in. × 20 in.
C = 31 in. × 20 in.

(d) Fourth character denotes mounting.
1 = with stand
2 = with trap standard
3 = wall hung

(e) Fifth character denotes color.
A = white
B = as specified (see para. C6)

(f) Sixth character denotes grade.
1 = first quality
2 = second quality

C3.1.5 Part Numbers for Drinking Fountain (Fixture Designation = 5)

(a) First character denotes type.
A = with back
B = semirecessed
C = recessed

(b) Second character denotes strainer.
1 = integral
2 = removable
3 = not required

(c) Third character denotes color.
1 = white
2 = as specified (see para. C6)

(d) Fourth character denotes grade.
A = first quality
B = second quality

C3.1.6 Part Numbers for Bidet (Fixture Designation = 6)

(a) First character denotes type.
A = with spray
B = with flushing rim
C = with spray and flushing rim
D = no spray or flushing rim

(b) Second character denotes mounting.
1 = wall hung
2 = floor mounted

(c) Third character denotes overflow.
A = required
B = not required

(d) Fourth character denotes faucet hole punching.
1 = 1 hole
2 = 2 holes
3 = 3 holes
4 = 4 holes
5 = no hole

(e) Fifth character denotes color.
A = white
B = as specified (see para. C6)

(f) Sixth character denotes grade.
1 = first quality
2 = second quality

C3.2 Standard Commercial Product

The plumbing fixtures shall, as a minimum, be in accordance with the requirements of this Standard. Features that are a part of the manufacturer's standard commercial product shall be included in the plumbing fixtures being furnished. A *standard commercial product* is a product that has been sold or is being currently offered for sale on the commercial market through advertisements, manufacturer's catalogs, or brochures, and represents the latest production model.

C3.3 Fixture Supports

Off-the-floor (wall-hung) fixture supports (carriers) conforming to ASME A112.6.1M shall be furnished on wall-hung plumbing fixtures.

C4 QUALITY ASSURANCE PROVISIONS

C4.1 Responsibility for Inspection

The contractor shall be responsible for the performance of all inspection requirements as specified herein. The contractor shall be permitted to use his/her own or any other facilities suitable for the performance of the inspection requirements unless disapproved by the Government. The Government reserves the right to perform any of the inspections set forth in ASME A112.19.2-2003 where such inspections are deemed necessary to assure supplies and services conform to prescribed requirements.

C4.2 Quality Conformance Inspection

When specified (see para. C6), a quality conformance inspection shall be required. The quality conformance inspection shall be performed on each sample selected

Copyright ASME International
Provided by IHS under license with ASME
No reproduction or networking permitted without license from IHS Not for Resale

(see para. C4.3) to determine compliance with ASME A112.19.2-2003 and shall include the following:

(a) Examination. This element of inspection shall encompass all visual examination and dimensional measurements. Noncompliance with any specified requirements shall constitute one defect. Examination shall be based on inspection level S-4 and an Acceptable Quality Level (AQL) of 2.5% defective.

(b) Test. Each sampled fixture shall be tested in accordance with the applicable performance test in this Standard. Failure to pass any test constitutes one defect. Test shall be based on inspection level S-2 and an AQL of 4.0% defective.

(c) Preparation for Delivery Inspection. Preparation for delivery shall be inspected for compliance with the requirements of para. C5.

C4.3 Sampling

Sampling and inspection procedures shall be in accordance with ANSI/ASQC Z1.4. The unit of product shall be one complete fixture. All fixtures of the same description offered for delivery at one time shall be considered a lot for the purpose of inspection. If an inspection lot is rejected, the contractor may rework it to correct the defects, or screen out the defective units, and resubmit for a complete inspection. Resubmitted lots shall be reinspected using tightened inspection. If the rejected lot was screened, reinspection shall be limited to the defect causing rejection. If the lot was reprocessed, reinspection shall be performed for all defects. Rejected lots shall be separate from new lots and shall be clearly identified as reinspected lots.

C5 PREPARATION FOR DELIVERY

The packaging, packing, and marking shall be as specified in the contract or purchase order (see para. C6).

C6 ORDERING DATA

Acquisition documents should specify the following:

(a) title, number, and date of this Standard

(b) PIN designation (see para. C3.1)

(c) height of service sink back (see para. C3.1.4)

(d) color (see paras. C3.1.1 through C3.1.6)

(e) when a quality performance inspection is required (see para. C4.2)

(f) preparation for delivery (see para. C5)

Copyright ASME International
Provided by IHS under license with ASME
No reproduction or networking permitted without license from IHS
Not for Resale

NONMANDATORY APPENDIX D
SUGGESTED FORMATS FOR REPORTING TEST RESULTS

See Tables D1 through D8.

Table D1 Volume and Cycle Time Test

Static Pressure, psi	Run No.	Flush Volume, gal			Cycle Time, sec	Trap Seal Restored? (Yes/No)	If Trap Seal Not Restored, Repeat H_r
		Main Flush	Total Flush	After Flush			
	1						
	2						
	3						
	1						
	2						
	3						
	1						
	2						
	3						
Average							

Table D2 Granule and Nylon Ball Test

Run No.	Number of Granules and Nylon Balls Remaining in Bowl After Initial Flush		Trap Seal Restored? (Yes/No)
	Granules	Nylon Balls	
1			
2			
3			

Copyright ASME International
Provided by IHS under license with ASME
No reproduction or networking permitted without license from IHS
Not for Resale

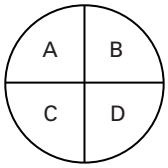

Table D3 Surface Wash

Run No.	Number of Segments	Position Quadrant	Individual Segment Length(s), in.	Total Length of Segments Remaining, in.
1				
2				
3				
			Average total length	

Table D4 Mixed Media Test

	Media Discharged, Initial Flush				Media Discharged, Second Flush			
	Number Flushed Out			Trap Seal Restored? (Yes/No)	Number Flushed Out			Trap Seal Restored? (Yes/No)
Run No.	Sponges	Balls	Total		Sponges	Balls	Total	
1								
2								
3								
4								

Table D5 Transport Test

Test no. _____
Test unit _____
Supply test pressure = _____psi
Average consumption/flush = _____gal (U.S.)
Average ball travel = _____ft

Category	First Run	Second Run	Third Run	Total Balls, Three Runs	Average Distance Traveled	Weighted Carry Distance
In bowl						
0–10 ft						
10–20 ft						
20–30 ft						
30–40 ft						
40–50 ft						
50–60 ft						
Over 60 ft						
			Total number of balls:			
			Total carry of all balls:			
			Average carry distance per ball:			

Copyright ASME International
Provided by IHS under license with ASME
No reproduction or networking permitted without license from IHS
Not for Resale

Table D6 Sample Calculation Table

Category	First Run	Second Run	Third Run	Total Balls, Three Runs	Average Distance Traveled	Weighted Carry Distance
In bowl	5	2	7	14	× 0 ft	0 ft
0–10 ft	14	22	15	51	× 5 ft	255 ft
10–20 ft	8	9	6	23	× 15 ft	345 ft
20–30 ft	5	2	4	11	× 25 ft	275 ft
30–40 ft	2	0	3	5	× 35 ft	175 ft
40–50 ft	5	8	2	15	× 45 ft	675 ft
50–60 ft	9	12	7	28	× 55 ft	1,540 ft
Over 60 ft	52	45	56	153	× 60 ft	9,180 ft

Total number of balls: 300
Total carry of all balls: 12,445 ft
Average carry distance per ball: 41.5 ft

GENERAL NOTE: This Table shows a sample calculation using hypothetical data.

Table D7 Flush Volume for Urinals

Static Pressure, psi	Run No.	Flush Volume, gal			Trap Seal Restored? (Yes/No)
		Main Flush	Total Flush	After Flush	
	1				
	2				
	3				
	1				
	2				
	3				
	Average				

GENERAL NOTES:
(a) See procedures in para. 10.6.
(b) Repeat for 80 psi (550 kPa) static pressures.

Table D8 Ink Test for Urinals

Static Pressure, psi	Test Run No.	Status of Ink Line After Initial Flush		
		Number of Segments	Individual Segment Length(s), in.	Total Length of Segments Remaining, in.
25	1			
	2			
	3			
			Average total length	

--`,,```,,,,````-`-`,,`,,`,`,,`---
Copyright ASME International
Provided by IHS under license with ASME
No reproduction or networking permitted without license from IHS
Not for Resale

NONMANDATORY APPENDIX E
TEST MATERIALS

The following test materials are needed:

(a) broad-tip pens, water soluble in two colors (most likely available through a reliable stationary or office store)

(b) polyballs and nylon balls

(c) granules

(d) sponges

(e) kraft paper

As a service to the industry, information on how to procure the above is available from IAPMO Testing and Services, 5001 East Philadelphia Street, Ontario, CA 91761; (909) 472-4134.

Copyright ASME International
Provided by IHS under license with ASME
No reproduction or networking permitted without license from IHS
Not for Resale

NONMANDATORY APPENDIX F
SUPPLEMENTARY PURCHASE SPECIFICATION: DISCHARGE ADJUSTMENT REQUIREMENTS FOR LOW-CONSUMPTION WATER CLOSETS

F1 GENERAL

F1.1 Scope

The following requirements are available for jurisdictions or other entities that wish to specify and/or purchase water closets to meet water conservation goals or facilitate water conservation programs.

F1.2 Purpose

The purpose of this nonmandatory appendix is to establish toilet design limits on the adjustable discharge capacity of water closets and durability requirements for formed flapper valve seals.

F2 GENERAL REQUIREMENTS

F2.1 Product Requirements

Any in-tank barrier, bucket, or dam that is designed to restrict, retard, or slow the flow of water through the open flush valve shall be tamperproof and permanently affixed to the tank, such that any attempt to tamper with or remove the barrier or dam by cutting or breaking it shall render the entire tank unusable.

F2.2 Discharge Adjustability Requirements

The toilet shall comply with the requirements in either para. F2.2.1 or para. F2.2.2.

F2.2.1 Maximum Capacity Test

(a) Purpose of Test. The objective of this test is to determine the maximum water-holding capacity of the toilet tank or other containment vessel internal to the tank. The maximum capacity shall not exceed 2.4 gal (9 L) as determined by para. F2.2.1(b).

(b) Test Procedure. Set an empty toilet tank only (with complete tank trim installed) on a leveled test stand.

(1) Fill the tank or containment vessel to a level 0.25 in. (6.35 mm) below the top of the overflow tube. Where the tank utilizes an internal containment vessel and does not possess an overflow tube, the vessel shall be filled to a level 0.25 in. (6.35 mm) below the top rim of the vessel or to the manufacturer's designated waterline, whichever is higher.

(2) Drain the tank (or vessel) into a graduated container by activating/flushing the tank trip lever and holding it until no more water drains out.

(c) Performance Requirement. Water collected in the graduated container shall not exceed an average of 2.4 gal (9 L) based on five test runs.

F2.2.2 Discharge Adjustability Test Requirement

(a) Purpose of Discharge Adjustability Test. The objective of this adjustability test is to determine the upper limit to the volume of water that may be discharged by the toilet, when field adjustment of original and aftermarket equipment tank trim is set at its maximum water-use setting.

(b) Requirements for Original Equipment. The maximum volume of water that may be discharged by the toilet, when field adjustment of original equipment tank trim is set at its maximum water-use setting, shall be 2.4 gal (9 L). The test procedure described in para. F2.2.2(c) shall be followed to verify that the toilet meets this requirement.

(c) Procedure for Discharge Adjustability Test. The water supply system shall be as specified in para. 8.1.1.

(1) The toilet shall be installed on a test stand and all adjustable tank trim components shall be adjusted for maximum water use, while taking care not to damage or alter the parts.

(2) The water level in the tank shall be set to 0.25 in. (6.35 mm) below the top of the overflow tube. Where the tank utilizes an internal containment vessel and does not possess an overflow tube, the vessel shall be filled to a level 0.25 in. (6.35 mm) below the top rim of the vessel or to the manufacturer's designated waterline, whichever is higher.

(3) The static pressure of the water supply shall be adjusted to 80 psi (550 kPa).

(4) The toilet shall be flushed, maintaining the activator in the flushing position for a period of 1 sec.

(5) After the flush cycle is complete, the total flush volume shall be observed and recorded.

(6) This procedure shall be repeated until five sets of data are obtained.

(7) Report. The five individual flush volumes and the average of the five runs shall be reported.

(8) Performance Requirement. The average total flush volume for five test runs shall not exceed 2.4 gal (9 L).

Copyright ASME International
Provided by IHS under license with ASME
No reproduction or networking permitted without license from IHS
Not for Resale

(d) Requirements for Aftermarket Closure Seals. The maximum volume of water that may be discharged by the toilet, when the original equipment flush valve seal (flapper or other sealing device) is replaced with a standard seal available in home improvement centers and hardware stores, and the field adjustment of tank trim is set at its maximum water-use setting, shall be 2.4 gal (9 L). The test procedure described in para. F2.2.2(f) shall be followed to verify that the toilet meets this requirement.

(e) Purpose of Aftermarket Closure Seal Test. The objective of this adjustability and aftermarket seal test is to determine the upper limit to the volume of water that may be discharged when an off-the-shelf replacement flush valve seal/flapper is installed on the toilet.

(f) Test Procedure for Aftermarket Closure Seal Test. The water supply system shall be as specified in para. 8.1.1.

(1) The toilet shall be installed on a test stand and all adjustable tank trim components shall be adjusted for maximum water use, while taking care not to damage or alter the parts.

(2) Remove the original equipment flush valve seal and replace it with a standard nonadjustable aftermarket seal/flapper for that toilet. In the case of a standard configuration flush valve, a Fluidmaster Bullseye Super flapper (part no. 501), Coast Foundry Ultra Blue flapper, or the equivalent shall be used. For nonstandard flush valves, one or more replacement seals available at hardware and building supply stores shall be used.

(3) The water level in the tank shall be set to 0.25 in. (6.35 mm) below the top of the overflow tube. Where the tank utilizes an internal containment vessel and does not possess an overflow tube, the vessel shall be filled to a level 0.25 in. (6.35 mm) below the top rim of the vessel or to the manufacturer's designated waterline, whichever is higher.

(4) The static pressure of the water supply shall be adjusted to 80 psi (550 kPa).

(5) The toilet shall be flushed, maintaining the activator in the flushing position for a period of 1 sec.

(6) After the flush cycle is complete, the total flush volume shall be observed and recorded.

(7) This procedure shall be repeated until five sets of data are obtained.

(8) Report. The five individual flush volumes and the average of the five runs shall be reported.

(9) Performance Requirement. The average total flush volume for five test runs shall not exceed 2.4 gal (9 L).

F3 FORMED FLAPPER VALVE ACCELERATED DURABILITY TEST

F3.1 Purpose

The purpose is to test a flapper valve seal in an accelerated aging environment to determine its likely integrity within a functioning toilet subjected to drop-in in-tank bowl cleaners.

NOTE: It is the intent that para. F3 shall be removed upon adoption, at an undetermined future date, of the flapper valve seal durability requirements to be specified within ASME A112.19.5.

F3.2 Scope

This test will assess the sealing characteristics of a formed flapper valve or other seal in two accelerated aging environments, each consisting of one of the following two commonly available consumer products: Clorox® Bleach or equivalent and 2000 Flushes® Bleach or equivalent. Upon completion of testing, the subject flapper valve will be evaluated as to its ability to withstand these drop-in bowl cleaners and maintain a "no leak" seal.

F3.3 Procedure

F3.3.1 Leak Rate Test. The following test is to be performed prior to and at the end of the accelerated test.

(a) Attach test specimen to valve seat (as specified by the manufacturer) in test apparatus. In this case, the apparatus consists of an 8 in. diameter clear PVC pipe attached to a flat piece of 0.25 in. (minimum) PVC flat stock and appropriately sealed. The valve seat shall be attached to the apparatus through the properly sized hole in the flat stock. The apparatus shall then be placed on top of a 3 L graduated beaker for the purpose of accurately monitoring and measuring any leaks.

NOTE: An alternate set of apparatus is permitted if it will enable the tester to provide the required environment for the test.

(b) Fill the test apparatus with tap water to the specified fill line. The temperature of the tap water shall be within a 61 to 80°F (16 to 27°C) range. The fill line shall be set at 7 in. (178 mm) above the valve seat, as this represents the lowest water level in most commercially available residential toilets.

(c) Lift the specimen and flush the test apparatus. Fill and repeat two more times. This allows the specimen to be wetted and to find its seat.

(d) Fill the test apparatus to the fill line. Allow the flapper to seat properly by leaving the setup undisturbed for 24 ± 1 hr.

(e) At the end of the 24 hr period, start the test. Test shall run for 1 hr.

(f) At the conclusion of the test, remove the test apparatus from the graduated beaker and inspect the beaker for any water that may have leaked from the test apparatus. If the beaker is dry, report as "no leaks." If water is present, determine the volume from the graduations on the beaker. If the volume is too small to determine from the large graduations on this size beaker, transfer the water to a smaller graduated beaker or cylinder for determination. Report the volume leaked as "xx ml/hr." If the volume is still too small to determine, report as "few drops."

Copyright ASME International
Provided by IHS under license with ASME
No reproduction or networking permitted without license from IHS Not for Resale

(g) Repeat the steps in paras. F3.3.1(a) through (f) at the conclusion of the accelerated test in para. F3.3.2.

(h) Criteria. Any leakage from the flapper shall be considered a failure.

F3.3.2 Accelerated Test. The following two drop-in bowl cleaners shall each be included as a separate test: Clorox® Bleach or equivalent and 2000 Flushes® Bleach or equivalent.

(a) A concentrated stock solution shall be made using each bowl cleaner. This concentration shall be at 2,000 ppm of total chlorine in a tap water solvent. For each stock solution, the steps in paras. F3.3.2(b) through (h) shall be followed.

(b) The stock solution shall be analyzed initially upon preparation and at each solution change, at which time the concentration level shall be recorded. In the event that an analysis indicates that the concentration of the stock solution has changed by more than 10% from that prepared in accordance with para. F3.3.2(a), the solution shall be discarded and a new stock solution prepared. The test specimen shall be inserted into a test vessel (jar or other suitable vessel) such that the sealing surface of the test specimen is not under physical stress. No more than one specimen per jar is allowed.

(c) The stock solution shall be added to the test vessel so as to completely cover the test specimen; fill the test vessel with the stock solution as completely as possible.

(d) The test vessel containing the stock solution and the test specimen shall then be placed in a mechanically convected oven or other device capable of maintaining a test temperature of 104 ± 5°F (40 ± 3°C). The test temperature shall be maintained at 104 ± 5°F (40 ± 3°C) for the 28 day duration of the accelerated test.

(e) The solution in the test vessel shall be changed daily (as permitted) with fresh stock solution.

(f) The test specimen shall be removed from the test vessel at the end of 28 days and within 1 hr subjected to the leak test specified in para. F3.3.1.

(g) The steps described in paras. F3.3.2(c) through (f) shall be repeated for each test specimen.

(h) To assist in verifying test accuracy, a minimum of two samples of each specimen shall be tested in each stock solution.

Copyright ASME International
Provided by IHS under license with ASME
No reproduction or networking permitted without license from IHS
Not for Resale

ASME STANDARDS RELATED TO PLUMBING

Air Gaps in Plumbing Systems . . . . . A112.1.2-1991(R2002)
Air Gap Fittings for Use With Plumbing Fixtures, Appliances, and Appurtenances A112.1.3-2000
Performance Standard and Installation Procedures for Stainless Steel Drainage Systems for Sanitary, Storm, and Chemical Applications, Above and Below Ground A112.3.1-1993
Macerating Toilet Systems and Related Components A112.3.4-2000
Water Heater Relief Valve Drain Tubes . . . . . A112.4.1-1993(R2002)
Water Closet Personal Hygiene Devices A112.4.2-2003
Plastic Fittings for Connecting Water Closets to the Sanitary Drainage System A112.4.3-1999
Point of Use and Branch Water Submetering Systems A112.4.7-2002
Floor-Affixed Supports for Off-the-Floor Plumbing Fixtures for Public Use . . . . . A112.6.1M-1997(R2002)
Framing-Affixed Supports for Off-the-Floor Water Closets With Concealed Tanks A112.6.2-2000
Floor and Trench Drains A112.6.3-2001
Roof, Deck, and Balcony Drains A112.6.4-2003
Enameled and Epoxy Coated Cast Iron and PVC Plastic Sanitary Floor Sinks A112.6.7-2001
Backwater Valves A112.14.1-2003
Grease Interceptors A112.14.3-2000
Grease Removal Devices A112.4.4-2001
Plumbing Fixture Fittings A112.18.1-2003
Plumbing Fixture Waste Fittings A112.18.2-2002
Performance Requirements for Backflow Protection Devices and Systems in Plumbing Fixture Fittings A112.18.3-2002
Flexible Water Connectors A112.18.6-2003
Deck-Mounted Bath/Shower Transfer Valves With Integral Backflow Protection A112.18.7-1999
Enameled Cast Iron Plumbing Fixtures . . . . . A112.19.1M-1994(R1999)
Vitreous China Plumbing Fixtures and Hydraulic Requirements for Water Closets and Urinals A112.19.2-2003
Stainless Steel Plumbing Fixtures (Designed for Residential Use) A112.19.3-2000
Porcelain Enameled Formed Steel Plumbing Fixtures . . . . . A112.19.4M-1994(R1999)
Trim for Water-Closet Bowls, Tanks, and Urinals A112.19.5-1999
Whirlpool Bathtub Appliances A112.19.7M-1995
Suction Fittings for Use in Swimming Pools, Wading Pools, Spas, Hot Tubs, and Whirlpool Bathtub Appliances . . . A112.19.8M-1987(R1996)
Non-Vitreous Ceramic Plumbing Fixtures . . . . . A112.19.9M-1991(R2002)
Dual Flush Devices for Water Closets A112.19.10-2003
Wall Mounted and Pedestal Mounted, Adjustable and Pivoting Lavatory and Sink Carrier Systems A112.19.12-2000
Electrohydraulic Water Closets A112.19.13-2001
Six-Liter Water Closets Equipped With a Dual Flushing Device A112.19.14-2001
Bathtub/Whirlpool Bathtubs With Pressure Sealed Doors A112.19.15-2001
Manufactured Safety Vacuum Release Systems (SVRS) for Residential and Commercial Swimming Pool, Spa, Hot Tub, and Wading Pool Suction Systems A112.19.17-2002
Qualification of Installers of High Purity Piping Systems A112.20.1-2004
Floor Drains . . . . . A112.21.1M-1991(R1998)
Roof Drains A112.21.2M-1983
Hydrants for Utility and Maintenance Use . . . . . A112.21.3M-1985(R2001)
Cleanouts . . . . . A112.36.2M-1991(R2002)

The ASME Publications Catalog shows a complete list of all the Standards published by the Society. For a complimentary catalog, or the latest information about our publications, call 1-800-THE-ASME (1-800-843-2763).

Copyright ASME International
Provided by IHS under license with ASME
No reproduction or networking permitted without license from IHS
Not for Resale

ASME A112.19.2-2003

ISBN 0-7918-2857-3





J01203

Copyright ASME International
Provided by IHS under license with ASME
No reproduction or networking permitted without license from IHS

Not for Resale