ASME A112.18.1-2005/CSA B125.1-05

Plumbing supply fittings



The American Society of Mechanical Engineers



CANADIAN STANDARDS ASSOCIATION

Copyright ASME International
Provided by IHS under license with ASME
No reproduction or networking permitted without license from IHS

Not for Resale

Legal Notice for Harmonized Standard Jointly Developed by ASME and CSA

Intellectual property rights and ownership

As between American Society of Mechanical Engineers ("ASME") and Canadian Standards Association ("CSA") (collectively "ASME and CSA") and the users of this document (whether it be in printed or electronic form), ASME and CSA are the joint owners of all works contained herein that are protected by copyright, all trade-marks (except as otherwise noted to the contrary), and all inventions and trade secrets that may be contained in this document, whether or not such inventions and trade secrets are protected by patents and applications for patents. The unauthorized use, modification, copying, or disclosure of this document may violate laws that protect the intellectual property of ASME and CSA and may give rise to a right in ASME and CSA to seek legal redress for such use, modification, copying, or disclosure. ASME and CSA reserve all intellectual property rights in this document.

Disclaimer and exclusion of liability

This document is provided without any representations, warranties, or conditions of any kind, express or implied, including, without limitation, implied warranties or conditions concerning this document's fitness for a particular purpose or use, its merchantability, or its non-infringement of any third party's intellectual property rights. ASME and CSA do not warrant the accuracy, completeness, or currency of any of the information published in this document. ASME and CSA make no representations or warranties regarding this document's compliance with any applicable statute, rule, or regulation.

IN NO EVENT SHALL ASME AND CSA, THEIR RESPECTIVE VOLUNTEERS, MEMBERS, SUBSIDIARIES, OR AFFILIATED COMPANIES, OR THEIR EMPLOYEES, DIRECTORS, OR OFFICERS, BE LIABLE FOR ANY DIRECT, INDIRECT, OR INCIDENTAL DAMAGES, INJURY, LOSS, COSTS, OR EXPENSES, HOWSOEVER CAUSED, INCLUDING BUT NOT LIMITED TO SPECIAL OR CONSEQUENTIAL DAMAGES, LOST REVENUE, BUSINESS INTERRUPTION, LOST OR DAMAGED DATA, OR ANY OTHER COMMERCIAL OR ECONOMIC LOSS, WHETHER BASED IN CONTRACT, TORT (INCLUDING NEGLIGENCE), OR ANY OTHER THEORY OF LIABILITY, ARISING OUT OF OR RESULTING FROM ACCESS TO OR POSSESSION OR USE OF THIS DOCUMENT, EVEN IF ASME OR CSA HAVE BEEN ADVISED OF THE POSSIBILITY OF SUCH DAMAGES, INJURY, LOSS, COSTS, OR EXPENSES.

In publishing and making this document available, ASME and CSA are not undertaking to render professional or other services for or on behalf of any person or entity or to perform any duty owed by any person or entity to another person or entity. The information in this document is directed to those who have the appropriate degree of experience to use and apply its contents, and ASME and CSA accept no responsibility whatsoever arising in any way from any and all use of or reliance on the information contained in this document.

ASME and CSA have no power, nor do they undertake, to enforce compliance with the contents of the standards or other documents they jointly publish.

Authorized use of this document

This document is being provided by ASME and CSA for informational and non-commercial use only. The user of this document is authorized to do only the following:

If this document is in electronic form:
- load this document onto a computer for the sole purpose of reviewing it;
- search and browse this document; and
- print this document.

Limited copies of this document in print or paper form may be distributed only to persons who are authorized by ASME and CSA to have such copies, and only if this Legal Notice appears on each such copy.

In addition, users may not and may not permit others to
- alter this document in any way or remove this Legal Notice from the attached standard;
- sell this document without authorization from ASME and CSA; or
- make an electronic copy of this document.

If you do not agree with any of the terms and conditions contained in this Legal Notice, you may not load or use this document or make any copies of the contents hereof, and if you do make such copies, you are required to destroy them immediately. Use of this document constitutes your acceptance of the terms and conditions of this Legal Notice.

The American Society of Mechanical Engineers®

CANADIAN STANDARDS ASSOCIATION

Copyright ASME International
Provided by IHS under license with ASME
No reproduction or networking permitted without license from IHS
Not for Resale

CSA Standards Update Service

ASME A112.18.1-2005/CSA B125.1-05
June 2005

Title: *Plumbing supply fittings*
Pagination: 65 pages (xv preliminary and 50 text), each dated **June 2005**

Automatic notifications about any updates to this publication are available.

- To register for e-mail notifications, and/or to download any existing updates in PDF, enter the Online Store at **www.ShopCSA.ca** and click on **My Account** on the navigation bar.

  The **List ID** for this document is **2015393**.

- To receive printed updates, please complete and return the attached card.

Name _____

Organization _____

Address _____

City _____

Province/State _____

Country _____ Postal/Zip Code _____

E-mail _____

I consent to CSA collecting and using the above information to send me updates relating to this publication.

Visit CSA's policy on privacy at www.csagroup.org/legal to find out how we protect your personal information.

ASME A112.18.1-2005/CSA B125.1-05

Copyright ASME International
Provided by IHS under license with ASME
No reproduction or networking permitted without license from IHS
Not for Resale

Affranchir
suffisamment

Place
Stamp Here

ASSOCIATION CANADIENNE DE NORMALISATION
BUREAU CENTRAL DE L'INFORMATION
5060, SPECTRUM WAY, BUREAU 100
MISSISSAUGA ON L4W 5N6
CANADA

CANADIAN STANDARDS ASSOCIATION
CONSOLIDATED MAILING LIST
5060 SPECTRUM WAY, SUITE 100
MISSISSAUGA ON L4W 5N6
CANADA

Copyright ASME International
Provided by IHS under license with ASME
No reproduction or networking permitted without license from IHS
Not for Resale

ASME/CSA Standard

ASME A112.18.1-2005
CSA B125.1-05
Plumbing supply fittings



The American Society of Mechanical Engineers



CANADIAN STANDARDS ASSOCIATION

®*Registered trade-mark of Canadian Standards Association*

Copyright ASME International
Provided by IHS under license with ASME
No reproduction or networking permitted without license from IHS

Not for Resale

Commitment for Amendments

This Standard is issued jointly by the American Society of Mechanical Engineers (ASME) and the Canadian Standards Association (CSA). Amendments to this Standard will be made only after processing according to the Standards writing procedures of both ASME and CSA.

The American Society of Mechanical Engineers (ASME)
Three Park Avenue
New York, NY 10016-5990
USA
www.asme.org

ISBN 0-7918-2982-0

© Copyright 2005

The 2005 edition of this Standard is being issued with an automatic addenda subscription service. The use of addenda allows revisions made in response to public review comments or committee actions to be published as necessary.

Published in June 2005 by Canadian Standards Association
A not-for-profit private sector organization
5060 Spectrum Way, Suite 100
Mississauga, Ontario, Canada
L4W 5N6
1-800-463-6727 • 416-747-4044
Visit the CSA Online Store at www.ShopCSA.ca

ISBN 1-55397-398-4
Technical Editor: Abraham I. Murra

© Canadian Standards Association — 2005

All rights reserved. No part of this publication may be reproduced in any form whatsoever without the prior permission of the publisher.

Copyright ASME International
Provided by IHS under license with ASME
No reproduction or networking permitted without license from IHS
Not for Resale

© American Society of Mechanical Engineers
© Canadian Standards Association

Contents

ASME Standards Committee A112 on Plumbing Materials and Equipment *vi*

ASME Project Team 18.1 — Plumbing Fixture Fittings *viii*

CSA Technical Committee on Plumbing Fittings *x*

ASME/CSA Joint Harmonization Task Group on Plumbing Fittings *xii*

Preface *xiii*

CSA Foreword *xv*

1 Scope *1*

2 Reference publications *2*
2.1 ASME and CSA publications *2*
2.2 Other publications *2*

3 Definitions and abbreviations *4*
3.1 Definitions *4*
3.2 Abbreviations *7*

4 Design requirements *8*
4.1 Supply fittings *8*
4.1.1 Rated pressure *8*
4.1.2 Rated temperatures *8*
4.1.3 Seating members *8*
4.2 Servicing *8*
4.3 Installation *8*
4.4 Threaded connections *9*
4.5 Connections other than threaded connections *9*
4.6 Accessible design *9*
4.7 Backflow prevention *9*
4.8 Cover plates and escutcheons *10*
4.9 Toxicity *10*
4.10 Frost-proof faucets and hydrants *10*
4.11 Shower heads, body sprays, and hand-held showers *10*
4.12 Cross-flow *10*
4.13 Fittings incorporating electrical features *10*
4.13.1 General *10*
4.13.2 Testing *11*
4.14 Materials *11*
4.15 Automatic compensating valve temperature control *11*
4.16 Lawn and sediment faucets *11*

5 Performance requirements and test methods *11*
5.1 General *11*
5.1.1 Preconditioning *11*
5.1.2 Installation for testing *11*
5.1.3 Applicable tests *11*
5.2 Coatings *11*
5.2.1 General *11*

Copyright ASME International
Provided by IHS under license with ASME
No reproduction or networking permitted without license from IHS
Not for Resale

© American Society of Mechanical Engineers
© Canadian Standards Association

5.2.2 Corrosion (all substrates and coatings) *12*
5.2.3 Adhesion *12*
5.2.4 Decorative organic coatings *13*
5.3 Pressure and temperature *14*
5.3.1 Static and dynamic seals *14*
5.3.2 Burst pressure *14*
5.3.3 Cross-flow check valves *15*
5.3.4 Hose assemblies *15*
5.3.5 Ball joints *15*
5.3.6 Diverters *15*
5.4 Flow rate *16*
5.4.1 Supply fittings *16*
5.4.2 Test procedure *16*
5.5 Operating requirements *16*
5.6 Life cycle *17*
5.6.1 Requirements *17*
5.6.2 Test method *18*
5.6.3 Fittings and other control devices *19*
5.6.4 Swing spouts *20*
5.6.5 Shower hoses, pullout spout hoses, and side spray hoses *20*
5.7 Resistance to installation loading *21*
5.7.1 Bending strength *21*
5.7.2 Thread torque strength *21*
5.8 Resistance to use loading *21*
5.8.1 Operating controls *21*
5.8.2 Maintenance of installed position *21*
5.8.3 Swing spout strength *22*
5.9 Backflow prevention *22*
5.9.1 General *22*
5.9.2 Fittings with plain outlets *22*
5.9.3 Fittings with a submersible outlet(s) *23*
5.9.4 Backflow prevention devices used in single-outlet fittings with a submersible outlet *23*
5.9.5 Back siphonage prevention in side spray diverters *25*
5.10 Automatic compensating valves *26*
5.10.1 General *26*
5.10.2 High-temperature conditioning test *26*
5.10.3 Pressure and burst pressure test *26*
5.10.4 Maximum torque and/or force adjustment *27*
5.10.5 Life cycle test *27*
5.10.6 Temperature control *28*
5.10.7 Supply line pressure loss *30*
5.10.8 Temperature and high limit control *30*

6 Markings *31*
6.1 General *31*
6.2 Temperature identification *31*
6.3 Packaging *31*
6.4 Instructions for automatic compensating valves *31*

Annexes
A (informative) — Unit conversion criteria *42*
B (normative) — Tests by fitting type *43*
C (informative) — Verifying the time constant of the temperature-measuring equipment *45*
D (informative) — Temperature variation for pressure- and thermostatic-compensating valves *47*

Copyright ASME International
Provided by IHS under license with ASME
No reproduction or networking permitted without license from IHS
Not for Resale

Tables

1 — Minimum and maximum flow rates *32*
2 — Operating requirements *33*
3 — Life cycle test *33*
4 — Thread torque strength *34*

Figures

1 — Deck-mounted lavatory and sink supply fittings *34*
2 — Dimensions for 1/2-14 NPSM shanks *35*
3 — Bending loads on supply fittings *36*
4 — Discharge capacity test schematics *37*
5 — Set-up for check valve leakage test *38*
6 — Set-up for back siphonage and hidden check valve test *39*
7 — Set-up for high-temperature conditioning, regulation and temperature variation, and cold water supply pressure loss tests *40*
8 — Set-up for life cycle test for automatic compensating valves *41*

Copyright ASME International
Provided by IHS under license with ASME
No reproduction or networking permitted without license from IHS
Not for Resale

© American Society of Mechanical Engineers
© Canadian Standards Association

ASME Standards Committee A112 on Plumbing Materials and Equipment

D.W. Viola	Plumbing Manufacturers Institute, Schaumburg, Illinois, USA	*Chair*
S. Remedios	Delta Faucet Company, Indianapolis, Indiana, USA	*Vice-Chair*
R.H. Ackroyd	Rand Engineering, Newburyport, Massachusetts, USA	
J.A. Ballanco	JB Engineering and Code Consulting, PC, Munster, Indiana, USA	
J. Bouwer	Saniflo, Guelph, Ontario	
M.N. Burgess	Burgess Group Inc., San Diego, California, USA	
S.L. Cavanaugh	Cavanaugh Consulting, Burbank, California, USA	
A. Ciechanowski	NSF International, Ann Arbor, Michigan, USA	
A. Cohen	Arthur Cohen & Associates, Albuquerque, New Mexico, USA	
P. DeMarco	American Standard Inc., Piscataway, New Jersey, USA	
G.S. Duren	Code Compliance Inc., Keystone Heights, Florida, USA	
A.R. Emmerson	Buffalo Grove, Illinois, USA	
L.S. Galowin	Bethesda, Maryland, USA	
R.I. Greenwald	Sunroc Corp., Dover, Delaware, USA	
E. Ho	IAPMO Research & Testing, Inc., Markham, Ontario	
D.E. Holloway	SGS U.S. Testing Company Inc., Tulsa, Oklahoma, USA	
M. Klimboff	Crane Plumbing/Fiat Products, Cincinnati, Ohio, USA	

Copyright ASME International
Provided by IHS under license with ASME
No reproduction or networking permitted without license from IHS
Not for Resale

M.T. Kobel	IAPMO, Ontario, California, USA	
N. Kummerlen	Moen Incorporated, North Olmsted, Ohio, USA	
J.W. Lauer	Sloan Valve Co., Franklin Park, Illinois, USA	
R.M. Martin	California Energy Commission, Sacramento, California, USA	
P.W. Meikle	PW Meikle & Associates Inc., Antioch, California, USA	
S. Rawalpindiwala	Kohler Co., Kohler, Wisconsin, USA	
G.L. Simmons	Charlotte Pipe and Foundry, Charlotte, North Carolina, USA	
L. Simnick	International Code Council, Country Club Hills, Illinois, USA	
W.M. Smith	Jay R. Smith Mfg. Co., Montgomery, Alabama, USA	
R.E. White	Richard E. White & Associates, South Bend, Indiana, USA	
W.C. Whitehead	Plumbing & Drainage Institute, North Andover, Massachusetts, USA	
C.J. Gomez	ASME International, New York, New York, USA	*Secretary*

Copyright ASME International
Provided by IHS under license with ASME
No reproduction or networking permitted without license from IHS
Not for Resale

© American Society of Mechanical Engineers
© Canadian Standards Association

ASME Project Team 18.1 — Plumbing Fixture Fittings

N. Covino	American Standard Inc., Piscataway, New Jersey, USA	*Chair*
A.R. Emmerson	Buffalo Grove, Illinois, USA	*Vice-Chair*
S. Rawalpindiwala	Kohler Co., Kohler, Wisconsin, USA	*Secretary*
L.K. Acker	ACT, Inc. Metlund Systems, Costa Mesa, California, USA	
R.H. Ackroyd	Rand Engineering, Newburyport, Massachusetts, USA	
M.J. Ament	Ament International Corp., Bethel Park, Pennsylvania, USA	
D. Berge	5D Infusion Canada Inc., Iberville, Québec	
S.L. Cavanaugh	Cavanaugh Consulting, Burbank, California, USA	
A. Ciechanowski	NSF International, Ann Arbor, Michigan, USA	
F. Fernandez	TOTO USA Inc., Orange, California, USA	
K. Fromme	Bradley Corp., Menomonee Falls, Wisconsin, USA	
C.R. Graham	Martech Enterprises, Thousand Oaks, California, USA	
E. Ho	IAPMO Research & Testing, Inc., Markham, Ontario	
D.E. Holloway	SGS U.S. Testing Company Inc., Tulsa, Oklahoma, USA	
R.M. Hutslar	Laing Thermotech, Inc., San Diego, California, USA	
M. Joedicke	Grohe Water Technology AG & Co., Menden, Germany	
M. Klimboff	Crane Plumbing/Fiat Products, Cincinnati, Ohio, USA	

Copyright ASME International
Provided by IHS under license with ASME
No reproduction or networking permitted without license from IHS
Not for Resale

M.T. Kobel	IAPMO, Ontario, California, USA
N. Kummerlen	Moen Incorporated, North Olmsted, Ohio, USA
J.W. Lauer	Sloan Valve Co., Franklin Park, Illinois, USA
F.L. Luedke	Neoperl Inc., Waterbury, Connecticut, USA
A. Lunt	Spears Manufacturing, Sylmar, California, USA
R.M. Martin	California Energy Commission, Sacramento, California, USA
P.W. Meikle	PW Meikle & Associates Inc., Antioch, California, USA
L.A. Mercer	Moen Incorporated, North Olmstead, Ohio, USA
S. Remedios	Delta Faucet Company, Indianapolis, Indiana, USA
A. Robles	Fluidmaster Inc., San Juan Capistrano, California, USA
P. Saeed	Powers (a division of Watts Water Technologies, Inc.), Des Plaines, Illinois, USA
R.J. Sallick	Waterworks, Danbury, Connecticut, USA
D.W. Viola	Plumbing Manufacturers Institute, Schaumburg, Illinois, USA
E.T. Wangsgaard	Testing Engineers International, Salt Lake City, Utah, USA
K. Wijaya	IAPMO Testing and Services, LLC, Ontario, California, USA

Copyright ASME International
Provided by IHS under license with ASME
No reproduction or networking permitted without license from IHS
Not for Resale

© American Society of Mechanical Engineers
© Canadian Standards Association

CSA Technical Committee on Plumbing Fittings

A. Knapp	A. Knapp & Associates, Toronto, Ontario	*Chair*
B. Lagueux	Régie du bâtiment du Québec, Québec, Québec	*Vice-Chair*
W. Ball	Woodford Manufacturing Company, Colorado Springs, Colorado, USA	*Associate*
M. Birks	The Birks Company, Moffat, Ontario	
S. Breda	Breda & Associates Ltd., Downsview, Ontario	
C. Caruana	CSA, Toronto, Ontario	*Associate*
S.L. Cavanaugh	Cavanaugh Consulting, Burbank, California, USA	
I. Chang	Intertek ETL SEMKO, Coquitlam, British Columbia	*Associate*
A. Ciechanowski	NSF International, Ann Arbor, Michigan, USA	*Associate*
M. Dennis	Moen Incorporated, Oakville, Ontario	
B. Diggens	MJS Mechanical Ltd., Calgary, Alberta	
A.R. Emmerson	Buffalo Grove, Illinois, USA	
K. Ernst	Oakville Stamping & Bending Limited, Oakville, Ontario	
W. Falcomer	City of Nepean, Nepean, Ontario	
W. Granger	Delta Faucet Canada, London, Ontario	
J. Gunn	Roches Point, Ontario *Consumer Representative*	
E. Ho	IAPMO Research & Testing, Inc., Markham, Ontario	*Associate*

--`,,```,,,,````-`-`,,`,,`,`,,`---

Copyright ASME International
Provided by IHS under license with ASME
No reproduction or networking permitted without license from IHS
Not for Resale

K.S. Hui	Ontario Ministry of Municipal Affairs and Housing, Toronto, Ontario	
N. Kummerlen	Moen Incorporated, North Olmsted, Ohio, USA	*Associate*
F. Lemieux	Health Canada, Ottawa, Ontario	
P.W. Meikle	PW Meikle & Associates Inc., Antioch, California, USA	*Associate*
L.A. Mercer	Moen Incorporated, North Olmsted, Ohio, USA	*Associate*
D. Myers	New Brunswick Community College, Saint John, New Brunswick	
P. Paré	Watts Industries (Canada) Inc., Burlington, Ontario	*Associate*
F. Pieters	Bélanger UPT, Dorval, Québec	
S. Rawalpindiwala	Kohler Co., Kohler, Wisconsin, USA	
S. Remedios	Delta Faucet Company, Indianapolis, Indiana, USA	*Associate*
P. Saeed	Powers (a division of Watts Water Technologies, Inc.), Des Plaines, Illinois, USA	
S. Sylvain	Ville de Montréal, Montréal, Québec	
D.W. Viola	Plumbing Manufacturers Institute, Schaumburg, Illinois, USA	*Associate*
G. West	Winnipeg, Manitoba *Consumer Representative*	
C. Wrigley-Thomas	Canadian Institute of Plumbing and Heating, Toronto, Ontario	*Associate*
A.I. Murra	CSA, Mississauga, Ontario	*Project Manager*

Copyright ASME International
Provided by IHS under license with ASME
No reproduction or networking permitted without license from IHS
Not for Resale

© American Society of Mechanical Engineers
© Canadian Standards Association

ASME/CSA Joint Harmonization Task Group on Plumbing Fittings

P. Paré	Watts Industries (Canada) Inc., Burlington, Ontario	*Co-Chair*
S. Remedios	Delta Faucet Company, Indianapolis, Indiana, USA	*Co-Chair*
C. Caruana	CSA, Toronto, Ontario	
I. Chang	Intertek ETL SEMKO, Coquitlam, British Columbia	
A.R. Emmerson	Buffalo Grove, Illinois, USA	
K. Ernst	Oakville Stamping & Bending Limited, Oakville, Ontario	
C.J. Gomez	ASME International, New York, New York, USA	
W. Granger	Delta Faucet Canada, London, Ontario	
J. Gunn	Roches Point, Ontario *Consumer Representative*	
E. Ho	IAPMO Research & Testing, Inc., Markham, Ontario	
A. Knapp	A. Knapp & Associates, Toronto, Ontario	
N. Kummerlen	Moen Incorporated, North Olmsted, Ohio, USA	
F. Lemieux	Health Canada, Ottawa, Ontario	
S. Rawalpindiwala	Kohler Co., Kohler, Wisconsin, USA	
P. Saeed	Powers (a division of Watts Water Technologies, Inc.), Des Plaines, Illinois, USA	
D.W. Viola	Plumbing Manufacturers Institute, Schaumburg, Illinois, USA	
A.I. Murra	CSA, Mississauga, Ontario	*Project Manager*

In Memoriam

This Standard is dedicated to the memory of Patrick J. Higgins, whose vision and commitment to standards activities in both Canada and the United States were an inspiration in the development of this harmonized Standard.

Copyright ASME International
Provided by IHS under license with ASME
No reproduction or networking permitted without license from IHS
Not for Resale

© American Society of Mechanical Engineers
© Canadian Standards Association

Preface

This is the first edition of ASME A112.18.1/CSA B125.1, *Plumbing supply fittings.*

This joint Standard was developed in response to an industry request for a Standard for testing plumbing supply fittings that would be acceptable in both Canada and the United States. Its coverage is restricted to devices located between the supply line stop and the terminal fitting. Plumbing waste fittings are covered by ASME A112.18.2/CSA B125.2, *Plumbing waste fittings.* Devices not covered by this Standard or by ASME A112.18.2/CSA B125.2, e.g., temperature-actuated in-line mixing valves and flexible connectors under continuous pressure, are covered by CSA B125.3, *Plumbing fittings.* The technical content of Clause 5.10 of this Standard was developed jointly by the American Association of Sanitary Engineering (ASSE) and CSA.

This Standard replaces ASME A112.18.1-2003, *Plumbing Fixture Fittings,* and, together with ASME A112.18.2/CSA B125.2 and CSA B125.3, replaces CAN/CSA-B125-01, *Plumbing Fittings*.

The concept of harmonization for plumbing fittings arose in the early 1990s, when a free trade agreement between Canada, Mexico, and the United States began to be discussed. Standards development organizations (SDOs) were at the forefront of these discussions and an opportunity soon arose for those SDOs involved in setting requirements for plumbing products to establish a process for harmonization. However, the effort to develop a trinational Standard stalled until 2001, when ASME and CSA decided to develop a binational Standard for plumbing fixture fittings. Harmonization activities were undertaken by a Joint Harmonization Task Group (JHTG), in which the ASME and CSA plumbing fitting committees were equally represented. The responsibility for procedural matters and final approval of technical content was assumed by committees and teams at higher levels within each SDO. Initially, the JHTG's philosophy was to draft a Standard reflecting existing requirements in the applicable ASME and CSA Standards. This seemed a reasonable task, given that ASME and CSA had already been trying for many years to harmonize the requirements in their plumbing fitting Standards in response to constant requests for revision. There were only a few tests in the applicable ASME Standard that did not appear in its CSA counterpart, and vice versa (corrosion, swing spout strength, and intermittent shock, to name three). However, once the JHTG began to meet, its members realized that there was room for improvement in how both Standards dealt with current products and technologies. It was therefore agreed that the new Standard would not only harmonize the requirements of both existing Standards but also improve on them. Accordingly, the life cycle, thermal cycling, and corrosion tests have all been revised for this Standard to provide the requirements necessary to ensure the continued health and safety of users of plumbing supply fittings. The design requirements of this Standard, however, are generally similar to those of the Standards it replaces, which is understandable considering that plumbing supply fittings perform basically the same functions now that they did when the Standards being replaced were first developed.

This Standard was prepared by the ASME/CSA Joint Harmonization Task Group on Plumbing Fittings, under the jurisdiction of ASME Standards Committee A112 on Plumbing Materials and Equipment and the CSA Technical Committee on Plumbing Fittings. The CSA Technical Committee operates under the jurisdiction of the CSA Strategic Steering Committee on Plumbing Products and Materials. This Standard has been formally approved by ASME Standards Committee A112 and the CSA Technical Committee. ASME A112.18.1-2005 was approved as an American National Standard by the American National Standards Institute on May 24, 2005. CSA B125.1 will be submitted to the Standards Council of Canada for approval as a National Standard of Canada.

June 2005

ASME Notes:

(1) *This standard was developed under procedures accredited as meeting the criteria for American National Standards and it is an American National Standard. The Standards Committee that approved the code or standard was balanced to assure that individuals from competent and concerned interests have had an opportunity to participate. The proposed Standard was made available for public review and comment that provides an opportunity for additional public input from industry, academia, regulatory agencies, and the public-at-large.*

Copyright ASME International
Provided by IHS under license with ASME
No reproduction or networking permitted without license from IHS
Not for Resale

(2) *ASME does not "approve," "rate," or "endorse" any item, construction, proprietary device, or activity.*

(3) *ASME does not take any position with respect to the validity of any patent rights asserted in connection with any items mentioned in this document, and does not undertake to insure anyone utilizing a standard against liability for infringement of any applicable letters patent, nor assume any such liability. Users of a standard are expressly advised that determination of the validity of any such patent rights, and the risk of infringement of such rights, is entirely their own responsibility.*

(4) *Participation by federal agency representative(s) or person(s) affiliated with industry is not to be interpreted as government or industry endorsement of this standard.*

(5) *ASME accepts responsibility for only those interpretations of this document issued in accordance with the established ASME procedures and policies, which precludes the issuance of interpretations by individuals.*

(6) *ASME issues written replies to inquiries concerning interpretation of technical aspects of this Standard. All inquiries regarding this Standard, including requests for interpretations, should be addressed to:*
Secretary, A112 Standards Committee
The American Society of Mechanical Engineers
Three Park Avenue
New York, NY 10016-5990

A request for interpretation should be clear and unambiguous. The request should

- *cite the applicable edition of the Standard for which the interpretation is being requested.*
- *phrase the question as a request for an interpretation of a specific requirement suitable for general understanding and use, not as a request for an approval of a proprietary design or situation. The inquirer may also include any plans or drawings, which are necessary to explain the question; however, they should not contain proprietary names or information.*

ASME procedures provide for reconsideration of any interpretation when or if additional information that might affect an interpretation is available. Further, persons aggrieved by an interpretation may appeal to the cognizant ASME Committee.

Interpretations are published on the ASME Web site under the Committee Pages at http://www.asme.org/codes/ as they are issued.

CSA Notes:

(1) *Use of the singular does not exclude the plural (and vice versa) when the sense allows.*

(2) *Although the intended primary application of this Standard is stated in its Scope, it is important to note that it remains the responsibility of the users of the Standard to judge its suitability for their particular purpose.*

(3) *This publication was developed by consensus, which is defined by* CSA Policy governing standardization — Code of good practice for standardization *as "substantial agreement. Consensus implies much more than a simple majority, but not necessarily unanimity". It is consistent with this definition that a member may be included in the Technical Committee list and yet not be in full agreement with all clauses of this publication.*

(4) *CSA Standards are subject to periodic review, and suggestions for their improvement will be referred to the appropriate committee.*

(5) *All enquiries regarding this Standard, including requests for interpretation, should be addressed to Canadian Standards Association, 5060 Spectrum Way, Suite 100, Mississauga, Ontario, Canada L4W 5N6.*

Requests for interpretation should

(a) define the problem, making reference to the specific clause, and, where appropriate, include an illustrative sketch;
(b) provide an explanation of circumstances surrounding the actual field condition; and
(c) be phrased where possible to permit a specific "yes" or "no" answer.

Committee interpretations are processed in accordance with the CSA Directives and guidelines governing standardization *and are published in CSA's periodical* Info Update*, which is available on the CSA Web site at www.csa.ca.*

Copyright ASME International
Provided by IHS under license with ASME
No reproduction or networking permitted without license from IHS Not for Resale

© American Society of Mechanical Engineers
© Canadian Standards Association

CSA Foreword

The Canadian Standards Association (CSA) develops standards under the name Canadian Standards Association, and provides certification and testing under the name CSA International. CSA International provides certification services for manufacturers who, under license from CSA, wish to use the appropriate registered CSA Marks on certain products of their manufacture to indicate conformity with CSA Standards.

CSA Certification for a number of products is provided in the interest of maintaining agreed-upon standards of quality, performance, interchangeability and/or safety, as appropriate. Where applicable, certification may form the basis for acceptance by inspection authorities responsible for enforcement of regulations. Where feasible, programs will be developed for additional products for which certification is desired by producers, consumers, or other interests. In performing its functions in accordance with its objectives, CSA does not assume or undertake to discharge any responsibility of the manufacturer or any other party. The opinions and findings of the Association represent its professional judgment given with due consideration to the necessary limitations of practical operation and state of the art at the time the Standard is processed.

Products in substantial accord with this Standard but which exhibit a minor difference or a new feature may be deemed to meet the Standard providing the feature or difference is found acceptable utilizing appropriate CSA International Operating Procedures. Products that comply with this Standard shall not be certified if they are found to have additional features which are inconsistent with the intent of this Standard. Products shall not be certifiable if they are discovered to contravene applicable laws or regulations.

Testing techniques, test procedures, and instrumentation frequently must be prescribed by CSA International in addition to the technical requirements contained in Standards of CSA. In addition to markings specified in the Standard, CSA International may require special cautions, markings, and instructions that are not specified by the Standard.

Some tests required by CSA Standards may be inherently hazardous. The Association neither assumes nor accepts any responsibility for any injury or damage that may occur during or as the result of tests, wherever performed, whether performed in whole or in part by the manufacturer or the Association, and whether or not any equipment, facility, or personnel for or in connection with the test is furnished by the manufacturer or the Association.

Manufacturers should note that, in the event of the failure of CSA International to resolve an issue arising from the interpretation of requirements, there is an appeal procedure: the complainant should submit the matter, in writing, to the Secretary of the Canadian Standards Association.

If this Standard is to be used in obtaining CSA Certification please remember, when making application for certification, to request all current Amendments, Bulletins, Notices, and Technical Information Letters that may be applicable and for which there may be a nominal charge. For such information or for further information concerning CSA Certification, please address your inquiry to Applications and Customer Service, CSA International, 178 Rexdale Boulevard, Toronto, Ontario, Canada M9W 1R3.

Copyright ASME International
Provided by IHS under license with ASME
No reproduction or networking permitted without license from IHS
Not for Resale

Copyright ASME International
Provided by IHS under license with ASME
No reproduction or networking permitted without license from IHS
Not for Resale

© American Society of Mechanical Engineers
© Canadian Standards Association

ASME A112.18.1-2005/CSA B125.1-05
Plumbing supply fittings

1 Scope

1.1
This Standard applies to plumbing supply fittings and accessories located between the supply line stop and the terminal fitting, inclusive, as follows:
(a) automatic compensating valves for individual wall-mounted showering systems;
(b) bath and shower supply fittings;
(c) bidet supply fittings;
(d) clothes washer supply fittings;
(e) drinking fountain supply fittings;
(f) humidifier supply stops;
(g) kitchen, sink, and lavatory supply fittings;
(h) laundry tub supply fittings;
(i) lawn and sediment faucets;
(j) metering and self-closing supply fittings; and
(k) supply stops.

1.2
Plumbing waste fittings are covered by ASME A112.18.2/CSA B125.2.

1.3
Other devices, e.g., temperature-actuated in-line mixing valves and flexible connectors under continuous pressure, are covered by CSA B125.3 or other plumbing product Standards.

1.4
This Standard does not apply to pipes and tubes or pipe and tube fittings.

1.5
In this Standard, “shall” is used to express a requirement, i.e., a provision that the user is obliged to satisfy in order to comply with the standard; “should” is used to express a recommendation or that which is advised but not required; and “may” is used to express an option or that which is permissible within the limits of the standard. Notes accompanying clauses do not include requirements or alternative requirements; the purpose of a note accompanying a clause is to separate from the text explanatory or informative material. Notes to tables and figures are considered part of the table or figure and may be written as requirements.

1.6
The values stated in either SI (metric) or yard/pound units are to be regarded as the standard. SI units are the units of record in Canada.

In this Standard, the yard/pound units are shown in parentheses. The values stated in each measurement system are equivalent in application; however, each system is to be used independently. Combining values from the two measurement systems can result in non-conformance with this Standard.

All references to gallons are to US gallons.

For information on the conversion criteria used in this Standard, see Annex A.

Copyright ASME International
Provided by IHS under license with ASME
No reproduction or networking permitted without license from IHS
Not for Resale

© American Society of Mechanical Engineers
© Canadian Standards Association

2 Reference publications

2.1 ASME and CSA publications

This Standard refers to the following publications, and where such reference is made, it shall be to the edition listed below, including all amendments published thereto.

ASME International (American Society of Mechanical Engineers)

A112.1.2-1991 (R2002)
Air Gaps in Plumbing Systems

A112.18.2-2005/CSA B125.2-05
Plumbing Waste Fittings

A112.18.3-2002
Performance Requirements for Backflow Devices and Systems in Plumbing Fixture Fittings

B1.20.1-1983 (R2001)
Pipe Threads, General Purpose, Inch

B1.20.7-1991 (R2003)
Hose Coupling Screw Threads, Inch

B16.18-2001
Cast Copper Alloy Solder Joint Pressure Fittings

B16.22-2001
Wrought Copper and Copper Alloy Solder Joint Pressure Fittings

B16.26-1988
Cast Copper Alloy Fittings for Flared Copper Tubes

PTC 19.2-1987 (R1998)
Pressure Measurements, Instruments and Apparatus

PTC 19.5-1972
Application Part II of Fluid Meters: Interim Supplement to Ptc 19.5 on Instruments and Apparatus

CSA (Canadian Standards Association)

ASME A112.18.2-2005/CSA B125.2-05
Plumbing waste fittings

CAN/CSA-B64 Series-01
Backflow preventers and vacuum breakers

B125.3-05
Plumbing fittings

CAN/CSA-C22.2 No. 223-M91 (R1999)
Power supplies with extra-low-voltage Class 2 outputs

2.2 Other publications

This Standard refers to the following publications, and where such reference is made, it shall be to the edition listed below, including all amendments published thereto.

Copyright ASME International
Provided by IHS under license with ASME
No reproduction or networking permitted without license from IHS
Not for Resale

ASSE (American Society of Sanitary Engineering)
1016-2005
Automatic Compensating Valves for Individual Showers and Tub/Shower Combinations

1019-1997
Performance Requirements for Vacuum Breaker Wall Hydrants, Freeze Resistant, Automatic Draining Type

ASTM International (American Society for Testing and Materials)
B 117-03
Standard Practice for Operating Salt Spray (Fog) Apparatus

B 368-97 (2003) e1
Standard Method for Copper-Accelerated Acetic Acid-Salt Spray (Fog) Testing (CASS Test)

B 380-97 (2002)
Standard Test Method of Corrosion Testing of Decorative Electrodeposited Coatings by the Corrodkote Procedure

B 571-97 (2003)
Standard Practice for Qualitative Adhesion Testing of Metallic Coatings

D 968-93 (2001)
Standard Test Methods for Abrasion Resistance of Organic Coatings by Falling Abrasive

D 3359-02
Standard Test Methods for Measuring Adhesion by Tape Test

D 4060-01
Standard Test Method for Abrasion Resistance of Organic Coatings by the Taber Abraser

G 85-02e1
Standard Practice for Modified Salt Spray (Fog) Testing

ISA (Instrumentation, Systems, and Automation Society)
ANSI/ISA-75.02-1996
Control Valve Capacity Test Procedures

MC96.1-1982
Temperature Measurement Thermocouples

ISO (International Organization for Standardization)
228-1:2000
Pipe threads where pressure-tight joints are not made on the threads — Part I: Dimensions, tolerances and designation

NSF International
NSF/ANSI 61-2003e
Drinking Water System Components — Health Effects

SAE International (Society of Automotive Engineers)
J512 (April 1997)
Automotive Tube Fittings

UL (Underwriters Laboratories Inc.)
1310 (1994)
Standard for Class 2 Power Units

Copyright ASME International
Provided by IHS under license with ASME
No reproduction or networking permitted without license from IHS
Not for Resale

1585 (1998)
Standard for Class 2 and Class 3 Transformers

3 Definitions and abbreviations

3.1 Definitions

The following definitions apply in this Standard:

Accessible — readily serviceable or readily replaceable.

Accessible design — a design approach for making devices accessible to persons with physical, sensory, or cognitive disabilities.
Note: *Accessible designs were formerly called barrier-free designs.*

Accessory — a component that can, at the discretion of the user, be readily added, removed, or replaced, and that, when removed, will not prevent the fitting from fulfilling its primary function.
Note: *Examples include aerators, hand-held shower assemblies, shower heads, and in-line flow controls.*

Air gap — the unobstructed vertical distance, through air, between the lowest point of a water supply outlet and the mounting deck of the fitting.

Automatic compensating valve — a device that is supplied with hot and cold water and provides a means of automatically maintaining the water temperature selected for an outlet.
Note: *Automatic compensating valves are used to reduce the risk of scalding and thermal shock.*

> **Combination pressure-balancing and thermostatic compensating valve** — a water-mixing valve that senses inlet supply hot and cold water pressures before mixing, senses the water temperature at the outlet, and compensates for pressure and thermal variations to maintain the water temperature at the outlet.
>
> **Pressure-balancing compensating valve** — a water-mixing valve that senses inlet supply hot and cold water pressures and compensates for variations in the inlet supply pressures to maintain the water temperature at the outlet.
>
> **Thermostatic compensating valve** — a water-mixing valve that senses the water temperature at the outlet and compensates for thermal variations to maintain the water temperature at the outlet.

Backflow — a flowing back or reversal of the normal direction of flow.
Note: *Back siphonage and back pressure are types of backflow.*

Backflow prevention device — any mechanical device, whether used singly or in combination with other controls, designed to automatically prevent an unintentional reversal of water flow in a potable water system due to back pressure or back siphonage.

Back pressure — pressure higher at the downstream or outlet end of a water distribution system than at a point upstream.

Back siphonage — backflow caused by below-atmospheric pressure in the supply system.

Blister — a dome-shaped defect resulting from loss of adhesion between layers or between one or more layers and the substrate.

Body spray — a shower device for spraying water onto a bather other than from the overhead position.
Note: *An example is a device mounted on a wall below the bather's head that sprays water in an approximately horizontal direction and can be fixed or allowed to swivel on a ball joint.*

Copyright ASME International
Provided by IHS under license with ASME
No reproduction or networking permitted without license from IHS
Not for Resale

© American Society of Mechanical Engineers
© Canadian Standards Association

Crack (as applied in coatings evaluation) —
(a) a separation in a coating layer that extends down to the next layer or to the substrate in a coating that has lost its adhesion; or
(b) any indication of a crack, such as white deposits or corrosion, that results from performance tests, allows penetration through a plating layer, and did not appear on the surface or part before performance testing.

Note: *Coating surface deformations that appear after performance testing (e.g., stretch marks, flow lines under the coating, or deformations caused by stress relieving of the substrate) and do not separate, peel, or come loose are not considered cracks.*

Critical level — the lowest water level in a fitting at which back siphonage will not occur.

Cross-flow — the exchange of water from one supply to the other without water flowing through the mixing valve outlet(s).

Diverter — a device that is integral to a fitting or functions as an accessory and is used to direct the flow of water from a primary outlet to one or more secondary outlets.

Drinking water — potable water intended for human ingestion.

Faucet — a terminal fitting.

Lawn faucet — a faucet designed to be installed horizontally on the outside wall of a building with male or female IPS threads or copper solder connections on the inlet and hose threads on the outlet. The outlet is usually angled 45° from the horizontal. The faucet includes a flange that mounts flush with the wall.
Note: *These faucets can be non-freeze faucets.*

Metering faucet — a faucet that after actuation dispenses water of a predetermined volume or for a predetermined period of time.
Note: *The volume or cycle duration can be fixed or adjustable.*

Sediment faucet — a horizontal faucet with male or female IPS threads on the inlet side and male hose threads at the outlet spout. The outlet can be angled approximately perpendicularly to the inlet or angled outward.
Note: *These valves were formerly called boiler drains because they were originally designed to drain water from boilers and release any accumulated sediment. Today they are also used in laundry rooms as hook-ups for washing machines.*

Self-closing faucet — a faucet that is designed to close itself as soon as the activating mechanism is released.

Fitting — a device designed to control and guide the flow of water.

Combination fitting — a fitting with more than one supply inlet delivering water through a single spout.

Concealed fitting — a fitting with its body mounted beneath or behind a fixture, wall, or surface.

Deck-mounted fitting — a fitting that is mounted on top of a horizontal surface.

Exposed fitting — a fitting whose body is mounted above or in front of a fixture's deck or shelf.

Supply fitting — a fitting designed to control and guide the flow of potable water in a supply system.

Terminal fitting — a fitting for use with an open or atmospheric discharge.

Copyright ASME International
Provided by IHS under license with ASME
No reproduction or networking permitted without license from IHS
Not for Resale

Fixture — a device for receiving water, waste matter, or both and directing these substances into a sanitary drainage system.

Flowing pressure — the pressure in the fitting supply piping upstream of an open fitting or accessory.

Hose assembly — an assembly consisting of a hose and end connections not subjected to continuous pressure.

Non-potable water — contaminated water not suitable for human or animal consumption, or water in a receptor.

Permanent mark or **label** — a mark or label that is intended to remain in place for the lifetime of the fitting under conditions of normal use.

Physical vapour deposition (PVD) — a family of coating processes in which the surface layer is formed by the deposition of individual atoms or molecules.
Note: *In PVD a material is vaporized from a solid or liquid source, transported through a low-pressure gaseous or plasma environment, and condensed on a substrate surface.*

Pit — a small depression or cavity.

Potable water — water that is satisfactory for drinking and for culinary and domestic purposes and meets the requirements of the health authority having jurisdiction.

Pressure envelope — the outside part of a supply fitting that withstands and contains the water pressure.

Primary outlet — the outlet from a supply fitting on the discharge side of a valve through which water will discharge unless diverted to a secondary outlet.

Public lavatory fittings — fixture fittings designed to be installed in non-residential bathrooms that are exposed to walk-in traffic.

Rigid waterway — any cross-section of a waterway that can transmit a bending load to the body of a fitting.

Seal — a component or other portion of a fitting that prevents water leakage.

Seat disk — a disk or washer that provides a watertight joint when compressed against the seat.

Secondary outlet — any outlet from a supply fitting on the discharge side of a valve, other than the primary outlet, through which water can be discharged.

Service conditions 1 (SC-1) — the coated significant surfaces of concealed fittings and concealed parts of exposed fittings.

Service conditions 2 (SC-2) — the coated significant surfaces of exposed fittings and exposed parts of concealed fittings.

Shank — the rigid threaded portion of a supply fitting that extends below the mounting surface and has a means for connecting to the supply line.

Significant defect — a fault that can be hazardous or adversely affect function.

Copyright ASME International
Provided by IHS under license with ASME
No reproduction or networking permitted without license from IHS
Not for Resale

Significant surface — an exposed surface that, if blemished, spoils the appearance or affects the performance of a fitting.

Standard tools — tools that are normally carried by plumbers for installing and maintaining plumbing (e.g., screwdrivers, key wrenches, flat-jawed wrenches, and pliers).

Substrate — the base material and all of the layers of coating under the final coating.

Supply pressure — the static water pressure in the fitting supply piping.

Supply stop — a valve that is placed immediately ahead of a terminal fitting to shut off the water supply to the terminal fitting so that it can be serviced or replaced.

Surface defect — any pit, blister, crack, peeling, wrinkling, corrosion, or exposure of the substrate visible to the unaided eye at normal reading distance.
Note: *"Unaided eye" includes vision assisted by correctional lenses normally worn by the person inspecting a device for surface defects.*

Thermal shock — a rapid change in the water temperature that is felt by the user and is sufficient to produce a potentially hazardous reaction.

User — an individual who can adjust the outlet water temperature at the point of use while he or she is in contact with the outlet water.

Valve — a fitting with a movable part that opens or obstructs one or more passages and thereby allows a flow to be started, stopped, and regulated.

Mixing valve, cycling type — a supply fitting with a single handle that can rotate from the closed position, through cold to hot, and in the reverse direction back to the closed position.

Mixing valve, single-control — a supply fitting with a single handle that turns water on and off and changes water volume and temperature.

Mixing valve, single-handle — a supply fitting with a single handle for changing the discharge water temperature when the fitting is supplied with both hot and cold water.

Mixing valve, two-handle — a supply fitting with separate hot and cold water control valves.

3.2 Abbreviations

The following abbreviations apply in this Standard:

CL — critical level
IPS — Iron Pipe Size
NPS — Nominal Pipe Size
NPSM — National Pipe Straight Mechanical
NPT — National Pipe Tapered
PVD — physical vapour deposition
SC-1 — service conditions 1
SC-2 — service conditions 2

Copyright ASME International
Provided by IHS under license with ASME
No reproduction or networking permitted without license from IHS
Not for Resale

© American Society of Mechanical Engineers
© Canadian Standards Association

4 Design requirements

4.1 Supply fittings

4.1.1 Rated pressure

4.1.1.1
Supply fittings shall be designed for a rated supply pressure of 690 kPa (100 psi).

4.1.1.2
Supply fittings shall be designed to function at any supply pressure between 140 and 860 kPa (20 and 125 psi).

4.1.2 Rated temperatures
Supply fittings shall be designed for rated supply temperatures from 5 to 71 °C (40 to 160°F).

4.1.3 Seating members

4.1.3.1
The following fittings shall have replaceable seats:
(a) supply valves for bath and shower fittings, except concealed stops;
(b) combination lavatory fittings;
(c) combination kitchen sink fittings;
(d) bidet fittings;
(e) single lavatory faucets; and
(f) exposed valve-type bath and shower fittings.

4.1.3.2
A seat disc arrangement shall be replaceable.

4.1.3.3
A seat disc arrangement shall not vibrate in service. When a threaded device is used to secure the disc, it shall remain secure after the disc has been removed and replaced five times.

4.2 Servicing
All fittings shall be designed so that replacement of wearing parts can be accomplished
(a) without removing the fitting from the supply system;
(b) without removing the piping from the body;
(c) without disturbing the finished wall; and
(d) using standard tools or manufacturer-provided tools.

Swing spouts designed to use adjustable packing in the joint between the spout and the body shall be constructed so that the adjustments can be made without removing the spout.

4.3 Installation
A method of sealing between the fitting and the fixture to which it is fastened shall be provided.

Copyright ASME International
Provided by IHS under license with ASME
No reproduction or networking permitted without license from IHS Not for Resale

4.4 Threaded connections

4.4.1

Threads shall comply with the following Standards:

(a) pipe threads shall comply with ASME B1.20.1;
(b) hose threads shall comply with ASME B1.20.7;
(c) aerators shall have 27 threads per inch, or an ISO Standard M22, M24, or M28 designation;
(d) hand-held shower connection threads shall be 1/2-14 NPSM or ISO 228–G 1/2 B (see ISO 228-1);
(e) the dimensions of supply flare connections shall be as specified in ASME B16.26; and
(f) the dimensions of supply compression connections shall be compatible with the requirements of SAE J512.

4.4.2

The dimensions for the inlets and shank lengths of 1/2-14 NPSM rigid shanks of deck-mounted lavatory and sink supply fittings designed to mate with a standard 1/2 NPSM coupling nut and tailpiece or 1/2 nominal size copper water tube shall be as shown in Figures 1 and 2.

Inlets and shanks may be designed to mate with other common connections.

Note: *Longer shank lengths are sometimes necessary on account of fitting orientations and countertop thickness or materials.*

4.4.3

Alternative end threaded connections for flexible hoses and flexible components shall meet the performance requirements of this Standard.

4.4.4

Shower heads for installation on standard shower arms shall be capable of being connected to a 1/2 NPT male thread.

4.5 Connections other than threaded connections

The lengths and diameters of solder-joint sockets shall be as specified in ASME B16.18 or B16.22 for connections to copper tubes. However, this requirement shall not apply to factory-assembled parts.

Alternative end connections for flexible hoses and flexible components shall meet the performance requirements of this Standard.

4.6 Accessible design

Operating controls intended for use in accessible designs shall

(a) be automatically controlled; or
(b) meet the following requirements:
    (i) it shall be operable with one hand;
    (ii) it shall not require tight grasping, pinching, or twisting of the wrist; and
    (iii) it shall require an operating force not greater than that specified in Table 2.

4.7 Backflow prevention

Fittings shall be designed to protect the potable water supply from backflow contamination by a means that meets the applicable requirements of Clause 5.9.

Diverting and anti-siphoning devices shall be incorporated into fittings in a way that permits removal for cleaning, repair, or replacement.

Copyright ASME International
Provided by IHS under license with ASME
No reproduction or networking permitted without license from IHS
Not for Resale

© American Society of Mechanical Engineers
© Canadian Standards Association

4.8 Cover plates and escutcheons

4.8.1
The cover plates of deck-mounted lavatory and sink supply fittings shall have the dimensions indicated in Figure 1, except as specified in Clause 4.8.2.

4.8.2
Escutcheons for concealed and deck-mounted supply fittings shall be capable of concealing a circular area with a diameter of not less than 44 mm (1.73 in).

4.9 Toxicity

4.9.1
Fittings covered by Section 9 of NSF/ANSI 61 shall comply with that Standard.

4.9.2
Solders and fluxes containing lead in excess of 0.2% by mass shall not be used where they will be in contact with potable water. Metal alloys in contact with potable water shall not exceed 8% lead content.

4.10 Frost-proof faucets and hydrants
Frost-proof faucets and hydrants shall meet the performance requirements of this Standard. Devices with integral backflow protection shall meet the requirements of CAN/CSA-B64 Series or ASSE 1019.

4.11 Shower heads, body sprays, and hand-held showers
When used as a component part of a shower head, body spray, or hand-held shower assembly, the flow-restricting inserts shall be mechanically retained at the point of manufacture. For the purpose of this requirement, the term "mechanically retained" shall mean that a force of 36 N (8.0 lbf) or more is required to remove the flow-restricting insert. This requirement shall not apply to shower heads that would cause water to leak significantly from areas other than the spray face if the flow-restricting insert were removed.

4.12 Cross-flow

4.12.1
A flow-control device shall not completely shut off the flow of water when
(a) fitted to a faucet or fitting; or
(b) fitted to, or integral with, a shower head or hand-held shower.

4.12.2
Faucets or fittings that have integral flow-control devices downstream of the primary shut-off valves that completely shut off the flow of water shall have check valves installed in the faucet or fitting to prevent cross-flow. These check valves shall meet the requirements specified in Clause 5.3.3.

4.13 Fittings incorporating electrical features

4.13.1 General
Fittings incorporating electrical features shall comply with the applicable CSA or UL Standards. In addition, they shall receive their electrical power from a low-voltage circuit that has a peak open-circuit potential of not more than 42.2 V and is supplied by
(a) a primary battery supply;

--`,,```,,,,````-`-`,,`,,`,`,,`---

Copyright ASME International
Provided by IHS under license with ASME
No reproduction or networking permitted without license from IHS
Not for Resale

(b) a suitable Class 2 low-voltage transformer complying with the requirements of CAN/CSA-C22.2 No. 223, UL 1310, or UL 1585; or
(c) a combination of a transformer and fixed impedance that, as a unit, complies with the requirements for a Class 2 transformer, as specified in Item (b).

4.13.2 Testing

When used in conjunction with a plumbing fitting, electrical plumbing controls, including solenoid valves, shall
(a) be considered components of the plumbing fitting;
(b) be tested with the fitting; and
(c) comply with the requirements of Clause 5.6.

Replacement of a battery during the life cycle testing specified in Clause 5.6 shall not be considered a failure.

4.14 Materials

Coupling nuts, locknuts, and spout-holding nuts shall be made from the following materials:
(a) copper alloys with a minimum copper content of 56%;
(b) stainless steel alloys of the 300 or 400 series; or
(c) plastics.

4.15 Automatic compensating valve temperature control

Automatic compensating valves shall
(a) comply with the requirements of Clause 5.10 or ASSE 1016;
(b) be equipped with an adjustable means to limit the setting of the device toward the hot position;
(c) be adjustable by the user; and
(d) have no downstream water-temperature-adjustment devices.

4.16 Lawn and sediment faucets

When the inlet to a lawn or sediment faucet is installed with a slope of 1% to the faucet, the faucet shall drain at least 50% of the volume of the inlet shank and pipe when connected to a 1.2 m (48 in) length of standard weight pipe of the same nominal diameter as the inlet to the faucet.

5 Performance requirements and test methods

5.1 General

5.1.1 Preconditioning

Before testing, specimens shall be conditioned at ambient laboratory conditions for not less than 12 h.

5.1.2 Installation for testing

For test purposes, specimens shall be installed in accordance with the manufacturer's instructions.

5.1.3 Applicable tests

A summary of the applicable tests, by fitting type, is provided in Table B.1. It shall not be necessary to conduct the tests in a particular order, unless a sequence is specified in this Standard.

5.2 Coatings

5.2.1 General

The fittings selected for testing shall be as received from the manufacturer and shall not have been

Copyright ASME International
Provided by IHS under license with ASME
No reproduction or networking permitted without license from IHS
Not for Resale

subjected to any other test. The significant surfaces of the coated components shall be free of surface defects and uncoated areas, and shall not be stained.

5.2.2 Corrosion (all substrates and coatings)

5.2.2.1 Performance requirements

After undergoing the applicable test specified in Clause 5.2.2.2.1, coatings shall not show more than one surface defect in any 650 mm^2 (1.0 in^2) area of the significant surface, or up to three surface defects on a 25 mm (1.0 in) length of parting line. The surface defects shall be not larger than 0.8 mm (0.03 in) in any dimension.

If widely scattered surface defects are observed after testing (as occasionally occurs), such defects shall not significantly deface or adversely affect the function of the coated part.

5.2.2.2 Test procedure

5.2.2.2.1

The coated parts shall meet the performance requirements of Clause 5.2.2.1 after being subjected to one of the following corrosion tests:

(a) ASTM G 85 (Annex A1 — acetic acid): the test duration shall be 8 h for SC-1 and 24 h for SC-2.
(b) ASTM B 117 (neutral salt): this test shall be applicable to SC-2 devices and shall have a duration of 24 h.
(c) ASTM B 368 (CASS): this test shall be applicable to SC-2 devices and shall have a duration of 4 h.
(d) ASTM B 380 (Corrodkote): this test shall be applicable to SC-2 devices and shall have a duration of 4 h.

Note: *If more than one test method is specified, the manufacturer may specify which method is to be used. SC-1 and SC-2 are defined in Clause 3.1.*

5.2.2.2.2

An SC-1 specimen that passes the SC-2 test shall be considered to have met the requirements of Clause 5.2.2.2.1.

5.2.3 Adhesion

5.2.3.1 Performance requirements

The coating and the separate layers of multi-layer coatings shall be sufficiently adherent to each other and to the base material to comply with the requirements of one of the adhesion tests specified in Clause 5.2.3.2, 5.2.3.3, or 5.2.3.4.

5.2.3.2 Electrodeposited and PVD coatings on metals

Specimens shall be tested to and meet the requirements of one of the following adhesion tests specified in ASTM B 571:

(a) Paragraph 4: burnish test;
(b) Paragraph 7: file test;
(c) Paragraph 8: grind-saw test; or
(d) Paragraph 9: heat-quench test.

5.2.3.3 Electrodeposited and PVD coatings on plastics

5.2.3.3.1 Performance requirements

The adhesion of organic coatings shall be evaluated following the procedure specified in Clause 5.2.3.4 and shall not be evaluated during the test specified in Clause 5.2.3.3.2.

Copyright ASME International
Provided by IHS under license with ASME
No reproduction or networking permitted without license from IHS
Not for Resale

Fittings or component parts of fittings that have electrodeposited coatings on plastic bases, including those with additional organic coatings, shall meet the following requirements when tested in accordance with Clause 5.2.3.3.2:

(a) No surface defects shall be present on significant surfaces.
(b) Non-significant surfaces, gates, and parting lines may have minor cracks no longer than 6 mm (0.25 in) provided that there is no loss of adhesion between the base material and the coating.
(c) Blisters not exceeding 6 mm^2 (0.01 in^2) in area shall be acceptable within 6 mm (0.25 in) of an injection point. If an injection point is within 6 mm (0.25 in) of a significant surface, Item (a) shall apply.
(d) Warpage shall be permitted only where it does not affect the performance of the fitting or component.

5.2.3.3.2 Thermal cycling procedure

Before the thermal cycling test is begun, the fittings or component parts of fittings shall be examined and any surface imperfections, such as small mould imperfections, shall be noted. These surface imperfections shall not be considered failures after the thermal cycling test unless they develop into surface defects.

Under dry conditions, the specimens shall be subjected consecutively to four complete cycles of temperatures, with each complete cycle consisting of the following steps in the following order:

(a) –40 ± 2 °C (–40 ± 4°F) for 20 min to 1 h;
(b) 20 ± 5 °C (68 ± 9°F) for a minimum of 20 min;
(c) 75 ± 2 °C (167 ± 4°F) for 20 min to 1 h; and
(d) 20 ± 5 °C (68 ± 9°F) for a minimum of 20 min.

The temperatures specified in Items (a) to (d) shall be measured within 50 mm (2 in) of the centre of the location of the specimens. Temperature ramping shall be permitted for achieving the temperatures specified in Items (a) to (d). For the steps specified in Items (a) and (c), the temperature ramping time (if any) plus the time during which the specimen is at the specified temperature (a minimum of 20 min) shall not exceed 1 h.

During the testing, there shall be free circulation of air around the specimens, and most of their surface area shall not be in contact with other specimens or with the holding container.

5.2.3.4 Organic coatings

The adhesion of organic coatings shall be tested in accordance with Method A of ASTM D 3359. The organic coating shall have an adhesion rating of 3A or better.

5.2.4 Decorative organic coatings

5.2.4.1 General

In addition to meeting the requirements of the adhesion testing specified in Clause 5.2.3.4, decorative organic coatings shall show no surface defects when tested in accordance with Clauses 5.2.4.2 to 5.2.4.4.

5.2.4.2 Water degradation

Specimens shall be immersed in distilled water maintained at 38 ± 1 °C (100 ± 2°F) for 24 ± 0.5 h in a corrosion-proof container and then removed and examined.

5.2.4.3 Soap and cleaner effects

Two drops (0.10 mL total) of each of the following solutions shall be applied to the organic coating (preferably on a flat surface) and allowed to remain there for 16 h:

(a) ammonium hydroxide (6N);
(b) sodium hydroxide (6N);
(c) methanol (100%); and
(d) surfactant (100% polyethylene oxyethanol).

At the end of the 16 h period, the excess liquid shall be removed by rinsing with water and the coating shall be dried and examined.

Note: *Non-ionic surfactants meeting the requirement include GAF Igepal CO, GAF Igepal CA, and Shell Triton X-100.*

Copyright ASME International
Provided by IHS under license with ASME
No reproduction or networking permitted without license from IHS
Not for Resale

© American Society of Mechanical Engineers
© Canadian Standards Association

5.2.4.4 Abrasion resistance

Specimens shall be tested in accordance with Method A of ASTM D 968 using 12 L of silica sand on a relatively flat surface of the specimen. The finish shall not erode to the point of exposing the surface directly beneath.

5.3 Pressure and temperature

5.3.1 Static and dynamic seals

5.3.1.1 Failure criteria

Seals of plumbing supply fittings, except those of automatic compensating valves (see Clause 5.10.3.1), shall not leak or otherwise fail when tested in accordance with Clauses 5.3.1.2 to 5.3.1.4.

5.3.1.2 Procedure with the valve closed

The specimen shall be brought to equilibrium test temperatures in an ambient environment of 20 ± 5 °C (68 ± 9°F) by running water through it at the temperatures specified in Clause 5.3.1.4. Then, with the valve in the closed position, the specimen shall be subjected to the pressures specified in Clause 5.3.1.4, for 5 min each.

5.3.1.3 Procedure with the outlet(s) blocked

The specimen shall be brought to equilibrium test temperatures in an ambient environment of 20 ± 5 °C (68 ± 9°F) by running water through it at the temperatures specified in Clause 5.3.1.4. The outlet(s) shall then be blocked and the specimen shall be subjected to the pressures specified in Clause 5.3.1.4, for 5 min each.

5.3.1.4 Test temperatures and pressures

Test temperatures and pressures shall be as follows:

(a) 140 ± 14 kPa and 10 ± 6 °C (20 ± 2 psi and 50 ± 10°F);
(b) 860 ± 14 kPa and 10 ± 6 °C (125 ± 2 psi and 50 ± 10°F);
(c) 140 ± 14 kPa and 66 ± 6 °C (20 ± 2 psi and 150 ± 10°F); and
(d) 860 ± 14 kPa and 66 ± 6 °C (125 ± 2 psi and 150 ± 10°F).

Devices intended only for cold water applications shall be tested in accordance with Items (a) and (b) only.

5.3.2 Burst pressure

5.3.2.1 Failure criteria

Fittings shall withstand a hydrostatic burst pressure test at the pressures specified in Clause 5.3.2.2 or 5.3.2.3, without permanent distortion or failure of the pressure envelope.

5.3.2.2 Terminal fittings

Terminal fittings shall withstand a hydrostatic pressure of 3450 kPa (500 psi) for 1 min. The pressure shall be applied to the inlet with the valve(s) closed. Fittings may be of the pressure-relieving type provided that the relief occurs at a pressure above 1030 kPa (150 psi) and the relief discharge is into the fixture.

5.3.2.3 Line fittings

Line fittings shall withstand a hydrostatic pressure of 3450 kPa (500 psi) for 1 min. The pressure shall be applied to the inlet with the outlet blocked and the valve open.

Copyright ASME International
Provided by IHS under license with ASME
No reproduction or networking permitted without license from IHS
Not for Resale

5.3.3 Cross-flow check valves

Cross-flow check valves shall not leak more than 35 mL/min (0.01 gpm) out of one supply inlet when the opposite supply inlet is pressurized to 35 kPa (5 psi) with water at 10 ± 6 °C (50 ± 10°F) for 1 min with the primary shut-off valves open and all outlets blocked. This test shall be run before and after the life cycle test specified in Clause 5.6.

5.3.4 Hose assemblies

5.3.4.1 Failure criteria

Hose assemblies shall not fail or leak when tested in accordance with Clauses 5.3.4.2 and 5.3.4.3.

5.3.4.2 Torque

Hose assemblies and threaded connections shall be tested as specified in Clause 5.3.1.3 with the threaded connections tightened to

(a) the torque required to affect the seal; and
(b) 150% of the torque required in Item (a).

5.3.4.3 Burst pressure

Hose assemblies shall be tested at a hydrostatic pressure of 690 kPa (100 psi) for 1 h, followed by a burst pressure test of 2000 kPa (290 psi) for 1 min using water at 10 ± 6 °C (50 ± 10°F).

5.3.5 Ball joints

Shower head, body spray, and hand-held shower assembly ball joints shall not leak in any position more than 35 mL/min (0.01 gpm) measured over 5 min when tested at 345 ± 35 kPa (50 ± 5 psi) flowing.

5.3.6 Diverters

5.3.6.1 Bath and shower

5.3.6.1.1

The rate of the leakage out of the tub spout of bath and shower diverters shall not exceed 400 mL/min (0.1 gpm) when tested in accordance with Clause 5.3.6.1.2.

5.3.6.1.2

Bath and shower diverters shall be tested for rate of leakage out of the tub spout at 69 kPa (10 psi) flowing pressure, measured between the diverter and the secondary outlet at 300 mm (12 in) from the diverter, with water at 38 ± 6 °C (100 ± 10°F). Measurements shall be taken for 5 min, beginning 1 min after the diverter is activated.

5.3.6.2 Kitchen and lavatory

5.3.6.2.1

The rate of leakage out of the spout of kitchen and lavatory side spray diverters shall not exceed 1 L/min (0.3 gpm) when tested in accordance with Clause 5.3.6.2.2.

5.3.6.2.2

Kitchen and lavatory side spray diverters shall be tested for rate of leakage out of the spout at 140 ± 7 kPa (20 ± 1 psi) and 690 ± 7 kPa (100 ± 1 psi) flowing pressure with water diverted to the side spray using water at 10 ± 6 °C (50 ± 10°F).

Copyright ASME International
Provided by IHS under license with ASME
No reproduction or networking permitted without license from IHS
Not for Resale

© American Society of Mechanical Engineers
© Canadian Standards Association

5.4 Flow rate

5.4.1 Supply fittings

Fittings and accessories shall meet the minimum and maximum flow rate requirements specified in Table 1, at the flowing pressures specified in Clause 5.4.2.3. These requirements shall be met before and after the life cycle tests specified in Clause 5.6 or 5.10.5.

5.4.2 Test procedure

5.4.2.1

The specimen shall

(a) be thoroughly flushed before measuring the flow rate;
(b) be connected to a smooth-interior pipe or tubing with a length equal to at least 20 times the inside diameter of the pipe or tubing at the inlet(s) of the fitting;
(c) have a pipe or tubing of the length specified in Item (b) connected to the outlet of the fitting if the fitting does not discharge to the atmosphere;
(d) be connected to a pipe or tubing of the same nominal size as the fitting connections;
(e) have its standard accessories installed, when tested for compliance with the maximum flow rates specified in Table 1; and
(f) have its standard accessories removed, when tested for compliance with the minimum flow rates specified in Table 1.

If the accessories are supplied separately, they shall be tested as separate devices using commercially available pipe or tubing.

The test set-ups shall be as shown in Figure 4.

5.4.2.2

Other flow rate test conditions shall be as follows:

(a) the upstream pressure tap(s) and downstream pressure tap (if required) shall be located as shown in Figure 4;
(b) pressure tap size and configuration shall conform to ASME PTC 19.2 or ANSI/ISA-75.02;
(c) if a fluid meter is used to measure flow rate, the installation shall be in accordance with ASME PTC 19.5; and
(d) if the time/volume method is used, the container shall be of sufficient size to hold the collected water for a minimum of 1 min.

5.4.2.3

All fittings shall be tested at the maximum flow setting, if adjustable, with both hot and cold water valves fully open on combination fittings.

The flow rate test shall use water between 4 and 65 °C (40 and 150°F) in accordance with the intended end use of the fitting, and shall also be conducted under the following conditions:

(a) for minimum flow: be conducted at 140 ± 7 kPa (20 ± 1 psi) at the inlet when water is flowing;
(b) for maximum flow for faucets: be conducted at 410 ± 7 kPa (60 ± 1 psi) at the inlet when water is flowing; and
(c) for maximum flow for shower heads: be conducted at 550 ± 7 kPa (80 ± 1 psi) with water flowing at 38 ± 6 °C (100 ± 10°F), and be maintained for at least 1 min.

Note: *See Clause 4.12 for additional cross-flow requirements.*

5.5 Operating requirements

5.5.1

The torque or force required to open, operate, and close a manually activated valve or control shall not exceed either the operating torque or linear force specified in Table 2 when tested at the temperatures and pressures specified in Clause 5.3.1.4.

Copyright ASME International
Provided by IHS under license with ASME
No reproduction or networking permitted without license from IHS
Not for Resale

5.5.2
Accessible designs shall be tested at the temperatures and pressures specified in Clause 5.3.1.4, except that the high pressure shall be 550 ± 14 kPa (80 ± 2 psi) instead of 860 ± 14 kPa (125 ± 2 psi).

5.5.3
Swing spouts, including those with pullout spouts, shall be tested at a supply pressure of 860 ± 14 kPa (125 ± 2 psi), with water at 10 ± 6 °C (50 ± 10°F). The force required to turn the spouts shall not exceed 45 N (10 lbf) measured at the end of the spout.

5.5.4
At a supply pressure of 860 ± 14 kPa (125 ± 2 psi), with water at 38 ± 6 °C (100 ± 10°F), shower head, body spray, and hand-held shower assembly ball joints shall not require a moving force greater than 45 N (10 lbf) at the farthest point from the ball joint.

5.6 Life cycle

5.6.1 Requirements

5.6.1.1 General
Fittings incorporating moving parts or parts subject to wear shall be tested in accordance with Clause 5.6.2 for the number of cycles specified in Table 3, except for automatic compensating valves, which shall be subjected to the life cycle test specified in Clause 5.10.5.

Devices, accessories, or components without moving parts that convey water shall be life cycle tested in accordance with Clause 5.6.2.2.

The specimens shall be installed in accordance with the manufacturer's instructions.

During and after the test, the specimens shall continue to function as they did at the beginning of the test and shall not develop any defects that could adversely affect their functionality, serviceability, or appearance. Their appearance shall meet the requirements specified in Clause 5.2.3.3.1.

In addition to the requirements specified in this Clause, valves, swing spouts, shower heads, body sprays, hand-held shower assemblies, and diverters shall meet the applicable requirements specified in Clauses 5.6.1.2 to 5.6.1.5 after the life cycle test specified in Clause 5.6.2.

5.6.1.2 Valves or controls
Manually activated valves or controls

(a) shall open, operate, and close with a torque or force that does not exceed 120% of that specified in Table 2 when tested in accordance with Clause 5.5 (except for accessible design valves, which shall not exceed 100% of the force specified in Table 2); and
(b) may have the packing nut tightened once during the test to stop leakage along the stem.

5.6.1.3 Swing spouts
Swing spouts

(a) shall not leak at the spout joint when tested in accordance with Clause 5.3.1.3;
(b) may have the spout nut tightened once during the test to stop leakage; and
(c) shall not require a turning force greater than 45 N (10 lbf) at the end of the spout when the supply pressure is 860 kPa (125 psi) and the water temperature is 10 ± 6 °C (50 ± 10°F).

Swing spouts with pullout spouts shall not require a turning force greater than 45 N (10 lbf) at the end of the spout.

5.6.1.4 Shower heads, body sprays, and hand-held shower assemblies
Shower heads, body sprays, and hand-held shower assemblies

(a) shall not leak more than 35 mL/min (0.01 gpm) at the ball joint in any position when tested in accordance with Clause 5.3.5;

Copyright ASME International
Provided by IHS under license with ASME
No reproduction or networking permitted without license from IHS
Not for Resale

(b) may have the ball joint packing nut tightened once during the test to reduce leakage; and
(c) shall not require a moving force greater than 45 N (10 lbf) at the farthest point from the ball joint when the supply pressure is 860 ± 14 kPa (125 ± 2 psi) and the water temperature is 38 ± 6 °C (100 ± 10°F).

5.6.1.5 Diverters

Diverters
(a) shall operate with a torque or force that does not exceed 120% of the torque or force specified in Table 2, when tested in accordance with Clause 5.5 (except for accessible design diverters, which shall not exceed 100% of the force specified in Table 2);
(b) shall not (if they are bath or shower diverters) leak more than 1 L/min (0.3 gpm) out of the tub spout when tested in accordance with Clause 5.3.6.1.2; and
(c) shall not (if they are kitchen or lavatory side spray diverters) leak more than 1 L/min (0.3 gpm) out of the spout when tested in accordance with Clause 5.3.6.2.2.

In addition to the requirements specified in Items (a) to (c), a bath and shower automatic reset diverter shall be considered to have failed this test if it does not remain functional and reset itself to the tub position.

5.6.2 Test method

5.6.2.1 Test conditions

The speed of the life cycle test apparatus shall be adjusted to 1500 ± 150 cycles of operation per hour unless otherwise specified in this Standard or by the manufacturer.

Water at 345 ± 35 kPa (50 ± 5 psi) flowing and 550 kPa (80 psi) maximum static pressure (valve closed) shall be supplied to the specimen throughout the test.

Hot water for the life cycle test shall be at 66 ± 6 °C (150 ± 10°F), and cold water shall be at 10 ± 6 °C (50 ± 10°F).

For devices that flow in excess of 15 L/min (4.0 gpm) at 345 ± 35 kPa (50 ± 5 psi) flowing, the outlet may be restricted to a flow rate of not less than 15 L/min (4.0 gpm) during the life cycle test.

Fittings or valves in fittings that are intended to be used only with cold water shall be tested only with cold water.

Fittings or valves in fittings that are intended to be used only with hot water shall be tested to the temperature cycles specified in Clause 5.6.2.2.

5.6.2.2 Test procedure

Unless otherwise specified in this Standard, fittings shall be temperature cycled by supplying hot water to both supplies and then supplying cold water to both supplies every 1000 volume-control cycles (closed-open-closed).

Devices, accessories, or components without moving parts that convey water shall be temperature cycled for at least 250 cycles by supplying hot water and then cold water through them for a minimum of 10 min exposure at each temperature.

For single-control mixing valves, hot and cold water shall be supplied alternately to both supplies and then switched every 1000 combined cycles. One combined cycle shall be defined as one volume-control cycle (closed-open-closed) and one temperature-control cycle (hot-cold-hot).

For two-handle mixing valves, the hot and cold water valves shall be opened and closed simultaneously.

Note: *The tests specified in this Clause may be started with cold water and then switched to hot water as long as the specified sequences are maintained.*

Copyright ASME International
Provided by IHS under license with ASME
No reproduction or networking permitted without license from IHS
Not for Resale

5.6.3 Fittings and other control devices

5.6.3.1 Set-up

The specimen shall be positioned so that the life cycle test apparatus can operate it through its normal operating range without imposing forces inconsistent with the normal operation. The specimen shall be installed as it would be in its intended application.

5.6.3.2 Mixing valves

For fittings with a rotary action valve, the apparatus shall be adjusted to turn the valve and any associated handle mechanism from the fully closed position to a position between 37% and 75% of the fully open position, but not exceeding 360°. This test shall simulate the intended operating motion of the fitting without making contact with the end stops, except as agreed to by the manufacturer.

For single-control mixing valves or mixing valves with separate volume and temperature controls, the apparatus shall be adjusted to operate the valve as follows:

(a) The volume control cycle shall be moved from closed to 80% (minimum) of the fully open position, without making contact with the end stops, and back to closed.

(b) The temperature control cycle shall be moved a minimum of 80% of the range between the full hot position to the full cold position, and back to the full hot position, without making contact with the end stops, except as agreed to by the manufacturer.

(c) The total number of cycles specified in Table 3 shall be calculated by adding together the following:
  (i) the total volume control cycles (open-closed-open) in the hot position;
  (ii) the total volume control cycles (open-closed-open) in the cold position; and
  (iii) the total number of temperature control cycles (full open hot position to full open cold position and back to full open hot position). The sequence shall be seven open-closed-open cycles in the hot position, then a switch to the cold position, then seven open-closed-open cycles in the cold position, and then a switch back from the cold position to the hot position, for a total of 15 cycles.

For single-handle mixing valves of the cycling type, the apparatus shall be adjusted to operate the specimen from closed to 80% (minimum) of the range between the cold position and the hot position, and back to closed, without making contact with the end stops, except as agreed to by the manufacturer.

Note: *The tests specified in this Clause may be started in the cold position and then switched to the hot position as long as the specified sequences are maintained.*

5.6.3.3 Test loads

The test apparatus shall apply a torque or force sufficient to operate the specimen throughout the test but not exceeding 120% of the applicable torque or force specified in Table 2.

5.6.3.4 Metering fittings

Metering fittings shall close before reactivation of the next cycle. Adjustable metering fittings shall be set to run for approximately 5 s after actuation. Non-adjustable metering fittings shall be operated at their maximum run duration.

5.6.3.5 Other devices

5.6.3.5.1

Self-closing valves, including electronically actuated fittings, shall be opened to the applicable extent specified in Clause 5.6.3.2 and allowed to close at a rate specified by the manufacturer.

5.6.3.5.2

The following devices shall be tested at a flowing pressure of 345 ± 35 kPa (50 ± 5 psi) flowing through the device outlet with the highest flow rate, with their standard accessories installed:

(a) shampoo diverters;

(b) shower head adjustment mechanisms;

Copyright ASME International
Provided by IHS under license with ASME
No reproduction or networking permitted without license from IHS
Not for Resale

(c) shower head flow or function controls;
(d) side spray flow or function controls;
(e) multi-function aerators; and
(f) bidet diverters.

5.6.3.5.3

The following devices shall be tested at a flowing pressure of 345 ± 35 kPa (50 ± 5 psi) at 9.5 ± 0.4 L/min (2.5 ± 0.1 gpm) through a fixed outlet, or with their standard accessories installed, when installed at a maximum distance of 2.0 m (78 in) from the outlet of the diverter:
(a) shower-to-shower diverters;
(b) in-line flow-control devices in showers;
(c) tub-to-shower diverters; and
(d) tub spout diverters.

5.6.3.5.4

For tub-to-shower diverters and tub-spout diverters, the specimen shall be mechanically activated to deliver full flow through the outlet. The flow of water shall be shut off by a bath or shower supply fitting or control valve installed upstream of the specimen. Diverters shall be reset to the tub position mechanically except for automatic diverters, which are intended to reset themselves to the tub position. The test apparatus for automatic diverters may relieve the shower head supply pressure while simultaneously shutting off the supply valve to accelerate the life cycle test.

5.6.3.5.5

One complete cycle for a device shall consist of switching the device from one position to the other and back to the original position. In the case of devices with multiple adjustable positions, one complete cycle shall consist of switching from one extreme position, through all the intermediate positions, to the other extreme position and back to the original position.

5.6.3.5.6

For shower head, body spray, and hand-held shower assembly ball joints, one complete cycle shall consist of moving the device horizontally from an initial full-side position to the opposite full-side position and back to the initial-side position without making contact with surfaces at the extreme ends of the path.

5.6.4 Swing spouts

The life cycle test for swing spouts shall be conducted as follows:
(a) Mount the specimen on the life cycle test apparatus with the axis about which the spout turns mounted vertically and in line with the axis of the drive spindle.
(b) Fit the forked end of the drive adapter loosely over the spout and allow the spout tip to freely move vertically.
(c) Attach a weight with a mass of 0.18 kg (0.40 lb) to the spout outlet connection.
(d) Adjust the apparatus to turn the spout through an equal arc on each side of the centre through 90% of the total path and in no case greater than 90°.
(e) Establish and maintain sufficient force to rotate the spout throughout the test, but in no case exceed 45 N (10 lbf) applied at the end of the spout.
(f) Alternate cold and hot water every 1000 cycles, starting with cold.

The hot and cold water temperatures and the water pressures shall be those specified in Clause 5.6.2.1.

5.6.5 Shower hoses, pullout spout hoses, and side spray hoses

5.6.5.1

Hoses shall be subjected to a 67 N (15 lbf) tension test for 10 000 cycles, with the force applied gradually at the end of the hose connector.

Copyright ASME International
Provided by IHS under license with ASME
No reproduction or networking permitted without license from IHS
Not for Resale

5.6.5.2
The end connections of hoses shall not pull out when an axial force is applied and increased to 334 N (75 lbf) by extending the hose at a rate not faster than 127 cm (50 in) per minute and then maintained for 15 s.

5.6.5.3
Following the completion of the test specified in Clause 5.6.5.2, the hose shall be bent for one complete turn around a mandrel 50 mm (2.0 in) in diameter. The end connections of the hose shall then be pulled until a force of 67 N (15 lbf) is applied, or until the hose comes fully into contact with the mandrel, whichever occurs first. The hose and the end connections shall not leak when tested in accordance with Clause 5.3.1.3.

5.7 Resistance to installation loading

5.7.1 Bending strength

5.7.1.1 Performance requirements
No cross-section of a rigid waterway on the pressure side of a terminal supply fitting or on both sides of a non-terminal supply fitting shall be damaged when tested in accordance with Clause 5.7.1.2. This requirement shall not apply to waterways through a solder joint.

5.7.1.2 Test procedure
The force shall be applied not closer to the cross-section being tested than twice the major diameter of that section. The bending moment shall be as specified in Figure 3.

5.7.2 Thread torque strength
Metal threaded connections shall withstand the torque load specified in Table 4 without evidence of cracking or separation. The torque shall be applied with a torque wrench that has a maximum allowable inaccuracy of 3% of the full-scale reading. This test shall apply to NPT and NPSM supply connections only.

5.8 Resistance to use loading

5.8.1 Operating controls

5.8.1.1
Operating controls shall withstand a torque or force, applied in the manner required to operate the control, three times greater than that specified in Table 2. Fracture of the handle or stem shall constitute failure.

5.8.1.2
Wall-mounted bath or shower controls that can be grasped shall not pull off when subjected to an axial force of 445 N (100 lbf).

5.8.1.3
All other operating controls shall not pull off when subjected to an axial force of 45 N (10 lbf).

5.8.2 Maintenance of installed position
Hand-held showers provided with a lug or other device to hang the hand-held shower shall be installed in their mounted position and shall then have a force of 67 N (15 lbf) applied at the centre of the handgrip for 1 min. No damage that would prevent the hand-held shower from being re-hung in its intended position shall be allowed.

Copyright ASME International
Provided by IHS under license with ASME
No reproduction or networking permitted without license from IHS
Not for Resale

© American Society of Mechanical Engineers
© Canadian Standards Association

5.8.3 Swing spout strength

5.8.3.1 Performance requirements

When tested in accordance with Clause 5.8.3.2, swing spouts shall withstand a mass of 6.4 kg (14 lb) attached at the spout outlet and the angle at the spout outlet shall not change by more than 15°.

5.8.3.2 Test procedure

The swing spout strength test shall be conducted as follows:

(a) Mount the faucet in accordance with the manufacturer's instructions.
(b) Measure the spout outlet angle from the vertical.
(c) Suspend the mass from the centreline of the spout outlet for 3 min and then remove it.
(d) After 30 min, measure the spout outlet angle.

5.9 Backflow prevention

5.9.1 General

All fittings shall be tested in accordance with the applicable tests specified in Clauses 5.9.2 to 5.9.5 and then retested within 48 to 96 h of completing all applicable life cycle tests specified in Clause 5.6.

5.9.2 Fittings with plain outlets

5.9.2.1 Air gaps

Fittings with plain outlets shall be protected by an air gap in accordance with ASME A112.1.2. For deck-mounted fittings, the air gap shall be measured as the vertical distance from the plane of the mounting surface of the fitting to the lowest point of the outlet. Where the fittings incorporate threads to accept an aerator or similar device, this measurement shall be taken with the aerator or similar device installed (see Figure 1).

A critical level mark on the fittings shall be permitted as an alternative to the air gap. The critical level shall be confirmed by the test method specified in Clause 5.9.2.2.

5.9.2.2 Test procedure

5.9.2.2.1

The specimen shall be set up as follows:

(a) Remove all checking members or open them fully.
(b) Install the specimen as recommended by the manufacturer by mounting it over a container measuring approximately 380 × 250 × 150 mm (15 × 10 × 6 in). Ensure that the mounting surface is plumb or level with the water surface in the container.
(c) Allow the outlet of the specimen to have a free area at least four times the area of its effective opening between the container and the outlet.

5.9.2.2.2

The critical air gap test for fittings with plain outlets shall be conducted as follows:

(a) Connect the inlet(s) of the specimen to a vacuum source.
(b) Measure the vacuum at the inlet(s) of the specimen.
(c) Provide a means to change the water level in the container, relative to the outlet of the specimen.
(d) Start the test with the water level at the mounting surface level.
(e) With the specimen fully open from the inlet(s) to the place of discharge to the atmosphere, apply a vacuum of 85 kPa (25 in of mercury [Hg]) to the inlet(s).
(f) Hold for 1 min. Back siphonage at this time shall be a cause for rejection.
(g) Slowly bring the water level closer to the discharge outlet until the level at which back siphonage occurs is reached.

Copyright ASME International
Provided by IHS under license with ASME
No reproduction or networking permitted without license from IHS
Not for Resale

(h) At this level, measure and record the distance between the lowest point of the outlet of the specimen and the water surface.
(i) Return the specimen to atmospheric pressure.
(j) Starting with the water level higher than where back siphonage occurred, apply a vacuum of 85 kPa (25 in Hg) to the inlet(s).
(k) Slowly lower the water level until back siphonage ceases.
(l) Maintain the vacuum for 1 min to ensure that no water is being drawn into the discharge outlet.
(m) At this level, measure and record the distance between the lowest point of the outlet of the specimen and the water surface.

The larger of the distances determined in Items (h) and (m) shall be the critical air gap of the fitting.

The critical air gap test shall be repeated twice to confirm the critical air gap measurement.

The manufacturer's permanent critical level mark on the fittings (see Clause 5.9.2.1) shall be at or below the critical air gap determined by this test.

5.9.3 Fittings with a submersible outlet(s)

5.9.3.1 General

Fittings where the outlet(s) is submersible shall

(a) have a backflow prevention device(s) that complies with the applicable requirements of ASME A112.18.3 or the CAN/CSA-B64 Series; or
(b) comply with the applicable requirements specified in Clauses 5.9.3.2 and 5.9.3.3.

5.9.3.2 Single-outlet fittings with a submersible outlet

Single-outlet fittings with a submersible outlet shall comply with the requirements specified in Clause 5.9.4 and shall have an atmospheric vent between two check valves. The atmospheric vent shall be located downstream of the last control valve and the critical level of the device shall be a minimum of 25 mm (1 in) above the plane of the mounting surface of the fitting.

5.9.3.3 Side spray diverters

Side spray diverters shall comply with the requirements specified in Clause 5.9.5.

5.9.4 Backflow prevention devices used in single-outlet fittings with a submersible outlet

5.9.4.1 Test to determine the presence of hidden check valves

5.9.4.1.1 General

Fittings incorporating check valves shall be tested in accordance with Clause 5.9.4.1.4.

When the test is performed as specified in Clause 5.9.4.1.4, water shall be drawn into the sight tube, demonstrating that all check valves are fouled open and that there are no hidden check valves.

5.9.4.1.2 Settings

The procedure for testing the settings shall be as follows:

(a) Connect a sight tube in a leak-proof manner to the outlet of the specimen.
(b) Seal all atmospheric vent ports.
(c) Foul all check valves open.
(d) Install the specimen in accordance with Clause 5.9.4.1.3.
(e) Conduct the test in accordance with Clause 5.9.4.1.4.
(f) Once water is drawn into the sight tube, terminate the test.

Copyright ASME International
Provided by IHS under license with ASME
No reproduction or networking permitted without license from IHS
Not for Resale

5.9.4.1.3 Mounting

The specimen shall be mounted in its normal operating position in accordance with the manufacturer's instructions, and using the test set-up shown in Figure 6. The inlet pipe(s) shall be connected collectively to

(a) a water supply that can deliver water through the specimen at normal flow;
(b) a vacuum system that can maintain a 0 to 85 kPa (0 to 25 in Hg) vacuum; and
(c) the atmosphere.

The coloured-water reservoir shown in Figure 6 shall be located below the mounting surface level of the specimen. The coloured water in the reservoir shall be at the mounting surface level.

The terminal end of the sight tube shall be immersed 13 mm (0.5 in) below the mounting surface level of the coloured water in the reservoir. The sight tube shall be transparent and have an inside diameter of 13 ± 1.5 mm (1/2 ± 1/16 in).

5.9.4.1.4 Test procedure (see Figure 6)

The test to determine the presence of hidden check valves in single-outlet fittings with a submersible outlet shall be conducted as follows:

(a) Mount the specimen in accordance with Clause 5.9.4.1.3.
(b) Open Valve 3.
(c) Apply and hold a vacuum of 85 kPa (25 in Hg) for 5 min.
(d) Close Valve 3, gradually open Valve 2, and allow the pressure on the supply side of the specimen device to gradually return to atmospheric.
(e) Close Valve 2 and gradually open Valve 3.
(f) Gradually raise the vacuum test load from 0 to 85 kPa (0 to 25 in Hg) and then gradually reduce it to 0 kPa (0 in Hg).
(g) Create a surge effect by quickly opening and closing Valves 2 and 3 at least five times. The applied vacuum load shall vary from 0 to 85 to 0 kPa (0 to 25 to 0 in Hg) during the test.

5.9.4.2 Check valve leakage

5.9.4.2.1 General

Fittings incorporating check valves shall be tested in accordance with Clauses 5.9.4.2.3 and 5.9.4.2.4 to determine their resistance to leakage.

5.9.4.2.2 Performance requirements

There shall be no drop in the pressure applied to the outlet within the 5 min test period when performing the test specified in Clause 5.9.4.2.6.

5.9.4.2.3 Upstream check valves

The check valve leakage test for single-outlet fittings with a submersible outlet shall be conducted as follows:

(a) Block open or remove all check valves except the upstream check valve.
(b) Install the specimen in accordance with Clause 5.9.4.2.5.
(c) Conduct the test in accordance with Clause 5.9.4.2.6.

5.9.4.2.4 Downstream check valves

The check valve leakage test for single-outlet fittings with a submersible outlet shall be conducted as follows:

(a) Block open or remove all check valves except the downstream check valve.
(b) Install the specimen in accordance with Clause 5.9.4.2.5.
(c) Conduct the test in accordance with Clause 5.9.4.2.6.

Copyright ASME International
Provided by IHS under license with ASME
No reproduction or networking permitted without license from IHS
Not for Resale

5.9.4.2.5 Test set-up

The specimen shall be set up as follows:

(a) Mount the specimen in its normal operating position, in accordance with the manufacturer's instructions, and using the test set-up shown in Figure 5.
(b) Connect the inlet pipe(s) collectively to a water supply that can deliver water through the specimen at normal flow and to the atmosphere.
(c) Connect a pressurized water supply, as shown in Figure 5, to the specimen outlet in a leak-proof manner.

5.9.4.2.6 Test procedure (see Figure 5)

The check valve leakage test shall be conducted as follows:

(a) Mount the specimen in accordance with Clause 5.9.4.2.5.
(b) Seal all atmospheric vent ports.
(c) Open Valve 1 and purge the air from the system.
(d) Close Valve 1.
(e) Open Valve 2 to reduce the water pressure on the inlet side to 0.
(f) Gradually raise the outlet pressure to 1.4 kPa (0.2 psi).
(g) Isolate the pressure source for 5 min.
(h) Increase the outlet pressure to 35 kPa (5 psi).
(i) Isolate the pressure source for 5 min.

5.9.4.3 Adequacy of the atmospheric vent

5.9.4.3.1 General

For fittings incorporating an atmospheric vent, the adequacy of the atmospheric vent shall be verified by performing the test specified in Clause 5.9.4.3.3.

5.9.4.3.2 Performance requirements

The maximum allowable rise in water level in the sight tube shall be to within 25 mm (1.0 in) of the critical level of the device when the test is performed as specified in Clause 5.9.4.3.3.

Note: *The location of the critical level of the device may be determined in accordance with Clause 16 of ASME A112.18.3.*

5.9.4.3.3 Test procedure

The test for verifying the adequacy of the atmospheric vent shall be conducted as follows:

(a) Connect a sight tube in a leak-proof manner to the outlet of the specimen.
(b) Foul all check valves with a 0.81 mm (0.032 in) wire.
(c) Leave the atmospheric vent ports open.
(d) Install the specimen in accordance with Clause 5.9.4.1.3.
(e) Conduct the test in accordance with Clause 5.9.4.1.4.

5.9.5 Back siphonage prevention in side spray diverters

5.9.5.1 General

Fittings incorporating a side spray diverter shall meet the performance requirements of Clause 5.9.5.2 when tested in accordance with Clause 5.9.5.3.

5.9.5.2 Performance requirements

During testing in accordance with Clause 5.9.5.3, water shall not rise in the sight tube except for an upward bowing of the meniscus of not more than 3 mm (0.12 in).

Copyright ASME International
Provided by IHS under license with ASME
No reproduction or networking permitted without license from IHS
Not for Resale

© American Society of Mechanical Engineers
© Canadian Standards Association

5.9.5.3 Test procedure (see Figure 6)

The test shall be conducted as follows:

(a) Remove the spray head.
(b) Connect a sight tube in a leak-proof manner to the spray hose outlet of the specimen.
(c) Install the specimen in accordance with Clause 5.9.4.1.3.
(d) Open Valve 1.
(e) Flush the specimen with water for 5 min.
(f) Close Valve 1.
(g) Open Valve 2 to the atmosphere and allow water to drain from the device and from the hose.
(h) Conduct the test in accordance with Clause 5.9.4.1.4.

5.10 Automatic compensating valves (see Clause 4.15)

5.10.1 General

Automatic compensating valves for wall-mounted hand-held showers, shower heads, and body sprays shall meet the requirements specified in Clauses 5.10.2 to 5.10.8. The tests specified in Clauses 5.10.2 to 5.10.8 shall be conducted in the order in which they appear in this Standard.

5.10.2 High-temperature conditioning test

5.10.2.1 Performance requirements

Automatic compensating valves shall continue to meet the requirements specified in Clauses 5.10.3 to 5.10.8 after being subjected to the high-temperature conditioning test specified in Clause 5.10.2.2.

5.10.2.2 Test procedure

The high-temperature conditioning test shall be conducted as follows:

(a) Install the specimen as shown in Figure 7, with Valves V1, V2, and V3 in the fully open position.
(b) Establish and maintain an equal supply pressure of 310 ± 7 kPa (45 ± 1 psi) on both the hot and cold water supplies.
(c) Set the hot water temperature to 82 ± 3 °C (180 ± 5°F).
(d) Set the cold water temperature to 24 ± 3 °C (75 ± 5°F).
(e) Set the outlet to a temperature not exceeding 49 °C (120°F).
(f) Set the flow rate to 9.5 ± 1.0 L/min (2.5 ± 0.25 gpm) by adjusting Valve V3.
(g) Allow water to flow through the specimen for 5 min, then perform the tests specified in Clauses 5.10.3 to 5.10.8.

5.10.3 Pressure and burst pressure test

5.10.3.1 Performance requirements

Automatic compensating valves shall not leak after being pressure tested in accordance with Clause 5.10.3.2, and shall not leak through the body of the device when tested in accordance with Clause 5.3.2.

5.10.3.2 Test procedure

This pressure test shall be conducted only on automatic compensating valves, as follows:

(a) Open the seating member(s) of the specimen and close its outlet.
(b) Apply a water pressure of 860 ± 14 kPa (125 ± psi) with water at 10 ± 6 °C (50 ± 10°F) to the cold supply inlet and water at 66 ± 6 °C (150 ± 10°F) to the hot supply inlet for 5 min.
(c) Check for leaks.
(d) Repeat the test with the seating member(s) closed and the outlet open.
(e) Check for leaks.

Copyright ASME International
Provided by IHS under license with ASME
No reproduction or networking permitted without license from IHS
Not for Resale

5.10.4 Maximum torque and/or force adjustment

5.10.4.1 Performance requirements

Automatic compensating valves shall not exceed the torque or force specified in Table 2 when tested in accordance with Clause 5.10.4.2 and after having been subjected to the life cycle test specified in Clause 5.10.5.

5.10.4.2 Test procedure

In addition to the tests specified in Clause 5.5, the maximum torque and force test shall be conducted on automatic compensating valves, as follows:

(a) Set up the specimen as specified in Items (a) to (c) of Clause 5.10.6.3.1.
(b) Using a torque or force-measuring instrument attached to the end of the specimen's handle(s) or lever(s), move the handle(s) or lever(s) through their full operating range.
(c) Record the maximum required operating torque or force.

5.10.5 Life cycle test

5.10.5.1 Requirements

Automatic compensating valves shall not leak after the life cycle test specified in Clause 5.10.5.2 or require the packing nut to be tightened more than once.

5.10.5.2 Test procedure (see Figure 8)

The following life cycle test shall be conducted on automatic compensating valves only:

(a) Install the specimen as shown in Figure 8.
(b) Adjust the water supplies so that
    (i) temperature T1 at Valve V1 is maintained at a minimum of 60 °C (140°F);
    (ii) temperature T2 at Valves V1 and V2 is maintained at a maximum of 27 °C (80°F);
    (iii) pressure P1 at Valves V1 and V2 is maintained at 345 ± 35 kPa (50 ± 5 psi); and
    (iv) pressure P2 at Valves V1 and V2 is maintained at 172 ± 35 kPa (25 ± 5 psi).
(c) Adjust inlet supply A to a minimum temperature of 60 °C (140°F) and a pressure of 345 ± 35 kPa (50 ± 5 psi) and maintain these conditions. Adjust inlet supply C to a maximum temperature of 27 °C (80°F) and a pressure of 345 ± 35 kPa (50 ± 5 psi) and maintain these conditions. Then adjust the outlet temperature to 40.6 ± 3.0 °C (105 ± 5.0°F) and set the device to a minimum flow rate of 4.5 L/min (1.2 gpm).
(d) Test the control mechanism(s) for 20 000 cycles of the control dial.
(e) For specimens without a separate volume control, turn the temperature control dial at a constant rate between 5 and 20 cycles per minute through its full operating range.
(f) For specimens with a separate volume control, open the volume control, cycle the temperature control dial at a constant rate between 5 and 20 cycles per minute through its full operating range, then close the volume control.
(g) Life cycle test the control mechanism for 80 000 cycles, varying the sequence of water flowing through the specimen in the following order:
    (i) supply A and supply D for 4 s; and
    (ii) supply B and supply C for 4 s.
    One cycle shall consist of the steps specified in Items (i) and (ii).

Copyright ASME International
Provided by IHS under license with ASME
No reproduction or networking permitted without license from IHS
Not for Resale

5.10.6 Temperature control

5.10.6.1 Performance requirements

5.10.6.1.1 Pressure-compensating valves

When tested in accordance with Clauses 5.10.6.2, 5.10.6.3.1, and 5.10.6.3.2, pressure-compensating valves shall not exceed a temperature variation of ± 2.0 °C (± 3.6°F) from the set temperature after the initial 5 s following a temperature change at the outlet (Thermocouple TC3 in Figure 7). Within the initial 5 s following a temperature change at the outlet (TC3), temperature spikes exceeding ± 2.0 °C (± 3.6°F) from the set temperature shall be allowed as long as the elapsed time during which the temperature variation is greater than ± 2.0 °C (± 3.6°F) does not exceed 1 s for each spike (see Figures D.1 and D.2).

5.10.6.1.2 Thermostatic-compensating valves

When tested in accordance with Clauses 5.10.6.2, 5.10.6.3.1, and 5.10.6.3.3, thermostatic-compensating valves shall not exceed a temperature variation of ± 2.0 °C (± 3.6 °F) from the set temperature after the initial 5 s following a temperature change at the outlet (Thermocouple TC3 in Figure 7). Within the initial 5 s following a temperature change at the outlet (TC3 in Figure 7), the following temperature spikes shall be allowed:

(a) temperature spikes exceeding +3.0 °C (+5.4°F) from the set temperature shall be allowed as long as the elapsed time during which the temperature variation is greater than +3.0 °C (+5.4°F) does not exceed 1.5 s for each spike (see Figure D.1); and

(b) temperature spikes exceeding –5.0 °C (–9.0°F) from the set temperature shall be allowed as long as the elapsed time during which the temperature variation is greater than –5.0 °C (–9.0°F) does not exceed 1 s for each spike (see Figure D.2).

5.10.6.1.3 Combination pressure- and thermostatic-compensating valves

Combination pressure- and thermostatic-compensating valves shall comply with the requirements specified in Clauses 5.10.6.1.1 and 5.10.6.1.2.

5.10.6.2 Data gathering (see Figure 7)

Temperature measurements shall be taken with thermocouples and associated measuring equipment capable of detecting a 63.2% step change within 0.3 s with a frequency rate of 20 Hz (one value every 0.05 s). See Figure C.1.

Thermocouples TC1, TC2, and TC3 shall be Type J or T thermocouples in accordance with ISA MC96.1.

Thermocouple TC3 shall be located within the flow stream 914 ± 13 mm (36 ± 0.5 in) from the outlet.

Outlet piping size shall be the same size as the valve outlet connection size and shall be Type K or L copper tubing.

Temperature measurements shall be taken at the thermocouple locations identified as follows:

(a) All measurements shall be taken at a minimum rate of 20 Hz (one value every 0.05 s) for 25 ± 5 s unless otherwise specified.

(b) For pressure-compensating valves, the outlet temperature measurements (TC3) shall be recorded every 0.05 s.

(c) For thermostatic-compensating valves, the outlet temperature measurements (TC3) shall be averaged and recorded every 0.25 s.

(d) The pressure changes specified in Clauses 5.10.6.3.2 and 5.10.6.3.3 shall be accomplished in less than 1 s.

(e) The temperature-recording device shall be started 10 s before the step changes.

Notes:

(1) *For verifying the time constant of the temperature-measuring equipment, see Annex C.*

(2) *Data can be gathered in formats similar to those depicted in Figures D.3 and D.4.*

Copyright ASME International
Provided by IHS under license with ASME
No reproduction or networking permitted without license from IHS
Not for Resale

5.10.6.3 Test procedure

5.10.6.3.1 All automatic compensating valves (see Figure 7)

All automatic compensating valves shall be set up for testing as follows:

(a) Install the specimen as shown in Figure 7, with Valves V1, V2, and V3 in the fully open position.
(b) Adjust the hot and cold water supply line pressures directly upstream of the inlet connections to 310 ± 7 kPa (45 ± 1 psi), as measured by gauges G1 and G2.
(c) Adjust the temperatures at thermocouples TC1 and TC2 so that there is a minimum temperature differential of 44 °C (80°F) between the hot water temperature (minimum of 60 °C (140°F)) and the cold water temperature (maximum of 21 °C (70°F)).
(d) Adjust the specimen so that the outlet temperature at TC3 (point of use outlet) is 40.5 ± 0.5 °C (105 ± 1°F).
(e) Adjust Valve V3 so that the specimen delivers 9.5 ± 1.0 L/min (2.5 ± 0.25 gpm) and maintain the conditions established in Items (b) to (d).
(f) Flow water through the specimen for 1 min.
(g) The initial outlet temperature at TC3 shall be the average of the temperatures for the 10 s immediately preceding the temperature change at TC3 (point of use outlet) resulting from the pressure or temperature changes.

5.10.6.3.2 Pressure-compensating valves

In addition to the procedure specified in Clause 5.10.6.3.1, the temperature changes of pressure-compensating valves shall be observed and recorded at TC3 in Figure 7 for 25 ± 5 s after the steps specified in Items (a), (c), (e), and (g):

(a) Decrease the hot water pressure to 155 ± 7 kPa (22.5 ± 1 psi).
(b) Repeat the procedure specified in Items (b) to (g) of Clause 5.10.6.3.1.
(c) Increase the hot water supply pressure by 465 ± 7 kPa (67.5 ± 1 psi).
(d) Repeat the procedure specified in Items (b) to (g) of Clause 5.10.6.3.1.
(e) Decrease the cold water supply pressure by 155 ± 7 kPa (22.5 ± 1 psi).
(f) Repeat the procedure specified in Items (b) to (g) of Clause 5.10.6.3.1.
(g) Increase the cold water supply pressure by 465 ± 7 kPa (67.5 ± 1 psi).

5.10.6.3.3 Thermostatic-compensating valves

In addition to the procedure specified in Clause 5.10.6.3.1, the temperature changes of thermostatic-compensating valves shall be observed and recorded at TC3 in Figure 7 for 25 ± 5 s after the steps specified in Items (a), (c), (e) and (g):

(a) Reduce the hot water pressure to 248 ± 7 kPa (36 ± 1 psi).
(b) Repeat the procedure specified in Items (b) to (g) of Clause 5.10.6.3.1.
(c) Increase the hot water supply pressure to 372 ± 7 kPa (54 ± 1 psi).
(d) Repeat the procedure specified in Items (b) to (g) of Clause 5.10.6.3.1.
(e) Reduce the cold water supply pressure to 248 ± 7 kPa (36 ± 1 psi).
(f) Repeat the procedure specified in Items (b) to (g) of Clause 5.10.6.3.1.
(g) Increase the cold water supply pressure to 372 ± 7 kPa (54 ± 1 psi).
(h) Repeat the procedure specified in Items (b) to (g) of Clause 5.10.6.3.1.
(i) Increase the hot water supply temperature by 14 ± 0.5 °C (25 ± 1°F) at a rate of 3 ± 0.5 °C (5 ± 1°F) per minute.
(j) Record the temperature measurements for 25 s after the required 14 ± 0.5 °C (25 ± 1°F) temperature increase has been attained.

5.10.6.4 Combination pressure- and thermostatic-compensating valves

Combination pressure- and thermostatic-compensating valves shall be tested in accordance with Clauses 5.10.6.3.2 and 5.10.6.3.3.

Copyright ASME International
Provided by IHS under license with ASME
No reproduction or networking permitted without license from IHS
Not for Resale

5.10.7 Supply line pressure loss

5.10.7.1 Failure criteria

Automatic compensating valves shall reduce the discharge flow rate to 2 L/min (0.5 gpm) or less within 5 s after the cold water supply line has been closed in accordance with Clause 5.10.7.2. In addition, during that 5 s period, the water temperature at the outlet of the automatic compensating valve shall not exceed 49 °C (120°F) before the discharge flow rate is reduced to 2 L/min (0.5 gpm) or less.

5.10.7.2 Test procedure

The specimen shall be installed as shown in Figure 7, and the conditions shall be set in accordance with Clause 5.10.6.3.1.

The cold water supply shall be closed within 1 s. Temperature measurements at TC3 and the flow rate shall be recorded for a minimum of 5 s after Valve V2 is fully closed.

5.10.8 Temperature and high limit control

5.10.8.1 Performance requirements

When tested in accordance with Clause 5.10.8.2, automatic compensating valves shall

(a) be adjustable from the cold position up to a minimum of 38 °C (100°F);
(b) limit the outlet temperature to 49 °C (120°F); and
(c) flow at a minimum of 8.5 L/min (2.25 gpm).

5.10.8.2 Test set-up

The specimen shall be installed as shown in Figure 7 and shall be set at an equal pressure of 310 ± 7 kPa (45 ± 1 psi) on both the hot and cold water supplies, and at a flow rate of 9.5 ± 1.0 L/min (2.5 ± 0.25 gpm) by adjusting Valve V3. The specimen shall meet the requirements of Clause 5.10.8.1 when the procedures specified in all phases of Clause 5.10.8.3 are carried out.

5.10.8.3 Test procedure

5.10.8.3.1 Phase 1

Phase 1 of the temperature and high limit control test shall be conducted as follows:

(a) Set the inlet cold temperature to 10 ± 3 °C (50 ± 5°F) and the inlet hot temperature to 49 ± 3 °C (120 ± 5°F).
(b) Set the high limit control stop to a maximum of 49 °C (120°F).
(c) Verify that the specimen can control the outlet temperature to 38 °C (100°F) when starting from the cold position.
(d) With the specimen set at its full hot position, verify that the outlet temperature does not exceed 49 °C (120°F) after 1 min.

5.10.8.3.2 Phase 2

Phase 2 of the temperature and high limit control test shall be conducted as follows:

(a) Set the inlet cold temperature to 10 ± 3 °C (50 ± 5°F) and the inlet hot temperature to 82 ± 3 °C (180 ± 5°F).
(b) Set the high limit control stop to a maximum of 49 °C (120°F).
(c) Verify that the specimen can control the outlet temperature to 38 °C (100°F) when starting from the cold position.
(d) With the specimen set at its full hot position, verify that the outlet temperature does not exceed 49 °C (120°F) after 1 min.

Copyright ASME International
Provided by IHS under license with ASME
No reproduction or networking permitted without license from IHS
Not for Resale

© American Society of Mechanical Engineers
© Canadian Standards Association

5.10.8.3.3 Phase 3

Phase 3 of the temperature and high limit control test shall be conducted as follows:

(a) Set the inlet cold temperature to 27 ± 3 °C (80 ± 5°F) and the inlet hot temperature to 82 ± 3 °C (180 ± 5°F).
(b) Set the high limit control stop to a maximum of 49 °C (120°F).
(c) Verify that the specimen can control the outlet temperature to 38 °C (100°F) when starting from the cold position.
(d) With the specimen at its full hot position, verify that the outlet temperature does not exceed 49 °C (120°F) after 1 min.

5.10.8.3.4 Phase 4

Phase 4 of the temperature and high limit control test shall be conducted as follows:

(a) Set the inlet cold temperature to 27 ± 3 °C (80 ± 5°F) and the inlet hot temperature to 49 ± 3 °C (120 ± 5°F).
(b) Set the high limit control stop to a maximum of 49 °C (120°F).
(c) Verify that the specimen can control the outlet temperature to 38 °C (100°F) when starting from the cold position.
(d) With the specimen set at its full hot position, verify that the outlet temperature does not exceed 49 °C (120°F) after 1 min.

6 Markings

6.1 General

Plumbing supply fittings complying with this Standard shall be marked with the manufacturer's recognized name, trademark, or other mark or, in the case of private labelling, the name, trademark, or other mark of the customer for whom the fitting was manufactured.

The marking shall be accomplished by use of a permanent mark or by placing a permanent label on the product.

Markings on plumbing supply fittings shall be visible after installation.

6.2 Temperature identification

Single-handle, single-control, and automatic compensating mixing bath and shower valves shall have identifiable temperature control settings in which the settings are indicated by words ("cold", "warm", "hot", etc.), by numbers, or graphically.

6.3 Packaging

Packages shall be marked with the manufacturer's recognized name, trademark, or other mark as well as the model number or, in the case of private labelling, the name, trademark, or mark of the customer for whom the fitting was manufactured as well as the model number.

6.4 Instructions for automatic compensating valves

Automatic compensating valves shall be accompanied by instructions for their installation, adjustment, and servicing, which shall specify how the handle position or limit setting is to be adjusted.

Copyright ASME International
Provided by IHS under license with ASME
No reproduction or networking permitted without license from IHS
Not for Resale

© American Society of Mechanical Engineers
© Canadian Standards Association

Table 1
Minimum and maximum flow rates

(See Clauses 5.4.1 and 5.4.2.1.)

Fitting or accessory	Minimum, L/min (gpm)	Maximum, L/min (gpm)
Lavatory (other than public lavatory or metering)	—	8.3 (2.2)
Public lavatory (other than metering)	—	1.9 (0.5)
Metering	—	1.0 L/cycle (0.25 gal/cycle)
Sink	—	8.3 (2.2)
Shower head*	See Clause 4.12.1	9.5 (2.5)
Bathtub	9.0 (2.4)	—
Bidet	9.0 (2.4)	—
Service sink	15 (4.0)	—
Lawn or sediment faucet	15 (4.0)	—
Laundry tray	15 (4.0)	—
Supply stop†		
3/8 in (pipe)	21 (5.5)	—
3/8 in (compression)	15 (4.0)	—
1/2 in (pipe)	36 (9.5)	—
1/2 in (compression)	21 (5.5)	—

**Includes hand-held shower heads and body sprays. Safety shower heads shall be exempt from the maximum flow rate requirements in this Table.*
†Supply stop sizing shall be based on the nominal size for the outlet indicated in the manufacturer's literature.

--`,,```,,,,````-`-`,,`,,`,`,,`---

Copyright ASME International
Provided by IHS under license with ASME
No reproduction or networking permitted without license from IHS

Not for Resale

© American Society of Mechanical Engineers
© Canadian Standards Association

Table 2
Operating requirements

(See Clauses 4.6, 5.5.1, 5.6.1.2, 5.6.1.5, 5.6.3.3, 5.8.1.1, and 5.10.4.1.)

Valve or control	Force, N (lbf)	Torque, N•m (lbf•in)
Lawn or sediment faucet	45 (10)	1.7 (15)
Diverter	45 (10)	1.7 (15)
Self-closing valve*	45 (10)	1.7 (15)
Sink, lavatory, bath, or laundry tray fitting	45 (10)	1.7 (15)
Supply stop		
NPS-1/2 and smaller	67 (15)	1.7 (15)
Over NPS-1/2	110 (25)	2.8 (25)
Accessible design	20 (5)	—

**The specified torques and forces shall apply to the opening operation of the valves.*

Table 3
Life cycle test

(See Clauses 5.6.1.1 and 5.6.3.2.)

Fitting	Cycles
Lavatory or sink supply fitting	500 000
Bath or shower supply fitting	250 000
Laundry tub supply fitting	250 000
Lawn or sediment faucet or hydrant	150 000
Self-closing faucet*	150 000
Metering faucet*	150 000
Swing spout	50 000
Bidet fitting	50 000
Diverter (tub-to-shower, shower-to-shower, tub spout, bidet, shampoo, or in-line flow control device)	15 000
Body spray or shower head adjusting mechanism (flow or function control)	10 000
Body spray or shower head ball joint	10 000
Side spray assembly, including the diverter (pullout spout handpiece function control or multi-function aerator)	10 000
Supply stop†	2 000

**Includes electronic fittings.*
†*Supply stops integral with automatic compensating valves are not subject to the life cycle test.*

Copyright ASME International
Provided by IHS under license with ASME
No reproduction or networking permitted without license from IHS
Not for Resale

© American Society of Mechanical Engineers
© Canadian Standards Association

Table 4
Thread torque strength
(See Clause 5.7.2.)

Fitting size	Torque, N•m (lbf•ft)
NPS-3/8	43 (32)
NPS-1/2	61 (45)
NPS-3/4	88 (65)
NPS-1	129 (95)

Note: *The thread-assembling torque requirements apply only to NPT and NPSM supply connections.*

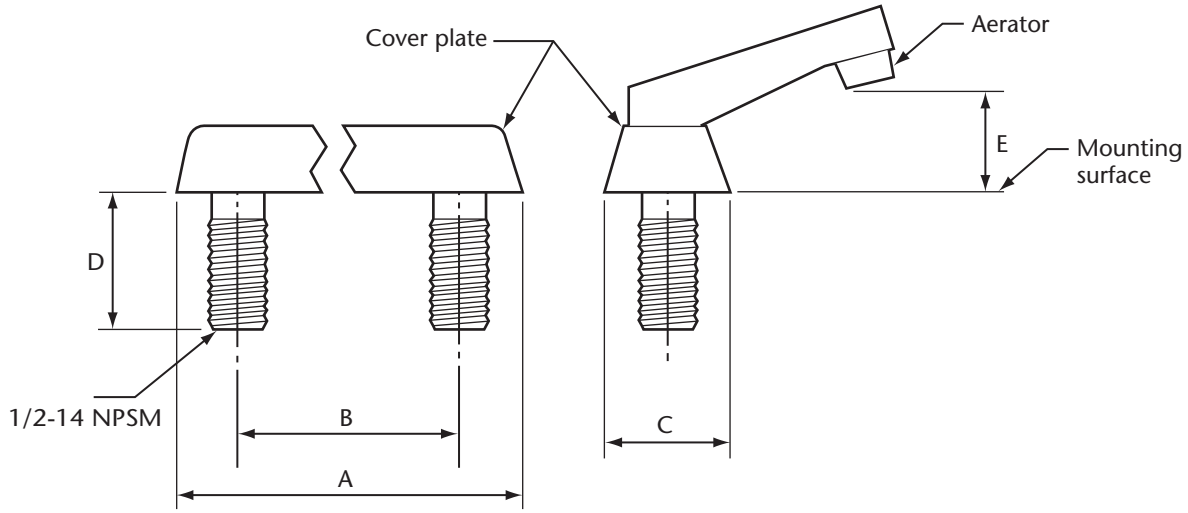

Type of fitting	A (max)	B	C (min)	D (min)	E (Air gap)
100 mm (4 in) centre set	170 mm (6.75 in)	102 ± 2 mm (4.00 ± 0.08 in)	44 mm (1.73 in)	44.5 mm (1.75 in)	See Clause 5.9.2.1
200 mm (8 in) deck fitting	285 mm (11.25 in)	204 ± 2 mm (8.00 ± 0.08 in)	44 mm (1.73 in)	44.5 mm (1.75 in)	See Clause 5.9.2.1
Single lavatory faucet	—	—	44 mm (1.73 in)	44.5 mm (1.75 in)	See Clause 5.9.2.1

Figure 1
Deck-mounted lavatory and sink supply fittings
(See Clauses 4.4.2, 4.8.1, and 5.9.2.1.)

Copyright ASME International
Provided by IHS under license with ASME
No reproduction or networking permitted without license from IHS
Not for Resale

© American Society of Mechanical Engineers
© Canadian Standards Association

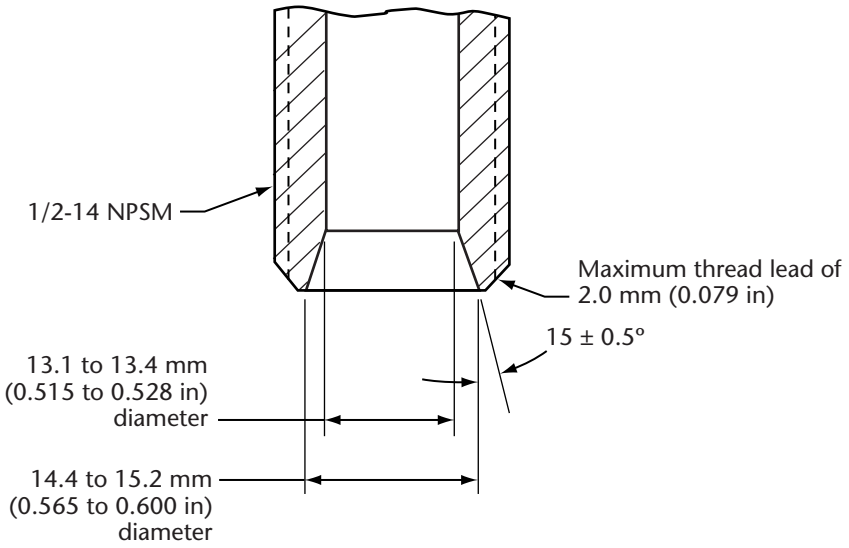

(a) Shank with coupling nut and tailpiece connection

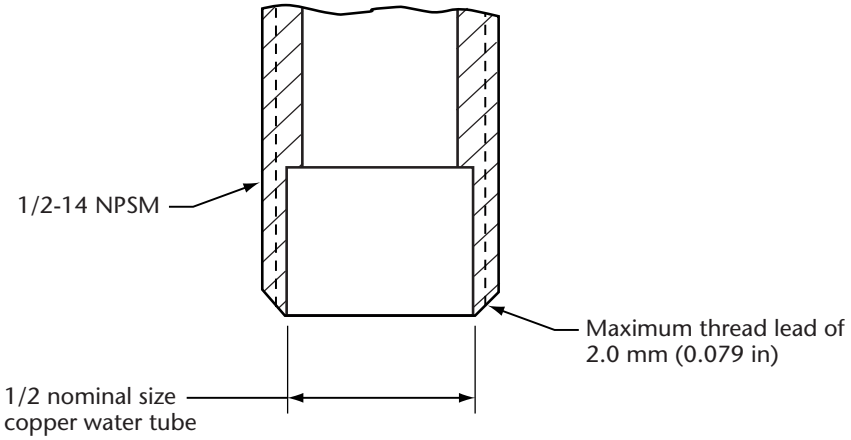

(b) Shank with 1/2 nominal size copper water tube connection

Figure 2
Dimensions for 1/2-14 NPSM shanks

(See Clause 4.4.2.)

Copyright ASME International
Provided by IHS under license with ASME
No reproduction or networking permitted without license from IHS
Not for Resale

© American Society of Mechanical Engineers
© Canadian Standards Association

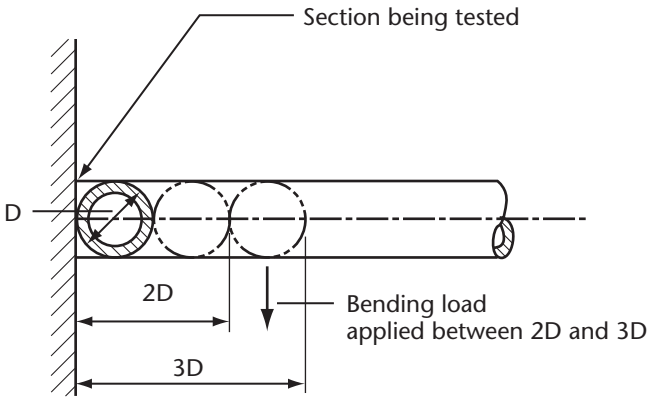

Fitting size	Metal bending moment, N•m (ft•lbf)	Plastic bending moment, N•m (ft•lbf)
NPS-3/8	40 (30)	40 (30)
NPS-1/2	60 (44)	40 (30)
NPS-3/4	80 (60)	40 (30)
NPS-1	100 (74)	40 (30)

Figure 3
Bending loads on supply fittings
(See Clause 5.7.1.2.)

Copyright ASME International
Provided by IHS under license with ASME
No reproduction or networking permitted without license from IHS
Not for Resale

© American Society of Mechanical Engineers
© Canadian Standards Association

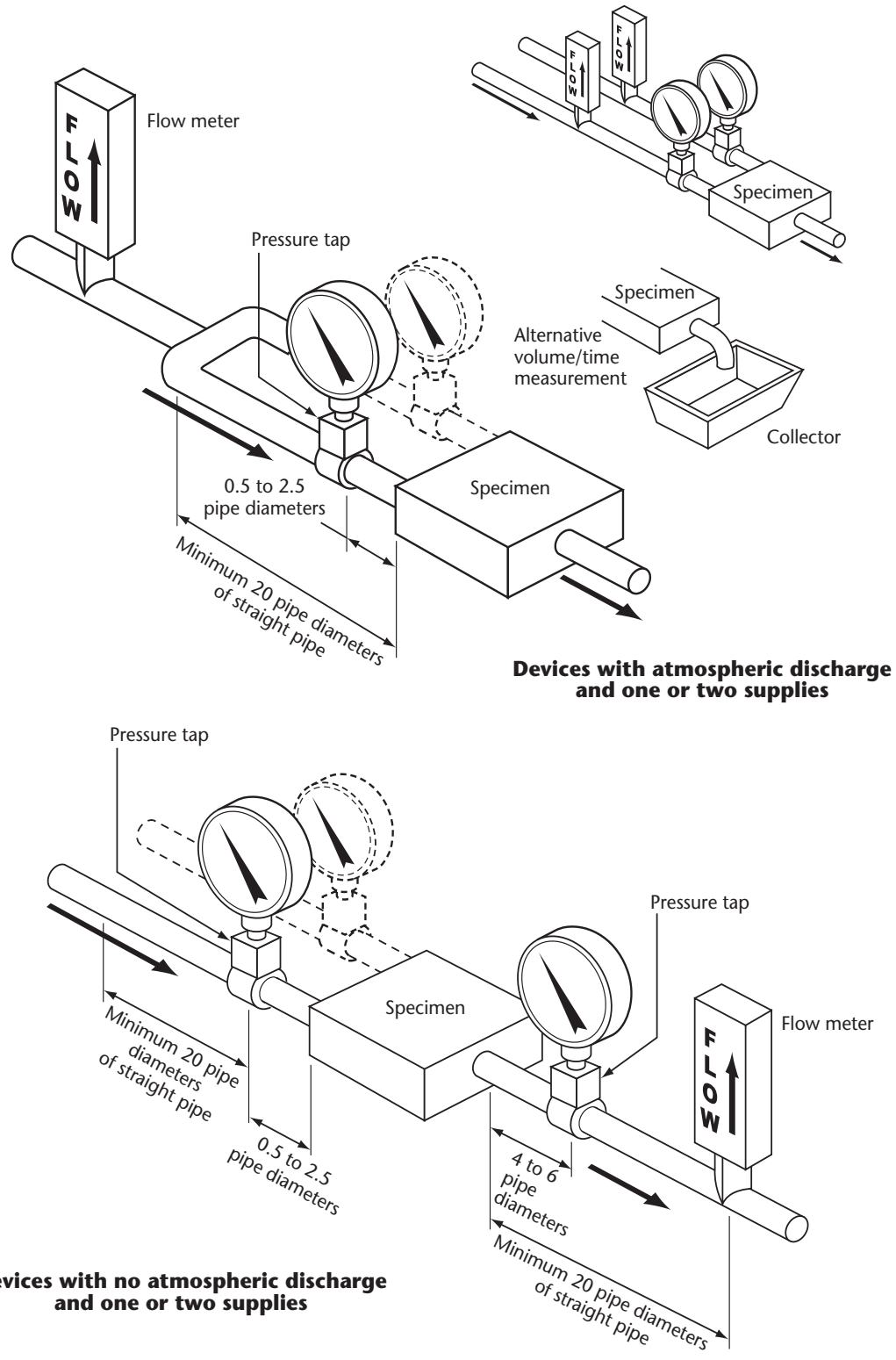

Figure 4
Discharge capacity test schematics
(See Clauses 5.4.2.1 and 5.4.2.2.)

Copyright ASME International
Provided by IHS under license with ASME
No reproduction or networking permitted without license from IHS
Not for Resale

© American Society of Mechanical Engineers
© Canadian Standards Association

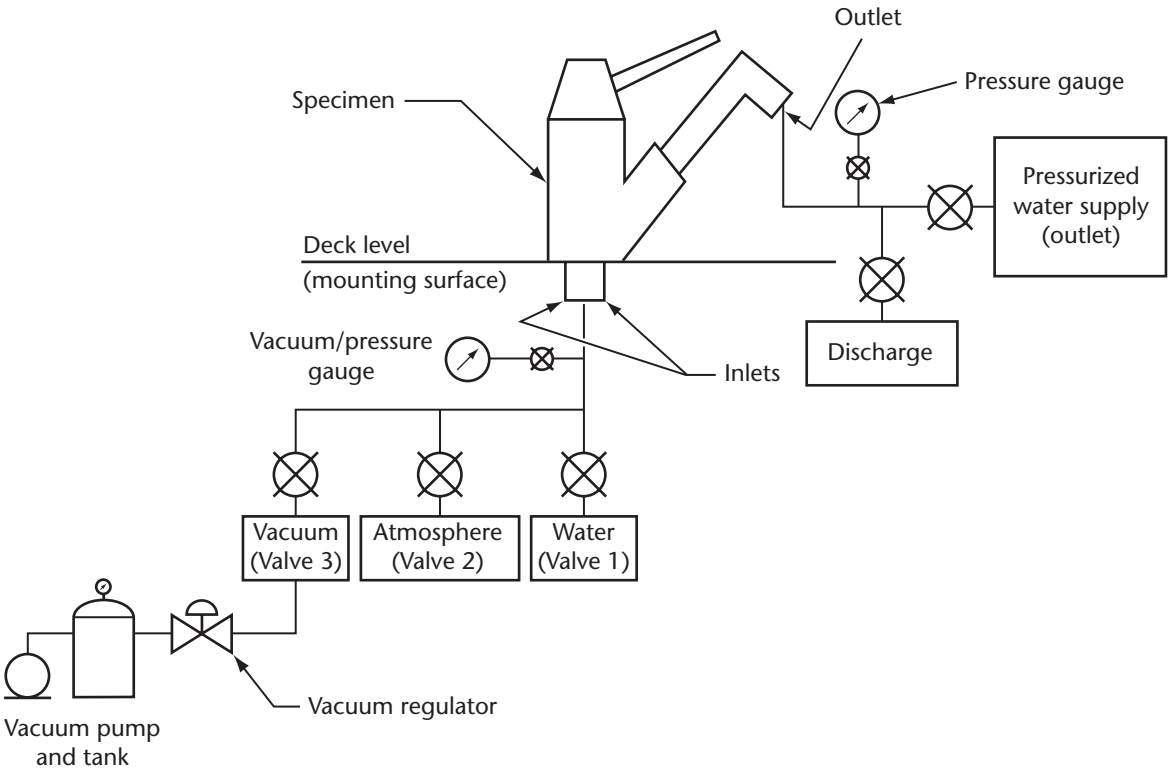

Figure 5
Set-up for check valve leakage test
(See Clauses 5.9.4.2.5 and 5.9.4.2.6.)

Copyright ASME International
Provided by IHS under license with ASME
No reproduction or networking permitted without license from IHS
Not for Resale

© American Society of Mechanical Engineers
© Canadian Standards Association

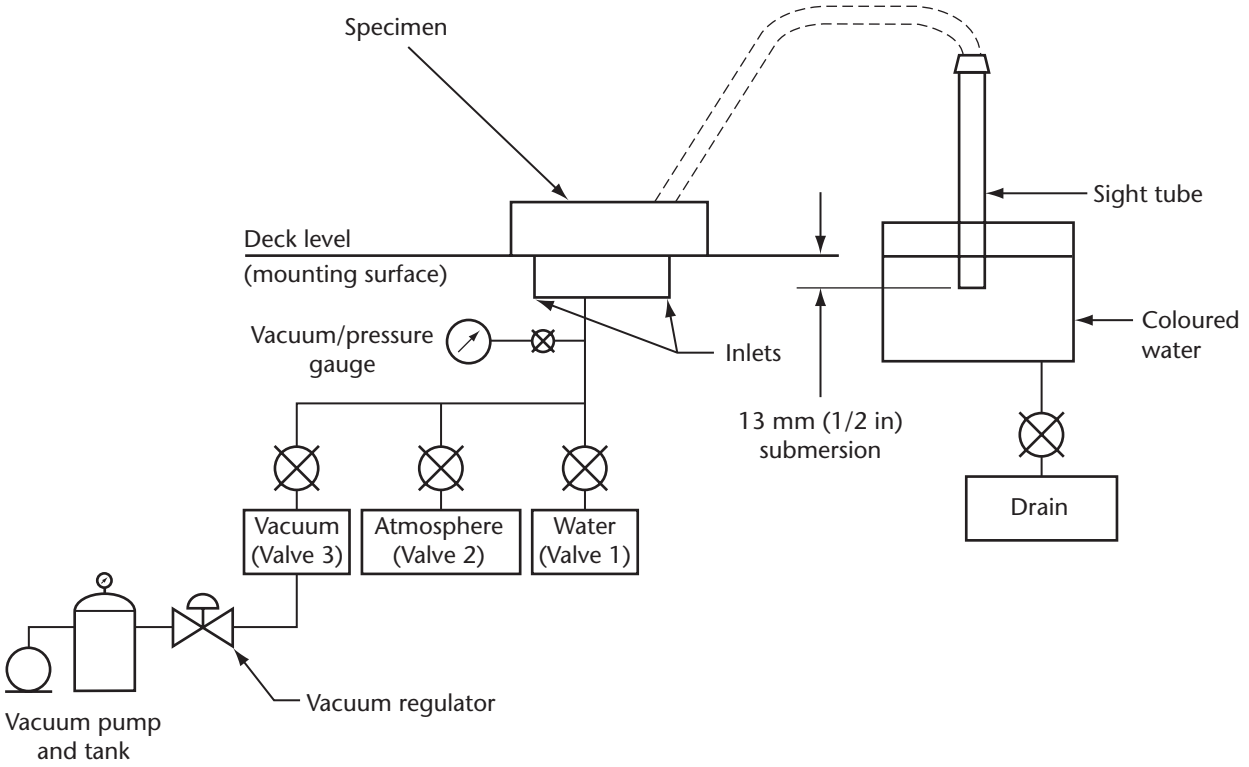

Figure 6
Set-up for back siphonage and hidden check valve test
(See Clauses 5.9.4.1.3, 5.9.4.1.4, and 5.9.5.3.)

Copyright ASME International
Provided by IHS under license with ASME
No reproduction or networking permitted without license from IHS
Not for Resale

© American Society of Mechanical Engineers
© Canadian Standards Association

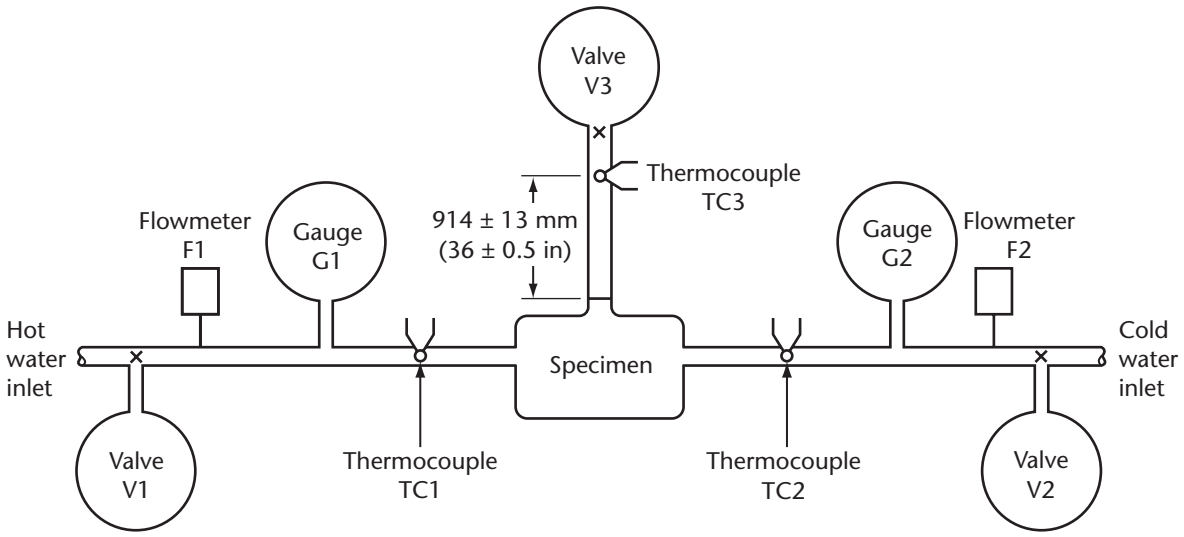

Figure 7
Set-up for high-temperature conditioning, regulation and temperature variation, and cold water supply pressure loss tests
(See Clauses 5.10.2.2, 5.10.6.1.1, 5.10.6.1.2, 5.10.6.2, 5.10.6.3.1 to 5.10.6.3.3, 5.10.7.2, and 5.10.8.2 and Figures D.1 and D.2.)

Copyright ASME International
Provided by IHS under license with ASME
No reproduction or networking permitted without license from IHS
Not for Resale

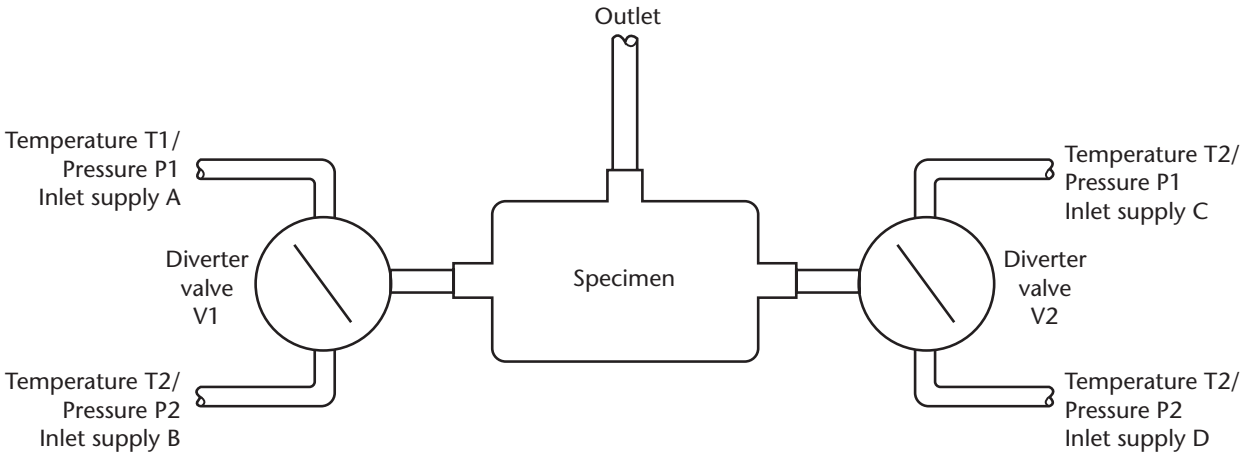

Figure 8
Set-up for life cycle test for automatic compensating valves
(See Clause 5.10.5.2.)

Copyright ASME International
Provided by IHS under license with ASME
No reproduction or networking permitted without license from IHS
Not for Resale

© American Society of Mechanical Engineers
© Canadian Standards Association

Annex A (informative)
Unit conversion criteria

Note: *This Annex is not a mandatory part of this Standard.*

A.1

The following conversion rules are used in this Standard:

(a) Zeros to the left of the first non-zero digit are not significant.

(b) If the number is greater than 1, all zeros to the right of the decimal point are significant.

(c) In multiplication and division, the original number with the smallest number of significant digits determines the number of significant digits in the product or quotient.

(d) If an exact constant is used (e.g., 3 ft = 1 yd), it does not affect the number of significant digits in the calculated value.

(e) If inexact constants are used (e.g., π = 3.1416), the constant with at least one more significant digit than the smallest number of significant digits in the original data is used.

A.2

The following rounding rules are used in this Standard:

(a) The digits that follow the last significant digit are dropped if the first digit is less than 5.

(b) If the first digit dropped is greater than 5, the preceding digit is increased by 1.

(c) If the first digit dropped is 5 and there are non-zero digits following the 5, the preceding digit is increased by 1.

(d) If the first digit dropped is 5 and there are only zeros following the 5, the digit is rounded to the even number (e.g., for three significant digits, 1.655000 becomes 1.66, 1.625000 becomes 1.62).

(e) For maximums and minimums, rounding is performed within the range of the maximum and minimum values in a way that does not violate the original limits.

Copyright ASME International
Provided by IHS under license with ASME
No reproduction or networking permitted without license from IHS
Not for Resale

© American Society of Mechanical Engineers
© Canadian Standards Association

Annex B (normative)
Tests by fitting type

Note: *This Annex is a mandatory part of this Standard.*

Table B.1
Tests by fitting type
(See Clause 5.1.3.)

Test	Clause(s)	Fitting type																
		Automatic compensating valve	Bath or shower	Bath or shower with diverter	Bidet	Bidet with diverter	Kitchen	Kitchen and lavatory side spray diverter	Kitchen and lavatory side spray function control	Laundry	Lavatory and bar	Lawn and sediment	Metering or self-closing	Shower head or body spray	Hand shower	Shower head, hand shower, or body spray adjusting mechanisms or function control	Pullout spout faucet	Supply stop
Backflow prevention	5.9		X	X	X	X	X	X		X	X	X	X		X		X	
Ball joint leakage	5.3.5													X	X			
Burst pressure	5.3.2	X	X	X	X	X	X	X		X	X	X	X				X	X
Burst pressure	5.3.4.3		X	X	X	X	X	X			X		X		X		X	
Coatings	5.2	X	X	X	X	X	X	X	X	X	X	X	X	X	X	X	X	X
Cold water supply pressure loss	5.10.7	X																
Diverter leakage	5.3.6.1			X														
Diverter leakage	5.3.6.2							X			X						X	
Drain test	4.16											X						
Flow rate	5.4		X	X	X	X	X	X		X	X	X	X	X	X	X	X	X
High-temperature conditioning	5.10.2	X																
Life cycle	5.6		X	X	X	X	X	X	X	X	X	X	X	X	X	X	X	X
Life cycle	5.6.4						X	X		X	X						X	
Life cycle	5.6.5.1							X			X				X		X	
Life cycle	5.10.5	X																
Mandrel strength	5.6.5.3							X			X				X		X	
Maximum torque	5.10.4	X																
Operating requirements	5.5	X	X	X	X	X	X	X	X	X	X	X	X	X	X	X	X	X

(Continued)

Copyright ASME International
Provided by IHS under license with ASME
No reproduction or networking permitted without license from IHS
Not for Resale

© American Society of Mechanical Engineers
© Canadian Standards Association

Table B.1 (Concluded)

Test	Clause(s)	Fitting type															
		Automatic compensating valve	Bath or shower	Bath or shower with diverter	Bidet	Bidet with diverter	Kitchen	Kitchen and lavatory side spray diverter	Kitchen and lavatory side spray function control	Laundry	Lavatory and bar	Lawn and sediment	Metering or self-closing	Shower head or body spray	Hand shower	Shower head, hand shower, or body spray adjusting mechanisms or function control	Pullout spout faucet	Supply stop
Outlet temperature control and flow rate	5.10.8	X																
Preconditioning and installation	5.1.1 and 5.1.2	X	X	X	X	X	X	X	X	X	X	X	X	X	X	X	X	X
Pressure	5.10.3	X																
Pressure and temperature — outlet blocked	5.3.1.3		X	X	X	X	X	X	X	X	X	X	X	X	X	X	X	X
Pressure and temperature — valve closed	5.3.1.2		X	X	X	X	X	X		X	X	X	X				X	X
Pullout strength	5.6.5.2							X			X				X		X	
Regulation and temperature variation	5.10.6	X																
Resistance to installation loading — bending strength	5.7.1	X	X	X	X	X	X	X		X	X	X	X				X	X
Resistance to installation loading — thread torque strength	5.7.2	X	X	X	X	X	X	X		X	X	X	X	X	X		X	X
Resistance to use loading	5.8	X	X	X	X	X	X	X		X	X	X	X				X	X
Threaded connections	4.4	X	X	X	X	X	X	X		X	X	X	X	X	X		X	X
Torque	5.3.4.2		X	X	X	X	X	X			X		X		X		X	

Note: *The tests specified in this Table are the applicable tests by fitting type. They do not need to be conducted in any particular order unless an order is specified in this Standard.*

Copyright ASME International
Provided by IHS under license with ASME
No reproduction or networking permitted without license from IHS
Not for Resale

Annex C (informative)
Verifying the time constant of the temperature-measuring equipment

Note: *This Annex is not a mandatory part of this Standard.*

C.1 General

The temperature should be recorded using a device capable of achieving a sampling rate of 200 readings per second (200 Hz). A lower sampling rate may be used; however, the data will not be as precise at a lower sampling rate.

C.2 Procedure

The procedure is as follows:

(a) Prepare the water at 88 ± 5 °C (190 ± 10°F).
(b) Set the thermocouple to 24 ± 5 °C (75 ± 10°F).
(c) Plunge the thermocouple into the water.
(d) Determine the difference between the maximum temperature (water bath) and the room temperature.
(e) Determine the time that elapsed between the thermocouple entering the hot water and the temperature reaching 63.2% of the difference determined in Item (d) or, if the recording device has not recorded a temperature value exactly equivalent to 63.2%, calculate the elapsed time based on the lower recorded value most nearly equivalent to 63.2%.

C.3 Examples (see Figure C.1)

	SI (metric)	Yard/pound
Starting temperature of the thermocouple	19.3 °C	66.7°F
Water temperature	89.4 °C	192.9°F
Step change (difference between maximum water temperature and starting temperature)	89.4 °C – 19.3 °C = 70.1 °C	192.9°F – 66.7°F = 126.2°F
63.2% of step change	0.632 × 70.1 °C = 44.3 °C	0.632 × 126.2°F = 79.8°F
Starting temperature plus 63.2% of step change temperature	19.3 °C + 44.3 °C = 63.6 °C	66.7°F + 79.8°F = 146.5°F
Time elapsed	0.14 s	0.14 s

Copyright ASME International
Provided by IHS under license with ASME
No reproduction or networking permitted without license from IHS
Not for Resale

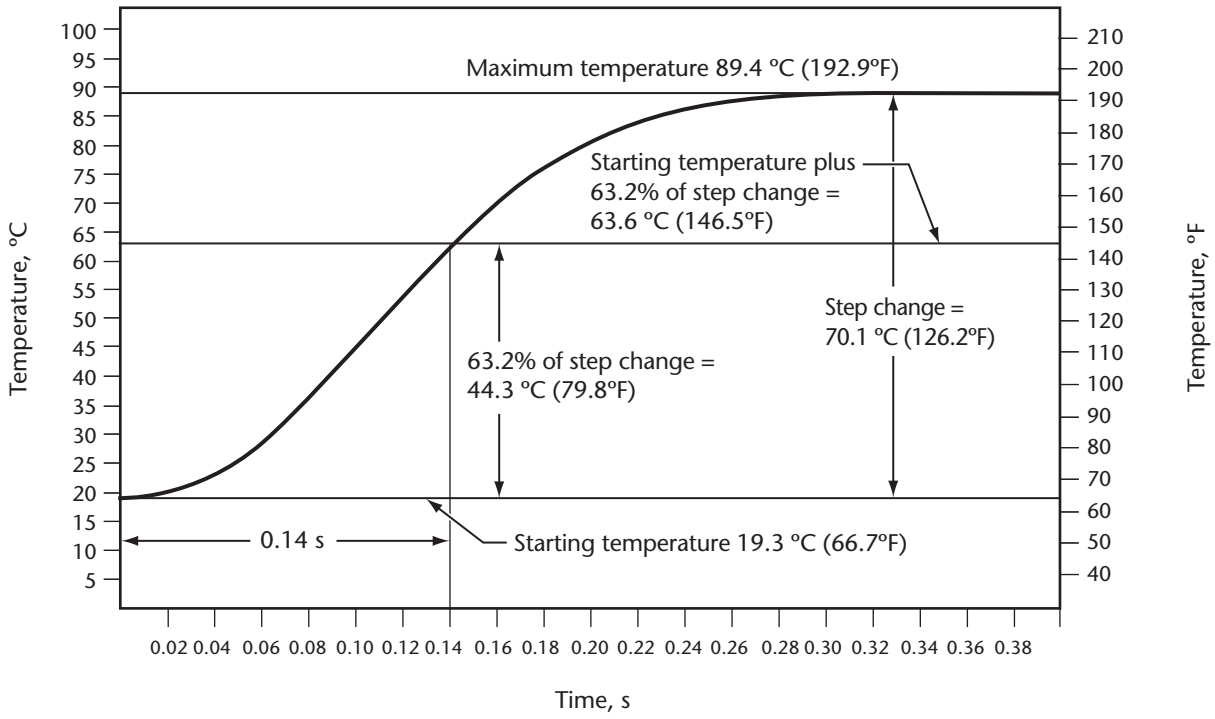

Figure C.1
Time constant graph
(See Clause C.3.)

Copyright ASME International
Provided by IHS under license with ASME
No reproduction or networking permitted without license from IHS
Not for Resale

© American Society of Mechanical Engineers
© Canadian Standards Association

Annex D (informative)
Temperature variation for pressure- and thermostatic-compensating valves

Note: *This Annex is not a mandatory part of this Standard.*

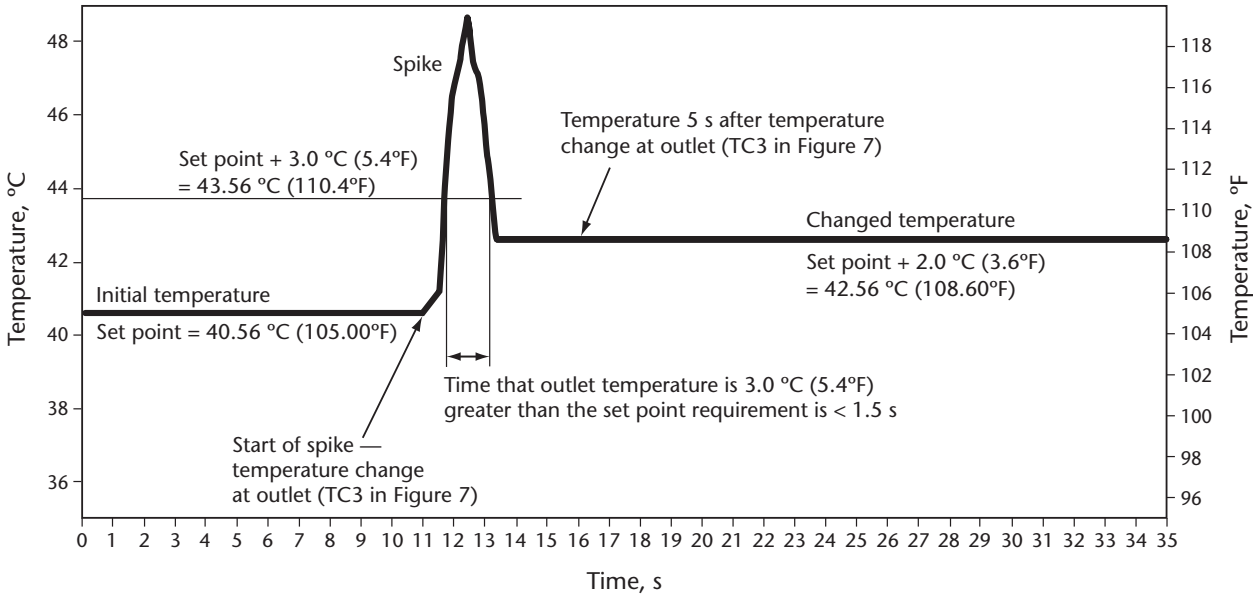

Figure D.1
Example of temperature increase spike
(See Clauses 5.10.6.1.1 and 5.10.6.1.2 and Figure 7.)

Copyright ASME International
Provided by IHS under license with ASME
No reproduction or networking permitted without license from IHS
Not for Resale

© American Society of Mechanical Engineers
© Canadian Standards Association

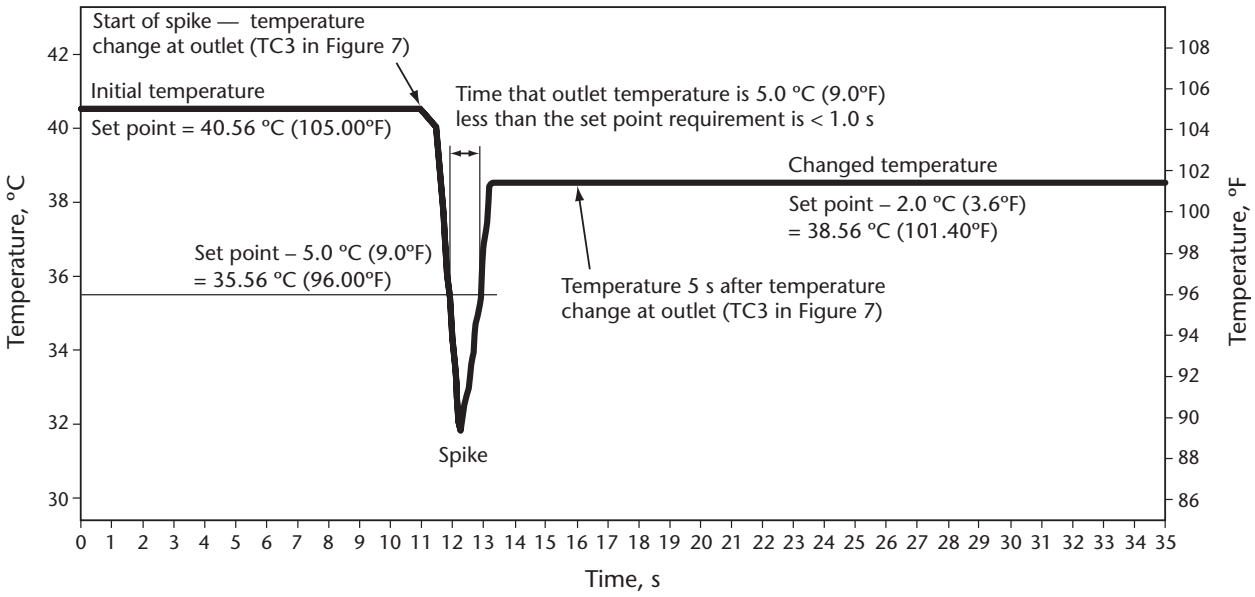

Figure D.2
Example of temperature decrease spike
(See Clauses 5.10.6.1.1 and 5.10.6.1.2 and Figure 7.)

--`,,```,,,,````-`-`,,`,,`,`,,`---

Copyright ASME International
Provided by IHS under license with ASME
No reproduction or networking permitted without license from IHS
Not for Resale

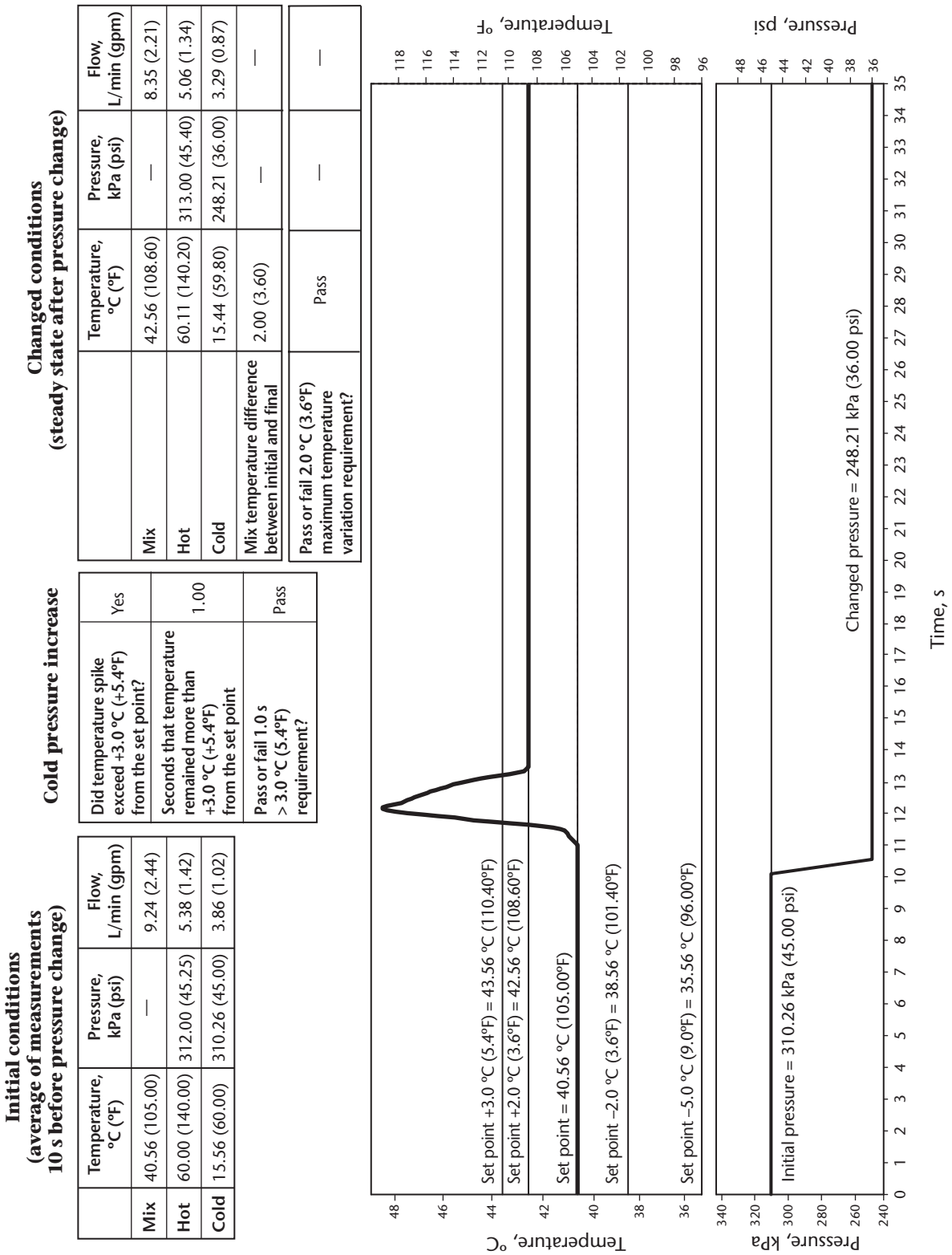

Figure D.3
Example of temperature record for temperature increase spike
(See Clause 5.10.6.2.)

Copyright ASME International
Provided by IHS under license with ASME
No reproduction or networking permitted without license from IHS
Not for Resale

© American Society of Mechanical Engineers
© Canadian Standards Association

Initial conditions (average of measurements 10 s before pressure change)

	Temperature, °C (°F)	Pressure, kPa (psi)	Flow, L/min (gpm)
Mix	40.56 (105.00)	—	9.42 (2.49)
Hot	60.00 (140.00)	312.00 (45.25)	5.56 (1.47)
Cold	15.56 (60.00)	310.26 (45.00)	3.86 (1.02)

Cold pressure increase

Did temperature spike exceed –5.0 °C (–9.0°F) from the set point?	Yes	
Seconds that temperature remained more than –5.0 °C (–9.0°F) from the set point	1.00	
Pass or fail 1.0 s < 5.0 °C (9.0°F) requirement?	Pass	

Changed conditions (steady state after pressure change)

	Temperature, °C (°F)	Pressure, kPa (psi)	Flow, L/min (gpm)
Mix	38.56 (101.40)	—	9.42 (2.49)
Hot	60.11 (140.20)	312.00 (45.25)	5.56 (1.47)
Cold	15.44 (59.80)	372.32 (54.00)	3.86 (1.02)
Mix temperature difference between initial and final	–2.00 (–3.60)	—	—
Pass or fail 2.0 °C (3.6°F) maximum temperature variation requirement?	Pass		

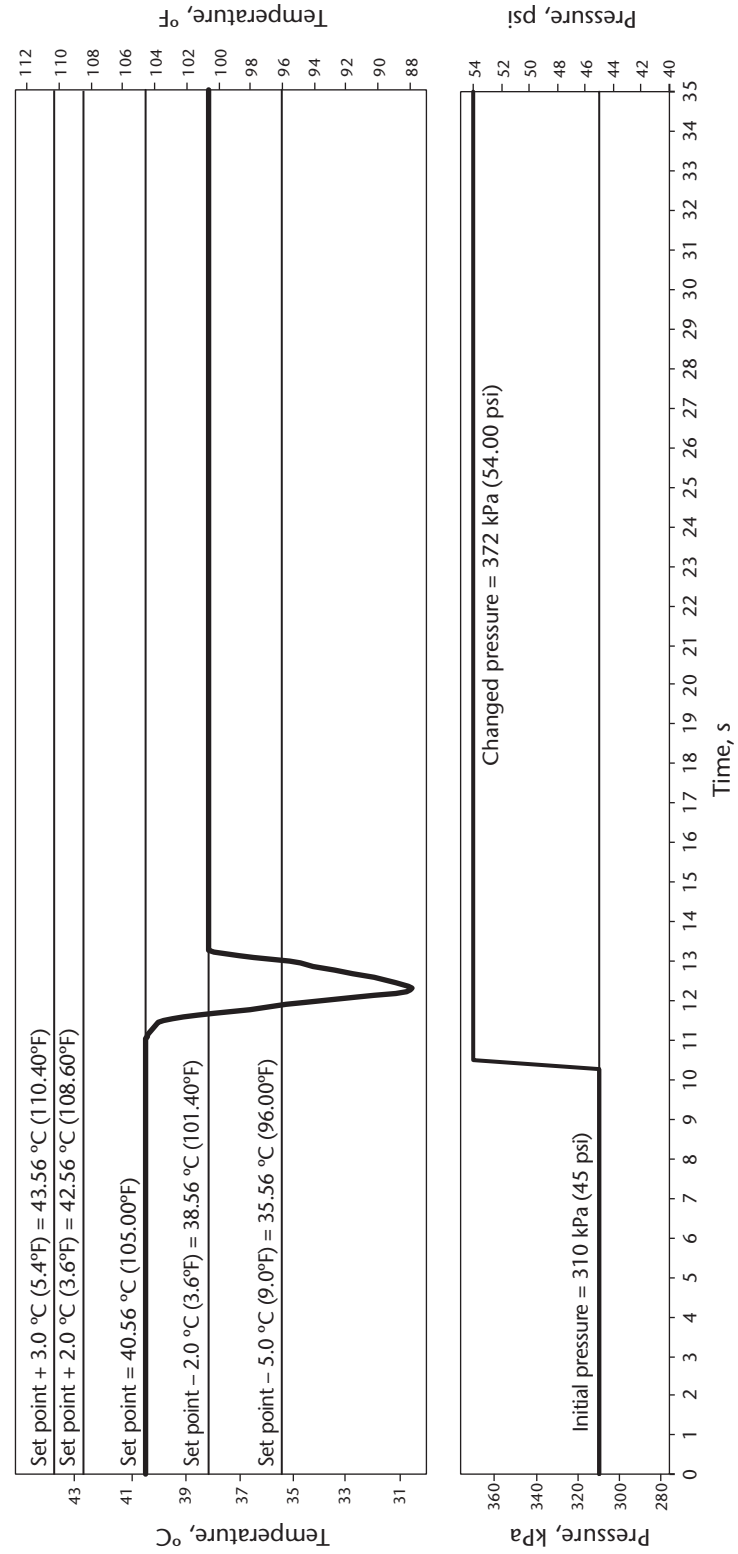

Figure D.4
Example of temperature record for temperature decrease pike
(See Clause 5.10.6.2.)

Copyright ASME International
Provided by IHS under license with ASME
No reproduction or networking permitted without license from IHS
Not for Resale

Proposition de modification

N'hésitez pas à nous faire part de vos suggestions et de vos commentaires. Au moment de soumettre des propositions de modification aux normes CSA et autres publications CSA prière de fournir les renseignements demandés ci-dessous et de formuler les propositions sur une feuille volante. Il est recommandé d'inclure

- le numéro de la norme/publication
- le numéro de l'article, du tableau ou de la figure visé
- la formulation proposée
- la raison de cette modification.

Proposal for change

CSA welcomes your suggestions and comments. To submit your proposals for changes to CSA Standards and other CSA publications, please supply the information requested below and attach your proposal for change on a separate page(s). Be sure to include the

- Standard/publication number
- relevant Clause, Table, and/or Figure number(s)
- wording of the proposed change
- rationale for the change.

Nom/Name: _____

Affiliation: _____

Adresse/Address: _____

_____

Ville/City: _____

État/Province/State: _____

Pays/Country: _____ **Code postal/Postal/Zip code:** _____

Téléphone/Telephone: _____ **Télécopieur/Fax:** _____

Date: _____

J'accepte que la CSA conserve et utilise les renseignements ci-dessus afin de faciliter la réception de mes suggestions et commentaires.

I consent to CSA collecting and using the above information to facilitate the collection of my suggestions and comments.

Consultez la politique CSA en matière de confidentialité au www.csagroup.org/legal pour savoir comment nous protégeons vos renseignements personnels.

Visit CSA's policy on privacy at www.csagroup.org/legal to find out how we protect your personal information.

Copyright ASME International
Provided by IHS under license with ASME
No reproduction or networking permitted without license from IHS
Not for Resale

--`,,```,,,,````-`-`,,`,,`,`,,`---

Copyright ASME International
Provided by IHS under license with ASME
No reproduction or networking permitted without license from IHS

Not for Resale

--`,,```,,,,````-`-`,,`,,`,`,,`---

Copyright ASME International
Provided by IHS under license with ASME
No reproduction or networking permitted without license from IHS

Not for Resale



ISBN 0-7918-2982-0 (ASME)
ISBN 1-55397-398-4 (CSA)

Copyright ASME International
Provided by IHS under license with ASME
No reproduction or networking permitted without license from IHS

Not for Resale