ASME PTC 25-2008
(Revision of ASME PTC 25-2001)

Pressure Relief Devices

Performance Test Codes

AN AMERICAN NATIONAL STANDARD



The American Society of Mechanical Engineers

ASME
SETTING THE STANDARD

Copyright ASME International
Provided by IHS under license with ASME
No reproduction or networking permitted without license from IHS

Order Number: 02005095
Sold to:LHIP CO LTD [700166107362],
2014-04-15 08:26:03 UTC

ASME PTC 25-2008
(Revision of ASME PTC 25-2001)

Pressure Relief Devices

Performance Test Codes

AN AMERICAN NATIONAL STANDARD



The American Society of Mechanical Engineers

ASME
SETTING THE STANDARD

Copyright ASME International
Provided by IHS under license with ASME
No reproduction or networking permitted without license from IHS

Order Number: 02005095
Sold to:LHIP CO LTD [700166107362],
2014-04-15 08:26:03 UTC

Date of Issuance: January 13, 2009

This Code will be revised when the Society approves the issuance of a new edition. There will be no addenda issued to this edition.

ASME issues written replies to inquiries concerning interpretations of technical aspects of this Code. Periodically certain actions of the ASME PTC 25 Committee may be published as Cases. Cases and interpretations are published on the ASME Web site under the Committee Pages at http://cstools.asme.org as they are issued.

ASME is the registered trademark of The American Society of Mechanical Engineers.

This code or standard was developed under procedures accredited as meeting the criteria for American National Standards. The Standards Committee that approved the code or standard was balanced to assure that individuals from competent and concerned interests have had an opportunity to participate. The proposed code or standard was made available for public review and comment that provides an opportunity for additional public input from industry, academia, regulatory agencies, and the public-at-large.

ASME does not "approve," "rate," or "endorse" any item, construction, proprietary device, or activity.

ASME does not take any position with respect to the validity of any patent rights asserted in connection with any items mentioned in this document and does not undertake to insure anyone utilizing a standard against liability for infringement of any applicable letters patent, nor assumes any such liability. Users of a code or standard are expressly advised that determination of the validity of any such patent rights, and the risk of infringement of such rights, is entirely their own responsibility.

Participation by federal agency representative(s) or person(s) affiliated with industry is not to be interpreted as government or industry endorsement of this code or standard.

ASME accepts responsibility for only those interpretations of this document issued in accordance with the established ASME procedures and policies, which precludes the issuance of interpretations by individuals.

No part of this document may be reproduced in any form,
in an electronic retrieval system or otherwise,
without the prior written permission of the publisher.

The American Society of Mechanical Engineers
Three Park Avenue, New York, NY 10016-5990

Copyright © 2009 by
THE AMERICAN SOCIETY OF MECHANICAL ENGINEERS
All rights reserved
Printed in U.S.A.

yright ASME International
vided by IHS under license with ASME
eproduction or networking permitted without license from IHS

Order Number: 02005095
Sold to:LHIP CO LTD [700166107362],
2014-04-15 08:26:03 UTC

CONTENTS

Notice		vi
Foreword		vii
Committee Roster		viii
Correspondence With the PTC 25 Committee		ix
Introduction		x
Part I	**General**	1
Section 1	**Object and Scope**	1
1-1	Object	1
1-2	Scope	1
1-3	Measurement Uncertainty	1
1-4	General	1
Section 2	**Definitions and Description of Terms**	3
2-1	Purpose	3
2-2	General	3
2-3	Types of Devices	3
2-4	Parts of Pressure Relief Devices	4
2-5	Dimensional Characteristics — Pressure Relief Valves	5
2-6	Dimensional Characteristics — Nonreclosing Pressure Relief Devices	7
2-7	Operational Characteristics of Pressure Relief Devices	7
2-8	Description of Terms	8
Part II	**Flow Capacity Testing**	11
Section 3	**Guiding Principles**	11
3-1	Items on Which Agreement Shall Be Reached	11
3-2	Qualification of Person Supervising the Test	11
3-3	Responsibility of Person Supervising the Test	11
3-4	Test Apparatus	11
3-5	Preliminary Tests	11
3-6	Spare Instruments	11
3-7	Calibration of Instruments	11
3-8	Metering Sections	12
3-9	Flow Resistance Test Rigs	12
3-10	Adjustments During Tests	14
3-11	Records and Test Results	14
3-12	Measurement Uncertainty	14
Section 4	**Instruments and Methods of Measurements**	15
4-1	General	15
4-2	Fluid Conditions, Test Conditions, and Instrumentation	15
4-3	Testing With Steam, Pressure Relief Device Discharging to Atmospheric Pressure	18
4-4	Testing With Gas or Air, Pressure Relief Device Discharging to Atmospheric Pressure	23
4-5	Testing With Liquids, Pressure Relief Devices Discharging to Atmospheric Pressure	24
4-6	Testing With Steam, With Back Pressure Above Atmospheric	25
4-7	Testing With Gas or Air, With Back Pressure Above Atmospheric	27
4-8	Testing With Liquids, With Back Pressure Above Atmospheric	29

Copyright ASME International
Provided by IHS under license with ASME
No reproduction or networking permitted without license from IHS

Order Number: 02005095
Sold to:LHIP CO LTD [700166107362],
2014-04-15 08:26:03 UTC

4-9	Testing With Gas or Air, Nonreclosing Pressure Relief Device Flow Resistance Method	30
4-10	Testing Nonreclosing Pressure Relief Devices to Determine a Set Pressure for Incompressible Fluids	31
Section 5	**Computation of Results**	34
5-1	Correction of Measured Variables	34
5-2	Review of Instrument Readings	34
5-3	Use of Equation Symbols	34
5-4	Density	34
5-5	Capacity Calculations	34
Section 6	**Test Summary Report Form**	48
6-1	General Instructions	48
6-2	Part I: General Information	48
6-3	Part II: Summary of Results	48
6-4	Part III: Description of Device Under Test	48
6-5	Part IV: Observed Data and Computed Results	48
6-6	Part V: Test Conditions and Corrections Agreements	48
6-7	Part VI: Test Methods and Procedures	49
6-8	Part VII: Supporting Data	49
6-9	Part VIII: Graphical Presentation of Back-Pressure Test Results	49
Part III	**In-Service and Bench Testing**	54
Section 7	**Guiding Principles**	54
7-1	Items on Which Agreement Shall Be Reached	54
7-2	Qualification of Person Conducting the Test	54
7-3	Responsibility of Person Conducting the Test	54
7-4	Test Apparatus	54
7-5	Preliminary Training	54
7-6	Spare Instruments	54
7-7	Calibration of Instruments	54
7-8	Adjustments During Test	55
7-9	Records and Test Results	55
7-10	Measurement Uncertainty	55
Section 8	**Instruments and Methods of Measurements**	56
8-1	General	56
8-2	Instrumentation	56
8-3	In-Service Testing Procedures	59
8-4	Bench Testing Procedures	61
8-5	Seat Tightness Test	61
Section 9	**Computation of Results**	62
9-1	Correction of Measured Variables	62
9-2	Review of Instrument Readings	62
9-3	Computation of Operational Characteristics	62
Section 10	**Test Summary Report Form**	63
10-1	General Instructions	63
10-2	Part I: General Information	63
10-3	Part II: Summary of Results	63
10-4	Part III: Description of Valve Under Test	63
10-5	Part IV: Observed Data and Computed Results	63
10-6	Part V: Contract and Agreed Test Conditions Corrections	63
10-7	Part VI: Test Methods and Procedures	63
10-8	Part VII: Supporting Data	63

yright ASME International
vided by IHS under license with ASME
reproduction or networking permitted without license from IHS

Order Number: 02005095
Sold to:LHIP CO LTD [700166107362],
2014-04-15 08:26:03 UTC

Figures

2-5-1	Typical Curtain Areas of Pressure Relief Valves	6
3-9-1	Recommended Arrangements for Testing Nonreclosing Pressure Relief Device Flow Resistance	13
4-2.3-1	Recommended Arrangements for Testing Devices With Atmospheric Back Pressure — Flowmeter Test Arrangement	16
4-2.10-1	Recommended Internal Contours of Nozzles, Fittings, Adapter, and Reducers Between Test Vessel and Test Device	19
4-2.10-2	Recommended Arrangements for Testing Devices With Atmospheric Back Pressure — Weighed-Condensate Test Arrangement	20
4-2.10-3	Recommended Arrangements for Testing Devices With Atmospheric Back Pressure — Weighed-Water Test Arrangement	20
4-2.10-4	Recommended Discharge Arrangements for Testing Devices With Superimposed Back Pressure	21
4-2.10-5	Recommended Arrangement for Testing Nonreclosing Pressure Relief Devices in Combination With Pressure Relief Valves	21
4-6-1	Recommended Discharge Arrangements for Testing Devices With Built-Up Back Pressure	26
4-10-1	Recommended Arrangements for Conducting Opening Test on Nonreclosing Pressure Relief Devices With Incompressible Fluids	32
8-2.2-1	Recommended Arrangement for Testing Valves With Compressible Fluids	57
8-2.2-2	Recommended Arrangement for Testing Valves With Incompressible Fluids	58
8-3.2-1	Pilot-Operated Pressure Relief Valve Field Test Accessory	60

Forms

5-5.1	Pressure Relief Device Tested With Steam and Water: Observed Data and Computed Results — Weighed-Water Method	37
5-5.2	Pressure Relief Device Tested With Steam: Observed Data and Computed Results — Flowmeter Method	38
5-5.3	Pressure Relief Device Tested With Liquids: Observed Data and Computed Results — Flowmeter Method	40
5-5.4	Pressure Relief Device Tested With Air or Gas: Observed Data and Computed Results — Flowmeter Method	41
5-5.5	Pressure Relief Device Tested With Air or Gas: Observed Data and Computed Results — Sonic-Flow Method	43
5-5.6	Pressure Relief Device Tested With Fuel Gas: Observed Data and Computed Results — Flowmeter Method	44
5-5.7	Nonreclosing Pressure Relief Device Tested With Air: Observed Data and Computed Results — Flow Resistance	46
6-5.1	Pressure and Relief Valve Performance Test Report: Steam	50
6-5.2	Pressure and Relief Valve Performance Test Report: Liquids and Water	51
6-5.3	Pressure and Relief Valve Performance Test Report: Air, Gas, or Fuel Gas	52
6-5.4	Nonreclosing Pressure Relief Device Performance Test Report: Air, Gas, or Fuel Gas	53

Mandatory Appendices

I	SI (Metric) Units and Conversion Factors	65
II	Examples of Determining Flow Rate Uncertainties	67

Nonmandatory Appendix

A	References	71

Copyright ASME International
Provided by IHS under license with ASME
No reproduction or networking permitted without license from IHS

Order Number: 02005095
Sold to:LHIP CO LTD [700166107362],
2014-04-15 08:26:03 UTC

NOTICE

All Performance Test Codes must adhere to the requirements of ASME PTC 1, General Instructions. The following information is based on that document and included here for emphasis and the convenience of the user of the Code. It is expected that the Code user is fully cognizant of Sections 1 and 3 of ASME PTC 1 and has read them prior to applying this Code.

ASME Performance Test Codes provide test procedures that yield results of the highest level of accuracy consistent with the best engineering knowledge and practice currently available. They were developed by balanced committees representing all concerned interests and specify procedures, instrumentation, equipment-operating requirements, calculation methods, and uncertainty analysis.

When tests are run in accordance with a code, the test results themselves, without adjustment for uncertainty, yield the best available indication of the actual performance of the tested equipment. ASME Performance Test Codes do not specify means to compare those results with contractual guarantees. Therefore, it is recommended that the parties to a commercial test agree before starting the test and preferably before signing the contract on the method to be used for comparing the test results with the contractual guarantees. It is beyond the scope of any code to determine or interpret how such comparisons shall be made.

yright ASME International
vided by IHS under license with ASME
eproduction or networking permitted without license from IHS

Order Number: 02005095
Sold to:LHIP CO LTD [700166107362],
2014-04-15 08:26:03 UTC

FOREWORD

In December 1948, the ASME Boiler and Pressure Vessel Committee recommended to the ASME Performance (then Power) Test Codes Committee that a code be prepared on the testing of safety and relief valves. This request resulted in the publication of the original test code for safety and relief valves (PTC 25-1958) and was applicable only to tests with atmospheric discharge. In June 1964, the ASME Performance (then Power) Test Code Committee authorized PTC Committee Number 25 on Safety and Relief Valves to prepare a single test code (PTC 25.2-1966) to cover testing of valves discharging to atmosphere, superimposed, or built-up back pressure. In March of 1971, the ASME Performance Test Codes Committee authorized PTC Committee Number 25 on Safety and Relief Valves to prepare a general revision to the test code, the result of which was PTC 25.3-1976, approved as an American National Standard on August 19, 1976.

In 1978, the ASME Board on Performance Test Codes once again authorized the PTC Committee Number 25 to prepare a general revision of the test code. This revision, PTC 25.3-1988, approved by the ASME Board on Performance Test Codes on March 14, 1988, differed from its predecessors primarily by the omission of the section concerning theoretical relieving capacity and coefficient of discharge.

In 1991, the ASME Board on Performance Test Codes revised the name of PTC Committee Number 25 to "Pressure Relief Devices" and authorized the Committee to prepare a revised test code of the same name with a scope that was extended to include a broader range of closing and nonreclosing pressure relief devices and to broaden the discussion of in-service and bench testing.

The previous edition of this Code was approved and adopted by the American National Standards Institute as meeting the criteria as an American National Standard on May 25, 2001.

This edition of the Code has been broken down into three parts. Each part's title, and Sections included within it, are as follows:

(a) Part I, "General," includes Sections 1 and 2.

(b) Part II, "Flow Capacity Testing," includes the preceding Sections 1 and 2, along with Sections 3 through 6 and appendices.

(c) Part III, "In-Service and Bench Testing," includes the preceding Sections 1 and 2, along with Sections 7 through 10 and appendices.

This Committee invites comments that will be considered for incorporation in future revisions. These should be addressed to Secretary, PTC 25 Committee, ASME, Three Park Avenue, New York, NY 10016-5990.

This 2008 edition of PTC 25 was approved by the American National Standards Institute on September 16, 2008.

Copyright ASME International
Provided by IHS under license with ASME
No reproduction or networking permitted without license from IHS

Order Number: 02005095
Sold to:LHIP CO LTD [700166107362],
2014-04-15 08:26:03 UTC

ASME PTC COMMITTEE
Performance Test Codes

(The following is the roster of the Committee at the time of approval of this Code.)

STANDARDS COMMITTEE OFFICERS

M. P. McHale, *Chair*
J. R. Friedman, *Vice Chair*
J. H. Karian, *Secretary*

STANDARDS COMMITTEE PERSONNEL

P. G. Albert, General Electric Co.
R. P. Allen, Consultant
R. L. Bannister, *Member Emeritus*, Consultant
J. M. Burns, Burns Engineering
W. C. Campbell, Southern Company Services
M. J. Dooley, Alstom Power
A. J. Egli, Alstom Power
J. R. Friedman, Siemens Power Generation, Inc.
G. J. Gerber, Consultant
P. M. Gerhart, University of Evansville
W. O. Hays, *Honorary Member*, Retired
T. C. Heil, Babcock & Wilcox Co.
R. Jorgensen, *Member Emeritus*, Consultant
J. H. Karian, The American Society of Mechanical Engineers
D. R. Keyser, Survice Engineering
S. J. Korellis, Dynegy Generation
F. H. Light, *Honorary Member*, Retired
M. P. McHale, McHale & Associates, Inc.
P. M. McHale, McHale & Associates, Inc.
J. W. Milton, Reliant Energy
G. H. Mittendorf, Jr., *Member Emeritus*, Virginia Military Institute
S. P. Nuspl, Babcock & Wilcox Co.
A. L. Plumley, Plumley Associates
R. R. Priestley, General Electric Co.
J. A. Rabensteine, Environmental Systems Corp.
J. W. Siegmund, Sheppard T. Powell Associates, LLC
J. A. Silvaggio, Jr., Turbomachinery, Inc.
R. E. Sommerlad, *Member Emeritus*, Consultant
W. G. Steele, Jr., Mississippi State University
J. C. Westcott, Mustan Corp.
W. C. Wood, Duke Power Co.
J. G. Yost, Airtricity, Inc.

PTC 25 COMMITTEE — PRESSURE RELIEF DEVICES

J. F. Ball, *Chair*, The National Board of Boiler and Pressure Vessel Inspectors
J. A. Cox, *Vice Chair*, Industrial Valve Sales and Services
S. J. Rossi, *Secretary*, The American Society of Mechanical Engineers
J. E. Britt, Fike Corp.
W. F. Hart, Furmanite America, Inc.
D. R. Keyser, Survice Engineering
B. K. Nutter, E. I. du Pont de Nemours and Co., Inc.
T. Patel, Curtiss Wright Flow Control Corp.
K. G. Roth, Continental Disc Corp.
D. J. Scallan, Freer Iron Works
Z. Wang, BS&B Safety Systems

pyright ASME International
vided by IHS under license with ASME
reproduction or networking permitted without license from IHS

Order Number: 02005095
Sold to:LHIP CO LTD [700166107362],
2014-04-15 08:26:03 UTC

CORRESPONDENCE WITH THE PTC 25 COMMITTEE

General. ASME Codes are developed and maintained with the intent to represent the consensus of concerned interests. As such, users of this Code may interact with the Committee by requesting interpretations, proposing revisions, and attending Committee meetings. Correspondence should be addressed to

Secretary, PTC 25 Committee
The American Society of Mechanical Engineers
Three Park Avenue
New York, NY 10016-5990

Proposing Revisions. Revisions are made periodically to the Code to incorporate changes that appear necessary or desirable, as demonstrated by the experience gained from the application of the Code. Approved revisions will be published periodically.

The Committee welcomes proposals for revisions to this Code. Such proposals should be as specific as possible, citing the paragraph number(s), the proposed wording, and a detailed description of the reasons for the proposal, including any pertinent documentation.

Proposing a Case. Cases may be issued for the purpose of providing alternative rules when justified, to permit early implementation of an approved revision when the need is urgent, or to provide rules not covered by existing provisions. Cases are effective immediately upon ASME approval and shall be posted on the ASME Committee Web page.

Requests for Cases shall provide a Statement of Need and Background Information. The request should identify the Code, the paragraph, figure or table number(s), and be written as a Question and Reply in the same format as existing Cases. Requests for Cases should also indicate the applicable edition(s) of the Code to which the proposed Case applies.

Interpretations. Upon request, the PTC 25 Committee will render an interpretation of any requirement of the Code. Interpretations can only be rendered in response to a written request sent to the Secretary of the PTC 25 Committee.

The request for interpretation should be clear and unambiguous. It is further recommended that the inquirer submit his/her request in the following format:

Subject:	Cite the applicable paragraph number(s) and the topic of the inquiry.
Edition:	Cite the applicable edition of the Code for which the interpretation is being requested.
Question:	Phrase the question as a request for an interpretation of a specific requirement suitable for general understanding and use, not as a request for an approval of a proprietary design or situation. The inquirer may also include any plans or drawings that are necessary to explain the question; however, they should not contain proprietary names or information.

Requests that are not in this format will be rewritten in this format by the Committee prior to being answered, which may inadvertently change the intent of the original request.

ASME procedures provide for reconsideration of any interpretation when or if additional information that might affect an interpretation is available. Further, persons aggrieved by an interpretation may appeal to the cognizant ASME Committee or Subcommittee. ASME does not "approve," "certify," "rate," or "endorse" any item, construction, proprietary device, or activity.

Attending Committee Meetings. The PTC 25 Committee regularly holds meetings, which are open to the public. Persons wishing to attend any meeting should contact the Secretary of the PTC 25 Committee.

Copyright ASME International
Provided by IHS under license with ASME
No reproduction or networking permitted without license from IHS

Order Number: 02005095
Sold to:LHIP CO LTD [700166107362],
2014-04-15 08:26:03 UTC

INTRODUCTION

This Code provides standards for conducting and reporting tests on reclosing and nonreclosing pressure relief devices normally used to terminate an abnormal internal or external rise in pressure above a predetermined design value in boilers, pressure vessels, and related piping equipment. This Code covers the methods and procedures to determine relieving capacity and additional operating characteristics that may be required for certification or other purposes by other codes. This is accomplished by dividing the Code into three parts: Part I, "General"; Part II, "Flow Capacity Testing"; and Part III, "In-Service and Bench Testing."

This Code does not necessarily cover the methods and procedures to satisfy operating and other conditions as may be required by other codes. Establishment of pressure relief device ratings and rules of safe construction do not fall within the province of this Code.

pyright ASME International
vided by IHS under license with ASME
reproduction or networking permitted without license from IHS

Order Number: 02005095
Sold to:LHIP CO LTD [700166107362],
2014-04-15 08:26:03 UTC

PRESSURE RELIEF DEVICES

PART I
GENERAL

Section 1
Object and Scope

1-1 OBJECT

The object of the test is to determine the performance of pressure relief devices. These tests determine one or more of the following:

(a) dimensional, operational, and mechanical characteristics

(b) relieving pressure

(c) relieving flow capacity at test pressure

(d) individual flow resistance

Procedures for conducting the tests, calculating the results, and making corrections are defined.

1-2 SCOPE

(a) This Code provides instructions in Part II for flow capacity testing and in Part III for in-service and bench testing. Testing of reclosing and nonreclosing pressure relief devices is conducted under various inlet and outlet conditions using steam, gases, and liquids for which valid physical properties are known.

(b) The validity of tests shall be determined in accordance to the requirements of subsection 1-3.

1-3 MEASUREMENT UNCERTAINTY

In order to qualify as a valid code test, the total uncertainties of the test, as calculated by the procedures of ASME PTC 19.1, must be equal to or less than the values of maximum acceptable uncertainty. The maximum acceptable uncertainty of the final flow measurement shall not exceed ±2.0% of the measured value. For results other than flow measurements, the maximum acceptable uncertainty shall not exceed ±0.5% of the measured value as determined in accordance with Part II or ±1.0% of the measured value as determined in accordance with Part III.

1-4 GENERAL

(a) It is assumed that the testing facility has adequate capacity and sufficient pressure to conduct the tests. However, the users of this Code are cautioned that the capacity and pressure limitations of the testing facility may restrict the determination of satisfactory operating conditions and other operational features of the pressure relief device.

(b) In addition, field installation and/or abnormal operating conditions may adversely affect the function of the pressure relief device. It is not the intent of this Code to attempt to assess the suitability or reliability of the pressure relief device under such conditions. It should also be noted that if the temperature of the medium used to test the pressure relief device differs substantially from the temperature to which the pressure relief device is subjected while in service, the functional characteristics will be different from the test pressures, i.e., opening, closing, blowdown, and bursting pressure. In this case, it is necessary to develop appropriate corrections for the pressure relief device under test to account for these differences, which is outside the scope of this Code.

(c) This Code provides recommended test procedures and instrumentation for testing devices. Other test procedures or instrumentation may be used provided they can be demonstrated as having accuracy and reliability at least equal to the requirements of this Code. If another procedure or instrumentation will be used, it is subject to written agreement by the parties to the test prior to the test.

(d) The test results shall be reported as measured and calculated. Only tests that comply fully with the mandatory requirements of this Code may be designated as tests conducted in accordance with PTC 25. References to other codes, unless otherwise indicated, refer to

Copyright ASME International
Provided by IHS under license with ASME
No reproduction or networking permitted without license from IHS

Order Number: 02005095
Sold to:LHIP CO LTD [700166107362],
2014-04-15 08:26:03 UTC

ASME Performance Test Codes. Should any specific direction in this Code, or any particular measurement, differ from those given in other ASME Performance Test Codes for similar measurements, the instructions of this Code shall prevail.

(e) The requirements of ASME PTC 1, General Instructions, shall be met.

(f) In some cases, the testing of pressure relief devices may involve the use of high-pressure and high-temperature fluid. Hazards to personnel will exist unless adequate precautionary measures are taken. Special consideration should be given to adequate design and overpressure protection to the piping system and components, safe discharge from the pressure relief devices undergoing testing, and the high noise level usually associated with the discharge of pressure relief devices. The users of this Code should consult the authority having jurisdiction over these safety matters to ensure the testing facility meets the mandatory requirements.

yright ASME International
ided by IHS under license with ASME
eproduction or networking permitted without license from IHS

Order Number: 02005095
Sold to:LHIP CO LTD [700166107362],
2014-04-15 08:26:03 UTC

Section 2
Definitions and Description of Terms

2-1 PURPOSE

The purpose of this Section is to define pressure-relief devices and their functional and operational characteristics and standardize the terminology covering such devices, their characteristics, and testing methods. It also includes a description of terms and symbols used in this Code. These definitions and terms shall take precedence should there be any discrepancy with the referenced material.

2-2 GENERAL

bench testing: testing of a pressure relief device on a test stand using an external pressure source with or without an auxiliary lift device to determine some or all of its operating characteristics.

field testing: testing of a pressure relief device installed on a system to determine some or all of its operating characteristics. It may be either of the following methods:

(a) in-place testing: testing of a pressure relief device installed on but not protecting a system, using an external pressure source, with or without an auxiliary lift device to determine some or all of its operating characteristics.

(b) in-service testing: testing of a pressure relief device installed on and protecting a system, using system pressure or an external pressure source, with or without an auxiliary lift device to determine some or all of its operating characteristics.

flow capacity testing: testing of a pressure relief device to determine its operating characteristics, including measured relieving capacity.

pressure relief device: a device designed to prevent pressure or vacuum from exceeding a predetermined value in a pressure vessel by the transfer of fluid during emergency or abnormal conditions.

2-3 TYPES OF DEVICES

2-3.1 Reclosing Pressure-Relieving Devices

pressure relief valve (PRV): a pressure relief device designed to actuate on inlet static pressure and reclose after normal conditions have been restored. It may be one of the following types and have one or more of the following design features:

(a) low-lift PRV: a pressure relief valve in which the actual discharge area is the curtain area.

(b) full-lift PRV: a pressure relief valve in which the actual discharge area is the bore area.

(c) reduced bore PRV: a pressure relief valve in which the flow path area below the seat is less than the flow area at the inlet to the valve.

(d) full-bore PRV: a pressure relief valve in which the bore area is equal to the flow area at the inlet to the valve, and there are no protrusions in the bore.

(e) direct spring-loaded PRV: a pressure relief valve in which the disk is held closed by a spring.

(f) pilot-operated PRV: a pressure relief valve in which the disk is held closed by system pressure, and the holding pressure is controlled by a pilot valve actuated by system pressure.

(g) conventional direct spring-loaded PRV: a direct spring-loaded pressure relief valve whose operational characteristics are directly affected by changes in the back pressure.

(h) balanced direct spring-loaded PRV: a direct spring-loaded pressure relief valve that incorporates means of minimizing the effect of back pressure on the operational characteristics (opening pressure, closing pressure, and relieving capacity).

(i) internal spring PRV: a direct spring-loaded pressure relief valve whose spring and all or part of the operating mechanism is exposed to the system pressure when the valve is in the closed position.

(j) temperature and pressure relief valve: a pressure relief valve that may be actuated by pressure at the valve inlet or by temperature at the valve inlet.

(k) power-actuated PRV: a pressure relief valve actuated by an externally powered control device.

relief valve: a pressure relief valve characterized by gradual opening that is generally proportional to the increase in pressure. It is normally used for incompressible fluids.

safety relief valve: a pressure relief valve characterized by rapid opening or by gradual opening that is generally proportional to the increase in pressure. It can be used for compressible or incompressible fluids.

safety valve: a pressure relief valve characterized by rapid opening and normally used to relieve compressible fluids.

2-3.2 Nonreclosing Pressure Relief Device

A pressure relief device designed to actuate and remain open after operation. A manual resetting means may be provided.

Copyright ASME International
Provided by IHS under license with ASME
No reproduction or networking permitted without license from IHS

Order Number: 02005095
Sold to:LHIP CO LTD [700166107362],
2014-04-15 08:26:03 UTC

design features: nonreclosing pressure relief devices may include one or more of the following design features:

(a) low-lift device: a device in which the actual discharge area is dependent on the lift of the disk.

(b) full-lift device: a device in which the actual discharge area is independent of the lift of the disk.

(c) reduced bore device: a device in which the flow path area below the seat is less than the flow path area of the inlet to the device.

(d) full-bore device: a device in which the flow path area below the seat is equal to the flow path area of the inlet to the device.

design types:

(a) rupture disk device: a device containing a disk that ruptures when the static differential pressure between the upstream and downstream side of the disk reaches a predetermined value. A rupture disk device includes a rupture disk and may include a rupture disk holder.

(b) pin device: a device actuated by static differential pressure or static inlet pressure and designed to function by the activation of a load-bearing section of a pin that supports a pressure-containing member. A pin is the load-bearing element of a pin device. A pin device housing is the structure that encloses the pressure-containing members. Examples of these devices include the following:

(1) breaking pin device: a device designed to function by the breakage of a load-carrying section of a pin that supports a pressure-containing member.

(2) buckling pin device: a device designed to function by the buckling of an axially loaded compressive pin that supports a pressure-containing member.

(3) shear pin device: a device designed to function by the shearing of a load-carrying member that supports a pressure-containing member.

(c) fusible plug device: a device designed to function by the yielding or melting of a plug, at a predetermined temperature, that supports a pressure-containing member or contains pressure by itself.

(d) frangible disk device: see *rupture disk device.*

(e) bursting disk device: see *rupture disk device.*

(f) direct spring-loaded device: a device actuated by static differential pressure or static inlet pressure in which the disk is held closed by a spring. Upon actuation, the disk is held open by a latching mechanism.

(g) pilot-operated device: a device in which the disk is held closed by system pressure and the holding pressure is controlled by a pilot actuated by system pressure. The pilot may consist of one of the devices listed above.

2-4 PARTS OF PRESSURE RELIEF DEVICES

adjusting ring: a ring assembled to the nozzle or guide of a direct spring valve used to control the opening characteristics and/or the reseat pressure.

adjustment screw: a screw used to adjust the set pressure or the reseat pressure of a reclosing pressure relief device.

backflow preventer: a part or feature of a pilot-operated pressure relief valve used to prevent the valve from opening and flowing backwards when the pressure at the valve outlet is greater than the pressure at the valve inlet.

bellows: a flexible, pressure-containing component of a balance direct spring valve used to prevent changes in set pressure when the valve is subjected to a superimposed back pressure or to prevent corrosion between the disk holder and guide.

blowdown ring: see *adjusting ring.*

body: a pressure-retaining or containing member of a pressure relief device that supports the parts of the valve assembly and has provision(s) for connecting to the primary and/or secondary pressure source(s).

bonnet: a component of a direct spring valve or of a pilot in a pilot-operated valve that supports the spring. It may or may not be pressure containing.

breaking pin: the load-carrying element of a breaking pin nonreclosing pressure relief device.

breaking pin housing: a pressure-retaining component that supports the breaking pin in a nonreclosing pressure relief device.

buckling pin: the load-carrying element of a buckling device.

cap: a component used to restrict access and/or protect the adjustment screw in a reclosing pressure relief device. It may or may not be a pressure-containing part.

diaphragm: a flexible metallic, plastic, or elastomer pressure-containing member of a reclosing pressure relief device used to sense pressure or provide opening or closing force.

disk: a movable component of a pressure relief device that contains the primary pressure when it rests against the nozzle.

disk holder: a movable component in a pressure relief device that contains the disk.

dome: the volume on the side of the unbalanced moving member opposite the nozzle in the main relieving valve of a pilot-operated pressure relief device.

field test: a device for in-service or bench testing of a pilot-operated pressure relief device to measure the set pressure.

gag: a device used on reclosing pressure relief devices to prevent the device from opening.

yright ASME International
ided by IHS under license with ASME
eproduction or networking permitted without license from IHS

Order Number: 02005095
Sold to:LHIP CO LTD [700166107362],
2014-04-15 08:26:03 UTC

guide: a component in a direct spring or pilot-operated pressure relief device used to control the lateral movement of the disk or disk holder.

huddling chamber: the annular pressure chamber between the nozzle exit and the disk or disk holder that produces the lifting force to obtain a pop action.

knife blade: a component with multiple blades used with reverse-acting rupture disks to cut the disk when it reverses.

lift lever: a device to apply an external force to the stem of a pressure relief valve to manually operate the valve at some pressure below the set pressure.

main relieving valve: that part of a pilot-operated pressure relief device through which the rated flow occurs during relief.

nozzle: a primary pressure-containing component in a pressure relief valve that forms a part or all of the inlet flow passage.

pilot: the pressure- or vacuum-sensing component of a pilot-operated pressure relief valve that controls the opening and closing of the main relieving valve.

piston: the moving element in the main relieving valve of a pilot-operated, piston-type pressure relief valve that contains the seat that forms the primary pressure containment zone when in contact with the nozzle.

pressure-containing member: a component that is exposed to and contains pressure.

pressure-retaining member: a component that holds pressure-containing members together but is not exposed to the pressure.

rupture disk: the pressure-containing element in a rupture disk device that is designed to burst at its rated pressure at a specified temperature.

rupture disk holder: the structure that clamps a rupture disk in position.

seat: the pressure-sealing surfaces of the fixed and moving pressure-containing components.

shear pin: the load-carrying element of a shear pin device.

spindle: A part whose axial orientation is parallel to the travel of the disk. It may be used in one or more of the following functions:

(a) assist in alignment
(b) guide disk travel
(c) transfer of internal or external forces to the seats

spring: the element in a pressure relief valve that provides the force to keep the disk on the nozzle.

spring button: see *spring step.*

spring step: a load-transferring component in a pressure relief valve that supports the spring.

spring washer: see *spring step.*

stem: see *spindle.*

vacuum support: a component of a rupture disk to prevent flexing due to upstream vacuum or downstream back pressure.

yoke: a pressure-retaining component in a pressure relief device that supports the spring in a pressure relief valve or pin in a nonreclosing device but does not enclose them from the surrounding ambient environment.

2-5 DIMENSIONAL CHARACTERISTICS — PRESSURE RELIEF VALVES

actual discharge area: the measured minimum net area that determines the flow through a valve.

bore area: the minimum cross-sectional flow area of a nozzle (see Fig. 2-5-1).

bore diameter: the minimum diameter of a nozzle.

curtain area: the area of the cylindrical or conical discharge opening between the seating surfaces created by the lift of the disk above the seat (see Fig. 2-5-1).

developed lift: the actual travel of the disk from closed position to the position reached when the valve is at flow-rating pressure.

discharge area: see *actual discharge area.*

effective discharge area: a nominal or computed area of flow through a pressure relief valve, differing from the actual discharge area, for use in recognized flow formulas to determine the capacity of a pressure relief valve.

effective seat area: a computed area for use in calculating the set pressure of a given pressure relief valve when tested using an auxiliary lift-assist device.

flow path: the three-dimensional and geometric characteristics of a device that affects the measured relieving capacity. It is defined from the cross section of the inlet to the cross section of the outlet, including all streamlines in the flow.

inlet size: the nominal pipe size of the inlet of a pressure relief valve, unless otherwise designated.

lift: the actual travel of the disk away from closed position when a valve is relieving.

nozzle area, nozzle throat area: see *bore area.*

nozzle diameter: see *bore diameter.*

orifice area: see *effective discharge area.*

outlet size: the nominal pipe size of the outlet of a pressure relief valve, unless otherwise designated.

rated lift: the design lift at which a valve attains its rated relieving capacity.

seat angle: the angle between the axis of a valve and the seating surface. A flat-seated valve has a seat angle of 90 deg.

seat area: the area determined by the seat diameter.

Copyright ASME International
Provided by IHS under license with ASME
No reproduction or networking permitted without license from IHS

Order Number: 02005095
Sold to:LHIP CO LTD [700166107362],
2014-04-15 08:26:03 UTC

Fig. 2-5-1 Typical Curtain Areas of Pressure Relief Valves

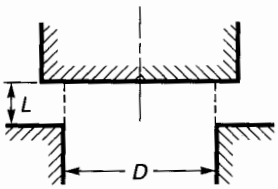

Flat-Seated Valve
Curtain area = surface of cylinder = πDL

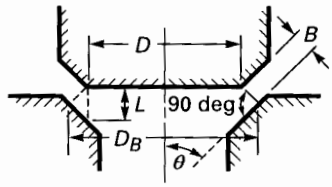

Bevel-Seated Valve
Curtain area = surface of frustum of cone = $\pi B \frac{D+D_B}{2}$

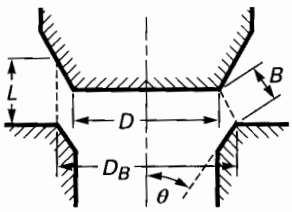

Bevel-Seated Valve
Curtain area = surface of frustum of cone = $\pi B \frac{D+D_B}{2}$

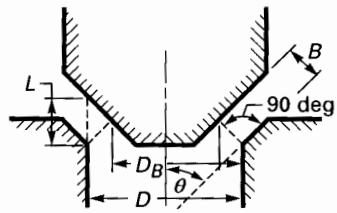

Bevel-Seated Valve
Curtain area = surface of frustum of cone = $\pi B \frac{D+D_B}{2}$

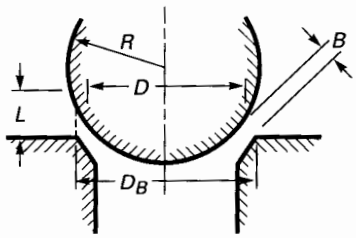

Radial-Seated Valve
Curtain area = surface of frustum of cone = $\pi B \frac{D+D_B}{2}$

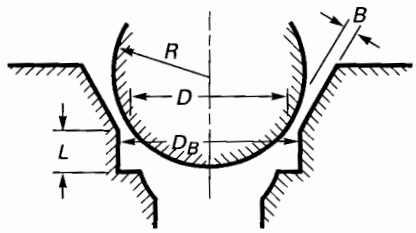

Radial-Seated Valve
Curtain area = surface of frustum of cone = $\pi B \frac{D+D_B}{2}$

B = slant height of frustum of cone
D = seat diameter = smallest diameter at which seat touches disk
D_B = other diameter of frustum of cone
L = lift
R = radius
θ = seat angle = angle of seating surface with axis of valve

GENERAL NOTE: Curtain area is the discharge area unless the disk attains sufficient lift for the valve bore to become the controlling area. See subsection 2-5, *actual discharge area, bore area,* and *curtain area.*

yright ASME International
vided by IHS under license with ASME
eproduction or networking permitted without license from IHS

Order Number: 02005095
Sold to:LHIP CO LTD [700166107362],
2014-04-15 08:26:03 UTC

seat diameter: the smallest diameter of contact between the fixed and moving portions of the pressure-containing elements of a valve.

seat flow area: see *curtain area.*

throat area: see *bore area.*

throat diameter: see *bore diameter.*

2-6 DIMENSIONAL CHARACTERISTICS — NONRECLOSING PRESSURE RELIEF DEVICES

flow path: the three-dimensional and geometric characteristics of a device that affects the measured relieving capacity. It is defined from the cross section of the inlet to the cross section of the outlet, including all streamlines in the flow.

inlet area: the cross-sectional flow area at the inlet opening of a pressure relief device.

inlet size: the nominal pipe size of the inlet of a pressure relief device, unless otherwise designated.

net flow area: the area that determines the flow after a nonreclosing pressure relief device has operated. The (minimum) net flow area of a rupture disk is the calculated net area after a complete burst of the disk, with appropriate allowance for any structural members that may reduce the net flow area through the rupture disk device.

outlet size: the nominal pipe size of the outlet passage from a pressure relief device, unless otherwise designated.

2-7 OPERATIONAL CHARACTERISTICS OF PRESSURE RELIEF DEVICES

back pressure: the static pressure existing at the outlet of a pressure relief device due to pressure in the discharge system.

blowdown: the difference between actual popping pressure of a pressure relief valve and actual reseating pressure expressed as a percentage of set pressure or in pressure units.

blowdown pressure: the value of decreasing inlet static pressure at which no further discharge is detected at the outlet of a pressure relief valve after the valve has been subjected to a pressure equal to or above the popping pressure.

breaking pressure: the value of inlet static pressure at which a breaking pin or shear pin device functions.

built-up back pressure: pressure existing at the outlet of a pressure relief device caused by the flow through that particular device into a discharge system.

burst pressure: the value of inlet static pressure at which a rupture disk device functions.

chatter: abnormal rapid reciprocating motion of the movable parts of a pressure relief valve in which the disk contacts the seat.

closing pressure: the value of decreasing inlet static pressure at which the valve disk reestablishes contact with the seat or at which lift becomes zero.

coefficient of discharge: the ratio of the measured relieving capacity to the theoretical relieving capacity.

cold differential test pressure: the inlet static pressure at which a pressure relief valve is adjusted to open on the test stand. This test pressure includes corrections for service conditions of superimposed back pressure and/or temperature.

constant back pressure: a superimposed back pressure that is constant with time.

cracking pressure: see *opening pressure.*

dynamic blowdown: the difference between the set pressure and closing pressure of a pressure relief valve when it is overpressured to the flow-rating pressure.

flow capacity: see *measured relieving capacity.*

flow-rating pressure: the inlet stagnation pressure at which the relieving capacity of a pressure relief device is measured.

flow resistance: a dimensionless term (such as used in para. 5-5.7) that expresses the number of velocity heads lost due to flow through a rupture disk device (where velocity head is one-half the velocity squared divided by the acceleration of gravity).

flutter: abnormal, rapid reciprocating motion of the movable parts of a pressure relief valve in which the disk does not contact the seat.

leak pressure: see *start-to-leak pressure.*

leak test pressure: the specified inlet static pressure at which a quantitative seat leakage test is performed in accordance with a standard procedure.

lot of rupture disks: those disks manufactured of a material at the same time and of the same size, thickness, type, heat, and manufacturing process, including heat treatment.

marked breaking pressure: the value of pressure marked on a breaking pin or a shear pin device or its nameplate.

marked burst pressure: the value of pressure marked on the rupture disk device or its nameplate or on the tag of the rupture disk, indicating the burst pressure at the coincident disk temperature.

marked relieving capacity: see *rated relieving capacity.*

marked set pressure: the value or values of pressure marked on a pressure relief device.

measured relieving capacity: the relieving capacity of a pressure relief device measured at the flow-rating pressure, expressed in gravimetric or volumetric units.

Copyright ASME International
Provided by IHS under license with ASME
No reproduction or networking permitted without license from IHS

Order Number: 02005095
Sold to:LHIP CO LTD [700166107362],
2014-04-15 08:26:03 UTC

opening pressure: the value of increasing inlet static pressure of a pressure relief valve at which there is a measurable lift or at which the discharge becomes continuous as determined by seeing, feeling, or hearing.

overpressure: a pressure increase over the set pressure of a pressure relief valve, usually expressed as a percentage of set pressure.

popping pressure: the value of increasing inlet static pressure at which the disk moves in the opening direction at a faster rate as compared with corresponding movement at higher or lower pressures.

primary pressure: the pressure at the inlet in a pressure relief device.

rated relieving capacity: that portion of the measured relieving capacity permitted by the applicable code or regulation to be used as a basis for the application of a pressure relief device.

reference conditions: those conditions of a test medium that are specified by either an applicable standard or an agreement between the parties to the test, which may be used for uniform reporting of measured flow test results.

relieving conditions: the inlet pressure and temperature on a pressure relief device during an overpressure condition. The relieving pressure is equal to the valve set pressure or burst (or the rupture disk burst pressure) plus the overpressure. (The temperature of the flowing fluid at relieving conditions may be higher or lower than the operating temperature.)

relieving pressure: set pressure plus overpressure.

resealing pressure: the value of decreasing inlet static pressure at which no further leakage is detected after closing. The method of detection may be a specified water seal on the outlet or other means appropriate for this application.

reseating pressure: see *closing pressure.*

seal-off pressure: see *resealing pressure.*

secondary pressure: the pressure existing in the passage between the actual discharge area and the valve outlet in a safety, safety relief, or relief valve.

set pressure: the value of increasing inlet static pressure at which a pressure relief device displays one of the operational characteristics as defined under opening pressure, popping pressure, start-to-leak pressure, burst pressure, or breaking pressure. (The applicable operating characteristic for a specific device design is specified by the device manufacturer.)

simmer: the audible or visible escape of fluid between the seat and disk at an inlet static pressure below the popping pressure and at no measurable capacity. It applies to safety or safety relief valves on compressible-fluid service.

specified burst pressure (of a rupture disk device): the value of increasing inlet static pressure, at a specified temperature, at which a rupture disk is designed to function.

start-to-discharge pressure: see *opening pressure.*

start-to-leak pressure: the value of increasing inlet static pressure at which the first bubble occurs when a pressure relief valve is tested by means of air under a specified water seal on the outlet.

static blowdown: the difference between the set pressure and the closing pressure of a pressure relief valve when it is not overpressured to the flow-rating pressure.

superimposed back pressure: the static pressure existing at the outlet of a pressure relief device at the time the device is required to operate. It is the result of pressure in the discharge system from other sources.

test pressure: see *relieving pressure.*

theoretical relieving capacity: the computed capacity expressed in gravimetric or volumetric units of a theoretically perfect nozzle having a minumum cross-sectional flow area equal to the actual discharge area of a pressure relief valve or net flow area of a nonreclosing pressure relief device.

vapor-tight pressure: see *resealing pressure.*

variable back pressure: a superimposed back pressure that will vary with time.

warn: see *simmer.*

yield (melt) temperature: the temperature at which the fusible material of a fusible plug device becomes sufficiently soft to extrude from its holder and relieve pressure.

2-8 DESCRIPTION OF TERMS

a = minimum net flow area, in.^{2}
a_d = actual discharge area, in.^{2}
a_m = meter-bore area, in.^{2}
C = valve inlet temperature correction
= discharge coefficient, dimensionless
C_{tap} = sonic velocity at pressure tap, ft/sec
D = test rig inside diameter, ft
= internal diameter of meter run pipe, in.
d = meter-bore diameter, in.
d_b = minimum holder bore diameter, in.
= bore diameter, in.
d_o = diameter of orifice plate, in.
d_s = seat diameter, in.
E = pipe roughness, in.
f = fanning friction factor, dimensionless
F_a = area factor for thermal expansion, dimensionless
G = mass velocity, lbm/ft^2-sec
= specific gravity with respect to dry air, M/M_a

yright ASME International
ided by IHS under license with ASME
eproduction or networking permitted without license from IHS

Order Number: 02005095
Sold to:LHIP CO LTD [700166107362],
2014-04-15 08:26:03 UTC

h_w = differential pressure at the meter, in. water
K = flow coefficient $K = \frac{c}{\sqrt{1 - \beta^4}}$
k = ratio of specific heats
$K_{A\text{-}B}$ = resistance factor between pressure taps A and B
$K_{B\text{-}C}$ = resistance factor between pressure taps B and C
$K_{B\text{-}D}$ = resistance factor between pressure taps B and D
$K_{C\text{-}D}$ = resistance factor between pressure taps C and D
K_o = trial flow coefficient
$K_{\text{pipe B-C}}$ = pipe resistance factor between pressure taps B and C without the rupture disk device
$K_{\text{pipe B-D}}$ = pipe resistance factor between pressure taps B and D without the rupture disk device
K_{Ri} = individual flow resistance
K_{tap} = total resistance factor to pressure tap
l = valve-disk lift, in.
$L_{A\text{-}B}$ = length between taps A and B, ft
$L_{B\text{-}C}$ = length between taps B and C, ft
$L_{B\text{-}D}$ = length between taps B and D, ft
$L_{C\text{-}D}$ = length between taps C and D, ft
M = molecular weight of gas
m = mass flow rate, lbm/hr
M_a = molecular weight of air
M_{tap} = Mach number at pressure tap
M_w = molecular weight
M_1 = Mach number at pipe entrance
N_{Re} = Reynolds number
P = static pressure, psia
P_B = base pressure, psia
P_b = barometric pressure, psia
P_f = flow-rating pressure, psia
P_m = static pressure at the meter calorimeter, psia
P_o = back pressure, psig
P_s = meter inlet stagnation pressure, psia
P_{set} = set pressure, psig
P_{tapA} = pressure at tap A, psia
P_{tapB} = pressure at tap B, psia
P_{tapC} = pressure at tap C, psia
P_{tapD} = pressure at tap D, psia
P_1 = pressure at pipe entrance
Q = relieving capacity in gpm of water at reference condition, U.S. gallons (gpm)
q_b = volumetric rate at base condition at the meter, cfm
q_r = valve capacity at reference inlet temperature, cfm
R = gas constant, 1,545.4/M, ft-lbf/lbm-°R
R_D = Reynolds number referred to internal diameter of meter run pipe, D
R_d = throat Reynolds number
S_g = specific gravity (ideal)
T = temperature, °R
= fluid temperature, °F
t = length of test, min
T_B = base temperature, °F
T_b = base temperature, absolute, °R
T_{cal} = fluid temperature at the calorimeter, °F
$T_{\text{cal}}{}'_{\text{drum}}$ = fluid temperature at the test drum calorimeter, °F
$T_{\text{cal, meter}}$ = fluid temperature at the meter calorimeter, °F
T_m = fluid temperature at the meter, °F
= temperature upstream of the meter, °F
T_o = base temperature, °R
T_r = reference temperature at the valve inlet, absolute, °R
T_s = meter inlet stagnation temperature, absolute, °R
T_{tap} = temperature at pressure tap, °R
T_v = fluid temperature, °F
= temperature at the valve inlet, absolute, °R
T_1 = temperature at pipe entrance
v = specific volume, ft^3/lbm
V_{act} = specific volume at inlet conditions, ft^3/lbm
$V_{\text{act}}{}'_{\text{drum}}$ = specific volume at inlet conditions, ft^3/lbm
$V_{\text{act, meter}}$ = specific volume at flowing conditions at the meter, ft^3/lbm
V_{ref} = specific volume at reference condition, ft^3/lbm
$V_{\text{ref, drum}}$ = specific volume at reference condition, ft^3/lbm
$V_{\text{ref, meter}}$ = specific volume at reference conditions at the meter, ft^3/lbm
V_{tap} = specific volume at pressure tap, ft^3/lbm
W = measured relieving capacity, lbm/sec
w = mass of water or condensate, lbm
W_c = measured relieving capacity adjusted to the reference condition, lbm/hr
$W_{\text{cal, drum}}$ = test-drum calorimeter flow adjusted to the reference condition, lbm/hr
$W_{\text{cal, meter}}$ = meter calorimeter flow adjusted to the reference condition, lbm/hr
w_{cl} = condenser leakage, lbm/hr
W_{dc} = test-drum calorimeter flow, lbm/hr
w_{dr} = test-drum drainage, lbm/hr
W_h = flow rate, lbm/hr
= measured relieving capacity adjusted to the reference condition, lbm/hr
W_{mc} = meter calorimeter flow, lbm/hr
W_r = relieving capacity adjusted to water at reference condition, lbm/hr
W_t = trial flow rate, lbm/hr

Copyright ASME International
Provided by IHS under license with ASME
No reproduction or networking permitted without license from IHS

Order Number: 02005095
Sold to:LHIP CO LTD [700166107362],
2014-04-15 08:26:03 UTC

w_{vl} = valve-steam leakage, lbm/hr
Y = expansion factor
Y_{tap} = expansion factor at pressure tap
Z = compressibility factor as defined in the equation of state, $Pv = ZRT$
Z_b = base compressibility factor
β = beta ratio ($\beta = d/D$)
ρ = fluid density, lbm/ft^3
ρ_{act} = density of water at inlet conditions, lbm/ft^3
ρ_B = density at base temperature and pressure
ρ_m = fluid density at meter inlet, lbm/ft^3
ρ_{ref} = density of water at reference condition, lbm/ft^3
ρ_s = density of dry air at 14.696 psia and at the base temperature, lbm/ft^3
ρ_{std} = density of dry air at 14.696 psia and reference temperature, lbm/ft^3 (ρ_{std})
μ = viscosity, lbm/ft-sec
= viscosity of air at T_B and T_B (centipoise)
ΔP = differential pressure head across meter, in. water
$\Delta P_{A\text{-}B}$ = differential pressure between taps A and B, psia
$\Delta P_{B\text{-}C}$ = differential pressure between taps B and C, psia
$\Delta P_{C\text{-}D}$ = differential pressure between taps C and D, psia
ϕ_i = ideal gas sonic-flow functions

yright ASME International
vided by IHS under license with ASME
eproduction or networking permitted without license from IHS

Order Number: 02005095
Sold to:LHIP CO LTD [700166107362],
2014-04-15 08:26:03 UTC

PART II
FLOW CAPACITY TESTING

Section 3
Guiding Principles

3-1 ITEMS ON WHICH AGREEMENT SHALL BE REACHED

The parties to the test shall reach agreement on the following items prior to conducting the test:

(a) object of the test

(b) parties to the test

(c) test site

(d) testing fluid reference condition at flow-rating pressure

(e) methods of measurement, instrumentation, and equipment to be used (calibration of instruments shall be in accordance with subsection 3-7)

(f) number, size, type, condition, source, set pressure, and expected relieving capacity of the device(s) to be tested

(g) person who shall supervise the test

(h) the written test procedure, which shall include the observations and readings to be taken and recorded to comply with the object or objectives of the test

3-2 QUALIFICATION OF PERSON SUPERVISING THE TEST

A person who supervises the test shall have a formal education in thermodynamics and fluid mechanics. In addition, the person shall have practical experience in fluid flow measurement and have had experience in test supervision.

3-3 RESPONSIBILITY OF PERSON SUPERVISING THE TEST

The person supervising the test shall be present at all times during the test and shall be solely responsible to ensure that all persons who are involved in taking readings, making pressure and temperature adjustments, or any other function that will affect the test results are fully informed as to the correct method of performing such functions. The person supervising the test shall also be responsible to ensure that the written test procedures are followed. The person supervising the test shall sign and date the test report, thereby verifying to the best of his knowledge that the report is correct and that the test was conducted in accordance with the written test procedures.

The person supervising the test shall be responsible for the calibration of instruments as required by subsection 3-7.

3-4 TEST APPARATUS

Procedures and arrangement of the test apparatus shall be in accordance with Section 4.

3-5 PRELIMINARY TESTS

Sufficient preliminary tests shall be conducted to ensure that test conditions can be attained and that operating personnel are completely familiar with the test equipment and their respective assignments. Preliminary tests shall include the recording of all data necessary to the completeness of an actual test.

3-6 SPARE INSTRUMENTS

If intended for use as replacements during the test, spare instruments shall be calibrated in accordance with subsection 3-7.

3-7 CALIBRATION OF INSTRUMENTS

Each instrument used during the test shall be serialized or otherwise positively identified. Each instrument, depending on the type, shall be calibrated in accordance with the following schedule outlined in this subsection. Records of pertinent instrument calibrations shall be available for review by the interested parties.

3-7.1 Pressure

Pressure-measuring instruments shall be calibrated in accordance with ASME PTC 19.2, Pressure Measurements, before and after any test or series of tests. Calibration of other means of indicating or recording pressure shall be agreed upon by the interested parties.

Copyright ASME International
Provided by IHS under license with ASME
No reproduction or networking permitted without license from IHS

Order Number: 02005095
Sold to:LHIP CO LTD [700166107362],
2014-04-15 08:26:03 UTC

3-7.2 Temperature

Temperature-measuring instruments shall be calibrated in accordance with ASME PTC 19.3, Temperature Measurement. Instruments of the types listed in para. 4-2.2(a), except bimetallic thermometers, shall be calibrated against at least one temperature within a 90-day period preceding the test or series of tests. Bimetallic thermometers shall be calibrated before and after each test or series of tests. Calibration of other means of indicating or recording temperature shall be agreed upon by the interested parties.

3-7.3 Lift Indicators and Recorders

Since these instruments are usually subjected to some shock in the course of tests under this Code, their accuracy shall be checked before and after each test or series of tests.

3-7.4 Weighing Scales

Scales used in test procedures for weighted condensate or gravimetric methods shall have a minimum value of the indicating element equal to or less than 0.25% of the expected load. Weighing scales used in tests conducted under this Code shall be calibrated at sufficient points to ensure their accuracy within their range of intended usage at least once within a 90-day period preceding a test or series of tests.

3-7.5 Steam Calorimeters

Methods of calibrating steam calorimeters are given in ASME PTC 19.11, Water and Steam in the Power Cycle. The calorimeters shall be calibrated separately with steam at the time of their installation and at regular intervals not exceeding 6 months. Further calibrations shall be carried out if results indicate an obvious error in their readings or if their installation is altered.

3-8 METERING SECTIONS

The calibration of any type of flow meter (see para. 4-2.2) shall include the actual piping and all fittings both upstream and downstream of the meter (see ASME PTC 19.5), including control valves, test vessels, and vessel-to-test device adapters. Such calibration shall be by means of measuring the flow rate through a test device with a known coefficient of discharge upon completion of the initial installation or construction and prior to the performance of any formal test. Agreement with the coefficient of the test object shall be within ±2%.

The initial calibration shall include runs at the smallest, intermediate, and highest flow rates compatible with the comparison installation. Adapter fittings for test devices having different types of inlet connections shall be calibrated by laboratory personnel at the time of their manufacture or purchase. In addition, the meter installation shall be recalibrated as above at least once within each 5-year period. These recalibrations shall include runs with at least two sizes of adapters. Records of calibrations shall be maintained and available for review by the interested parties. Modifications to the equipment shall be evaluated for the effect they may have on the system calibration, and new calibrations shall be performed if deemed necessary.

3-9 FLOW RESISTANCE TEST RIGS

The calibration of any type of test rig (see para. 4-9.1) shall include the actual piping and all fittings downstream of the test vessel (Fig. 3-9-1). Calibration shall be conducted upon completion of the initial installation or construction and prior to the performance of any formal test and be repeated at least once every 5 years. Records of calibration shall be maintained and available for review by the interested parties. Modifications to the equipment shall be evaluated for the effect they have on the test rig, and new calibrations shall be performed if deemed necessary. The calibration shall be conducted per paras. 3-9.1 and 3-9.2.

3-9.1 Measured Flow Resistance

With no test device installed, conduct three flow resistance tests at the smallest, intermediate, and highest test pressures compatible with the test rig. The measured flow resistance, K_{Ri}, for each test shall be 0 ± 0.075.

3-9.2 Pressure Tap Profile Comparison

With no test device installed, conduct a flow test at an intermediate test pressure.

(a) With the data from the flow test, calculate the average friction factor for the length of pipe between taps A-B and C-D.

(b) Using the Lapple and Levenspiel model of the adiabatic ideal-gas integration of the mechanical energy (or momentum) balance for adiabatic flow from an ideal nozzle on a large reservoir, through an equivalent length of pipe, to a second large reservoir (or to the atmosphere), calculate the equivalent pipe length to tap A using the measured flow rate, the average friction factor from step (a), and the measured pressure at tap A.

(c) Subtract the actual pipe length from the test rig entrance to tap A from the equivalent pipe length from step (b) to determine a nozzle equivalent length.

(d) Repeat steps (b) and (c) for taps B through D.

(e) Calculate the average nozzle equivalent length using the four values determined above. This average nozzle equivalent length is used to compensate for the actual pressure loss up to the test rig entrance.

(f) Using again the adiabatic ideal-gas integration model of step (b), calculate the pressure at tap A using the measured flow rate, average friction factor, and average nozzle equivalent length from step (e) and actual pipe length for tap A.

yright ASME International
ided by IHS under license with ASME
eproduction or networking permitted without license from IHS

Order Number: 02005095
Sold to:LHIP CO LTD [700166107362],
2014-04-15 08:26:03 UTC

Fig. 3-9-1 Recommended Arrangements for Testing Nonreclosing Pressure Relief Device Flow Resistance

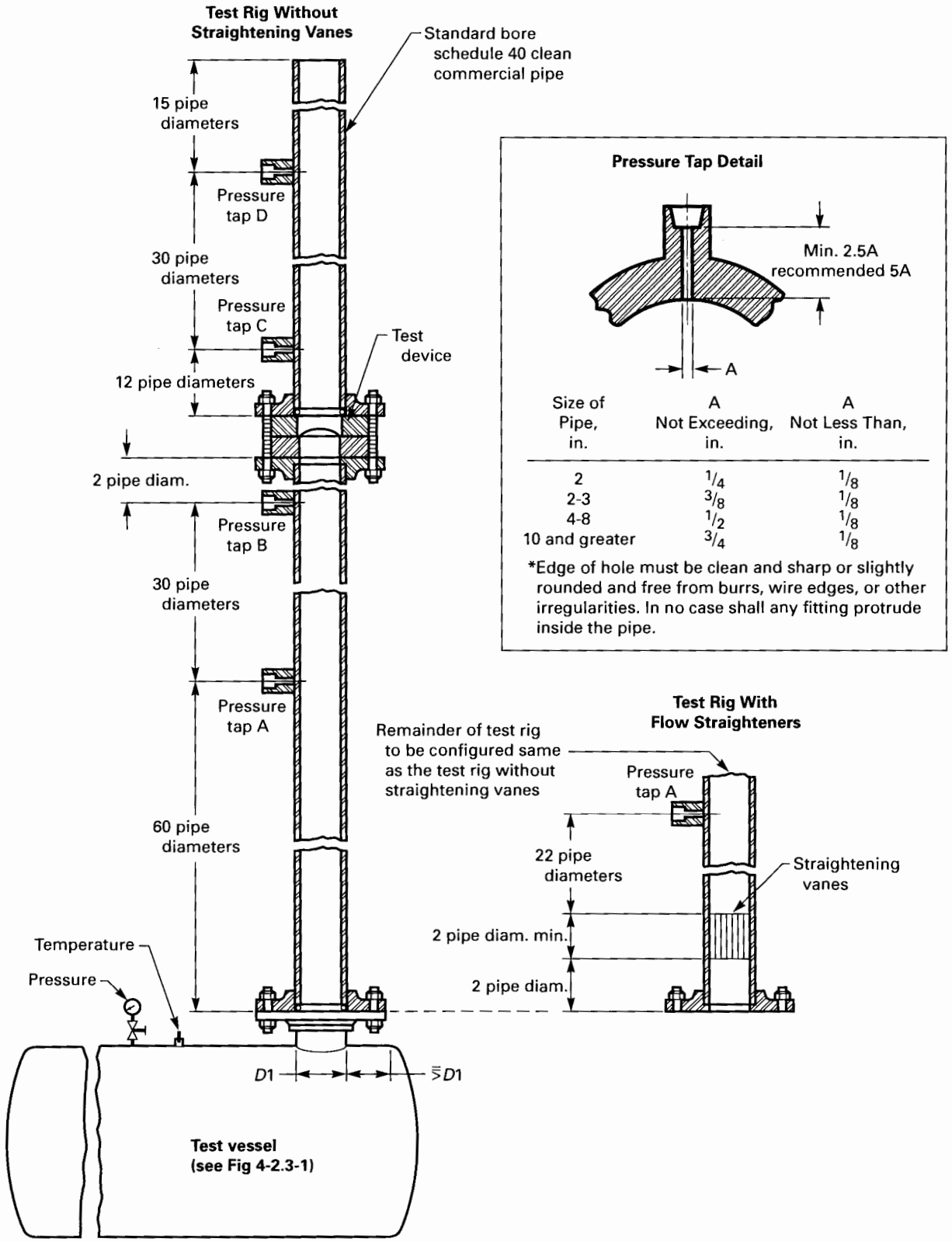

Copyright ASME International
Provided by IHS under license with ASME
No reproduction or networking permitted without license from IHS

Order Number: 02005095
Sold to:LHIP CO LTD [700166107362],
2014-04-15 08:26:03 UTC

(g) Repeat step (f) for taps B through D.

(h) Calculate the difference between the measured pressure and the calculated pressure from step (g) at each of the four pressure taps. The difference at each tap shall be within ±6.0% of the calculated pressure.

3-10 ADJUSTMENTS DURING TESTS

No adjustment to the pressure relief device shall be made while readings are being taken. Following any change or deviation of the test conditions, a sufficient period of time shall be allowed to permit the rate of flow, temperature, and pressure to reach stable conditions before readings are taken.

3-11 RECORDS AND TEST RESULTS

The test records shall include all observations, measurements, instrument readings, and instrument calibration records (if required) used in the test. Original test records shall remain in the custody of the facility that conducted the test for a period not fewer than 5 years. Copies of all test records shall be furnished to each of the parties to the test. Corrections and corrected values shall be entered separately in the test record. The test shall be reported in accordance with Section 6, Test Summary Report Form.

3-12 MEASUREMENT UNCERTAINTY

A post-test uncertainty analysis shall be performed to determine that the limits of uncertainty of the final flow measurement specified in Section 1 were met. A pretest determination may be performed to determine that the limits of uncertainty of the final flow measurement specified in Section 1 can be met by the specified instrument and procedures. A guide for such determination is given in ASME PTC 19.1. These determinations shall be documented by the laboratory and available for review.

yright ASME International
ided by IHS under license with ASME
eproduction or networking permitted without license from IHS

Order Number: 02005095
Sold to:LHIP CO LTD [700166107362],
2014-04-15 08:26:03 UTC

Section 4
Instruments and Methods of Measurements

4-1 GENERAL

This Section describes the instruments, methods, procedures, and precautions that shall be used in testing pressure relief devices under this Code. The Performance Test Code Supplements on Instruments and Apparatus provide authoritative general information concerning instruments and their use and may be consulted for such information.

4-2 FLUID CONDITIONS, TEST CONDITIONS, AND INSTRUMENTATION

4-2.1 Atmospheric Pressure

Barometric pressure shall be measured with a barometer (see ASME PTC 19.2). In calculations involving the capacity of pressure relief devices having a flow-rating pressure of 20 psig or higher, the use of the mean barometric pressure at the test site satisfies the accuracy requirements of this Code. In such cases, the recorded pressure may be the mean barometric pressure.

4-2.2 Temperature

Instructions on thermometers or thermocouples and associated instruments are given in ASME PTC 19.3, except that commercial, metal-encased thermometers shall not be used in tests conducted under this Code. Other means of temperature measurement and indication may be used, provided they are of the same or greater degree of accuracy as for those described therein.

(a) Depending on operating conditions, or convenience, the temperature may be measured with certified or calibrated liquid-in-glass thermometers, bimetallic thermometers, resistance-type thermometers, or thermocouples. All of the above may be inserted directly into the pipe or wells except for liquid-in-glass thermometers, which must be inserted into wells. The installation of the temperature-measuring device directly into the pipe, without the addition of a well, is desirable for temperatures below 300°F.

(b) The following precautions shall be taken when making any temperature measurements.

(1) No significant quantity of heat shall be transferred by radiation or conduction to or from the temperature-measuring device other than by the temperature of the medium being observed (see ASME PTC 19.3).

(2) The immediate vicinity of the point of insertion and the external projecting parts shall be insulated.

(3) The temperature-measuring device shall extend across the center line in pipes of small diameter or shall be inserted at least 6 in. into the fluid stream in pipes over 12 in. in diameter.

(4) Temperature-measuring devices installed in pipes carrying compressible fluids shall, wherever possible, be installed at locations where the maximum fluid velocity during any flow measurement does not exceed 100 ft/sec. Where such an installation is not possible, it may be necessary to correct the temperature readings to the appropriate static or total temperature (see ASME PTC 19.5).

(5) The temperature-measuring devices shall be inserted in locations so as to measure temperatures that are representative of the flowing medium as described under test arrangements.

(c) When measuring temperatures with a mercury-in-glass thermometer, the instrument shall have an etched stem. When the measured temperature differs from the ambient by more than 10°F, and the mercury is exposed, an emergent stem correction shall be made (see ASME PTC 19.3) or an appropriate emergent-stem thermometer used.

(d) Thermometer wells, when used, shall be of the type shown in ASME PTC 19.3. They shall be as thin-walled and of as small diameter as practicable; their outer surfaces shall be substantially free from corrosion or foreign matter. The well shall be filled with a suitable fluid. Mercury should not be used for this fluid since its very low vapor pressure presents a serious health hazard to personnel. However, if mercury is used for this purpose, suitable precautions must be taken.

(e) Thermocouples, if used, shall have a welded hot junction and must be calibrated together with their extension wires over the anticipated operating range. They shall be constructed of materials suitable for the temperature and fluid being measured. The electromotive force of a thermocouple shall be measured by a potentiometer instrument or millivoltmeter of such precision that the accuracy of the overall system is within the limit specified in subsection 1-3. The cold junction shall be established by an ice bath, reference standard, or by a compensating circuit built into the potentiometer.

4-2.3 Pressure Measurements

Instructions on pressure gages, differential gages, and manometers are given in ASME PTC 19.2. Other means of pressure measurements and indication may be used

Copyright ASME International
Provided by IHS under license with ASME
No reproduction or networking permitted without license from IHS

Order Number: 02005095
Sold to:LHIP CO LTD [700166107362],
2014-04-15 08:26:03 UTC

Fig. 4-2.3-1 Recommended Arrangements for Testing Devices With Atmospheric Back Pressure — Flowmeter Test Arrangement

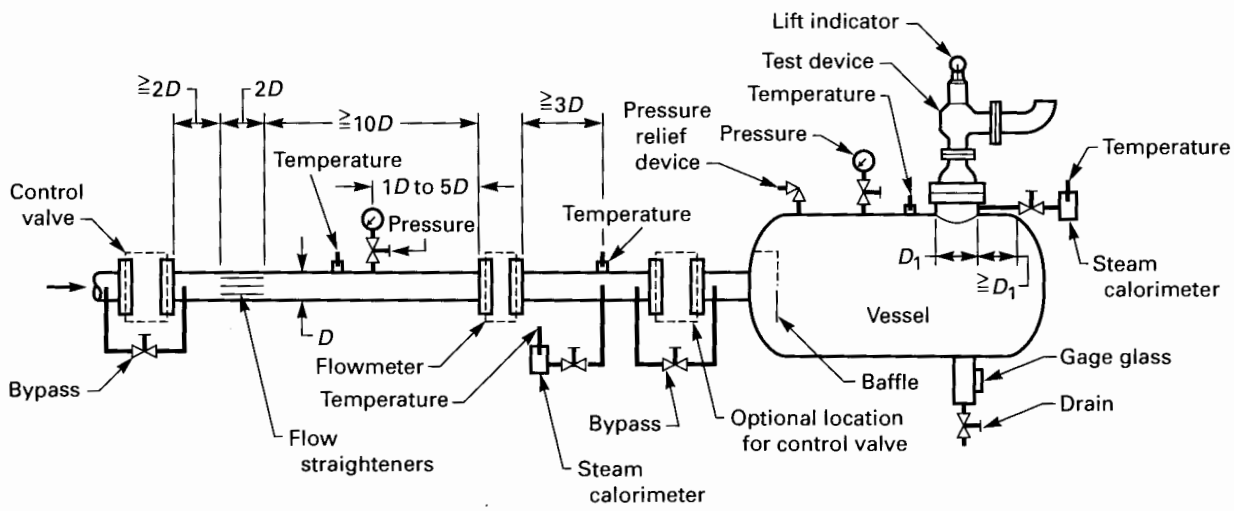

provided they are of the same or lesser degree of uncertainty as those described therein.

(a) Pressure-measuring stations shall be located in the region where the flow is essentially parallel to the pipe or vessel wall. For the measurement of static gage-pressure differentials below 15 psi, liquid manometers may be used.

(b) The test vessel pressure shall be the static pressure as measured with a pressure tap positioned, as shown in Fig. 4-2.3-1.

(c) Back pressure shall be the static pressure measured with a pressure tap positioned, five pipe diameters from the valve outlet.

(d) Proper corrections to the pressure readings shall be made if there is a height of water or other liquid between the point at which the pressure is to be measured and the pressure instrument.

4-2.4 Flow Measurement

(a) This paragraph provides for the measurement of pressure relief device capacity by use of the following methods:

(1) subsonic-inferential meters, including orifice plate, flow nozzle, and venturi

(2) sonic-inferential meters, including choked nozzles

(3) direct volumetric or gravimetric measurement of collected condensate or discharge

(b) To measure pressure relief device capacity, the following methods shall be used:

(1) steam flow, with atmospheric back pressure method (a)(1) or (3) above

(2) steam flow, with back pressure above atmospheric method (a)(1) above

(3) gas or air flow, with atmospheric back pressure method (a)(1) or (2) above

(4) gas or air flow, with back pressure above atmospheric method (a)(1) above

(5) liquid flow, with atmospheric back pressure method (a)(1) or (3) above

(6) liquid flow, with back pressure above atmospheric method (a)(1) above

NOTE: It is not the intent of the Section to exclude pressure-relief-device testing at back pressures above atmospheric wherein capacity is measured by means of a sonic inferential meter. However, due to the high degree of pressure drop through this type of meter, such testing would probably be impractical.

(c) Instruction on Primary Elements. Instructions on primary elements are given in ASME PTC 19.5. Other means of capacity determinations may be used [see para. 4-3.1(c)], provided they are of the same or greater degree of accuracy as for those outlined therein.

(1) The primary element shall be located upstream of the test pressure relief device inlet. A recommended installation arrangement is shown in Fig. 4-2.3-1. The ratio of orifice plates to internal pipe diameter shall be between 0.2 and 0.7. The primary element shall be inspected and known to be clean and free of damage prior to the test period.

(2) The differential pressure across the primary element and temperature of the fluid shall be measured. The precautions of para. 4-2.2 shall apply to the measurement of temperature and those of para. 4-2.3 to the measurement of pressure.

(3) There shall be sufficient length of straight pipe ahead of the primary element to secure a fairly uniform velocity profile in the approaching stream (see ASME PTC 19.5). To ensure reliable pressure measurement, there shall also be a sufficient length of straight pipe of the same nominal size as the inlet on the outlet side of the primary element.

yright ASME International
vided by IHS under license with ASME
reproduction or networking permitted without license from IHS

Order Number: 02005095
Sold to:LHIP CO LTD [700166107362],
2014-04-15 08:26:03 UTC

(4) The flow during capacity measurements shall be steady state, and differential pressure devices shall not show total pulsations (double amplitude) greater than 2% of the differential pressure being measured. Any greater pulsation in the flow shall be corrected at its source; attempts to reduce pulsations at the instrument are not permissible.

(5) Precautions shall be taken to avoid the use of excessively wet steam, which usually results in unstable conditions. When testing with steam, throttling calorimeters shall be used (see para. 4-2.6).

(6) ASME PTC 19.5 provides detailed information relative to most of the flow techniques and flow elements recommended for this Code. The equations for the calculation of discharge coefficients for orifices, flow nozzles, and Venturi meters contained in that document shall be used as noted below.

(a) Orifices: Flange taps (beta ratios between 0.20 and 0.75), pipe Reynolds numbers (R_D between 10^4 and 10^8)

Pipe inside diameter less than or equal to 2.308 in.:

$$C = 0.5959 + 0.0312\beta^{2.1} - 0.1840\beta^{8} + 0.039\beta^{4}/(1 - \beta^{4}) - 0.0337\beta^{3}/D + 91.71\beta^{5/2}/R_D^{3/4} \quad (1)$$

Pipe inside diameter greater than 2.308 in.:

$$C = 0.5959 + 0.0312\beta^{2.1} - 0.1840\beta^{8} + 0.0900\beta^{4}/[D(1 - \beta^{4})] - 0.0337\beta^{3}/D + 91.71\beta^{5/2}/R_D^{3/4} \quad (2)$$

D and $D/2$ taps (all pipe sizes)

$$C = 0.5959 + 0.0312\beta^{2.1} - 0.1840\beta^{8} + 0.039\beta^{4}/(1 - \beta^{4}) - 0.01584\beta^{3} + 91.71\beta^{5/2}/R_D^{3/4} \quad (3)$$

(b) Flow Nozzles: Wall taps (beta ratios between 0.2 and 0.7), throat Reynolds numbers (R_d from 1×10^4 and higher)

$$R_d < 500{,}000$$

$$C = 1 - 6.88/(R_d^{1/2}) \quad (4)$$

$$500{,}000 < R_d < 700{,}000$$

$$C = 1 - 6.88\,(R_t^{1/2})/R_d \quad (5)$$

$$R_d > 700{,}000$$

$$C = 1 - 0.185\,(1 - 361{,}200/R_d)^{4/5}\,(R_d^{-1/5}) \quad (6)$$

where

R_d = throat Reynolds number
R_t = transition Reynolds number; use 500,000

These equations are valid for uncalibrated nozzles constructed in strict accordance with PTC 19.5. Calibrated nozzles may be used to give additional accuracy. These equations include corrections to exponent signs, which will be updated in PTC 19.5 errata.

4-2.5 Valve-Lift Measurements

(a) The lift of the valve disk, under flowing conditions, shall be determined by suitable means to whatever degree of accuracy is imposed by the procedure under which the valve is being tested.

(b) In open- or vented-bonnet designs, when the top of the spindle may be exposed during the tests, a dial indicator of appropriate range may be attached to the top of the valve to indicate the movement of the spindle. In closed-bonnet valves where the top of the spindle cannot be exposed, arrangements shall be made to permit indicating, reading, or recording spindle movement outside the valve bonnet or cap. In either case, care must be exercised that the arrangement does not impose an additional load on the valve spindle or interfere with the operation of the valve.

Possible misreading of lift indicators may occur under conditions of testing valves with steam with superimposed back pressure (see subsection 4-6). When introducing steam into the back-pressure portion of the valve, the temperature of the steam may cause thermal expansion of the valve parts, producing an erroneous initial reading on the lift indicator. When extreme accuracy in results is desired, measures shall be taken to distinguish between this thermal expansion and actual valve lift.

4-2.6 Steam Quality

Quality of steam flowing shall be measured by means of throttling calorimeters, installed in the test vessel nozzle, with the tube extending to the test device centerline. Alternatively, the steam-sampling tube may be installed directly on the vessel, provided that the tube extends into the flow path directly below the center line of the device inlet nozzle and not lower than the horizontal centerline of the test vessel. Instructions for their use are given in ASME PTC 19.11.

4-2.7 Reference Conditions for Which Corrections May Be Applied

(a) Steam. The reference condition shall be dry saturated steam, and the condition of the steam during test at the device inlet shall be within limits of 98% minimum quality and 20°F maximum superheat.

(b) Water. The reference condition of water shall be between 65°F and 75°F, and the temperature limit of water during test at the device inlet shall be between 40°F and 125°F.

(c) Air and Other Gases. The reference condition of air or other gases shall be between 55°F and 75°F, and the

Copyright ASME International
Provided by IHS under license with ASME
No reproduction or networking permitted without license from IHS

Order Number: 02005095
Sold to:LHIP CO LTD [700166107362],
2014-04-15 08:26:03 UTC

temperature limit of air or other gases during test at the device inlet shall be between 0°F and 200°F.

(d) If reference conditions are not within the above stated limits, then no corrections from actual test conditions may be applied. Furthermore, no corrections shall be made from actual test pressure.

4-2.8 Specific Gravity

The specific gravity of the fluid, other than air or water, used for the test shall be determined in accordance with "Tests for Specific Gravity of Gaseous Fuels" (ASTM D 1070) or with "Density, Specific Gravity or API Gravity of Crude Petroleum and Liquid Petroleum Products by Hydrometer Method" (ASTM D 1298).

NOTE: In some special cases, it may be a requirement that tests be conducted on liquids outside the range of these specifications. In these cases, agreement shall be reached on the method of specific gravity (density — specific volume) determination.

4-2.9 Chemical Composition

If the physical properties of the fluid are in doubt (see para. 1-2.1), they shall be determined by physical tests or from chemical analysis.

4-2.10 General Features of Tests

The proper number and size of pressure relief devices to be tested shall be provided at the test site. There shall be assurance that the pressure relief devices are properly assembled with components that meet the design specification requirements. The pressure relief device shall be clean and ready for test.

The pressure relief device to be tested shall be installed with adapter fittings (flanged, screwed, welded, etc.) directly on a test vessel (see Fig. 4-2.10-1 for acceptable contours). Other adapter fittings may be used provided the accuracy of the test is not affected. The diameter and volume of the test vessel should be large enough to obtain an accurate static pressure measurement and an accurate determination of the operational characteristics of the pressure relief device to be tested. Operating conditions shall be maintained in accordance with the requirements of the procedure used (see subsections 4-3 through 4-9). The duration of the test shall be that required to obtain the necessary performance and capacity data under stable conditions.

(a) For testing with atmospheric back pressure before discharging, the test arrangement shall provide discharge from the pressure relief device directly to the atmosphere or condenser (see Figs. 4-2.3-1, 4-2.10-2, and 4-2.10-3). If discharge piping is used, it shall be at least the same size as the pressure relief device outlet. This pipe shall be supported independently of the pressure relief device and in such a way as to not affect the operation of the pressure relief device. Precautions must be taken to ensure that the pressure relief device and discharge piping are adequately secured to resist the resultant forces generated by the discharge.

(b) For testing with superimposed back pressure before discharging, the test arrangement shall provide a means for introducing and maintaining back pressure on the test pressure relief device outlet (see Fig. 4-2.10-4). The discharge pipe shall have at least the same nominal size as the pressure relief device outlet and shall discharge into a system of sufficient size to allow satisfactory back-pressure control. A control pressure relief device shall be provided to regulate the building up and maintaining of any desired back pressure while the pressure relief device is discharging.

The remainder of this Section is divided into seven parts according to the back pressure, fluid used, and type of device tested. The first three parts for tests with atmospheric back pressure before discharging are: steam (see subsection 4-3); gases, including air (see subsection 4-4); and liquids (see subsection 4-5). The second three parts for test with superimposed back pressure before discharging are: steam (see subsection 4-6); gases, including air (see subsection 4-7); and liquids (see subsection 4-8). The last part (see subsection 4-9) concerns testing rupture disks to determine resistance factors.

(c) Tests of nonreclosing pressure relief devices in combination with pressure relief valves shall be conducted in accordance with subsections 4-3 through 4-8 (see Fig. 4-2.10-5).

4-3 TESTING WITH STEAM, PRESSURE RELIEF DEVICE DISCHARGING TO ATMOSPHERIC PRESSURE

4-3.1 Test Arrangements

(a) Flowmeter Method. Figure 4-2.3-1 illustrates the use of a flowmeter together with its associated instrumentation. The use of calorimeters at the pressure relief devices inlet and primary element is mandatory; however, the thermometers at the primary element and test vessel may be omitted. Provisions shall be made for collecting and measuring the condensate accumulating in the test vessel during a test run.

(b) Weighed Condensate. Figure 4-2.10-2 illustrates the weighed-condensate method of test, including the condenser and associated instrumentation. The use of a calorimeter at the device inlet is mandatory.

NOTE: If the test pressure relief device is of the open- or vented-bonnet design, this test arrangement will not measure all the steam passing through the pressure relief device. A loss may occur due to steam leakage around the spindle and through drains. Therefore, the capacity results obtained by test will be less than the actual device capacity. When considered necessary by the interested parties, agreement shall be reached as to the method used for determining the rate of this steam leakage.

(c) Other test arrangements may be used if agreed to by all interested parties, provided the uncertainty of the final results is within ±2.0% (see subsection 1-1).

yright ASME International
vided by IHS under license with ASME
reproduction or networking permitted without license from IHS

Order Number: 02005095
Sold to:LHIP CO LTD [700166107362],
2014-04-15 08:26:03 UTC

Fig. 4-2.10-1 Recommended Internal Contours of Nozzles, Fittings, Adapter, and Reducers Between Test Vessel and Test Device

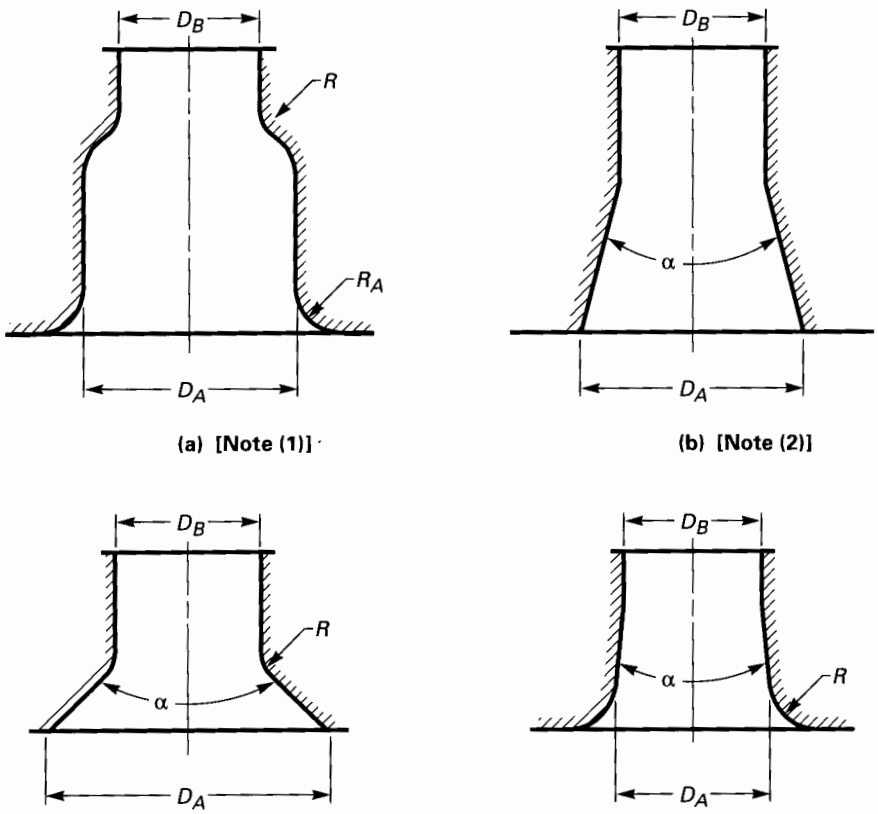

GENERAL NOTE: In no case shall the size of the fitting exceed the size of the connection on the test vessel.

NOTES:

(1) If $D_B \geq 0.75\ D_A$, then $R_A \geq 0.25\ D_A$.
If $D_B < 0.75\ D_A$, then $R \geq 0.25\ D_B$.

(2) If $\alpha \leq 30$ deg and $D_B < 0.75\ D_A$, break all edges.

(3) If $\alpha > 30$ deg and $D_B < 0.75\ D_A$, then $R \geq 0.25\ D_B$.

(4) If $\alpha \leq 30$ deg and $D_B \geq 0.75\ D_A$, then $R_A \geq 0.25\ D_A$.

Copyright ASME International
Provided by IHS under license with ASME
No reproduction or networking permitted without license from IHS

Order Number: 02005095
Sold to:LHIP CO LTD [700166107362],
2014-04-15 08:26:03 UTC

Fig. 4-2.10-2 Recommended Arrangements for Testing Devices With Atmospheric Back Pressure — Weighed-Condensate Test Arrangement

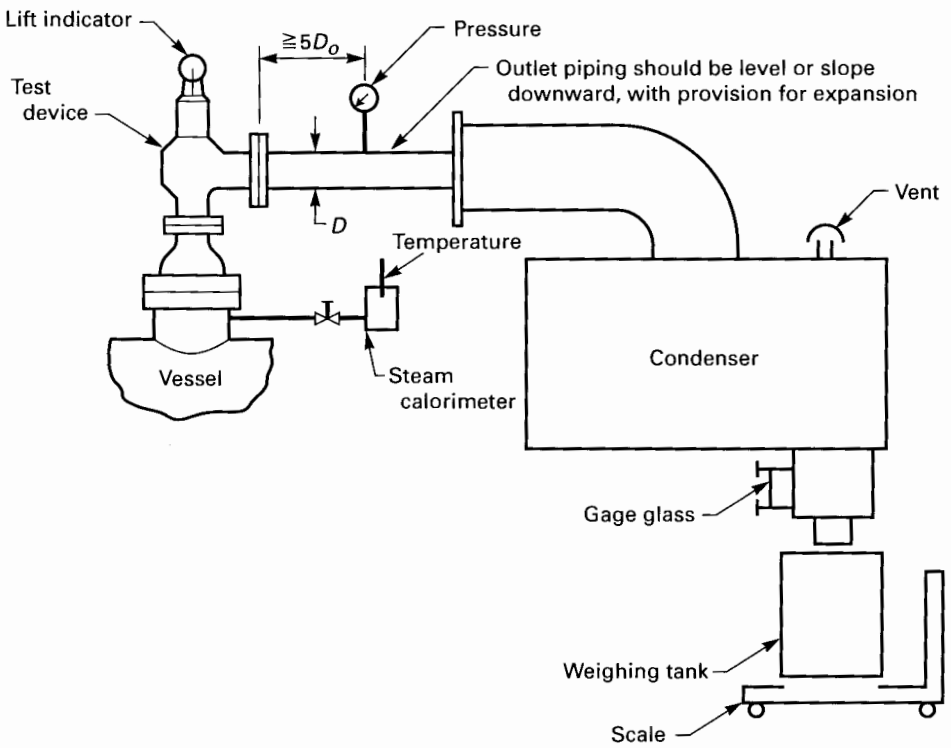

Fig. 4-2.10-3 Recommended Arrangements for Testing Devices With Atmospheric Back Pressure — Weighed-Water Test Arrangement

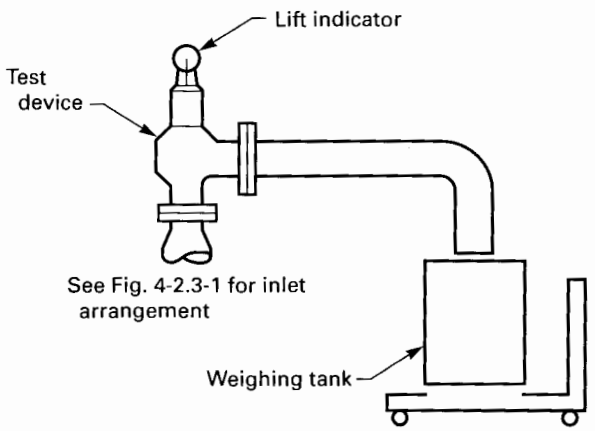

yright ASME International
vided by IHS under license with ASME
eproduction or networking permitted without license from IHS

Order Number: 02005095
Sold to:LHIP CO LTD [700166107362],
2014-04-15 08:26:03 UTC

Fig. 4-2.10-4 Recommended Discharge Arrangements for Testing Devices With Superimposed Back Pressure

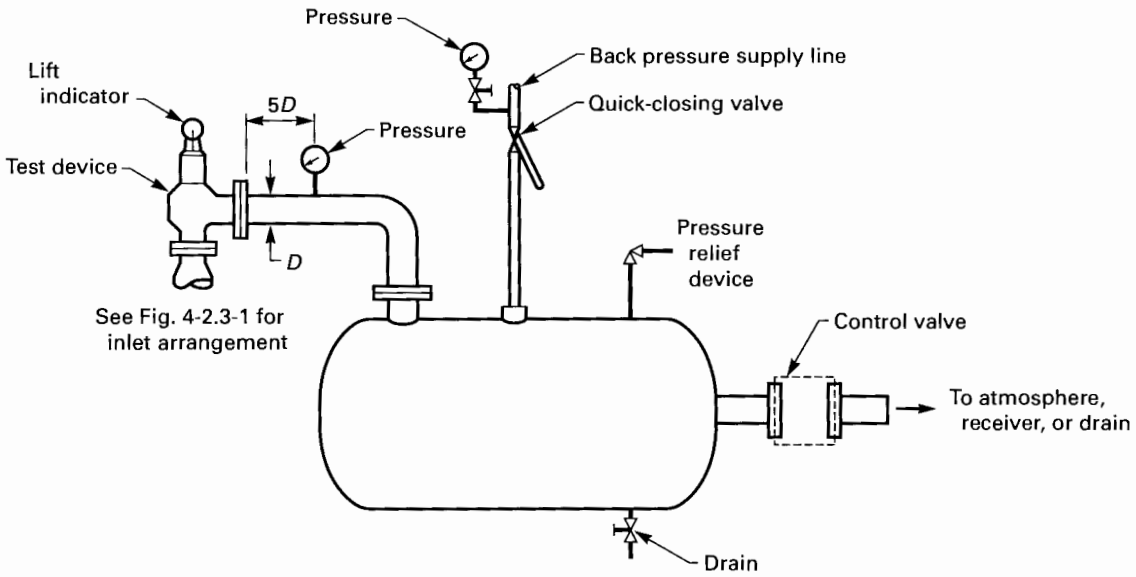

Fig. 4-2.10-5 Recommended Arrangement for Testing Nonreclosing Pressure Relief Devices in Combination With Pressure Relief Valves

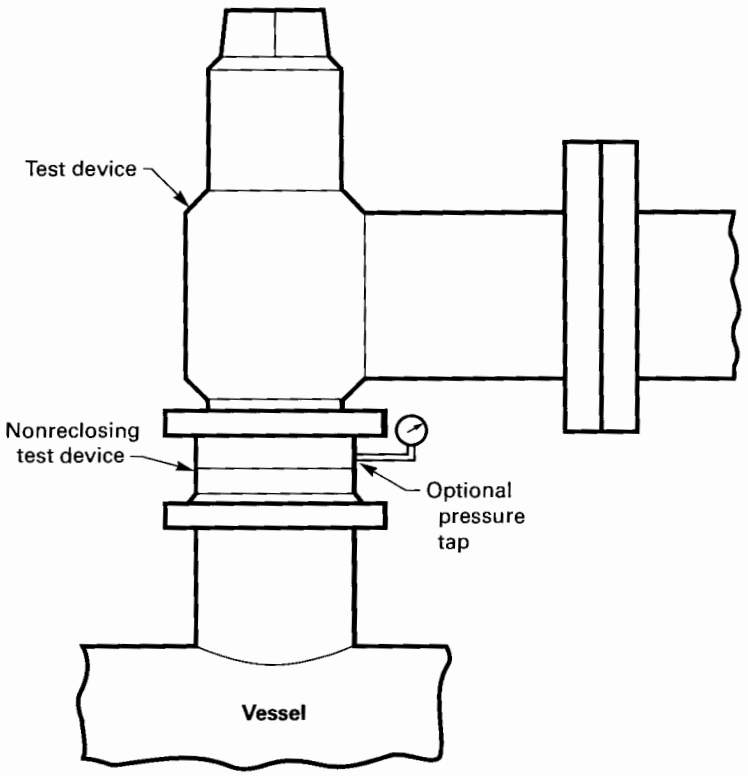

Copyright ASME International
Provided by IHS under license with ASME
No reproduction or networking permitted without license from IHS

Order Number: 02005095
Sold to:LHIP CO LTD [700166107362],
2014-04-15 08:26:03 UTC

4-3.2 Preliminary Tests

Preliminary tests may be permitted for testing and adjusting operation of the test apparatus and/or device being tested (see subsection 3-5). Such tests may be necessary to ensure the absence of leaks in the test apparatus and that primary element reservoirs are filled, properly cooled, and initially vented.

4-3.3 Barometric Pressure

Record the barometric pressure (see para. 4-2.1).

4-3.4 Details of Procedure for Flow Measurement of Devices Using the Flowmeter Method

(a) Increase the pressure at the device inlet. During the interval starting at 90% of the expected set pressure, the rate of pressure increase shall not exceed 2.0 psi/sec or whatever lesser rate of increase is necessary for the accurate reading of the pressure. Observe and record the set pressure of the device and any other desired or pertinent characteristics.

(b) For reclosing pressure relief devices, continue increasing the pressure at the device inlet until the device remains open. Observe the action of the device. Gradually decrease the inlet pressure and observe the action of the device.

(c) For reclosing pressure relief devices, repeat (a) and (b) above, recording set and reseating pressures until both are established and stabilized. These values are established by computing the average of at least the last three measured values. Set pressure and blowdown are considered stable when the measured values show no consistent upward or downward trend and all are within ±1% or ±0.5 psi, whichever is greater, of the average value. If the parties to the test agree, an alternative criteria of stability may be used.

(d) Establish and maintain the flow-rating pressure until flow instruments indicate stable condition.

(e) Close test-drum drain, and establish and record or mark starting condensate level in gage glass.

(f) Record the following:

(1) device-inlet pressure

(2) device-inlet-calorimeter-discharge temperature

(3) device-disk lift, as applicable

(4) flowmeter static pressure

(5) flowmeter differential pressure

(6) flowmeter calorimeter discharge temperature

(g) Maintain conditions stable, and read and record data in same sequence for period of run as agreed upon.

(h) Record length of run and times of recording data as measured by stopwatch, electric synchronous clock with second hand, or other appropriate means.

(i) Determine test vessel condensate by weight or volume measure, and record.

(j) Decrease inlet pressure slowly and again record reseating pressure of a reclosing pressure relief device.

4-3.5 Details of Procedure for Flow Measurement of Device Using the Weighed-Condensate Method

(a) Increase the pressure at the device inlet. During the pressure interval starting at 90% of the expected set pressure, the rate of pressure increase shall not exceed 2.0 psi/sec or whatever lesser rate of increase is necessary for the accurate reading of the pressure. Observe and record the set pressure of the device and any other desired or pertinent characteristics.

(b) For reclosing pressure relief devices, continue increasing the pressure at the device inlet until the device remains open. Observe the action of the device. Gradually decrease the inlet pressure until the valve closes. Record the reseating pressure of the valve. Observe the action of the valve.

(c) For reclosing pressure relief devices, repeat (a) and (b) above, recording set and reseating pressures until both are established and stabilized. These values are established by computing the average of at least the last three measured values. Set pressure and blowdown are considered stable when the measured values show no consistent upward or downward trend and all are within ±1% or ±0.5 psi, whichever is greater, of the average value. If the parties to the test agree, an alternative criteria of stability may be used.

(d) Establish and maintain flow-rating pressure until flow instruments indicate stable condition.

(e) Establish condenser hot-well level.

(f) Record the following:

(1) device-inlet pressure

(2) device-inlet calorimeter discharge temperature

(3) device-disk lift, as applicable

(g) Maintain conditions stable, and read and record data in same sequence for period of run as agreed upon.

(h) Record length of run and times of recording data as measured by stopwatch, electric synchronous clock with second hand, or other appropriate means.

(i) Reestablish condenser hot-well level, and accurately determine and record amount (volume or weight) of condensate formed in condensers during run.

(j) Decrease inlet pressure slowly, and again record reseating pressure of a reclosing pressure relief device.

4-3.6 Observation of the Device Mechanical Characteristics

During the flowmeter and weighed-condensate methods of test, the mechanical characteristics shall be observed by hearing, feeling, or seeing and recorded during the flow test. If the valve chatters, flutters, or does not reseat (as designed) satisfactorily, such action shall be recorded. Upon agreement of all interested parties, the device may be readjusted or repaired and retested.

4-3.7 Recording Additional Data

During the flowmeter or weighed-condensate methods of test, it may be desirable or a requirement to record

yright ASME International
rided by IHS under license with ASME
eproduction or networking permitted without license from IHS

Order Number: 02005095
Sold to:LHIP CO LTD [700166107362],
2014-04-15 08:26:03 UTC

pressure other than, or in addition to, those listed in para. 4-3.4 or 4-3.5. Where possible, such recorded pressures shall be identified in accordance with Mandatory Appendix I. With closed discharge systems, such as para. 4-3.1(b), it is not possible to observe or record some characteristic pressures.

4-4 TESTING WITH GAS OR AIR, PRESSURE RELIEF DEVICE DISCHARGING TO ATMOSPHERIC PRESSURE

4-4.1 Test Arrangement

A recommended test arrangement is shown in the flowmeter test arrangement, Fig. 4-2.3-1. The primary element shall be either a subsonic-inferential meter [para. 4-2.4(a)(1)] or a sonic-inferential meter [para. 4-2.4(a)(2)].

Instrumentation for each type of meter is listed in the following subparagraphs. The test pressure relief device discharge may be provided as shown in Fig. 4-2.3-1. Refer to para. 4-2.10(a) for long discharge connections.

(a) Subsonic-Inferential Meters. Measurements associated with subsonic-inferential meters are

(1) inlet static pressure
(2) inlet temperature
(3) differential pressure

(b) Sonic-Inferential Meters. Measurements associated with sonic-inferential meters are

(1) inlet total (stagnation) pressure
(2) inlet total (stagnation) temperature

4-4.2 Preliminary Device Tests

Preliminary tests may be permitted for testing and adjusting operation of the test apparatus and/or device being tested (see subsection 3-5). Such tests may be necessary to ensure the absence of leaks in the test apparatus.

4-4.3 Barometric Pressure

Record the barometric pressure (see para. 4-2.1).

4-4.4 Details of Procedure for Flow Measurement of Devices Using Subsonic-Inferential-Meter Method

(a) Increase the pressure at the device inlet. During the pressure interval starting at 90% of the expected set pressure, the rate of pressure increase shall not exceed 2.0 psi/sec or whatever lesser rate of increase is necessary for the accurate reading of the pressure. Observe and record the set pressure of the device and any other desired or pertinent characteristics.

(b) For reclosing pressure relief devices, continue increasing the pressure at the device inlet until the device remains open. Observe the action of the device. Gradually decrease the inlet pressure until the device closes. Record the reseating pressure of the device. Observe the action of the device.

(c) For reclosing pressure relief devices, repeat (a) and (b) above, recording set and reseating pressure until both are established and stabilized. These values are established by computing the average of at least the last three measured values. Set pressure and blowdown are considered stable when the measured values show no consistent upward or downward trend and all are within ±1% or ±0.5 psi, whichever is greater, of the average value. If the parties to the test agree, an alternative criteria of stability may be used.

(d) Establish and maintain flow-rating pressure until flow instruments indicate a steady-state condition.

(e) Record the following:

(1) device-inlet pressure
(2) device-inlet temperature
(3) device-disk lift, as applicable
(4) flowmeter inlet static pressure
(5) flowmeter inlet temperature
(6) flowmeter differential pressure

(f) Decrease inlet pressure slowly, and again record reseating pressure of the device.

4-4.5 Details of Procedure for Flow Measurement of Devices Using Sonic-Inferential-Meter Method

(a) Increase the pressure at the device inlet. During the pressure interval starting at 90% of the expected set pressure, the rate of pressure increase shall not exceed 2.0 psi/sec or whatever lesser rate of increase is necessary for the accurate reading of the pressure. Observe and record the set pressure of the device and any other desired or pertinent characteristics.

(b) For reclosing pressure relief devices, continue increasing the pressure at the device inlet until the device remains open. Observe the action of the device. Gradually decrease the inlet pressure until the device closes. Record the reseating pressure of the device. Observe the action of the device.

(c) For reclosing pressure relief devices, repeat (a) and (b) above, recording set and reseating pressures until both are established and stabilized. These values are established by computing the average of at least the last three measured values. Set pressure and blowdown are considered stable when the measured values show no consistent upward or downward trend and all are within ±1% or ±0.5 psi, whichever is greater, of the average value. If the parties to the test agree, an alternative criteria of stability may be used.

(d) Establish and maintain flow-rating pressure until flow instruments indicate a steady-state condition.

(e) Record the following:

(1) device-inlet pressure
(2) device-inlet temperature
(3) device-disk lift, as applicable
(4) flowmeter inlet total pressure
(5) flowmeter inlet total temperature

Copyright ASME International
Provided by IHS under license with ASME
No reproduction or networking permitted without license from IHS

Order Number: 02005095
Sold to:LHIP CO LTD [700166107362],
2014-04-15 08:26:03 UTC

(f) Decrease inlet pressure slowly, and again record reseating pressure of a reclosing pressure relief device.

4-4.6 Observation of the Mechanical Characteristics

During the subsonic or sonic-inferential-meter method of test, the mechanical characteristics shall be observed by hearing, feeling, or seeing and recorded during the flow test. If the valve chatters, flutters, or does not reseat satisfactorily, such action shall be recorded. Upon agreement of all interested parties, the valve may be readjusted or repaired and retested. Excessive and continual chatter could cause mechanical failure of the valve and thereby create a hazard to personnel in the test area.

4-4.7 Recording Additional Data

During the subsonic or sonic-inferential-meter method of test, it may be desirable or a requirement to record pressures other than, or in addition to, those listed in para. 4-4.4 or 4-4.5. Where possible, such recorded pressures shall be identified in accordance with Mandatory Appendix I.

4-5 TESTING WITH LIQUIDS, PRESSURE RELIEF DEVICES DISCHARGING TO ATMOSPHERIC PRESSURE

4-5.1 Test Arrangements

The pressure source may be a pump or an accumulator of liquid in combination with high-pressure compressed gas. Measures shall be taken to ensure that pressure pulsations in the system are reduced to a minimum. The flowmeter test arrangement, Fig. 4-2.3-1, illustrates a recommended arrangement, up to and including the test pressure relief device. Figure 4-2.10-3 illustrates a recommended discharge arrangement.

(a) If a flowmeter [para. 4-2.4(a)(1)] is used, the associated measurements shall include, as a minimum, flowmeter differential pressure, device-inlet pressure, and liquid temperature. In this case, the use of a means of determining the volume or weight of the discharge is not a requirement.

NOTE: When conducting flowmeter tests involving a pressure relief device having high inlet pressure and low flow rates, it may be desirable to install the flowmeter downstream of the pressure relief device. Such installations are acceptable provided the installation has been calibrated in accordance with subsection 3-8.

(b) If a flowmeter is not used, volumetric or gravimetric determination of the pressure relief device discharge over a period of time shall be made. Readings of the device-inlet pressure and liquid temperature shall be made and recorded. Means shall be provided for directing the discharge into and diverting it from the tank used for measuring purposes.

4-5.2 Preliminary Tests

Preliminary tests may be permitted for testing and adjusting operation of the test apparatus and/or device being tested (see subsection 3-5). Such tests may be necessary to ensure the absence of leaks in the test apparatus and ensure that all gas or air has been vented from the component parts of the system, except those referred to in para. 4-5.1.

4-5.3 Details of Procedure for Flow Measurement of Devices Using the Flowmeter Method

(a) Increase the pressure at the device inlet. During the pressure interval starting at 90% of the expected set pressure, the rate of pressure increase shall not exceed 2.0 psi/sec or whatever lesser rate of increase is necessary for the accurate reading of the pressure. Observe and record the set pressure of the device and any other desired or pertinent characteristics.

(b) For reclosing pressure relief devices, continue increasing the pressure at the device inlet until the device remains open. Observe the action of the device. Gradually decrease the inlet pressure until the device closes. Record the reseating pressure of the device. Observe the action of the device.

(c) For reclosing pressure relief devices, repeat (a) and (b) above, recording set and reseating pressures until both are established and stabilized. These values are established by computing the average of at least the last three measured values. Set pressure and blowdown are considered stable when the measured values show no consistent upward or downward trend and all are within ±1% or ±0.5 psi, whichever is greater, of the average value. If the parties to the test agree, an alternative criteria of stability may be used.

(d) Establish and maintain flow-rating pressure until instruments indicate a steady-state condition.

(e) Record the following:

(1) device-inlet pressure

(2) device-disk lift, as applicable

(3) liquid temperature

(4) flowmeter differential pressure

(f) Decrease inlet pressure slowly, and again record reseating pressure of a reclosing pressure relief device.

4-5.4 Details of Procedure for Flow Measurement of Devices Using the Volumetric or Gravimetric Method

NOTE: The period of the test is determined by the measured time the discharge of the device is directed into the tank used for measuring purposes. Care shall be taken that the pressure at the device inlet remains stable during this period.

(a) Increase the pressure at the device inlet. During the pressure interval starting at 90% of the expected set pressure, the rate of pressure increase shall not exceed 2.0 psi/sec or whatever lesser rate of increase is necessary for the accurate reading of the pressure. Observe and record the set pressure of the device and any other desired or pertinent characteristics.

Copyright ASME International
Provided by IHS under license with ASME
Reproduction or networking permitted without license from IHS

Order Number: 02005095
Sold to:LHIP CO LTD [700166107362],
2014-04-15 08:26:03 UTC

(b) For reclosing pressure relief devices, continue increasing the pressure at the device inlet until the device remains open. Observe the action of the device. Gradually decrease the inlet pressure until the device closes. Record the reseating pressure of the device. Observe the action of the device.

(c) For reclosing pressure relief devices, repeat (a) and (b) above, recording set and reseating pressures until both are established and stabilized. These values are established by computing the average of at least the last three measured values. Set pressure and blowdown are considered stable when the measured values show no consistent upward or downward trend and all are within ±1% or ±0.5 psi, whichever is greater, of the average value. If the parties to the test agree, an alternative criteria of stability may be used.

(d) Establish and maintain flow-rating pressure until instruments indicate a steady-state condition.

(e) Record the following:

(1) device-inlet pressure

(2) device-disk lift, as applicable

(3) liquid temperature

(f) Direct valve discharge into measuring tank.

(g) Repeat (e) above at specified intervals.

(h) Divert device discharge from measuring tank.

(i) Record length of runs and times of recording data as measured by stopwatch, electric synchronous clock with second hand, or other appropriate means.

(j) Decrease inlet pressure slowly, and again record reseating pressure of a reclosing pressure relief device.

4-5.5 Observation of Mechanical Characteristics

During the flowmeter or volumetric method of test, the mechanical characteristics shall be observed by hearing, feeling, or seeing and recorded during the flow test. If the valve chatters, flutters, or does not reseat satisfactorily, such action shall be recorded. Upon agreement of all interested parties, the valve may be readjusted or repaired and retested.

4-5.6 Recording Additional Data

During the flowmeter or volumetric method test, it may be desirable, or a requirement, to record pressures other than, or in addition to, those listed in paras. 4-5.3 and 4-5.4. Where possible, such recorded pressures shall be identified in accordance with Mandatory Appendix I. With closed discharge systems, it is not possible to observe or record some characteristic pressures.

4-6 TESTING WITH STEAM, WITH BACK PRESSURE ABOVE ATMOSPHERIC

4-6.1 Test Arrangements

Recommended test arrangements are illustrated in Figs. 4-2.3-1, 4-2.10-4, and 4-6-1. Capacity determination shall be made by means of a flowmeter [see para. 4-2.4(a)(1)] installed at the upstream side of the valve. Figure 4-2.3-1 shows a recommended test arrangement, up to and including the test valve. Figures 4-2.10-4 and 4-6-1 show discharge arrangements.

(a) Figure 4-2.10-4 illustrates a recommended test arrangement for testing with superimposed back pressure. Means are provided for applying back pressure to the valve prior to the valve reaching its set pressure [see para. 4-5.5(b)]. A control valve shall be provided for controlling the back pressure prior to, during, and after the opening of the test valve. The piping shall be so arranged that condensate will not collect in the piping and a drain shall be provided on the back pressure vessel.

(b) Figure 4-6-1 illustrates a recommended test arrangement for testing with built-up back pressure. Required equipment includes a means of controlling the degree of back pressure built up on the test valve after opening and for measuring the static pressure in the test-valve discharge.

4-6.2 Preliminary Tests

Preliminary tests may be permitted for testing and adjusting operation of the test apparatus and/or valve being tested (see subsection 3-5). Such tests may be necessary to ensure the absence of leaks in the test apparatus and that flowmeter reservoirs (meterpots) are filled, properly cooled, and initially vented.

4-6.3 Barometric Pressure

Record the barometric pressure (see para. 4-2.1).

4-6.4 Details of Procedure for Flow Measurement

(a) Atmospheric Back-Pressure Test. Tests may be conducted to determine the performance of the valve when discharging at atmospheric back pressure. The valve shall be equipped with an atmospheric discharge, as shown in Fig. 4-2.3-1. Test procedure shall be in accordance with paras. 4-3.4(a) through (j), performing such portions of the procedure and recording such data as has been agreed upon.

NOTE: The objectives of this portion of the test may be only to determine and record the set pressure and closing pressure of the valve, and the lift of the valve at the flow-rating pressure, when the valve is discharging to atmosphere. In this case, the portions of paras. 4-3.4(a) through (j) relating to capacity determination may be eliminated.

(b) Back-Pressure Test. Following the atmospheric back-pressure test, if performed, install the discharge arrangement required by Fig. 4-2.10-4 or Fig. 4-6-1 depending on the type of back pressure desired.

4-6.5 Testing With Superimposed Back Pressure [See Para. 4-6.1(a)]

(a) Adjust the back pressure on the valve and the discharge piping to the required value. Increase the pressure at the valve inlet. During the pressure interval,

Copyright ASME International
Provided by IHS under license with ASME
No reproduction or networking permitted without license from IHS

Order Number: 02005095
Sold to:LHIP CO LTD [700166107362],
2014-04-15 08:26:03 UTC

Fig. 4-6-1 Recommended Discharge Arrangements for Testing Devices With Built-Up Back Pressure

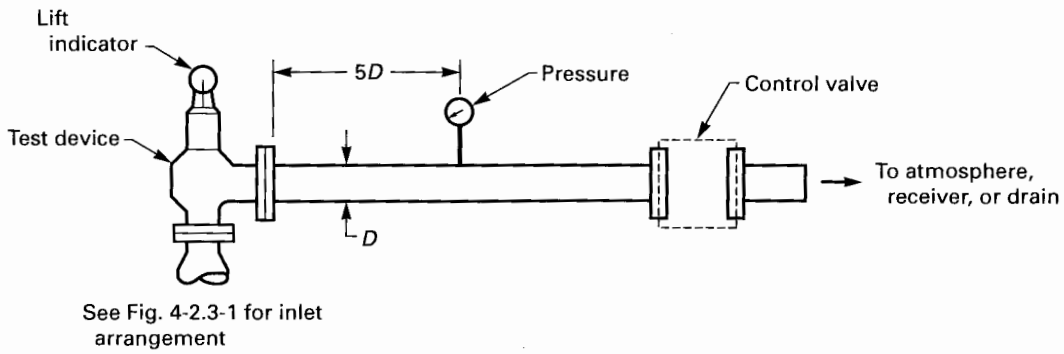

starting at 90% of the expected set pressure, the rate of pressure increase shall not exceed 2.0 psi/sec or whatever lesser rate of increase is necessary for the accurate reading of the set pressure. Observe and record the pressure of the valve, the back pressure, and any other desired or pertinent characteristics.

(b) Continue increasing the pressure at the valve inlet until the specified overpressure is reached. Observe the action of the valve. Gradually decrease the inlet pressure until the valve closes. Record the reseating pressure of the valve and the back pressure.

NOTE: During (a) and (b) above, care shall be exercised to maintain the back pressure at as uniform a value as possible.

(c) Repeat (a) and (b) above, recording set and reseating pressures and back pressure until all are established and stabilized. These values are established by computing the average of at least the last three measured values. Set pressure and blowdown are considered stable when the measured values show no consistent upward or downward trend and all are within ±1% or ±0.5 psi, whichever is greater, of the average value. If the parties to the test agree, an alternative criteria of stability may be used.

(d) Establish and maintain flow-rating pressure until flow instruments and back pressure gage indicate a steady-state condition.

(e) Close test-drum drain, and establish and record or mark starting condensate level in a gage glass.

(f) Record the following:

(1) valve-inlet pressure

(2) valve-inlet-calorimeter-discharge temperature

(3) valve-disk lift

(4) flowmeter static pressure

(5) flowmeter differential pressure

(6) flowmeter-calorimeter-discharge temperature

(7) back pressure

(g) Reestablish original gage-glass level or new level at end of run, determine condensate by weight or volume measurement, and record.

(h) Decrease inlet pressure slowly, and again record reseating pressure of valve and back pressure.

(i) In most instances, it is desirable, or a requirement, that the valve be tested over a given range of back pressure. In such cases, it is convenient if the value of back pressure chosen in (a) above be either the lowest or highest of this range. Back pressure may then be increased or decreased in increments, repeating (a) through (h) above at each incremental value.

4-6.6 Testing With Built-Up Back Pressure [See Para. 4-6.1(b)]

(a) Increase the pressure at the valve inlet. During the pressure interval starting at 90% of the expected set pressure, the rate of pressure increase shall not exceed 2.0 psi/sec or whatever lesser rate of increase is necessary for the accurate reading of the pressure. Observe and record the set pressure of the valve and any other desired or pertinent characteristics.

(b) Continue increasing the pressure at the valve inlet until the specified overpressure is reached. Adjust built-up back pressure to desired value. Observe the action of the valve. Gradually decrease the inlet pressure until the valve closes. Record the reseating pressure of the valve and back pressure. Observe the action of the valve.

Remove any flow restriction in the tailpipe assembled to test valve outlet. If this is not done, the valve may not achieve the same lift it did during the initial test.

(c) Repeat (a) and (b) above, recording set and reseating pressures and back pressure until all are established and stabilized. These values are established by computing the average of at least the last three measured values. Set pressure and blowdown are considered stable when the measured values show no consistent upward or downward trend and all are within ±1% or ±0.5 psi, whichever is greater, of the average value. If the parties to the test agree, an alternative criteria of stability may be used.

(d) Establish and maintain flow-rating pressure until flow instruments and back pressure gage indicate a steady-state condition.

(e) Close test-drum drain, and establish and record or mark starting condensate level in a gage glass.

yright ASME International
ided by IHS under license with ASME
eproduction or networking permitted without license from IHS

Order Number: 02005095
Sold to:LHIP CO LTD [700166107362],
2014-04-15 08:26:03 UTC

(f) Record the following:
(1) valve-inlet pressure
(2) valve-inlet-calorimeter-discharge temperature
(3) valve-disk lift
(4) flowmeter static pressure
(5) flowmeter differential pressure
(6) flowmeter-calorimeter-discharge temperature
(7) back pressure

(g) Reestablish original gage-glass level or new level at end of run, determine condensate by weight or volume measurement, and record.

(h) Decrease inlet pressure slowly, and again record reseating pressure of valve and back pressure.

(i) In most instances, it is desirable, or a requirement, that the valve be tested over a given range of back pressure. In such cases, it is convenient if the value of back pressure chosen in (b) above be either the lowest or highest of this range. Back pressure may then be increased or decreased in increments, repeating (a) through (h) above at each incremental value.

4-6.7 Observation of Mechanical Characteristics

During the tests with superimposed or built-up back pressure, mechanical characteristics shall be observed by hearing, feeling, or seeing and recorded during the flow test. If the valve chatters, flutters, or does not reseat satisfactorily, such action shall be recorded. Upon agreement of all interested parties, the valve may be readjusted or repaired and retested. When testing valves against back pressure, any range in which the valve does not reach rated lift at the flow-rating pressure shall be recorded.

4-6.8 Recording Additional Data

During tests with superimposed or built-up back pressure, it may be desirable, or a requirement, to record pressures other than, or in addition to, those listed in para. 4-6.5 or 4-6.6. Where possible, such recorded pressures shall be identified in accordance with Mandatory Appendix I. With closed discharge systems, such as para. 4-6.1(a), it is not possible to observe or record some characteristic pressures.

4-7 TESTING WITH GAS OR AIR, WITH BACK PRESSURE ABOVE ATMOSPHERIC

4-7.1 Test Arrangements

Recommended test arrangements are illustrated in Figs. 4-2.3-1, 4-2.10-4, and 4-6-1. Capacity determination shall be made by means of a flowmeter [see para. 4-2.4(a)(1)] installed at the upstream side of the valve. Figure 4-2.3-1 shows a recommended test arrangement, up to and including the test valve. Figures 4-2.10-4 and 4-6-1 show discharge arrangements.

(a) Figure 4-2.10-4 illustrates a recommended test arrangement for testing with superimposed back pressure to the valve prior to the valve reaching its set pressure [see para. 4-2.5(b)]. A control valve shall be provided for controlling the back pressure prior to, during, and after the opening of the test valve. The piping shall be so arranged that condensate will not collect in the piping and a drain shall be provided on the back-pressure vessel.

(b) Figure 4-6-1 illustrates a recommended test arrangement for testing with built-up back pressure. Required equipment includes a means of controlling the degree of back pressure built up on the test valve after opening and for measuring the static pressure in the test-valve discharge.

4-7.2 Preliminary Tests

Preliminary tests may be permitted for testing and adjusting operation of the test apparatus and/or valve being tested (see subsection 3-5). Such tests may be necessary to ensure the absence of leaks in the test apparatus.

4-7.3 Barometric Pressure

Record the barometric pressure (see para. 4-2.1).

4-7.4 Details of Procedure for Flow Measurement

(a) *Atmospheric Back-Pressure Test.* Tests may be conducted to determine the performance of the valve when discharging at atmospheric back pressure. The valve shall be equipped with an atmospheric discharge, as shown in Fig. 4-2.3-1. Test procedure shall be in accordance with paras. 4-4.4(a) through (f) performing such portions of the procedure and recording such data as has been agreed upon.

NOTE: The objectives of this portion of the test may be only to determine and record the set pressure and closing pressure of the valve, and the lift of the valve at the flow-rating pressure, when the valve is discharging to atmosphere. In this case, the portions of paras. 4-4.4(a) through (f) relating to capacity determination may be eliminated.

(b) *Back-Pressure Test.* Following the atmospheric back-pressure test, if performed, install the discharge arrangement required by Fig. 4-2.10-4 or Fig. 4-6-1, depending on the type of back pressure desired.

4-7.5 Testing With Superimposed Back Pressure [See Para. 4-7.1(a)]

(a) Adjust the back pressure on the valve and the discharge piping to the required value. Increase the pressure at the valve inlet. During the pressure interval starting at 90% of the expected set pressure, the rate of pressure increase shall not exceed 2.0 psi/sec or whatever lesser rate of increase is necessary for the accurate reading of the set pressure. Observe and record the set pressure of the valve, the back pressure, and any other desired or pertinent characteristics.

Copyright ASME International
Provided by IHS under license with ASME
No reproduction or networking permitted without license from IHS

Order Number: 02005095
Sold to:LHIP CO LTD [700166107362],
2014-04-15 08:26:03 UTC

(b) Continue increasing the pressure at the valve inlet until the specified overpressure is reached. Observe the action of the valve. Gradually decrease the inlet pressure until the valve closes. Record the reseating pressure of the valve and the back pressure. Observe the action of the valve.

NOTE: During (a) and (b) above, care shall be exercised to maintain the back pressure at as uniform a value as possible.

(c) Repeat (a) and (b) above, recording set and reseating pressures, and back pressure, until all are established and stabilized. These values are established by computing the average of at least the last three measured values. Set pressure and blowdown are considered stable when the measured values show no consistent upward or downward trend and all are within ±1% or ±0.5 psi, whichever is greater, of the average value. If the parties to the test agree, an alternative criteria of stability may be used.

(d) Establish and maintain flow-rating pressure until flow instruments and back pressure gage indicate a steady-state condition.

(e) Record the following:

(1) valve-inlet pressure
(2) valve-inlet temperature
(3) valve-disk lift
(4) flowmeter-inlet static pressure
(5) flowmeter-inlet temperature
(6) flowmeter differential pressure
(7) back pressure

(f) Decrease inlet pressure slowly, and again record reseating pressure of valve and back pressure.

(g) In most instances, it is desirable or a requirement that the valve be tested over a given range of back pressure. In such cases, it is convenient if the value of back pressure chosen in para. 4.7.5(a) be either the lowest or highest of this range. Back pressure may then be increased or decreased in increments, repeating (a) through (f) above at each incremental value.

4-7.6 Testing With Built-Up Back Pressure [See Para. 4-7.1(b)]

(a) Increase the pressure at the valve inlet. During the pressure interval starting at 90% of the expected set pressure, the rate of pressure increase shall not exceed 2.0 psi/sec or whatever lesser rate of increase is necessary for the accurate reading of the pressure. Observe and record the set pressure of the valve and any other desired or pertinent characteristics.

(b) Continue increasing the pressure at the valve inlet until the specified overpressure is reached. Adjust built-up back pressure to desired value. Observe the action of the valve. Gradually decrease the inlet pressure until the valve closes. Record the reseating pressure of the valve and back pressure. Observe the action of the valve.

Remove any flow restriction in the tailpipe assembled to test valve outlet. If this is not done, the valve may not achieve the same lift it did during the initial test.

(c) Repeat (a) and (b) above, recording set and reseating pressures, and back pressure, until all are established and stabilized. These values are established by computing the average of at least the last three measured values. Set pressure and blowdown are considered stable when the measured values show no consistent upward or downward trend and all are within ±1% or ±0.5 psi, whichever is greater, of the average value. If the parties to the test agree, an alternative criteria of stability may be used.

(d) Establish and maintain flow-rating pressure and back pressure until flow instruments and back pressure gage indicate a steady-state condition.

(e) Record the following:

(1) valve-inlet pressure
(2) valve-inlet temperature
(3) valve-disk lift
(4) flowmeter inlet static pressure
(5) flowmeter inlet temperature
(6) flowmeter differential pressure
(7) back pressure

(f) Decrease inlet pressure slowly, and again record reseating pressure and back pressure.

(g) In most instances, it is desirable, or a requirement, that the valve be tested over a given range or back pressure. In such cases, it is convenient if the value of back pressure chosen in para. 4-7.5(a) be either the lowest or highest of this range. Back pressure may then be increased or decreased in increments, repeating (a) through (f) above at each incremental value.

4-7.7 Observation of Mechanical Characteristics

During the tests with superimposed or built-up back pressure, mechanical characteristics shall be observed by hearing, feeling, or seeing and recorded during the flow test. If the valve chatters, flutters, or does not reseat satisfactorily, such action shall be recorded. Upon agreement of all interested parties, the valve may be readjusted or repaired and retested. When testing valves against back pressure, any range in which the valve does not reach rated lift at the flow-rating pressure shall be recorded.

4-7.8 Recording Additional Data

It may be desirable or a requirement to record pressures other than, or in addition to, those listed in para. 4-3.4. Where possible, such recorded pressures shall be identified in accordance with Mandatory Appendix I. With closed discharge systems, it is not possible to observe or record some characteristic pressures.

yright ASME International
ided by IHS under license with ASME
eproduction or networking permitted without license from IHS

Order Number: 02005095
Sold to:LHIP CO LTD [700166107362],
2014-04-15 08:26:03 UTC

4-8 TESTING WITH LIQUIDS, WITH BACK PRESSURE ABOVE ATMOSPHERIC

4-8.1 Test Arrangements

Pressure sources can be a pump or an accumulator of liquid, in combination with high-pressure compressed gas. Precautions shall be taken to ensure that pressure pulsations are reduced to a minimum. Figure 4-2.3-1 shows a recommended test arrangement, up to and including the test valve. Figures 4-2.10-4 and 4-6-1 show discharge arrangements for testing with superimposed and built-up back pressure, respectively. A flowmeter [see para. 4-2.4(b)(1)] shall be used in either case. Instrumentation shall be suitably installed to indicate or record the following:

(a) liquid temperature
(b) flowmeter differential pressure
(c) valve-inlet pressure
(d) back pressure

4-8.2 Preliminary Tests

Preliminary tests may be permitted for testing and adjusting operation of the test apparatus and/or valve being tested (see subsection 3-5). Such tests may be necessary to ensure the absence of leaks in the test apparatus and ensure that all gas or air has been vented from the component parts of the system.

4-8.3 Details of Procedure for Flow Measurement

(a) *Atmospheric Back-Pressure Test.* Tests may be conducted to determine the performance of the valve when discharging at atmospheric back pressure. The valve shall be equipped with an atmospheric discharge, as shown in Fig. 4-2.3-1. Test procedure shall be in accordance with paras. 4-5.3(a) through (f) performing such portions of the procedure and recording such data as has been agreed upon.

NOTE: The objectives of this portion of the test may be only to determine and record the set pressure and closing pressure of the valve, and the lift of the valve at the flow-rating pressure, when the valve is discharging to atmosphere. In this case, the portions of paras. 4-5.3(a) through (f) relating to capacity determination may be eliminated.

(b) *Back-Pressure Test.* Following the atmospheric back-pressure test, if performed, install the discharge arrangement required by Fig. 4-2.10-4 or Fig. 4-6-1, depending on the type of back pressure desired.

4-8.4 Testing With Superimposed Back Pressure (See Fig. 4-2.10-4)

(a) Adjust the back pressure on the valve and discharge piping to the required value. Increase the pressure at the valve inlet. During the pressure interval starting at 90% of the expected set pressure, the rate of pressure increase shall not exceed 2.0 psi/sec or whatever lesser rate of increase is necessary for the accurate reading of the pressure. Observe and record the set pressure of the valve, the back pressure, and any other desired or pertinent characteristics.

(b) Continue increasing the pressure at the valve inlet until the specified overpressure is reached. Observe the action of the valve. Gradually decrease the inlet pressure until the valve closes. Record the reseating pressure of the valve and the back pressure. Observe the action of the valve.

NOTE: During (a) and (b) above, care shall be exercised to maintain the back pressure at as uniform a value as possible.

(c) Repeat (a) and (b) above, recording set and reseating pressures, and back pressure, until all are established and stabilized. These values are established by computing the average of at least the last three measured values. Set pressure and blowdown are considered stable when the measured values show no consistent upward or downward trend and all are within ±1% or ±0.5 psi, whichever is greater, of the average value. If the parties to the test agree, an alternative criteria of stability may be used.

(d) Establish and maintain flow-rating pressure until flow instruments and back pressure gage indicate a steady-state condition.

(e) Record the following:

(1) valve-inlet pressure
(2) valve-disk lift
(3) liquid-inlet temperature
(4) flowmeter differential pressure
(5) back pressure

(f) Decrease inlet pressure slowly, and again record reseating pressure of valve and back pressure.

(g) In most instances, it is desirable, or a requirement, that the valve be tested over a given range of back pressure. In such cases, it is convenient if the value of back pressure chosen in (a) above be either the lowest or highest of this range. Back pressure may then be increased or decreased in increments, repeating (a) through (f) above at each incremental value.

4-8.5 Testing With Built-Up Back Pressure (See Fig. 4-6-1)

(a) Increase the pressure at the valve inlet. During the pressure interval starting at 90% of the expected set pressure, the rate of pressure increase shall not exceed 2.0 psi/sec or whatever lesser rate of increase is necessary for the accurate reading of the pressure. Observe and record the set pressure of the valve and any other desired or pertinent characteristics.

Copyright ASME International
Provided by IHS under license with ASME
No reproduction or networking permitted without license from IHS

Order Number: 02005095
Sold to:LHIP CO LTD [700166107362],
2014-04-15 08:26:03 UTC

(b) Continue increasing the pressure at the valve inlet until the specified overpressure is reached. Adjust built-up back pressure to the desired value. Observe the action of the valve. Gradually decrease the inlet pressure until the valve closes. Record the reseating pressure of the valve and back pressure. Observe the action of the valve.

Remove any flow restriction in the tailpipe assembled to test valve outlet. If this is not done, the valve may not achieve the same lift it did during the initial test.

(c) Repeat (a) and (b) above, recording set and reseating pressures, and back pressure, until all are established and stabilized. These values are established by computing the average of at least the last three measured values. Set pressure and blowdown are considered stable when the measured values show no consistent upward or downward trend and all are within ±1% or ±0.5 psi, whichever is greater, of the average value. If the parties to the test agree, an alternative criteria of stability may be used.

(d) Establish and maintain flow-rating pressure and back pressure until flow instruments and back-pressure gage indicate a steady-state condition.

(e) Record the following:

(1) valve-inlet pressure

(2) valve-disk lift

(3) liquid-inlet temperature

(4) flowmeter differential pressure

(5) back pressure

(f) Decrease inlet pressure slowly and again record reseating pressure of valve and back pressure.

(g) In most instances, it is desirable, or a requirement, that the valve be tested over a given range of back pressure. In such cases, it is convenient if the value of back pressure chosen in para. 4.8.4(a) be either the lowest or highest of this range. Back pressure may then be increased or decreased in increments, repeating (a) through (f) above at each incremental value.

4-8.6 Tests With Built-Up Back Pressure With Measuring Tank

The use of volumetric or gravimetric determination of valve discharge when testing with built-up back pressure is permissible. In such cases, the interested parties shall agree on a test procedure prior to conducting the tests.

4-8.7 Observation of Mechanical Characteristics

During the tests with superimposed or built-up back pressure, mechanical characteristics shall be observed by hearing, feeling, or seeing and recorded during the flow test. If the valve chatters, flutters, or does not reseat satisfactorily, such action shall be recorded. Upon agreement of all interested parties, the valve may be readjusted, repaired, and retested. When testing valves against back pressure, any range in which the valve does not reach rated lift at the flow-rating pressure shall be recorded.

4-8.8 Recording Additional Data

During the tests with superimposed or built-up back pressure, it may be desirable, or a requirement, to record pressures other than, or in addition to, those listed in para. 4-8.4 or 4-8.5. Where possible, such recorded pressure shall be identified in accordance with Mandatory Appendix I. With closed discharge systems, it is not possible to observe or record some characteristic pressures.

4-9 TESTING WITH GAS OR AIR, NONRECLOSING PRESSURE RELIEF DEVICE FLOW RESISTANCE METHOD

4-9.1 Test Arrangement

A recommended test arrangement is shown in the flow resistance test rig arrangement, Fig. 3-9-1, which represents the test vessel and test device of Fig. 4-2.3-1. The device shall have the same nominal pipe size dimension as the test rig. Differential pressure measurement instruments or transducers shall be used between pressure taps A-B, B-C, and C-D. The primary element shall be either a subsonic-inferential meter or sonic-inferential meter as shown in Fig. 4-2.3-1 and described in para. 4-2.4(a).

Instrumentation for each type of meter is listed in the following:

(a) Subsonic-Inferential Meters. Measurements associated with subsonic-inferential meters are

(1) inlet static pressure

(2) inlet temperature

(3) differential pressure

(b) Sonic-Inferential Meters. Measurements associated with sonic-inferential meters are

(1) inlet total (stagnation) pressure

(2) inlet total (stagnation) temperature

4-9.2 Preliminary Tests

Preliminary tests may be permitted for testing the test apparatus. Such tests may be necessary to ensure the absence of leaks in the test apparatus and that all differential pressure measurement devices are functioning properly and within their pressure measurement range.

4-9.3 Barometric Pressure

Record the barometric pressure (see para. 4-2.1).

4-9.4 Details of Procedure for Flow Resistance Measurement Using Subsonic-Inferential-Meter Method

(a) Install the device into the flow resistance test rig.

(b) Increase the pressure at pressure tap B. During the interval starting at 90% of the expected set pressure,

yright ASME International
ided by IHS under license with ASME
eproduction or networking permitted without license from IHS

Order Number: 02005095
Sold to:LHIP CO LTD [700166107362],
2014-04-15 08:26:03 UTC

the rate of pressure increase shall not exceed 2.0 psi/sec or whatever lesser rate of increase is necessary for the accurate reading of the pressure. Observe and record the set pressure of the device and any other desired or pertinent characteristics.

(c) Establish and maintain flow-rating pressure until flow instruments indicate a steady-state condition.

(d) Simultaneously record the following measurements (it is preferable to use a data acquisition system for these measurements):

(1) test rig inlet pressure
(2) test rig inlet temperature
(3) flowmeter inlet static pressure
(4) flowmeter inlet total temperature
(5) flowmeter differential pressure
(6) tap B pressure
(7) differential pressure tap A-B
(8) differential pressure tap B-C
(9) differential pressure tap C-D

4-9.5 Details of Procedure for Flow Resistance Measurement Using Sonic-Inferential-Meter Method

(a) Install the device into the flow resistance test rig.

(b) Increase the pressure at pressure tap B. During the interval starting at 90% of the expected set pressure, the rate of pressure increase shall not exceed 2.0 psi/sec or whatever lesser rate of increase is necessary for the accurate reading of the pressure. Observe and record the set pressure of the device and any other desired or pertinent characteristics.

(c) Establish and maintain flow-rating pressure until flow instruments indicate a steady-state condition.

(d) Simultaneously record the following measurements (it is preferable to use a data acquisition system for these measurements):

(1) test rig inlet pressure
(2) test rig inlet temperature
(3) flowmeter inlet total pressure
(4) flowmeter inlet total temperature
(5) tap B pressure
(6) differential pressure tap A-B
(7) differential pressure tap B-C
(8) differential pressure tap C-D

4-9.6 Recording Additional Data

During the subsonic or sonic-inferential-meter method of test, it may be desirable, or a requirement, to record pressures other than, or in addition to, those listed in para. 4-9.4 or 4-9.5. Where possible, such recorded pressures shall be identified in accordance with Mandatory Appendix I.

4-9.7 Resistance Testing on Nonreclosing Pressure Relief Devices With Connections Not Compatible With Fig. 3-9-1

The use of adapters for devices with inlet/outlet connections that are not compatible with the test rigs of Fig. 3-9-1 are allowed provided the device is the same nominal size as the test rig and the adapter's resistance to flow, if the adapter constitutes part of a flow path, is properly accounted for as follows:

(a) Install the adapter into the test rig of Fig. 3-9-1, and conduct three baseline flow tests to determine the average flow resistance of the adapter.

(b) Proceed with determining the flow resistance of the combined assembly, the test device, and adapter, per para. 4-9.4 or 4-9.5.

(c) Calculate the test device individual flow resistance, K_{Ri}, by subtracting the average flow resistance of the adapter. The use of, and specification of, the adapter shall be included in the test report.

4-10 TESTING NONRECLOSING PRESSURE RELIEF DEVICES TO DETERMINE A SET PRESSURE FOR INCOMPRESSIBLE FLUIDS

4-10.1 Test Arrangement

A recommended test arrangement for conducting set pressure tests on incompressible fluids is shown in Fig. 4-10-1. The test arrangement shall have the same or larger nominal pipe size dimensions as the device. Unless no portion of the device extends into the outlet connection arrangement, the outlet connection shall match the internal bore of the flow resistance test arrangement of subsection 4-9. The test medium shall be water or other suitable incompressible fluid. The test shall be conducted in such a way as to prevent compressed gas from passing through the device at any time. After set pressure tests have been conducted, the device shall be removed from this test arrangement and installed within the resistance factor test arrangement shown in Fig. 3-9-1. The device flow resistance factor shall be tested per subsection 4-9 using gas or air as the fluid.

4-10.2 Preliminary Test

Preliminary tests may be permitted for testing and adjusting operation of the test apparatus and/or device being tested (see subsection 3-5). Such tests may be necessary to ensure the absence of leaks in the test apparatus.

4-10.3 Details of Procedure for Determining a Nonreclosing Pressure Relief Device Flow Resistance Factor Applicable for Incompressible Fluids

(a) Install the device between the flanges of the test apparatus.

Copyright ASME International
Provided by IHS under license with ASME
No reproduction or networking permitted without license from IHS

Order Number: 02005095
Sold to:LHIP CO LTD [700166107362],
2014-04-15 08:26:03 UTC

Fig. 4-10-1 Recommended Arrangements for Conducting Opening Test on Nonreclosing Pressure Relief Devices With Incompressible Fluids

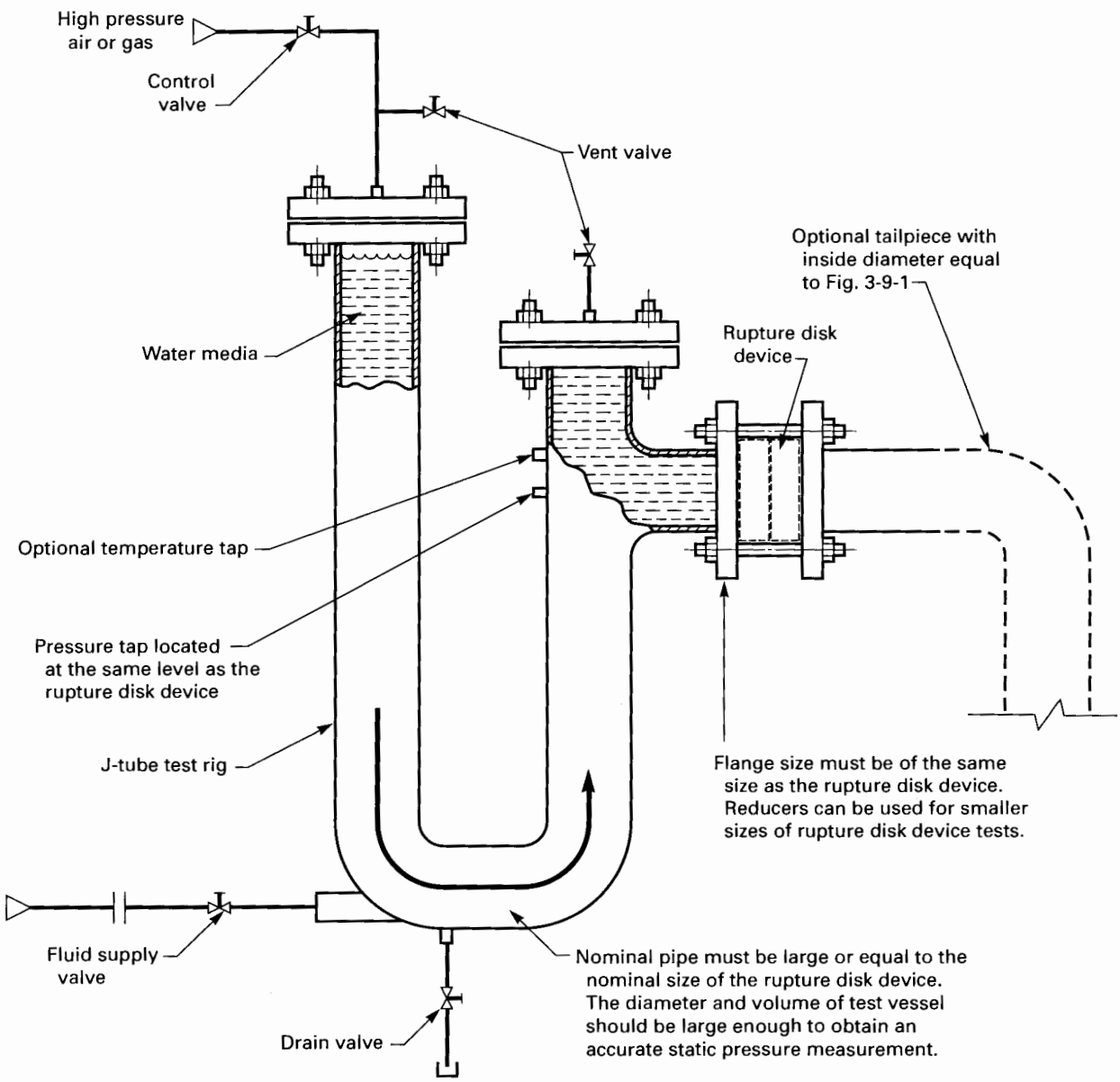

yright ASME International
vided by IHS under license with ASME
reproduction or networking permitted without license from IHS

Order Number: 02005095
Sold to:LHIP CO LTD [700166107362],
2014-04-15 08:26:03 UTC

(b) Position valves to fill the test apparatus with liquid, and vent any trapped gas immediately upstream to the device.

(c) Reposition valves to pressurize the system. Increase the pressure at the pressure tap. During the interval starting at 90% of the expected set pressure, the rate of pressure increase shall not exceed 2.0 psi/sec or whatever lesser rate of increase is necessary for the accurate reading of the pressure. Observe and record the set pressure of the device and any other desired or pertinent characteristics.

(d) Remove the device from the test apparatus. Care shall be taken not to disturb the opening pattern of the device.

(e) Complete the device flow resistance testing per para. 4-9.4 using gas or air as the test medium.

Copyright ASME International
Provided by IHS under license with ASME
No reproduction or networking permitted without license from IHS

Order Number: 02005095
Sold to:LHIP CO LTD [700166107362],
2014-04-15 08:26:03 UTC

Section 5
Computation of Results

5-1 CORRECTION OF MEASURED VARIABLES

The values of measured variables shall be corrected in accordance with instrument calibrations. No other corrections to the data are permitted.

5-2 REVIEW OF INSTRUMENT READINGS

Before calculations are undertaken, the instrument readings, as recorded in the log, shall be reviewed for inconsistency and large fluctuation in accordance with ASME PTC 19.1.

5-3 USE OF EQUATION SYMBOLS

The symbols used in this Code are ones which are already in common use in the particular fields of engineering involved. In a few cases, the same letter has different meanings in different parts of the Code according to its application. In order to avoid confusion, each equation has been provided with its own list of definitions of symbols. Users are cautioned not to assume that a symbol has the same meaning in another equation.

5-4 DENSITY

Computation of density shall be made from measured values of pressure, temperature, and specific gravity.

(a) For steam and other condensible fluids, the density ρ shall be taken as $1/v$ where v, the specific volume, in ft^3/lbm, is obtained from the latest edition of ASME Steam Tables for steam or other established tables for other fluids at the measured pressure and temperature.

(b) The following relations shall be used for computing the density of gases where the physical properties are accurately known:

For any dry gas

$$\rho = \frac{144P}{ZRT}$$

For dry air, this reduces to

$$\rho = \frac{2.699P}{ZT}$$

For air and other gases

$$\rho = \frac{2.699GP}{ZT}$$

where

G = specific gravity with respect to dry air, M/M_a
M = molecular weight of gas
M_a = molecular weight of air
P = static pressure, psia
R = gas constant, $1{,}545.4/M$, ft-lbf/lbm-°R
T = temperature, °R
Z = compressibility factor as defined in the equation of state, $Pv = ZRT$. If more details are desired, see ASME PTC 19.5.

5-5 CAPACITY CALCULATIONS

The following is presented to assist in the use of the calculation sheets and aid in carrying out the several methods of computing capacity. Flow equations, correction factors, and procedures for calculations are in accordance with PTC 19.5.

5-5.1 Volumetric or Weighed-Water Method

This technique requires the collection of the discharge from the valve under test either as a mass or a volume over a known period of time. Care must be taken to ensure that the valve-inlet conditions are maintained throughout the test and that neither extraneous water is measured nor that any valve discharge is lost.

Form 5-5.1 should be used for recording the data and computing the results. The first eight items on this form are primarily for identification purposes. Items 9 through 12 record the amount of water collected over the given time interval. Item 11 is any leakage after the valve throat that might be at the valve stem, drain hole in the valve, or in the discharge piping. The manner in which this leakage is to be evaluated shall be agreed upon by the parties to the test, and the amount shall be added to the total accumulated (see Items 20 and/or 27). Item 12 is to account for any leakage of the condenser circulating water into the condensate. This is determined by a condenser leakage test, and the amount is to be subtracted from the total accumulated (see Item 20).

Items 13 through 20 record more data and show the calculation of the steam flow through the valve per hour, corrected to dry and saturated conditions at the valve inlet. In the equation for Item 20, the weight of water accumulated is divided by the time interval and multiplied by 60 to obtain the accumulated flow rate in pounds per hour. This is multiplied by the ratio of the square root of the specific volume of the flowing steam

yright ASME International
ided by IHS under license with ASME
eproduction or networking permitted without license from IHS

Order Number: 02005095
Sold to:LHIP CO LTD [700166107362],
2014-04-15 08:26:03 UTC

at the valve inlet to the specific volume of dry and saturated steam at the inlet pressure. To this quantity is added the valve-stem leakage. The condenser leakage is subtracted for the test using water.

Items 21 through 25 record additional data. Item 27 determines the measured relieving capacity for a water test with no correction being made for either specific volume or condenser leakage (it being assumed that a condenser was required). Item 28 provides a capacity correction to whatever reference condition has been specified for the test. Item 29 changes the unit to gallons per minute at the reference condition.

5-5.2 Steam — Flowmeter Method

This technique meters the steam flow upstream of the valve under test. Care must be taken that all the metered steam passes through the valve or is accounted for in the calculations. In addition to leakage, metered steam that does not reach the valve can occur by condensation of the steam in connecting piping and particularly in the test vessel.

The flow equations, correction factors, and procedures for calculations incorporated in Form 5-5.2 are in accordance with ASME PTC 19.5.

Form 5-5.2 should be used for recording the data and computing the results. The first eight items on this form are primarily for identification purposes. Form 5-5.2 proceeds through the trial-flow calculation in order to evaluate the proper factors and goes on to Item 28, which provides the flow rate of steam at the reference condition in pounds per hour.

Items 29 through 38 transfer and adjust the meter flow to the flow through the valve. Item 35 and its use in calculating the valve-relieving capacity assumes the meter calorimeter's sampling tube is downstream of the meter. If this is not the case, the subtraction should not be made, since the correction shown is to account for metered steam not reaching the valve. All values used are corrected to the reference condition.

5-5.3 Liquids — Flowmeter Method

This technique meters the liquid flow upstream of the valve under test. Care must be taken that all the metered liquid passes through the valve or is accounted for in the calculations.

The flow equations, correction factors, and procedures for calculations incorporated in Form 5-5.3 are in accordance with ASME PTC 19.5.

Form 5-5.3 should be used for recording data and computing the results. The first eight items on this form are primarily for identification purposes. The form proceeds through the trial flow calculation in order to evaluate the proper factors and goes on to Item 26, the measured relieving capacity through the meter at the meter conditions.

Items 27 through 33 provide the data and equation to calculate the relieving capacity at a reference condition if it is specified by the test. The evaluation assumes no change in fluid temperature between the meter and valve inlet.

5-5.4 Air or Gas — Flowmeter Method

This technique meters the gas flow upstream of the valve under test. Care must be taken that all the metered gas passes through the valve or is accounted for in the calculations.

The flow equations, correction factors, and procedures for calculations incorporated in Form 5-5.4 are in accordance with ASME PTC 19.5.

Form 5-5.4 should be used for recording the data and computing the results. The first 12 items on this form are primarily for identification purposes. Form 5-5.4 proceeds through the trial flow calculation to be able to evaluate the proper factors for refinement, through the measured capacity in pounds per hour (Item 25), and on to the flow rate through the meter in cubic feet per minute at some prespecified base condition.

Items 35 through 40 then provide for the calculation of the flow through the valve in cubic feet per minute at a reference inlet condition.

5-5.5 Air or Gas — Sonic-Flow Method

This technique meters the gas flow upstream of the valve under test. Care must be taken that all the metered gas passes through the valve or is accounted for in the calculations.

The flow equations, flow functions, correction factors, and procedures for calculation incorporated in Form 5-5.5 are in accordance with PTC 19.5.

The use of Form 5-5.5 is recommended for either air or gas, and, with the addition of basic data and valve identification, the form follows the procedure of ASME PTC 19.5.

This calculation follows through to evaluate the flow through the meter (Item 23) in pounds per hour.

Items 24 through 30 are then used to determine the flow through the valve in cubic feet per minute at a reference condition.

5-5.6 Fuel-Gas Flow — Flowmeter Method

This technique meters the gas flow upstream of the valve under test. Care must be taken that all of the metered gas passes through the valve or is accounted for in the calculations.

The flow equations, correction factors, and procedures for calculation incorporated in Form 5-5.6 are in accordance with ASME PTC 19.5.

Form 5-5.6 should be used for recording the data and computing the results. The first 12 items on this form are primarily for identification purposes.

Form 5-5.6 proceeds through the trial-flow calculation to be able to evaluate the proper factors for refinement, through the measured capacity in cubic feet per hour

Copyright ASME International
Provided by IHS under license with ASME
No reproduction or networking permitted without license from IHS

Order Number: 02005095
Sold to:LHIP CO LTD [700166107362],
2014-04-15 08:26:03 UTC

at some prespecified base condition converted from the required pounds per hour (Item 32).

Items 35 through 40 provide for the calculation of the flow through the valve in cubic feet per minute at a reference inlet condition.

5-5.7 Air or Gas — Nonreclosing Pressure Relief Device Flow Resistance Method

This technique measures the resistance due to the presence of a nonreclosing pressure relief device in a piping system. It is used in conjunction with either the flowmeter or sonic-flow methods described in paras. 5-5.4 or 5-5.5, respectively.

Form 5-5.7 should be used for recording the data and computing the results. The first 17 items on this form are for identification purposes and listing of the measured variables. Item 6, Measured relieving capacity, is obtained from either Form 5-5.4 or 5-5.5. Care must be taken that all of the metered gas passes through the test arrangement (see Fig. 4-6-1) or is accounted for in the calculations.

The remaining items on Form 5-5.7 are used to determine the resistance factor between each of the established pressure taps. An individual flow resistance associated with the nonreclosing pressure relief device is then calculated from these results.

Two test checks must be done to verify the test results.

First, verify that the value $K_{C\text{-}D}$ is within 3% of the value $K_{A\text{-}B}$. If not, verify that the test arrangement is properly set up. Next, run a calibration test with no nonreclosing pressure relief device installed to verify that the value $K_{C\text{-}D}$ is within 3% of the value $K_{A\text{-}B}$. If so, calculate the resistance factor $K_{B\text{-}D} = K_D - K_B$ and the pipe length $L_{B\text{-}D} = L_D - L_B$. Complete the nonreclosing pressure relief device individual flow resistance calculation, replacing $K_{B\text{-}C}$, $K_{\text{pipe B-C}}$, and $L_{B\text{-}C}$ with $K_{B\text{-}D}$, $K_{\text{pipe B-D}}$, and $L_{B\text{-}D}$, respectively, in eqs. 34 and 35. This is done since the air turbulence caused by the nonreclosing pressure relief device is affecting the true pressure reading of tap C.

Second, verify that the calculated pipe roughness from eq. 33 is within the range 0.0018 to 0.00006. This is the range for schedule 40 clean commercial pipe.

yright ASME International
vided by IHS under license with ASME
eproduction or networking permitted without license from IHS

Order Number: 02005095
Sold to:LHIP CO LTD [700166107362],
2014-04-15 08:26:03 UTC

TEST REPORT FORM 5-5.1 PRESSURE RELIEF DEVICE TESTED WITH STEAM AND WATER
Observed Data and Computed Results — Weighed-Water Method

(1) Test number
(2) Test date
(3) Manufacturer's name

Measured Device Dimensions

Valve	Nonreclosing Devices
(4) Bore diameter, in. (d_b)	(4) Minimum holder bore diameter, in. (d_b)
(5) Seat diameter, in. (d_s)	(5) Minimum net flow area, in.^{2} (a)
(6) Seat angle, deg	
(7) Valve-disk lift, in. (l)	
(8) Actual discharge area, in.^{2} (a_d)	

Observed Data

(9) Length of test, min (t)
(10) Mass of water or condensate, lbm (w)
(11) Valve-steam leakage, lbm/hr (w_{vl})
(12) Condenser leakage, lbm/hr (w_{cl})

STEAM
Observed Data and Computed Results at the Device Inlet

(13) Set pressure, psig (P_{set})
(14) Flow rating pressure, psia (P_f)
(15) Back pressure, psig (P_o)
(16) Fluid temperature at the calorimeter, °F (T_{cal})
(17) Percent quality or deg superheat
(18) Specific volume at reference condition, ft^3/lbm (V_{ref})
(19) Specific volume at inlet conditions, ft^3/lbm (V_{act})
(20) Measured relieving capacity adjusted to the reference condition, lbm/hr

$$W_h = \frac{60 \times w}{t}\sqrt{\frac{V_{act}}{V_{ref}}} + w_{vl} - w_{cl}$$

WATER
Observed Data and Computed Results at the Device Inlet

(21) Set pressure, psig (P_{set})
(22) Flow rating pressure, psia (P_f)
(23) Back pressure, psig (P_o)
(24) Fluid temperature, °F (T)
(25) Density of water at inlet conditions, lbm/ft^3 (ρ_{act})
(26) Density of water at reference condition, lbm/ft^3 (ρ_{ref})
(27) Measured relieving capacity, lbm/hr

$$W_h = \frac{60 \times w}{t} + w_{vl}$$

(28) Relieving capacity adjusted to water at reference condition, lbm/hr

$$W_r = W_h \times \sqrt{\frac{\rho_{ref}}{\rho_{act}}}$$

(29) Relieving capacity in gpm of water at reference condition (U.S. gallons), Q (gpm)

$$Q = 0.1247\,\frac{W_r}{\rho_{ref}}$$

Copyright ASME International
Provided by IHS under license with ASME
No reproduction or networking permitted without license from IHS

Order Number: 02005095
Sold to:LHIP CO LTD [700166107362],
2014-04-15 08:26:03 UTC

TEST REPORT FORM 5-5.2 PRESSURE RELIEF DEVICE TESTED WITH STEAM
Observed Data and Computed Results — Flowmeter Method

(1) Test number
(2) Test date
(3) Manufacturer's name

Measured Device Dimensions

Valve	Nonreclosing Devices
(4) Bore diameter, in. (d_b)	(4) Minimum holder bore diameter, in. (d_b)
(5) Seat diameter, in. (d_s)	(5) Minimum net flow area, in.^{2} (a)
(6) Seat angle, deg	
(7) Valve-disk lift, in. (l)	
(8) Actual discharge area, in.^{2} (a_d)	

Flowmeter Calculations

(9) Internal diameter of meter run pipe, in. (D)
(10) Meter-bore diameter, in. (d)
(11) Meter-bore diameter squared, in.^{2} (d^2)
(12) Beta ratio ($\beta = d/D$)
(13) Trial flow coefficient (K_o)
(14) Differential pressure at the meter, inches of water (h_w)
(15) Barometric pressure, psia (P_b)
(16) Static pressure at the meter calorimeter, psia (P_m)
(17) Fluid temperature at the meter calorimeter, °F ($T_{cal,\ meter}$)
(18) Percent quality or deg superheat
(19) Area factor for thermal expansion (F_a)
(20) Expansion factor (Y)
(21) Specific volume at flowing conditions at the meter, ft^3/lbm ($V_{act,\ meter}$)
(22) Specific volume at reference conditions at the meter, ft^3/lbm ($V_{ref,\ meter}$)
(23) Trial flow rate, lbm/hr

$$W_t = 358.93 \times d^2 \times K_o \times F_a \times Y \times \sqrt{\frac{h_w}{V_{act,\ meter}}}$$

(24) Viscosity, lbm/ft-sec (μ)
(25) Reynolds number

$$R_D = \frac{0.00424 \times W_h}{(D)(\mu)}$$

(26) Orifice plate discharge coefficient (C)

(27) Flow coefficient

$$K = \frac{C}{\sqrt{1 - \beta^4}}$$

(28) Flow rate (lbm/hr)

$$W_h = \frac{W_t \times K}{K_o} \sqrt{\frac{V_{act,\ meter}}{V_{ref,\ meter}}}$$

Observed Data and Computed Results at the Device Inlet

(29) Set pressure, psig (P_{set}) (burst pressure for nonreclosing device)
(30) Flow-rating pressure, psia (P_f)
(31) Fluid temperature at the test drum calorimeter, °F ($T_{cal,\ drum}$)
(32) Percent quality or deg superheat

yright ASME International
vided by IHS under license with ASME
eproduction or networking permitted without license from IHS

Order Number: 02005095
Sold to:LHIP CO LTD [700166107362],
2014-04-15 08:26:03 UTC

TEST REPORT FORM 5-5.2 PRESSURE RELIEF DEVICE TESTED WITH STEAM (CONT'D)
Observed Data and Computed Results — Flowmeter Method

(33) Specific volume at reference condition, ft^3/lbm ($V_{ref,\ drum}$)
(34) Specific volume at inlet conditions, ft^3/lbm ($V_{act,\ drum}$)
(35) Meter calorimeter flow, lbm/hr (W_{mc})
(36) Meter calorimeter flow adjusted to the reference condition, lbm/hr

$$W_{cal,\ meter} = W_{mc}\sqrt{\frac{V_{act,\ meter}}{V_{ref,\ meter}}}$$

(37) Test-drum calorimeter flow, lbm/hr (W_{dc})
(38) Test-drum calorimeter flow adjusted to the reference condition, lbm/hr

$$W_{cal,\ drum} = W_{dc}\sqrt{\frac{V_{act,\ drum}}{V_{ref,\ drum}}}$$

(39) Test-drum drainage, lbm/hr (W_{dr})
(40) Measured relieving capacity adjusted to the reference condition, lbm/hr

$$W_c = W_h\sqrt{\frac{V_{act,\ drum}}{V_{ref,\ drum}}} - W_{cal,\ meter} - W_{cal,\ drum} - W_{dr}$$

Copyright ASME International
Provided by IHS under license with ASME
No reproduction or networking permitted without license from IHS

Order Number: 02005095
Sold to:LHIP CO LTD [700166107362],
2014-04-15 08:26:03 UTC

TEST REPORT FORM 5-5.3 PRESSURE RELIEF DEVICE TESTED WITH LIQUIDS
Observed Data and Computed Results — Flowmeter Method

(1) Test number
(2) Test date
(3) Manufacturer's name

Measured Device Dimensions

Valve	Nonreclosing Devices
(4) Bore diameter, in. (d_b)	(4) Minimum holder bore diameter, in. (d_b)
(5) Seat diameter, in. (d_s)	(5) Minimum net flow area, in.^{2} (a)
(6) Seat angle, deg	
(7) Valve-disk lift, in. (l)	
(8) Actual discharge area, in.^{2} (a_d)	

Flowmeter Calculations

(9) Internal diameter of meter run pipe, in. (D)
(10) Meter-bore diameter, in. (d)
(11) Meter-bore diameter squared, in.^{2} (d^2)
(12) Beta ratio ($\beta = d/D$)
(13) Temperature upstream of the meter, °F (T_m)
(14) Differential pressure at the meter, inches of water (h_w)
(15) Barometric pressure, psia (P_b)
(16) Static pressure at the meter, psia (P_m)
(17) Fluid temperature at the meter, °F (T_m)
(18) Area factor for thermal expansion (F_a)
(19) Trial flow coefficient (K_o)
(20) Fluid density at meter inlet, lbm/ft^3 (ρ_m)
(21) Trial flow rate, lbm/hr (W_t)

$$W_t = 358.93 \times d^2 \times F_a \times K_o \sqrt{h_w \times \rho_m}$$

(22) Viscosity, lbm/ft-sec (μ)
(23) Reynolds number

$$R_D = \frac{0.00424 \times W_h}{(D)(\mu)}$$

(24) Orifice plate discharge coefficient (C)

(25) Flow coefficient

$$K = \frac{C}{\sqrt{1 - \beta^4}}$$

(26) Measured relieving capacity, lbm/hr

$$W_h = W_t \times K/K_o$$

Observed Data and Computed Results at the Device Inlet

(27) Set pressure, psig (P_{set}) (burst pressure for nonreclosing device)
(28) Flow-rating pressure, psig (P_f)
(29) Back pressure, psig (P_o)
(30) Fluid temperature, °F (T_v)
(31) Density of liquid at inlet conditions, lbm/ft^3 (ρ_{act})
(32) Density of liquid at reference condition, lbm/ft^3 (ρ_{ref})
(33) Relieving capacity adjusted to liquid at reference condition, lbm/hr

$$W_r = W_h \sqrt{\rho_{ref}/\rho_{act}}$$

Copyright ASME International
Provided by IHS under license with ASME
Not for reproduction or networking permitted without license from IHS
Order Number: 02005095
Sold to:LHIP CO LTD [700166107362],
2014-04-15 08:26:03 UTC

TEST REPORT FORM 5-5.4 PRESSURE RELIEF DEVICE TESTED WITH AIR OR GAS
Observed Data and Computed Results — Flowmeter Method

(1) Test number
(2) Test date
(3) Manufacturer's name
(4) Test fluid
(5) Specific gravity (ideal) (S_g)
(6) Ratio of specific heats (k)
(7) Molecular weight (M_w)

Measured Device Dimensions

Valves	Nonreclosing Devices
(8) Bore diameter, in.	(8) Minimum holder bore diameter, in. (d_b)
(9) Seat diameter, in.	(9) Minimum net flow area, in.^{2} (a)
(10) Seat angle, deg	
(11) Valve-disk lift, in. (l)	
(12) Actual discharge area, in.^{2} (a_d)	

Flowmeter Calculations

(13) Internal diameter of meter run pipe, in. (D)
(14) Meter-bore diameter, in. (d)
(15) Meter-bore diameter squared, in.^{2} (d^2)
(16) Beta ratio ($\beta = d/D$)
(17) Trial flow coefficient (K_o)
(18) Differential pressure at the meter, inches of water (h_w)
(19) Barometric pressure, psia (P_b)
(20) Static pressure at the meter, psia (P_m)
(21) Fluid temperature at the meter, °F (T_m)
(22) Expansion factor (Y)
(23) Area factor for thermal expansion (F_a)
(24) Fluid density at meter inlet, lbm/ft^3 (ρ_m)
(25) Trial flow rate (W_t), lbm/hr

$$W_t = 358.93 \times d^2 \times K_o \times Y \times F_a \sqrt{h_w \times \rho_m}$$

(26) Viscosity, lbm/ft-sec (μ)
(27) Reynolds number

$$R_D = \frac{0.00424 \times W_t}{(D)(\mu)}$$

(28) Orifice plate discharge coefficient (C)

(29) Flow coefficient

$$K = \frac{C}{\sqrt{1 - \beta^4}}$$

(30) Measured relieving capacity, lbm/hr

$$W_h = \frac{(W_t)\ (k)}{k_a}$$

(31) Base pressure, psia (P_B)
(32) Base temperature, °F (T_B)
(33) Density of dry air at 14.696 psia and at the base temperature, lbm/ft^3 (ρ_s)
(34) Density at base condition, lbm/ft^3

$$\rho_b = S_g \times P_B \rho_s / 14.696$$

Copyright ASME International
Provided by IHS under license with ASME
No reproduction or networking permitted without license from IHS

Order Number: 02005095
Sold to:LHIP CO LTD [700166107362],
2014-04-15 08:26:03 UTC

TEST REPORT FORM 5-5.4 PRESSURE RELIEF DEVICE TESTED WITH AIR OR GAS (CONT'D)
Observed Data and Computed Results — Flowmeter Method

Observed Data and Computed Results at the Device Inlet

(35) Volumetric rate at base condition at the meter, cfm

$$q_b = \frac{w_t}{(60)\ (P_B)}$$

(36) Set pressure, psig (P_{set}) (burst pressure for nonreclosing device)
(37) Flow-rating pressure, psig (P_f)
(38) Temperature at the valve inlet, absolute °R (T_v)
(39) Reference temperature at the valve inlet, absolute °R (T_r)
(40) Valve inlet temperature correction

$$C = \sqrt{T_v / T_R}$$

(41) Valve capacity at reference inlet temperature, cfm

$$q_r = q_b \times C$$

yright ASME International
vided by IHS under license with ASME
eproduction or networking permitted without license from IHS

Order Number: 02005095
Sold to:LHIP CO LTD [700166107362],
2014-04-15 08:26:03 UTC

TEST REPORT FORM 5-5.5 PRESSURE RELIEF DEVICE TESTED WITH AIR OR GAS
Observed Data and Computed Results — Sonic-Flow Method

(1) Test number
(2) Test date
(3) Manufacturer's name
(4) Test fluid
(5) Specific gravity (ideal) (S_g)
(6) Ratio of specific heats (k)
(7) Molecular weight (M_w)

Measured Device Dimensions

Valves	Nonreclosing Devices
(8) Bore diameter, in.	(8) Minimum holder bore diameter, in. (d_b)
(9) Seat diameter, in.	(9) Minimum net flow area, in.^{2} (a)
(10) Seat angle, deg	
(11) Valve-disk lift (l)	
(12) Actual discharge area, in.^{2} (a_d)	

Flowmeter Calculations

(13) Internal diameter of meter run pipe, in. (D)
(14) Meter-bore diameter, in. (d)
(15) Beta ratio ($\beta = d/D$)
(16) Meter discharge coefficient at sonic-flow conditions (C)
(17) Meter-bore area, in.^{2} (a_m)
(18) Ideal gas sonic-flow functions (ϕ^*_i)
(19) Ratio of real gas to ideal gas sonic-flow functions (ϕ^*/ϕ^*_i)
(20) Barometric pressure, psia (P_b)
(21) Meter inlet stagnation pressure, psia (P_s)
(22) Meter inlet stagnation temperature, absolute °R (T_s)
(23) Measured relieving capacity, lbm/hr

$$W_h = 3{,}600 \times C \times a_m \times \phi^*_i \times \phi^*/\phi^*_i \times \frac{P_s}{\sqrt{T_s}}$$

Observed Data and Computed Results at the Device Inlet

(24) Set pressure, psig (P_{set}) (burst pressure for nonreclosing device)
(25) Flow-rating pressure, psig (P_f)
(26) Temperature at the valve inlet, absolute °R (T_v)
(27) Reference temperature at the valve inlet, absolute °R (T_r)
(28) Density of dry air at 14.696 psia and reference temperature, lbm/ft^3 (ρ_{std})
(29) Density of fluid at reference condition, lbm/ft^3

$$\rho_{ref} = S_g \times P_f \times \frac{\rho_{std}}{14.696}$$

(30) Valve capacity at reference condition, cfm

$$q_r = \frac{W_h}{60 \times \rho_{ref}} \sqrt{T_v / T_r}$$

Copyright ASME International
Provided by IHS under license with ASME
No reproduction or networking permitted without license from IHS

Order Number: 02005095
Sold to:LHIP CO LTD [700166107362],
2014-04-15 08:26:03 UTC

TEST REPORT 5-5.6 PRESSURE RELIEF DEVICE TESTED WITH FUEL GAS
Observed Data and Computed Results — Flowmeter Method

(1) Test number
(2) Test date
(3) Manufacturer's name
(4) Test fluid
(5) Specific gravity (ideal) (S_g)
(6) Ratio of specific heats (k)
(7) Molecular weight (M_w)

Measured Device Dimensions

Valve	Nonreclosing Devices
(8) Bore diameter, in.	(8) Minimum holder bore diameter, in. (d_b)
(9) Seat diameter, in.	(9) Minimum net flow area, in.^{2} (a)
(10) Seat angle, deg	
(11) Valve-disk lift (l)	
(12) Actual discharge area, in.^{2} (a_d)	

Flowmeter Calculations

(13) Internal diameter of meter run pipe, in. (D)
(14) Meter-bore diameter, in. (d)
(15) Meter-bore diameter squared, in.^{2} (d^2)
(16) Beta ratio ($\beta = d/D$)
(17) Trial flow coefficient (K_o)
(18) Differential pressure at the meter, inches of water (h_w)
(19) Barometric pressure, psia (P)
(20) Static pressure at the meter, psia (P_m)
(21) Fluid temperature at the meter, absolute °R (T_m)
(22) Expansion factor (Y)
(23) Area factor for thermal expansion, absolute °R (F_a)
(24) Compressibility at meter (Z)
(25) Density, lbm/ft^3

$$\rho_m = \frac{(2.69991)\ (S_g)\ (P_m)}{(T_m)\ (Z)}$$

(26) Trial flow rate, lbm/hr

$$W_t = 358.93 \times d^2 \times k_o \times Y \times F_g \sqrt{h_w \times \rho_m}$$

(27) Viscosity, lbm/ft-sec (μ)
(28) Reynolds number

$$R_D = \frac{0.00424 \times W_t}{(D)\ (\mu)}$$

(29) Orifice plate discharge coefficient (C)

(30) Flow coefficient

$$K = \frac{C}{\sqrt{1 - \beta^4}}$$

(31) Base pressure, psia (P_a)
(32) Base temperature, absolute °R (T_b)
(33) Base compressibility factor (Z_b)

opyright ASME International
rovided by IHS under license with ASME
o reproduction or networking permitted without license from IHS

Order Number: 02005095
Sold to:LHIP CO LTD [700166107362],
2014-04-15 08:26:03 UTC

TEST REPORT 5-5.6 PRESSURE RELIEF DEVICE TESTED WITH FUEL GAS (CONT'D)
Observed Data and Computed Results — Flowmeter Method

(34) Density at base temperature and pressure

$$p_B = \frac{2.6991 \times S_g \times P_B}{T_b \times Z_b}$$

(35) Relieving capacity at base condition, cfh

$$q_b = \frac{(W_t)\ (K)}{(K_o)\ (\rho_B)}$$

Observed Data and Computed Results at the Device Inlet

(36) Set pressure, psig (P_{set}) (burst pressure for nonreclosing device)
(37) Flow-rating pressure, psig (P_f)
(38) Temperature at the valve inlet, absolute °R (T_v)
(39) Reference temperature at the valve inlet, absolute °R (T_r)
(40) Valve inlet temperature correction

$$C = \sqrt{T_v / T_R}$$

(41) Valve capacity at reference inlet temperature, cfm

$$q_r = \frac{(q_b)\ (c)}{(60)}$$

Copyright ASME International
Provided by IHS under license with ASME
No reproduction or networking permitted without license from IHS

Order Number: 02005095
Sold to:LHIP CO LTD [700166107362],
2014-04-15 08:26:03 UTC

TEST REPORT FORM 5-5.7 NONRECLOSING PRESSURE RELIEF DEVICE TESTED WITH AIR
Observed Data and Computed Results — Flow Resistance

(1) Test number
(2) Test date
(3) Manufacturer's name
(4) Ratio of specific heats (k)
(5) Molecular weight (M_w)
(6) Measured relieving capacity, lbm/hr (W_h) (from Form 5-5.4 or 5-5.5)
(7) Base pressure, psia (P_B)
(8) Base temperature, absolute °R (T_o)
(9) Test rig inside diameter, ft (D)
(10) Length between taps A and B, ft ($L_{A\text{-}B}$)
(11) Length between taps B and C, ft ($L_{B\text{-}C}$)
(12) Length between taps C and D, ft ($L_{C\text{-}D}$)
(13) Pressure at tap B, psia (P_{tapB})
(14) Differential pressure between taps A and B, psia ($\Delta P_{A\text{-}B}$)
(15) Differential pressure between taps B and C, psia ($\Delta P_{B\text{-}C}$)
(16) Differential pressure between taps C and D, psia ($\Delta P_{C\text{-}D}$)

Flow Resistance Factor Calculation

(17) Mass velocity, lb/ft^2-sec (G)

$$G = W_h/(3600 \times \pi \times D^2/4)$$

(18) Mach number at pipe entrance

$$M_1 = G/144\, P_B \sqrt{\frac{Y_1^{[(k+1)/(k-1)]}}{32.2 \times M_w \times k/(1544 \times T_o)}}$$

Solve by iteration

$$Y_1 = 1 + \frac{(k-1) \times M_1^2}{2}$$

(19) Pressure at pipe entrance

$$P_1 = P_B \left(\frac{2}{2 + (k-1) \times M_1^2}\right)^{\left(\frac{k}{k-1}\right)}$$

(20) Temperature at pipe entrance

$$T_1 = T_o \times (P_1/P_B)^{(k-1)/k}$$

Calculate total resistance factor at each pressure tap A, B, C, and D. Repeat steps (21) through (26) for each tap.

(21) Temperature at pressure tap, absolute °R

$$T_{tap} = T_1 \left[\frac{-1 + \sqrt{1 + 2 \times (k-1) \times M_1^2 \times (P_1/P_{tap})^2 \times (1 + (k-1) \times M_1^2/2)}}{(k-1) \times M_1^2 \times (P_1/P_{tap})^2}\right]$$

(22) Sonic velocity at pressure tap, ft/sec

$$C_{tap} = \sqrt{32.2 \times k \times 1544 \times T_{tap}/M_w}$$

(23) Specific volume at pressure tap, ft^3/lbm

$$V_{tap} = (1544 \times T_{tap})/(M_w \times 144 P_{tap})$$

(24) Mach number at pressure tap

$$M_{tap} = G \times V_{tap}/C_{tap}$$

(25) Expansion factor at pressure tap

$$Y_{tap} = 1 + \frac{(k-1) \times (M_{tap})^2}{2}$$

opyright ASME International
rovided by IHS under license with ASME
o reproduction or networking permitted without license from IHS

Order Number: 02005095
Sold to:LHIP CO LTD [700166107362],
2014-04-15 08:26:03 UTC

TEST REPORT FORM 5-5.7 NONRECLOSING PRESSURE RELIEF DEVICE TESTED WITH AIR (CONT'D)
Observed Data and Computed Results — Flow Resistance

(26) Total resistance factor to pressure tap

$$K_{tap} = \frac{1/M_1^2 - 1/(M_{tap})^2 - [(k+1)/2] \times \ln [(M_{tap}^2 \times Y_1)/(M_1^2 \times Y_{tap})]}{k}$$

(27) Resistance factor between pressure taps A and B

$$K_{A\text{-}B} = K_B - K_A$$

(28) Resistance factor between pressure taps B and C

$$K_{B\text{-}C} = K_C - K_B$$

(29) Resistance factor between pressure taps C and D

$$K_{C\text{-}D} = K_D - K_C$$

(30) Friction factor

$$f = K_{A\text{-}B} \times D/(4 \times L_{A\text{-}B})$$

(31) Obtain the viscosity of air at T_B and P_B, μ (centipoise)

(32) Reynolds number

$$N_{Re} = D \times G/(\mu/1488)$$

(33) Pipe roughness, in.

$$E = 44.4 \times D \times [10^{(-1/(4 \times \sqrt{f}))} - 1.256/(N_{Re} \times \sqrt{f})]$$

(34) Pipe resistance factor between pressure taps B and C

$$K_{pipe\ B\text{-}C} = \frac{4fL_{B\text{-}C}}{D}$$

(35) Test object individual flow resistance

$$K_{Ri} = K_{B\text{-}C} - K_{pipe\ B\text{-}C}$$

GENERAL NOTE: Equations for calculations are in accordance with Levenspiel paper, Lapple paper, Perry Handbook, and Colebrook equation.

Colebrook. "Perry's Chemical Engineer's Handbook," Sixth Ed. New York: McGraw-Hill Book Co. 1984.
Green, P. W. (Ed.) "Perry's Chemical Engineer's Handbook," Sixth Ed. New York: McGraw-Hill Book Co. 1984.
Lapple, C. E. "Isothermal and Adiabatic Flow of Compressible Fluids." Trans. AIChE, 39, pp. 385–432. 1943.
Levenspiel, O. "The Discharge of Gases from a Reservoir Through a Pipe." AIChE Journal 23:3, pp. 402–403. May 1977.

Copyright ASME International
Provided by IHS under license with ASME
No reproduction or networking permitted without license from IHS

Order Number: 02005095
Sold to:LHIP CO LTD [700166107362],
2014-04-15 08:26:03 UTC

Section 6
Test Summary Report Form

6-1 GENERAL INSTRUCTIONS

(a) The Report of Test shall be prepared for the purpose of formally recording observed data and computed results. It shall contain sufficient supporting information to prove that all objectives of any tests conducted in accordance with this Code have been attained.

(b) The procedures described in Section 5 are recommended for use in computing the test results.

(c) The Report of Test shall include Parts I to IV as listed below. It may also be appropriate to include any of the remaining sections, depending on the circumstances or by agreement of multiple parties of the test.

I	General Information
II	Summary of Results
III	Description of Device Under Test
IV	Observed Data and Computed Results
V	Test Conditions and Corrections Agreements
VI	Test Methods and Procedures
VII	Supporting Data
VIII	Graphical Presentation of Back-Pressure Test Results

The following outline gives a discussion of each part of the Test Report.

6-2 PART I: GENERAL INFORMATION

This Part shall include the following items:

(a) date of test

(b) location of test facilities

(c) device manufacturer's name

(d) manufacturer's serial number and complete identification of device

(e) inlet and outlet connections (stating size, pressure ratings, and type, such as screwed, flanged, etc.)

(f) test conducted by

(g) representatives of interested parties

(h) object of test

(i) fluid through device (wherever applicable give name, molecular weight, specific gravity, and ratio of specific heats)

6-3 PART II: SUMMARY OF RESULTS

This Part shall include those quantities and characteristics that describe the performance of the device at test conditions. The Test Summary Report Form for the particular test shall list the quantities, characteristics, and units of measurement required for the report.

6-4 PART III: DESCRIPTION OF DEVICE UNDER TEST

This Part may include assembly drawings, manufacturing drawings, and measured dimensions. Manufacturing drawings for these parts may be submitted with the assembly drawing. The dimensions of these parts shall include the following, if applicable:

(a) bore diameter, in.

(b) seat diameter, in.

(c) seat angle, deg

(d) inlet opening diameter, in.

(e) ratio of throat diameter to the diameter of the inlet opening

(f) actual discharge area, $in.^2$

Forms 6-5.1 through 6-5.4 are to be used to record this information for steam, liquids and water, or air, gas, or fuel gas.

6.5 PART IV: OBSERVED DATA AND COMPUTED RESULTS

This Part shall include a record of data and calculations required for the results of the tests. Computed results shall include final flow measurement uncertainty. The data shall have been corrected for instrument calibrations and conditions prevailing for each test run.

The calculations for measured relieving capacity may be made in accordance with the procedures in Section 5 and reported in the recommended Report of Test using Forms 6-5.1 through 6-5.4 as applicable. These forms follow this Section. Calculation forms are provided in Section 5 for the following listed fluids:

(a) steam

(b) air or gas

(c) fuel gas

(d) liquids

(e) water

6-6 PART V: TEST CONDITIONS AND CORRECTIONS AGREEMENTS

Operating conditions, such as the following, that have been agreed upon prior to the test shall be reported for each test:

(a) device-maximum-inlet pressure

Copyright ASME International
Provided by IHS under license with ASME
No reproduction or networking permitted without license from IHS

Order Number: 02005095
Sold to:LHIP CO LTD [700166107362],
2014-04-15 08:26:03 UTC

(*b*) device-inlet temperature
(*c*) setting of device
(*d*) back pressure (built-up and/or superimposed)

6-7 PART VI: TEST METHODS AND PROCEDURES

This Part shall include a detailed description of the instruments and apparatus used to measure the various quantities and procedures for observing the mechanical characteristics of the device under test.

6-8 PART VII: SUPPORTING DATA

This Part shall include pertinent material supplementing data presented elsewhere in the test report, whereby an independent verification of the report results can be made. This material may include, but not necessarily be limited to the following:

(*a*) instrument calibration records
(*b*) detailed log sheets
(*c*) sample calculations

6-9 PART VIII: GRAPHICAL PRESENTATION OF BACK-PRESSURE TEST RESULTS

Where a series of tests have been made with several back pressures for a given opening pressure, the test results can be presented by plotting curves, such as the following:

(*a*) *Abscissa:* back pressures in percent of the opening pressure at atmospheric back pressure

Ordinate: percent variation of opening pressures from the opening pressure at atmospheric back pressure

(*b*) *Abscissa:* back pressures in percent of the relieving pressure at atmospheric back pressure

Ordinate: relieving capacities in percent of relieving capacity at atmospheric back pressure

(*c*) *Abscissa:* back pressures in percent of the opening pressure at atmospheric back pressure

Ordinate: percent variation of closing pressures from the closing pressure at atmospheric back pressure

Copyright ASME International
Provided by IHS under license with ASME
No reproduction or networking permitted without license from IHS

Order Number: 02005095
Sold to:LHIP CO LTD [700166107362],
2014-04-15 08:26:03 UTC

TEST SUMMARY REPORT FORM 6-5.1
Pressure and Relief Valve Performance Test Report
STEAM

General Information

(1) Test number
(2) Test date
(3) Location
(4) Manufacturer's name and address
(5a) Valve type or model number
(5b) Valve serial or identification number
(5c) Inlet connection (size, pressure rating, and type)
(5d) Outlet connection (size, pressure rating, and type)
(5e) Stamped pressure and tolerance, psig
(6) Test objective

Summary of Test Results

(7) Simmer, psig (factory setting)
(8) Simmer, psig (reset)
(9) Set pressure, psig (factory setting)
(10) Set pressure, psig (reset)
(11) Reseating pressure, psig (factory setting)
(12) Reseating pressure, psig (reset)
(13) Blowdown, psi (factory setting)
(14) Blowdown, psi (reset)
(15) Back pressure, psig, superimposed and/or built-up
(16) Flow-rating pressure (valve inlet), psig
(17) Valve-disk lift, in.
(18) Measured relieving capacity, lbm/hr
(19) Final flow measurement uncertainty

Measured Valve Dimensions

(20) Bore diameter, in.
(21) Seat diameter, in.
(22) Seat angle, deg
(23) Valve-inlet-opening diameter, in.
(24) Ratio of valve disk lift to bore diameter
(25) Ratio of bore diameter to the diameter of the valve-inlet opening
(26) Actual discharge area, $in.^2$
(27) Remark and conclusions concerning the objective of the test and applicable items, such as chatter, flutter, vibration, etc.

Test Supervisor (Signed) _____ Date _____

Copyright ASME International
Provided by IHS under license with ASME
No reproduction or networking permitted without license from IHS

Order Number: 02005095
Sold to:LHIP CO LTD [700166107362],
2014-04-15 08:26:03 UTC

TEST SUMMARY REPORT FORM 6-5.2
Pressure and Relief Valve Performance Test Report
LIQUIDS AND WATER

General Information

(1) Test number
(2) Test date
(3) Location
(4) Manufacturer's name and address
(5a) Valve type or model number
(5b) Valve serial or identification number
(5c) Inlet connection (size, pressure rating, and type)
(5d) Outlet connection (size, pressure rating, and type)
(5e) Stamped pressure, psig
(6) Test objective
(7) Test fluid
(8) Specific gravity (ideal)

Summary of Test Results

(9) Set pressure, psig (factory setting)
(10) Set pressure, psig (reset)
(11) Reseating pressure, psig (factory setting)
(12) Reseating pressure, psig (reset)
(13) Back pressure, psig, superimposed and/or built-up
(14) Flow-rating pressure (valve inlet), psig
(15) Valve-disk lift, in.
(16) Measured relieving capacity, lbm/hr
(17) Final flow measurement uncertainty

Measured Valve Dimensions

(18) Bore diameter, in.
(19) Seat diameter, in.
(20) Seat angle, deg
(21) Valve-inlet-opening diameter, in.
(22) Ratio of valve disk lift to bore diameter
(23) Ratio of bore diameter to the diameter of the valve-inlet opening
(24) Actual discharge area, $in.^2$
(25) Remarks and conclusions concerning the objective of the test and applicable items, such as chatter, flutter, vibration, etc.

Test Supervisor (Signed) _____ Date _____

Copyright ASME International
Provided by IHS under license with ASME
No reproduction or networking permitted without license from IHS

Order Number: 02005095
Sold to:LHIP CO LTD [700166107362],
2014-04-15 08:26:03 UTC

TEST SUMMARY REPORT FORM 6-5.3
Pressure and Relief Valve Performance Test Report
AIR, GAS, OR FUEL GAS

General Information

(1) Test number
(2) Test date
(3) Location
(4) Manufacturer's name and address
(5a) Valve type or model number
(5b) Valve serial or identification number
(5c) Inlet connection (size, pressure rating, and type)
(5d) Outlet connection (size, pressure rating, and type)
(5e) Stamped pressure and tolerance, psig
(6) Test objective
(7) Test fluid
(8) Specific gravity (ideal)
(9) Ratio of specific heats
(10) Molecular weight

Summary of Test Results

(11) Start to discharge, psig (factory setting)
(12) Start to discharge pressure, psig (reset)
(13) Simmer, psig (factory setting)
(14) Simmer, psig (reset)
(15) Set pressure, psig (factory setting)
(16) Set pressure, psig (reset)
(17) Reseating pressure, psig (factory setting)
(18) Reseating pressure, psig (reset)
(19) Resealing pressure, psig (factory setting)
(20) Resealing pressure, psig (reset)
(21) Blowdown, psig (factory setting)
(22) Blowdown, psig (reset)
(23) Back pressure, psig, superimposed and/or built-up
(24) Flow-rating pressure (valve inlet), psig
(25) Valve-disk lift, in.
(26) Measured relieving capacity, lbm/hr
(27) Final flow measurement uncertainty

Measured Valve Dimensions

(28) Bore diameter, in.
(29) Seat diameter, in.
(30) Valve-inlet-opening diameter, in.
(31) Ratio of valve disk lift to bore diameter
(32) Ratio of bore diameter to the diameter of the valve-inlet opening
(33) Actual discharge area, $in.^2$
(34) Remarks and conclusions concerning the objective of the test and applicable items, such as chatter, flutter, vibration, etc.

Test Supervisor (Signed) _____ Date _____

Copyright ASME International
Provided by IHS under license with ASME
No reproduction or networking permitted without license from IHS

Order Number: 02005095
Sold to:LHIP CO LTD [700166107362],
2014-04-15 08:26:03 UTC

TEST SUMMARY REPORT FORM 6-5.4
Nonreclosing Pressure Relief Device Performance Test Report
AIR, GAS, OR FUEL GAS

General Information

(1) Test number
(2) Test date
(3) Location
(4) Manufacturer's name and address
(5a) Device type or model number
(5b) Device lot or identification number
(5c) Connection (size, pressure rating, and type)
(5d) Marked set pressure and tolerance, psig
(5e) Minimum net flow area, $in.^2$ (manufacturer specified)
(6) Test objective
(7a) Test fluid for set pressure
(7b) Test fluid for flow test
(8) Specific gravity (ideal)
(9) Ratio of specific heats
(10) Molecular weight

Summary of Test Results

(11) Set pressure, psig
(12) Flow-rating pressure at device inlet, psig
(13) Resistance factor (K_{Ri})

Measured Device Dimensions

(14) Minimum device bore diameter, in.
(15) Remarks and conclusions concerning the objective of the test and applicable items, such as vibrations, etc.

Test Supervisor (Signed) _____ Date _____

Copyright ASME International
Provided by IHS under license with ASME
No reproduction or networking permitted without license from IHS

Order Number: 02005095
Sold to:LHIP CO LTD [700166107362],
2014-04-15 08:26:03 UTC

PART III
IN-SERVICE AND BENCH TESTING

Section 7
Guiding Principles

7-1 ITEMS ON WHICH AGREEMENT SHALL BE REACHED

The parties to the test shall reach agreement on the following items prior to conducting the test:

(*a*) object of the test

(*b*) parties to the test

(*c*) test site

(*d*) testing fluid

(*e*) methods of measurement, instrumentation, and equipment to be used (calibration of instruments shall be in accordance with subsection 3-7)

(*f*) number, size, type, condition, source, and set pressure of the device(s) to be tested

(*g*) method of determining seat tightness

(*h*) person(s) who shall conduct the test

(*i*) the written test procedure that shall include the observation and readings to be taken and recorded to comply with the object or objectives of the test

7-2 QUALIFICATION OF PERSON CONDUCTING THE TEST

A person who conducts the test shall have a working knowledge of pressure relief device operating characteristics. The person shall have practical experience in the safe and accurate operation of the testing equipment.

7-3 RESPONSIBILITY OF PERSON CONDUCTING THE TEST

A person who meets the qualifications of subsection 7-2 shall be present at all times during the test and shall be solely responsible to ensure that all persons who are involved in taking readings, making pressure and temperature adjustments, or any other function that will affect the test results are fully informed as to the correct method of performing such functions. This person conducting the test shall also be responsible to ensure that the written test procedures are followed. This person shall sign and date the test report, thereby verifying to the best of his knowledge that the report is correct and that the test was conducted in accordance with the written test procedures. This person shall verify that the instruments have been calibrated as required by subsection 7-7.

7-4 TEST APPARATUS

Procedures and arrangement of the test apparatus shall be in accordance with Section 8.

7-5 PRELIMINARY TRAINING

Sufficient training shall be conducted to ensure that operating personnel are completely familiar with the test equipment and their respective assignments.

7-6 SPARE INSTRUMENTS

If intended for use as replacements during the test, spare instruments shall be calibrated in accordance with subsection 7-7.

7-7 CALIBRATION OF INSTRUMENTS

Each instrument used during the test shall be serialized or otherwise positively identified and shall be calibrated against certified equipment having known valid relationships to nationally recognized standards. Each instrument, depending on the type, shall be calibrated in accordance with this Section. Records of instrument calibrations shall be available for review by the interested parties.

7-7.1 Pressure

Pressure-measuring instruments shall be calibrated in accordance with ASME PTC 19.2, Pressure Measurement, within 30 days prior to the tests. Portable pressure-measuring instruments shall be calibrated at a frequency to ensure that measurements are within the uncertainty limits. Calibration of other means of indicating or recording pressure shall be agreed upon by the interested parties.

Copyright ASME International
Provided by IHS under license with ASME
No reproduction or networking permitted without license from IHS

Order Number: 02005095
Sold to:LHIP CO LTD [700166107362],
2014-04-15 08:26:03 UTC

7-7.2 Temperature

Temperature-measuring instruments shall be calibrated in accordance with ASME PTC 19.3, Temperature Measurement. Instruments of the types listed in para. 4-2.1(a), except bimetallic thermometers, shall be calibrated to at least one temperature within a 90-day period preceding the test or series of tests. Bimetallic thermometers shall be calibrated before and after each test or series of tests. Calibration of other means of indicating or recording temperature shall be agreed upon by the interested parties.

7-7.3 Auxiliary Lift-Assist Devices

An auxiliary lift-assist device requires measurements of applied lifting force and system pressure. For calibration of the device for measurement of system pressure, see para. 7-7.1 above. The instrument used for measurement of the applied lifting force shall be calibrated by comparison against a force-measuring standard, such as a calibrated force transducer of higher accuracy or a calibrated force-proving ring. Calibrations shall be performed a minimum of once per year. More frequent calibration should be considered when rugged operating conditions exist.

7-8 ADJUSTMENTS DURING TEST

If adjustments are found to be necessary during in-service or bench testing, a sufficient number of tests shall be performed to determine final operating characteristics.

7-9 RECORDS AND TEST RESULTS

The test records shall include all observations, measurements, instrument readings, and instrument identification (if required) for the objective(s) of the test. The parties of the test shall agree upon the responsibility of record retention and distribution. Corrections to data and corrected values shall be entered separately in the test record. The test shall be reported in accordance with Section 10, Test Summary Report Form.

7-10 MEASUREMENT UNCERTAINTY

A pretest determination shall be performed to determine that the limits of uncertainty of the final measurement specified in Section 1 can be met by the specified instrumentation and procedures. A post-test uncertainty analysis shall also be performed unless the parties to the test agree and verify that the specified instrumentation and procedures, including data scatter, were used and carried out in accordance with the test specification, thereby confirming the post-test validity of the pretest uncertainty determination. A guide for such determination is given in ASME PTC 19.1. These determinations shall be documented by the facility and available for review.

Copyright ASME International
Provided by IHS under license with ASME
No reproduction or networking permitted without license from IHS

Order Number: 02005095
Sold to:LHIP CO LTD [700166107362],
2014-04-15 08:26:03 UTC

Section 8
Instruments and Methods of Measurements

8-1 GENERAL

This Section describes the instruments, methods, procedures, and precautions that shall be used in testing pressure relief devices under this Code. The Performance Test Code Supplements on Instruments and Apparatus provide authoritative general information concerning instruments and their use and may be consulted for such information.

8-2 INSTRUMENTATION

Where measurements of temperature, pressure, or lift are required in this Section, the instrumentation used shall comply with the following specifications.

8-2.1 Temperature

Instructions on thermometers or thermocouples and associated instruments are given in ASME PTC 19.3, except that commercial, metal-encased thermometers shall not be used in tests conducted under this Code. Other means of temperature measurement and indication may be used, provided they are of the same or greater degree of accuracy as for those described therein.

(a) Depending on operating conditions, or convenience, the temperature may be measured with certified or calibrated, liquid-in-glass thermometers, bimetallic thermometers, resistance-type thermometers, or thermocouples. All of the above may be inserted directly into the pipe or wells except for liquid-in-glass thermometers, which must be inserted into wells. The installation of the temperature-measuring device directly into the pipe, without the addition of a well, is desirable for temperatures below 300°F.

(b) The following precautions shall be taken when making any temperature measurements:

(1) No significant quantity of heat shall be transferred by radiation or conduction to or from the temperature-measuring device other than by the temperature of the medium being observed (see ASME PTC 19.3).

(2) The immediate vicinity of the point of insertion and external projecting parts shall be insulated.

(3) The temperature-measuring device shall extend across the centerline in pipes of small diameter or shall be inserted at least 6 in. into the fluid stream in pipes over 12 in. in diameter.

(4) Temperature-measuring devices installed in pipes carrying compressible fluids shall, wherever possible, be installed at locations where the maximum fluid velocity does not exceed 100 ft/sec. Where such an installation is not possible, it may be necessary to correct the temperature readings to the appropriate static or total temperature (see ASME Fluid Meters, para. 1-3-17).

(5) The temperature-measuring devices shall be inserted in locations so as to measure temperatures that are representative of the flowing medium as described under test arrangements.

(c) Thermometer wells, when used, shall be of the type shown in ASME PTC 19.3. They shall be as thin walled and of as small diameter as practicable; their outer surfaces shall be substantially free from corrosion or foreign matter. The well shall be filled with a suitable fluid. Mercury should not be used for this fluid since its very low-vapor pressure presents a serious health hazard to personnel.

(d) Thermocouples, if used, shall have a welded hot junction and must be calibrated together with their extension wires over the anticipated operating range. They shall be constructed of materials suitable for the temperature and fluid being measured. The electromotive force of a thermocouple shall be measured by a potentiometric instrument or millivoltmeter of such precision that the accuracy of the overall system is within the limit specified in subsection 1-3. The cold junction shall be established by an ice bath, reference standard, or compensating circuit built into the potentiometer.

8-2.2 Pressure Measurements

Instructions on pressure gages, water U-tubes, differential gages, and manometers are given in ASME PTC 19.2. Other means of pressure measurements and indication may be used provided they are of the same or greater degree of accuracy as those described therein.

(a) Pressure-measuring stations shall be located in the region where the flow is essentially parallel to the pipe or vessel wall. For the measurement of static gage-pressure differentials below 15 psi, liquid manometers may be used.

(b) Pressure relief device-inlet pressure shall be the static pressure as measured with a pressure tap positioned, as shown in Figs. 8-2.2-1 and 8-2.2-2.

(c) Back pressure shall be the static pressure measured with a pressure tap positioned, as shown in Figs. 4-2.10-2, 4-2.10-4, and 4-6-1.

(d) Proper corrections to the pressure readings shall be made if there is a height of water or other liquid

Copyright ASME International
Provided by IHS under license with ASME
No reproduction or networking permitted without license from IHS

Order Number: 02005095
Sold to:LHIP CO LTD [700166107362],
2014-04-15 08:26:03 UTC

Fig. 8-2.2-1 Recommended Arrangement for Testing Valves With Compressible Fluids

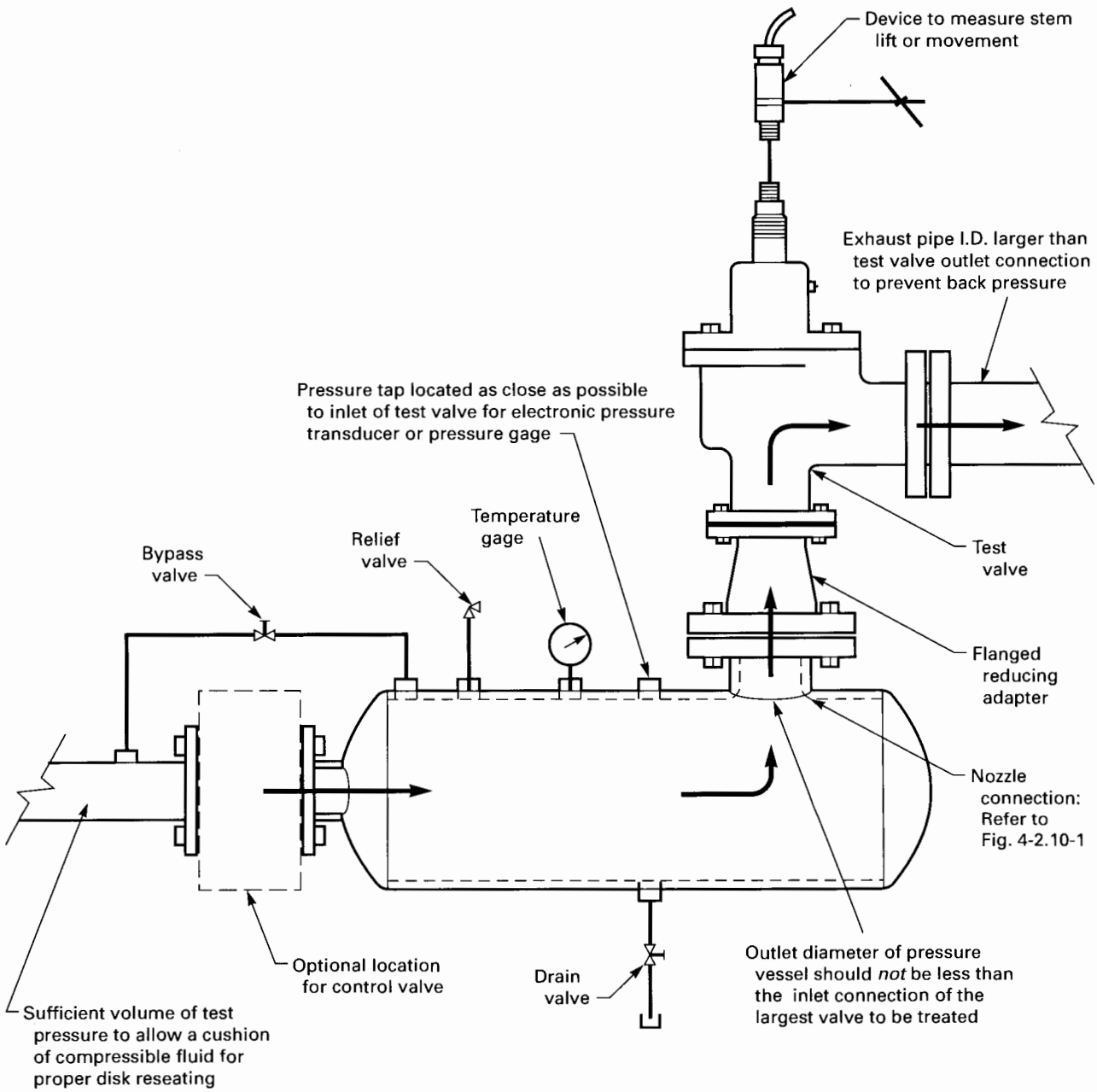

Copyright ASME International
Provided by IHS under license with ASME
No reproduction or networking permitted without license from IHS

Order Number: 02005095
Sold to:LHIP CO LTD [700166107362],
2014-04-15 08:26:03 UTC

Fig. 8-2.2-2 Recommended Arrangement for Testing Valves With Incompressible Fluids

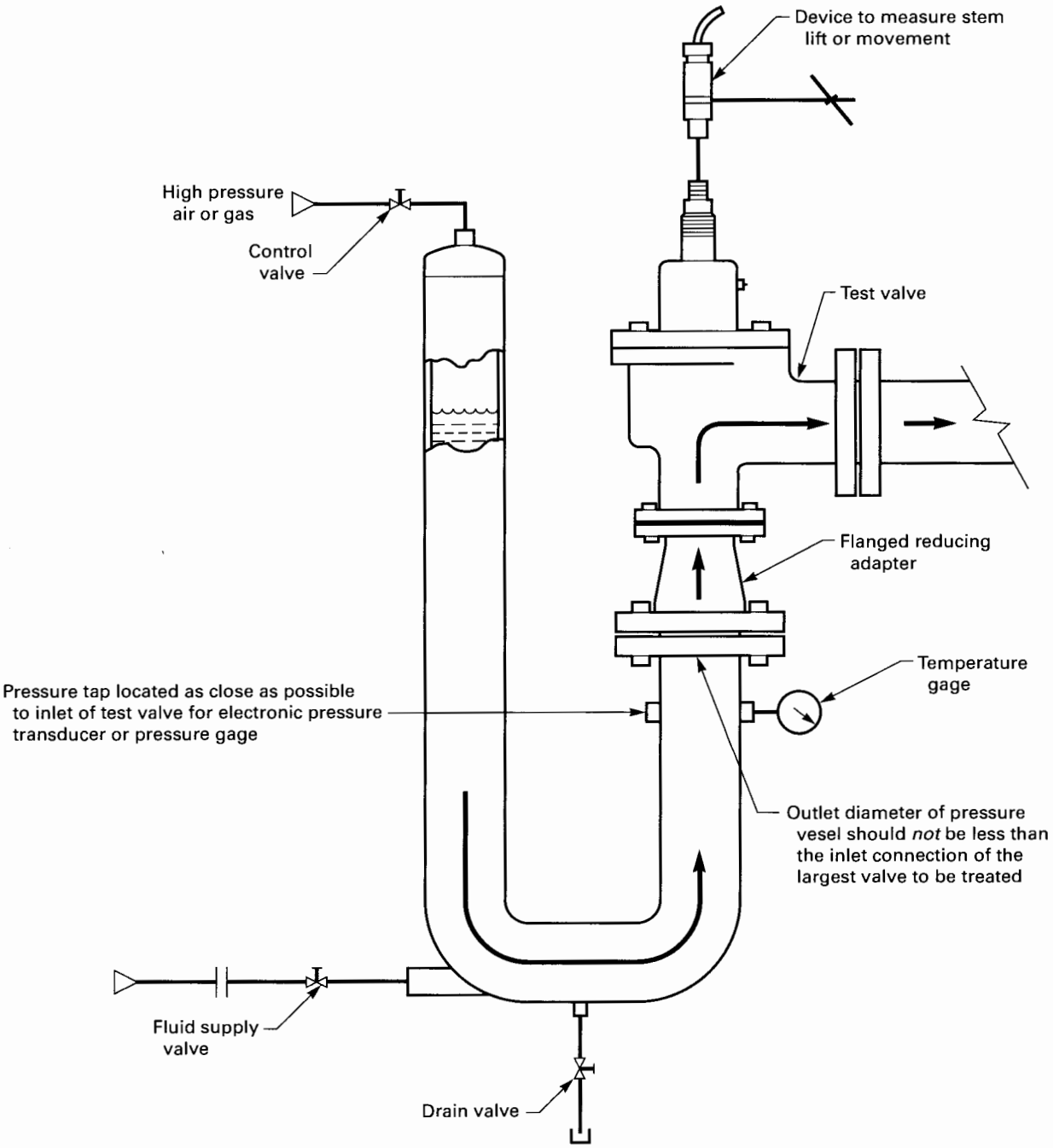

Copyright ASME International
Provided by IHS under license with ASME
No reproduction or networking permitted without license from IHS

Order Number: 02005095
Sold to:LHIP CO LTD [700166107362],
2014-04-15 08:26:03 UTC

between the point at which the pressure is to be measured and the pressure instrument.

8-2.3 Valve-Lift Measurements

(a) The lift of the valve disk, under testing conditions, shall be determined by suitable means to whatever degree of accuracy is imposed by the procedure under which the valve is being tested.

(b) In open- or vented-bonnet designs, when the top of the spindle may be exposed during the tests, an indicator of appropriate range may be attached to the top of the valve to indicate the movement of the spindle. In closed-bonnet valves where the top of the spindle cannot be exposed, arrangements shall be made to permit indicating, reading, or recording spindle movement outside the valve bonnet or cap. In either case, care must be exercised that the arrangement does not impose an additional load on the valve spindle or interfere with the operation of the valve.

Erroneous lift indications are possible under conditions of testing valves with fluids at elevated temperatures. The temperature of the fluid may cause thermal expansion of the valve parts, producing an erroneous initial reading on the lift indicator. When extreme accuracy in results is desired, measures shall be taken to distinguish between this thermal expansion and actual valve lift.

8-3 IN-SERVICE TESTING PROCEDURES

8-3.1 General Features of Tests

(a) These valve tests are designed to ensure service readiness for valve set pressure and operation, not necessarily to demonstrate total valve conformance to this Code or its specifications. The test methods per paras. 8-3.2 or 8-3.3 are acceptable to meet this requirement subject to agreement between the interested parties.

(b) As a safety precaution, all operating personnel shall be properly trained in the appropriate test equipment procedures, test preparations, and emergency plans. Care shall be taken to protect personnel from elevated temperature, noise levels, and escaping fluids during testing. Prior to testing, a visual inspection of the valve is recommended. Observations should include the following as a minimum:

(1) gagging of the valve
(2) valve leakage
(3) inspection of discharge piping
(4) corrosion or residue
(5) installation of appropriate cap and lever
(6) seal integrity (to ensure against unauthorized adjustment)
(7) proper valve installation

CAUTION: Valves should be gagged during inspection when personnel are within close proximity to the valve, provided adequate overpressure protection of the system is maintained. The gag should be removed from the valve following inspection and prior to the test. Gagging of valves should be performed in accordance with the instructions outlined by the valve manufacturer.

(c) A suitable pressure measurement instrument meeting the requirements of para. 8-4.2 shall be installed at a location that allows accurate measurement of system pressure at the valve inlet. Other measurement instruments used with various test devices shall be in conformance with the requirements of the device manufacturer.

8-3.2 Test Methods

(a) Testing With System Pressure. The pressure to the valve inlet is increased until the set pressure is reached. Observe and record the set pressure of the pressure relief device and any other desired or pertinent valve characteristics. Gradually decrease the inlet pressure until the valve closes, and, if required, record the reseat pressure. This test shall be repeated such that the operational characteristics can be computed in accordance with the requirements of subsection 9-3.

Test conditions such as ambient temperature, valve temperature, fluid conditions, back pressures, and installation conditions should approximate the normal operating conditions under which the pressure relief valve would be exposed.

Seat leakage testing should be conducted per the requirements of subsection 8-5.

(b) Testing With Other Pressure Sources. On installations with pilot-operated pressure relief valves where increasing system pressure above normal operating pressure may not be desirable, a field test accessory may be used in accordance with the valve manufacturer's recommendations to determine set pressure. Refer to Fig. 8-3.2-1 for a typical arrangement using a field test accessory.

Tests by this method shall be repeated such that the operational characteristics can be computed in accordance with the requirements of subsection 9-3.

(c) Testing With Auxiliary Lift-Assist Devices. On valve installations where increasing system pressure above normal operating pressure may not be desirable, auxiliary lift devices may be used in accordance with the valve lift-assist device manufacturer's procedure and the manufacturer's recommendations. The lift-assist device, in conjunction with system pressure, provides a supplemental force to overcome the spring force on the valve disk. The calibrated lift-assist device is attached to the stem of the valve, and load is applied while maintaining constant system pressure until the valve opens. The valve opening is characterized by an audible sound, momentary drop in assist load, and/or system fluid release. At the time of the opening, simultaneous readings of system pressure and applied load are recorded. The load is released from the lift-assist device. Lift-assist

Copyright ASME International
Provided by IHS under license with ASME
No reproduction or networking permitted without license from IHS

Order Number: 02005095
Sold to:LHIP CO LTD [700166107362],
2014-04-15 08:26:03 UTC

Fig. 8-3.2-1 Pilot-Operated Pressure Relief Valve Field Test Accessory

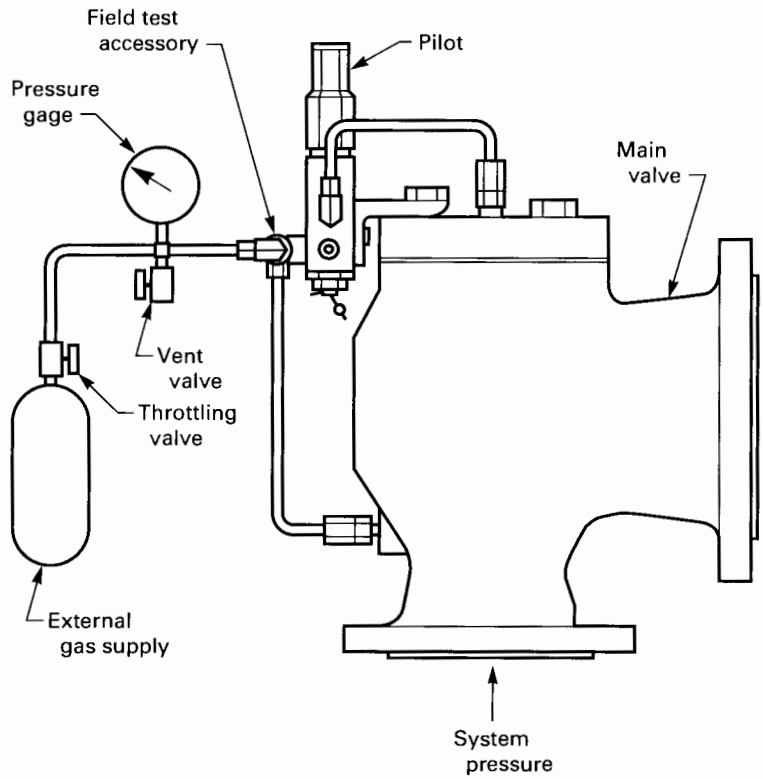

devices may be operated manually, semi-automatically, or automatically. Valve set pressure may be presented graphically or be calculated using measured system pressure, measured lifting force, and the effective area of the valve seat. The effective area of the valve seat can be calculated from characterization tests or tests where the lift-assist test is performed and the results compared with a full pressure test. Before initial use of the lift-assist device, function and valve effective seat area shall be validated by demonstrating that the calculated set pressure determined by the lift-assist test compares with the actual set pressure determined by a full pressure test within an acceptable deviation agreed to by the parties of the test. Validation tests may be required for the specific valve design, size, and fluid conditions of the test. This test shall be repeated such that the operational characteristics can be computed in accordance with the requirements of subsection 9-3. Valve reseat pressure cannot be determined using this test method. Valve control elements shall be set to the valve manufacturer's specification.

CAUTION: Auxiliary lift devices can cause valve damage at inlet pressure too low relative to valve-set pressure. Auxiliary lift devices may not provide reliable results if there is damage to valve internal parts or if the valve has excessive leakage.

8-3.3 In-Service Verification of Pressure-Relieving Capacity

(a) If the parties of the test agree, an approximation of the relief valve flowing capacity can be determined in-service following completion of one of the tests described in para. 8-3.2. In most cases, the purpose of such tests is to verify that the pressure-relieving devices in service are of adequate size to prevent an overpressure condition.

CAUTION: Precautions must be taken during the tests to ensure that the maximum allowable working pressure of the system being protected is not exceeded beyond permissible safe limits. Therefore, the safety procedures noted in para. 8-3.1(b) should be applied during the test.

(b) An accumulation test may be used if a quantitative value of capacity is not desired. Such a test would be conducted by shutting off all the outlets from the vessel and maximizing the energy and mass flow input, which will be relieved by the pressure relief device. If the device is properly sized, the pressure in the vessel should not rise above a predetermined acceptable point. This method should not be used on a steam boiler with a superheater or reheater on a high-temperature water boiler.

Copyright ASME International
Provided by IHS under license with ASME
No reproduction or networking permitted without license from IHS

Order Number: 02005095
Sold to:LHIP CO LTD [700166107362],
2014-04-15 08:26:03 UTC

(c) An estimated quantitative measure of flowing capacity can be determined for pressure relief valves mounted on steam boilers. As in the accumulation test above, all steam discharge outlets are shut while firing the boiler at a controlled rate sufficient to keep the valve open at a specified pressure. While maintaining steady steaming conditions over a long period of time, pressure relief valve capacity may be estimated from a measure of the rate of feed water input to the boiler.

(d) Other test arrangements may be used if agreed to by all interested parties. As an example, the arrangements may include the attachment of a vessel to the valve outlet for collection of the discharged fluid and release to atmosphere through a flowmetering device. Precautions should be taken to ensure that the built-up back pressure that may result does not affect the valve operation.

8-4 BENCH TESTING PROCEDURES

8-4.1 General Features of Tests

There shall be assurance that the pressure relief devices are properly assembled with components that meet the design specification requirements. The pressure relief device shall be clean and ready for test.

The pressure relief device to be tested shall be installed on a test vessel with adapter fittings (flanged, screwed, welded, etc.). See Fig. 4-2.10-1 for acceptable adapter fitting contours for minimum inlet pressure drop. Other adapter fittings may be used provided the accuracy of the test is not affected. Operating and environmental conditions shall be maintained in accordance with the requirements of the procedure used. The duration of the test shall be that required to obtain the necessary performance data under stable conditions.

8-4.2 Compressible Fluids

(a) Valves marked for steam service shall be tested on steam. Valves marked for air, gas, or vapor service shall be tested with air or gas.

(b) Pressure relief valve inlet pressure shall be the static pressure as measured with a pressure tap positioned as shown in Fig. 8-2.2-1.

NOTE: For steam testing, the quality of the steam may affect the operational characteristics of the valve. The steam quality may be affected by inadequate moisture separation, an underheated test vessel, and/or improper steam trap operation.

(c) Increase the pressure at the valve inlet to 90% of the expected set pressure. Then increase at a rate equal to 2% of set pressure per second or at a rate that permits accurate pressure readings. Observe and record the set pressure and other pertinent valve characteristics. Decrease the inlet pressure until the valve closes.

This test shall be repeated such that operational characteristics can be computed in accordance with subsection 9-3.

(d) To obtain an accurate reseat pressure measurement, an adequate volume of test medium is required at the valve inlet. When determining this volume, consideration must be given to the cycle time and size of the device being tested relative to the rate of supply of the test medium.

8-4.3 Incompressible Fluids

(a) Valves marked for liquid service shall be tested with water or another suitable liquid.

(b) Pressure relief valve inlet pressure shall be the static pressure as measured with a pressure tap positioned, as shown in Fig. 8-2.2-2.

(c) Same as above [para. 8-4.2(c)].

8-5 SEAT TIGHTNESS TEST

Seat tightness can be determined, when required, by using API Standard 527 or another method agreed to by the parties of the test. These methods may include wet paper towel, soap bubble, cold bar, mirror, or fluid collection tests.

Copyright ASME International
Provided by IHS under license with ASME
No reproduction or networking permitted without license from IHS

Order Number: 02005095
Sold to:LHIP CO LTD [700166107362],
2014-04-15 08:26:03 UTC

Section 9
Computation of Results

9-1 CORRECTION OF MEASURED VARIABLES

The values of measured variables shall be corrected in accordance with instrument calibrations. No other corrections to the data are permitted.

9-2 REVIEW OF INSTRUMENT READINGS

Before calculations are undertaken, the instrument readings, as recorded in the log, shall be reviewed for inconsistency and large fluctuation in accordance with ASME PTC 19.1.

9-3 COMPUTATION OF OPERATIONAL CHARACTERISTICS

When specified in Section 8 to determine specific operational characteristics, the result will be computed as follows.

9-3.1 Set Pressure

The computed set pressure will be the average of at least the last three measured set pressures once established and stabilized. A set pressure is considered stable when the measured set pressures show no consistent upward or downward trend and all are within 1% or one-half psi, whichever is greater, of the computed set pressure.

9-3.2 Blowdown

The computed blowdown shall be the average of the individual blowdowns of those tests used to determine the computed set pressure in para. 9-3.1.

9-3.3 Lift

The computed lift shall be the average of the individual lift measurements of those tests used to determine the computed set pressure.

Copyright ASME International
Provided by IHS under license with ASME
No reproduction or networking permitted without license from IHS

Order Number: 02005095
Sold to:LHIP CO LTD [700166107362],
2014-04-15 08:26:03 UTC

Section 10
Test Summary Report Form

10-1 GENERAL INSTRUCTIONS

(a) The Report of Test shall be prepared for the purpose of formally recording observed data and computed results. It shall contain sufficient supporting information to prove that all objectives of any tests conducted in accordance with this Code have been attained.

(b) The procedures described in Section 9 are recommended for use in computing the test results.

(c) The Report of Test shall include Parts I to IV as listed below and may include any of the remaining parts as agreed to by the contracting parties.

I General Information
II Summary of Results
III Description of Valve Under Test
IV Observed Data and Computed Results
V Contract and Agreed Test Conditions Corrections
VI Test Methods and Procedures
VII Supporting Data

The following outline gives a discussion of each part of the Test Report.

10-2 PART I: GENERAL INFORMATION

This Part shall include the following items:

(a) data of test
(b) location of test facilities
(c) valve manufacturer's name
(d) valve type or model number
(e) valve identification
(f) marked set pressure
(g) inlet and outlet connection sizes
(h) person conducting test
(i) operational characteristics to be measured
(j) test fluid

10-3 PART II: SUMMARY OF RESULTS

This Part shall include those computed values with units of measurement and characteristics listed in subsection 10-2 that describe the performance of the valve at test conditions.

10-4 PART III: DESCRIPTION OF VALVE UNDER TEST

This Part may include assembly drawings, manufacturing drawings, and measured dimensions. Manufacturing drawings for these parts may be submitted with the assembly drawing. The dimensions of these parts shall include the following, if applicable:

(a) bore diameter, in.
(b) seat diameter, in.
(c) seat angle, deg
(d) inlet opening diameter, in.
(e) ratio of throat diameter to the diameter of the inlet opening
(f) actual discharge area, $in.^2$

10-5 PART IV: OBSERVED DATA AND COMPUTED RESULTS

This Part shall include a record of data and calculations required for the results of the tests. The data shall have been corrected for instrument calibrations and conditions prevailing for each test run.

10-6 PART V: CONTRACT AND AGREED TEST CONDITIONS CORRECTIONS

Operating conditions, such as the following, that have been agreed upon prior to the test shall be reported for each test:

(a) valve-maximum-inlet pressure
(b) valve-inlet temperature
(c) valve temperature profile

10-7 PART VI: TEST METHODS AND PROCEDURES

This Part shall include a description of the instruments and apparatus used to measure the various quantities and procedures for observing the mechanical characteristics of the valve under test.

10-8 PART VII: SUPPORTING DATA

This Part shall include pertinent material supplementing data presented elsewhere in the report, whereby an independent verification of the report results can be made. This material may include, but not necessarily be limited to the following:

(a) instrument calibration records
(b) detailed log sheets
(c) sample calculations
(d) graphical presentation of data

Copyright ASME International
Provided by IHS under license with ASME
No reproduction or networking permitted without license from IHS

Order Number: 02005095
Sold to:LHIP CO LTD [700166107362],
2014-04-15 08:26:03 UTC

INTENTIONALLY LEFT BLANK

Copyright ASME International
Provided by IHS under license with ASME
No reproduction or networking permitted without license from IHS

Order Number: 02005095
Sold to:LHIP CO LTD [700166107362],
2014-04-15 08:26:03 UTC

MANDATORY APPENDIX I
SI (METRIC) UNITS AND CONVERSION FACTORS

Table I-1 SI (Metric) Units

Quantity	Unit	Symbol	Other Units or Limitations
Space and Time			
Plane angle	radian	rad	degree (decimalized)
Length	meter	m	...
Area	square meter	m^2	...
Volume	cubic meter	m^3	liter (L) for fluids only (use without prefix)
Time	second	s	minute (min), hour (h), day (d), week, and year (y)
Periodic and Related Phenomena			
Frequency	hertz	Hz	hertz = cycle per second
Rotational speed	radian per second	rad/s	revolutions per minute (rpm)
Fluence	nvt	...	...
Neutron energy	MeV	E_n	...
Sound (pressure level)	decibel	db	...
Mechanics			
Mass	kilogram	kg	...
Density	...	kg/m^3	...
Moment of inertia	...	$kg \cdot m^2$	...
Force	newton	N	...
Moment or force (torque)	newton-meter	N•m	...
Pressure and stress	pascal	Pa	pascal = newton per square meter
Energy, work	joule	J	kilowatt-hour (kW•h)
Power	watt	W	...
Impact strength	joule	J	...
Section modulus	cubic meter	m^3	...
Moment of section (second moment of area)	...	m^4	...
Fracture tougheners	$Pa \cdot \sqrt{m}$	K_{1C}	...
Heat			
Temperature (thermodynamic) [Note (1)]	kelvin	K	degree Celsius (°C)
Temperature (other than thermodynamic)	degree Celsius	°C	kelvin (K)
Linear expansion coefficient	...	K^{-1}	$°C^{-1}$
Quantity of heat	joule	J	...
Heat flow rate	watt	W	...
Thermal conductivity	...	W/(m•K)	W/(m•°C)
Thermal diffusivity	...	m^2/s	...
Specific heat capacity	...	J/(kg•K)	J/(kg•°C)
Electricity and Magnetism			
Electric current	ampere	A	...
Electric potential	volt	V	...
Current density	...	A/m^2	...
Electrical energy	watt	W	...
Magnetization current	ampere/meter	A/m	...
Light			
Illumination	lux	lx	...
Wavelength	angstrom	Å	...

NOTE:

(1) Preferred use for temperature and temperature interval is degree Celsius (°C), except for thermodynamic and cryogenic work where kelvins may be more suitable. For temperature interval, 1K = 1°C exactly.

Copyright ASME International
Provided by IHS under license with ASME
No reproduction or networking permitted without license from IHS

Order Number: 02005095
Sold to:LHIP CO LTD [700166107362],
2014-04-15 08:26:03 UTC

Table I-2 Commonly Used Conversion Factors

Quantity	Conversion From	Conversion To	Multiplication Factor [Notes (1), (2)]	
Plane angle	degree	rad	1.745 329	E −02
Length	in.	m	2.54*	E −02
	ft	m	3.048*	E −01
	yd	m	9.144*	E −01
Area	$in.^2$	m^2	6.451 6*	E −04
	ft^2	m^2	9.290 34*	E −02
	yd^2	m^2	8.361 274	E −01
Volume	$in.^3$	m^3	1.638 706	E −05
	ft^3	m^3	2.831 685	E −02
	U.S. gallon	m^3	3.785 412	E −05
	Imperial gallon	m^3	4.546 090	E −03
	liter	m^3	1.0*	E −03
Mass	lb (avoir.)	kg	4.535 924	E −01
	ton (metric)	kg	1.000 00*	E +03
	ton (short 2,000 lbm)	kg	9.071 847	E +02
Force	kgf	N	9.806 65*	E +00
	lbf	N	4.448 222	E +00
Bending, torque	kgf-m	N•m	9.806 65*	E +00
	lbf-in.	N•m	1.129 848	E −01
	lbf-ft	N•m	1.355 818	E +00
Pressure, stress	kgf/m^2	Pa	9.806 65*	E +00
	lbf/ft^2	Pa	4.788 026	E −01
	$lbf/in.^2$ (psi)	Pa	6.894 757	E +03
	$kips/in.^2$	Pa	6.894 757	E +06
	bar	Pa	1.0*	E −05
	inch of water (60°F)	Pa	2.4884	E +02
Energy, work	Btu (IT) [Note (3)]	J	1.055 056	E +03
	ft-lbf	J	1.355 818	E +00
Power	hp (550 ft-lbf/sec)	W	7.456 999	E +02
Temperature	°C	K	$t_K = t_C + 273.15$	
	°F	K	$t_K = (t_F + 459.67)/1.8$	
	°F	°C	$t_C = (t_F - 32)/1.8$	
Temperature interval	°C	K	1.0*	E +00
	°F	K or °C	5.555 556	E −01
Viscosity, dynamic	$lbf\text{-}sec/ft^2$	Pa•s	4.788 026	E +01
	lbm/ft-sec	Pa•s	1.488 164	E +00

GENERAL NOTES:

(a) A more extensive list of conversion factors between SI (Metric) units and U.S. Customary are given in ASME SI-1, ASME Orientation and Guide for Use of SI (Metric) Units, and ASTM E 380, Metric Practice Guide.

(b) The factors are written as a number greater than 1 and less than 10 with six decimal places. The number is followed by the letter "E" (for exponent), a plus or minus symbol, and two digits that indicate the power of 10 by which the number must be multiplied to obtain the correct value.

For example

$$3.523\,907\ \text{E}-02 \text{ is } 3.523\,907 \times 10^{-2} \text{ or } 0.035\,239\,07$$

NOTES:

(1) Relationships that are exact in terms of the base units are followed by a single asterisk.

(2) Precaution should be taken when making conversions for metric units that constants are adjusted to their metric values.

(3) International table.

Copyright ASME International
Provided by IHS under license with ASME
No reproduction or networking permitted without license from IHS

Order Number: 02005095
Sold to:LHIP CO LTD [700166107362],
2014-04-15 08:26:03 UTC

MANDATORY APPENDIX II
EXAMPLES OF DETERMINING FLOW RATE UNCERTAINTIES

II-1 PURPOSE

The purpose of this Mandatory Appendix is to present an example of the various methods used to establish meaningful estimates for the limits of uncertainty of the final flow measurement specified in Section 1, subsection 1-3. The terms and methods described in ASME PTC 19.1-1985 were used in this example to establish the estimate of measurement uncertainty. The techniques and procedures specified in ASME PTC 25 and PTC 19.5-1971, Fluid Meters, Part 2 were used in this example for determination of valve flow rates. This Appendix is not intended to be definitive, and the latest editions of PTC 19.1 and PTC 19.5 should be consulted for possible updates to equations and terminology.

II-2 EXAMPLE DETERMINATION

Meter Type:	ASME concentric thin-plate square-edged orifice with flange taps
Purpose:	Establish estimate for limits of uncertainty for flow test results
Medium:	Water
Assumption:	The coefficient for the meter has not been calibrated against a standard.

The following is a typical set of test data:

Diameter of meter:	$D = 3.117$ in.
Diameter of orifice plate:	$d_o = 0.935$ in.
Pressure drop across meter:	$\Delta P = 387.8$ in. water
Temperature:	$T = 77°F$
Beta ratio:	$B = d_o/D = 0.300$

Define the functional relationship

$$m = \frac{358.93\, C\, d_o^2\, F_a \sqrt{\rho\,(\Delta P)}}{\sqrt{1 - \left(\frac{d_o}{D}\right)^4}} \qquad (1)$$

where

C = discharge coefficient, dimensionless
D = diameter of meter, in.
d_o = diameter of orifice plate, in.
F_a = thermal expansion number, dimensionless
m = mass flow rate, lbm/hr
ΔP = differential pressure head across meter, in. water
ρ = water density, lbm/ft^3

List elemental error sources, and list estimated bias and precision errors for each (see Table II-1).

II-2.1 Parameter C — Discharge Coefficient

Per the "Fundamentals of Temperature, Pressure, and Flow Measurement," the discharge coefficient for orifice plate meters is characterized by a bias error of ±0.55% for 2 in. and greater pipes with Reynolds numbers exceeding 5,000 × D, where D is in units of inches.

Also, the "Flowmeter Computation Handbook" recommends that a 0.5% margin be added to all other identified bias errors to account for installation variations.

The total relative bias error for C is determined as follows:

$$B_{C\%} = 0.5\% + 0.55\% = 1.05\%$$

The coefficient of discharge is calculated based on the equations listed in ASME PTC 19.5.

The calculated value for C is 0.599.

The absolute value for the bias limit is

$$B_C = (0.0105)\,(0.599) = 0.00627 \approx 0.007$$

The absolute precision error for the coefficient of discharge is zero.

II-2.2 Parameter d_o — Diameter of Orifice Plate

The estimated bias error for the orifice plate diameter is ±0.001 in. This absolute bias error estimate accounts for the inaccuracies in the measurement device and the potential personnel error in reading the measurement device.

The absolute precision error for the orifice plate diameter is zero.

II-2.3 Parameter D — Diameter of Meter

The estimated bias error for the meter diameter is ±0.003 in. This estimate in absolute bias error accounts for both measurement device and personnel inaccuracies.

The absolute precision error for the meter diameter is zero.

II-2.4 Parameter F_a — Thermal Expansion Number

$$F_a = \int (T)$$

where

T = water temperature, °F

Copyright ASME International
Provided by IHS under license with ASME
No reproduction or networking permitted without license from IHS

Order Number: 02005095
Sold to:LHIP CO LTD [700166107362],
2014-04-15 08:26:03 UTC

Table II-1
Table of Uncertainty Parameters

Parameter	Absolute Bias Error, B	Absolute Precision Error, S	Nominal Value (Based on Test Data)	Relative Bias Error, B_R	Relative Precision Error, S_R	Relative Sensitivity Coefficient, θ^1
C	± 0.007	0	0.599	$\frac{0.007}{0.599} = \pm 0.0117$	0	1
d_o	±0.001 in.	0	0.935 in.	$\frac{0.001}{0.935} = \pm 0.00107$	0	$\frac{2}{1-\beta^4} = 2.0163$
D	±0.003 in	0	3.117 in.	$\frac{0.003}{3.117} = \pm 0.0096$	0	$\frac{2\beta^4}{1-\beta^4} = 0.0163$
F_a	0	0	1.00007	0	0	1
ρ	±0.04 lbm/ft^3	±0.02 lbm/ft^3	62.25 lbm/ft^3	$\frac{0.04}{62.25} = \pm 0.0064$	$\frac{0.02}{62.25} = \pm 0.00032$	0.5
ΔP	11 in. water	5 in. water	387.8 in. water	$\frac{11}{387.8} = \pm 0.02836$	$\frac{5}{387.8} = \pm 0.01290$	0.5

F_a is determined from Fig. 11-1-3 on page 156 of ASME PTC 19.5. The curve in Fig. 11-1-3 of ASME PTC 19.5 can be approximated by the following equation:

$$F_a = 1.7143 \times 10^{-5}T + 0.99875$$

$$BF_a = \frac{\partial F_a}{\partial T} B_T$$

$$\frac{\partial F_a}{\partial T} = \frac{dF_a}{dT} = 1.7143 \times 10^{-5}$$

where

$B_{Fa} = (1.7143 \times 10^{-5})(5) = \pm 0.00009$
B_T = assumed to be ±5°F

F_a based on a nominal temperature of 77°F is

$F_a = (1.7143 \times 10^{-5})(77) + 0.99875$
$= 1.00007$ at 77°F

The relative variation in F_a for a 5°F error in water temperature would equate to

$$\%\ \text{error}\ F_a = \frac{0.00009}{1.00007} = 0.01\%$$

Therefore, the absolute bias error is considered zero.

The absolute precision error for the thermal expansion number, F_a, is zero.

II-2.5 Parameter ρ — Density of Water

$$\rho = \int (TP)$$

where

P = pressure, psia
T = water temperature, °F

ρ is determined from Table 3 of the ASME Steam Tables, 1967.

The variation in ρ due to pressure is negligible and not considered.

The variation in ρ due to a ±5% error in water temperature would equate to

$$B_\rho = \pm 0.03875$$

The absolute bias error for ρ is taken as ±0.04 lb/ft^3.

The absolute precision error, $S\rho$, for water density is estimated from past experience to be ±0.02 lbm/ft^3.

II-2.6 Parameter ΔP — Differential Pressure Head Across Meter, in. Water

ΔP is measured on a strip chart recorder that is calibrated using a transfer gage with a range of 0–1000 in. water. The transfer gage is in turn calibrated using a deadweight tester.

The bias error limit for the strip chart recorder is based on one-half the smallest subdivision, which is ±10 in. water.

The accepted tolerance for the transfer gage is ±0.25% of full scale, which equates to an absolute bias error of ±2.5 in. water.

The calibrator (deadweight tester) for the transfer gage is two times as accurate as the transfer gage, and the bias error induced is ±0.3 in. water. Refer to pgs. 54–55 of "Fundamentals of Measurement Error."

The RSS technique for combining the bias errors in water yields

$$B_{\Delta P} = [(10)^2 + (2.5)^2 + (0.3)^2]^{1/2} = 10.3 \approx 11.0$$

The absolute precision error $S_{\Delta P}$ for the meter differential pressure is estimated based on previous experience to be ±5 in. water.

All the absolute and relative bias and precision errors are tabulated in the following equations. Also tabulated

Copyright ASME International
Provided by IHS under license with ASME
No reproduction or networking permitted without license from IHS

Order Number: 02005095
Sold to:LHIP CO LTD [700166107362],
2014-04-15 08:26:03 UTC

for each parameter are the relative sensitivity coefficients, θ', which were determined in accordance with ASME PTC 19.1-1985.

The individual parameter errors are propagated separately for bias and precision into the result according to a Taylor series expansion.

The relative bias error for the flow rate is

$$\frac{B_m}{m} = \left[\left(1 \times \frac{B_c}{C}\right)^2 + \left(\frac{2}{1-\beta^4} \times \frac{B_{d_o}}{d_o}\right)^2 + \left(\frac{2\beta^4}{1-\beta^4} \times \frac{B_D}{D}\right)^2 + \left(1 \times \frac{B_{F_a}}{F_a}\right)^2 + \left(0.5 \times \frac{B_\rho}{\rho}\right)^2 + \left(0.5 \times \frac{B_{\Delta P}}{\Delta P}\right)^2\right]^{1/2} \quad (2)$$

The relative precision error for the flow rate is

$$\frac{S_m}{m} = \left[\left(1 \times \frac{S_c}{C}\right)^2 + \left(\frac{2}{1-\beta^4} \times \frac{S_{d_o}}{d_o}\right)^2 + \left(\frac{2\beta^4}{1-\beta^4} \times \frac{S_D}{D}\right)^2 + \left(1 \times \frac{S_{F_a}}{F_a}\right)^2 + \left(0.5 \times \frac{S_\rho}{\rho}\right)^2 + \left(0.5 \times \frac{S_{\Delta P}}{\Delta P}\right)^2\right]^{1/2} \quad (3)$$

Substituting the appropriate values into eqs. (2) and (3)

$$\begin{aligned}\frac{B_m}{m} &= [(0.0117)^2 + (2.016 \times 0.00107)^2 + (0.0163 \times 0.00096)^2 + (0) + (0.5 \times 0.0064)^2 + (0.5 \times 0.02836)^2]^{1/2} \\ &= (0.0001370 + 0.0000046 + 2.45 \times 10^{-10} + 0 + 0.0000102 + 0.0002011)^{1/2} \\ &\quad \pm 0.0188 \end{aligned} \quad (4)$$

$$\begin{aligned}\frac{S_m}{m} &= \pm[(0) + (0) + (0) + (0) + (0.5 \times 0.00032)^2 + (0.5 \times 0.01290)^2]^{1/2} \\ &= \pm(2.5 \times 10^{-8} + 0.0000416)^{1/2} \\ &= \pm 0.0065 \end{aligned} \quad (5)$$

Examination of the individual factors for each parameter in eqs. (4) and (5) clearly indicates which parameters contribute most to the bias and precision error limits of the result. In this example, the largest contributors to the bias error limit are the differential pressure, ΔP, and the discharge coefficient, C. The largest contributor to the precision error limit is the differential pressure measurement, ΔP.

Since all the estimates for precision errors of the independent parameters are based on experience, the degrees of freedom can be assumed to be greater than 30, so that the t value can be taken as 2. Therefore, the relative precision error limit is (2) (0.0065) = ±0.013.

The total uncertainty in the flow rate can be obtained by combining the bias and precision errors as follows:

$$\begin{aligned}\frac{U_{RSS}}{m} &= \left[\left(\frac{B_m}{m}\right)^2 + \left(2 \times \frac{S_m}{m}\right)^2\right]^{1/2} \\ &= [(0.0188) + (2 \times 0.0065)^2]^{1/2} \\ &= \pm 2.28\% \\ &\quad \text{at } \sim 95\% \text{ coverage} \end{aligned} \quad (6)$$

Note that the requirement of ASME PTC 25–2008 for m ± 2% has not been achieved.

The largest contributor to uncertainty is the differential pressure, ΔP. The first step is to eliminate the transfer gage for calibration of the strip chart recorder. The strip chart recorder will be calibrated directly using a dead weight tester.

The bias error limit for the deadweight tester is ±0.1% of full scale. The full scale range for the deadweight tester is 0 in. to 500 in. of water. The absolute bias error limit is 0.001 × 500 = 0.5 in. water.

In addition, the calibration range for ΔP is changed to reduce the smallest subdivision on the strip chart recorder from 20 in. of water to 10 in. of water. The bias error limit is based on one-half the smallest subdivision, which results in a reduction of the bias error limit from 10 in. to 5 in. of water.

The RSS technique for combining bias errors is used to recalculate the absolute bias error for ΔP.

$$B_{\Delta P} = [(5)^2 + (0.5)^2]^{1/2} = 5.02 \text{ in. water}$$

Round up to 6 in. of water.

The revised relative bias error is

$$(B_{\Delta P})_R = \frac{6}{387.8} = 0.01547$$

The revised value for $\frac{B_m}{m}$ is

$$\frac{B_m}{m} = 0.0145$$

Combining bias and precision errors yields

$$\frac{U_{RSS}}{m} = 1.959 \text{ at } \sim 95\% \text{ coverage}$$

The mass flow rate, m, based on the nominal values noted herein is 29,300 lbm/hr.

The following test was conducted to verify the estimate for the precision error index.

All instruments were calibrated in accordance with the tolerance limits stated herein.

Copyright ASME International
Provided by IHS under license with ASME
No reproduction or networking permitted without license from IHS

Order Number: 02005095
Sold to:LHIP CO LTD [700166107362],
2014-04-15 08:26:03 UTC

A steady-state flow test was conducted with the 0.935 in. diameter orifice plate. The temperature was a constant 77°F for the entire test. During the test, ten separate sets of data were taken to establish the precision error limit of uncertainty. The results of the test are as follows:

Data Set	m
1	29,410
2	29,280
3	29,170
4	29,320
5	29,190
6	29,450
7	29,305
8	29,260
9	29,380
10	29,350

$\bar{x}$, average value m for sample is

$$\bar{x} = \frac{1}{N}\sum_{k=1}^{N} X_k = \frac{1}{10}(293{,}115) = 29{,}311 \text{ lbm/hr}$$

The sample standard deviation is

$$S = \left[\frac{\sum_{k=1}^{N}(X_k - \bar{x})^2}{N-1}\right]^{1/2} = 90.4 \text{ lbm/hr}$$

Degrees of freedom $N - 1 = 10 - 1 = 9$.

The t value for the 95 percentile point for a two-tailed Student t distribution with 9 degrees of freedom is 2.262.

Relative precision error limit is calculated as follows:

$$\pm\frac{90.4}{29{,}311}(2.262) = \pm 0.0069$$

This value is roughly half the original estimated. Combining the new precision error limit obtained by test with the bias error estimate yields

$$\frac{U_{RSS}}{m} = \pm[(0.0145)^2 + (0.0069)^2]^{1/2} = \pm 0.016$$
$$= \pm 1.6\% \text{ at } \sim 95\% \text{ coverage}$$

Note that the test objective of ±2% has been achieved; however, the uncertainty error limits can be further reduced by conducting calibration tests to better define the meter coefficient of discharge. Refer to pg. 39 of ASME PTC 19.1 for additional information.

The report summary is as follows:

$\frac{B_m}{m}$ = −0.0145, bias error

$\frac{S_m}{m}$ = ±0.0069, uncertainty of mass flow rate

$\frac{U_{RSS}}{m}$ = 1.6% at ~95% coverage, precision (process) error

II-3 REFERENCES

ASME Flowmeter Computation Handbook, Report of ASME Research Committee on Fluid Meters

ASME PTC 19.1-1985, Instruments and Apparatus, Part 1, Measurement Uncertainty

ASME PTC 19.5-1971, Fluid Meters, Part 1

Publisher: The American Society of Mechanical Engineers (ASME), Three Park Avenue, New York, NY, 10016-5990; Order Department: 22 Law Drive, P.O. Box 2300, Fairfield, NJ 07007-2300

Benedict, R. P. "Fundamentals of Temperature, Pressure, and Flow Measurement," 2nd ed. Ch. 10, 24. New York: John Wiley & Sons, 1977.

Taylor, James L. "Fundamentals of Measurement Error," 1st ed. Monrovia, CA: NEFF Instrument Corporation, 1988.

Copyright ASME International
Provided by IHS under license with ASME
No reproduction or networking permitted without license from IHS

Order Number: 02005095
Sold to:LHIP CO LTD [700166107362],
2014-04-15 08:26:03 UTC

NONMANDATORY APPENDIX A
REFERENCES

ASME Fluid Meters, Sixth Edition, 1971
ASME PTC 1, General Instructions
ASME PTC 2, Code on Definitions and Values
ASME PTC 19.1, Measurement Uncertainty
ASME PTC 19.2, Pressure Measurement
ASME PTC 19.3, Temperature Measurement
ASME PTC 19.5, Measurement of Quantity of Materials
ASME PTC 19.11, Quality and Purity of Steam
ASME SI-1, Orientation and Guide for Use of SI (Metric) Units
ASME Steam Tables, Sixth Edition
Publisher: The American Society of Mechanical Engineers (ASME), Three Park Avenue, New York, NY 10016-5990; Order Department: 22 Law Drive, P.O. Box 2300, Fairfield, NJ 07007-2300

ASTM D 1070, Standard Test Methods for Relative Density of Gaseous Fuels

ASTM D 1298, Standard Test Method for Density, Relative Density (Specific Gravity), or API Gravity of Crude Petroleum and Liquid Petroleum Products by Hydrometer Method
Publisher: American Society for Testing and Materials (ASTM International), 100 Barr Harbor Drive, P.O. Box C700, West Conshohocken, PA 19428-2959

Colebrook. "Perry's Chemical Engineer's Handbook," 6th ed. New York: McGraw-Hill Book Co., 1984.

Green, P. W. (ed.) "Perry's Chemical Engineer's Handbook," 6th ed. New York: McGraw-Hill Book Co., 1984.

Lapple, C. E. "Isothermal and Adiabatic Flow of Compressible Fluids," Trans. AIChE, 39, pp. 385–432, 1943.

Levenspiel, O. "The Discharge of Gases from a Reservoir Through a Pipe," AIChE Journal 23(3), pp. 402–403, May 1977.

Copyright ASME International
Provided by IHS under license with ASME
No reproduction or networking permitted without license from IHS

Order Number: 02005095
Sold to:LHIP CO LTD [700166107362],
2014-04-15 08:26:03 UTC

INTENTIONALLY LEFT BLANK

:opyright ASME International
rovided by IHS under license with ASME
o reproduction or networking permitted without license from IHS

Order Number: 02005095
Sold to:LHIP CO LTD [700166107362],
2014-04-15 08:26:03 UTC

PERFORMANCE TEST CODES (PTC)

General Instructions ..... PTC 1-2004
Definitions and Values ..... PTC 2-2001
Fired Steam Generators ..... PTC 4-1998
Coal Pulverizers ..... PTC 4.2-1969 (R2003)
Air Heaters ..... PTC 4.3-1974 (R1991)
Gas Turbine Heat Recovery Steam Generators ..... PTC 4.4-1981 (R2003)
Steam Turbines ..... PTC 6-2004
Steam Turbines in Combined Cycles ..... PTC 6.2-2004
Appendix A to PTC 6, The Test Code for Steam Turbines ..... PTC 6A-2000
PTC 6 on Steam Turbines — Interpretations 1977–1983 ..... PTC 6
Guidance for Evaluation of Measurement Uncertainty in Performance Tests of Steam Turbines ..... PTC 6 Report-1985 (R2003)
Procedures for Routine Performance Tests of Steam Turbines ..... PTC 6S-1988 (R2003)
Centrifugal Pumps ..... PTC 8.2-1990
Performance Test Code on Compressors and Exhausters ..... PTC 10-1997 (R2003)
Fans ..... PTC 11-1984 (R2003)
Closed Feedwater Heaters ..... PTC 12.1-2000 (R2005)
Performance Test Code on Steam Surface Condensers ..... PTC 12.2-1998 (R2007)
Performance Test Code on Deaerators ..... PTC 12.3-1997 (R2004)
Moisture Separator Reheaters ..... PTC 12.4-1992 (R2004)
Single Phase Heat Exchangers ..... PTC 12.5-2000 (R2005)
Reciprocating Internal-Combustion Engines ..... PTC 17-1973 (R2003)
Hydraulic Turbines and Pump-Turbines ..... PTC 18-2002
Test Uncertainty ..... PTC 19.1-2005
Pressure Measurement ..... PTC 19.2-1987 (R2004)
Temperature Measurement ..... PTC 19.3-1974 (R2004)
Flow Measurement ..... PTC 19.5-2004
Measurement of Shaft Power ..... PTC 19.7-1980 (R1988)
Flue and Exhaust Gas Analyses ..... PTC 19.10-1981
Steam and Water Sampling, Conditioning, and Analysis in the Power Cycle ..... PTC 19.11-2008
Data Acquisition Systems ..... PTC 19.22-2007
Guidance Manual for Model Testing ..... PTC 19.23-1980 (R1985)
Particulate Matter Collection Equipment ..... PTC 21-1991
Gas Turbines ..... PTC 22-2005
Atmospheric Water Cooling Equipment ..... PTC 23-2003
Ejectors ..... PTC 24-1976 (R1982)
Pressure Relief Devices ..... PTC 25-2008
Speed-Governing Systems for Hydraulic Turbine-Generator Units ..... PTC 29-2005
Air Cooled Heat Exchangers ..... PTC 30-1991 (R2005)
Air-Cooled Steam Condensers ..... PTC 30.1-2007
Ion Exchange Equipment ..... PTC 31-1973 (R1991)
Waste Combustors With Energy Recovery ..... PTC 34-2007
Measurement of Industrial Sound ..... PTC 36-2004
Determining the Concentration of Particulate Matter in a Gas Stream ..... PTC 38-1980 (R1985)
Steam Traps ..... PTC 39-2005
Flue Gas Desulfurization Units ..... PTC 40-1991
Wind Turbines ..... PTC 42-1988 (R2004)
Performance Test Code on Overall Plant Performance ..... PTC 46-1996
Integrated Gasification Combined Cycle Power Generation Plants ..... PTC 47-2006
Fuel Cell Power Systems Performance ..... PTC 50-2002
Performance Monitoring Guidelines for Steam Power Plants ..... PTC PM-1993

The ASME Publications Catalog shows a complete list of all the Standards published by the Society. For a complimentary catalog, or the latest information about our publications, call 1-800-THE-ASME (1-800-843-2763).

Copyright ASME International
Provided by IHS under license with ASME
No reproduction or networking permitted without license from IHS

Order Number: 02005095
Sold to:LHIP CO LTD [700166107362],
2014-04-15 08:26:03 UTC

ASME Services

ASME is committed to developing and delivering technical information. At ASME's Information Central, we make every effort to answer your questions and expedite your orders. Our representatives are ready to assist you in the following areas:

ASME Press
Codes & Standards
Credit Card Orders
IMechE Publications
Meetings & Conferences
Member Dues Status
Member Services & Benefits
Other ASME Programs
Payment Inquiries
Professional Development
Short Courses
Publications
Public Information
Self-Study Courses
Shipping Information
Subscriptions/Journals/Magazines
Symposia Volumes
Technical Papers

How can you reach us? It's easier than ever!

There are four options for making inquiries* or placing orders. Simply mail, phone, fax, or E-mail us and an Information Central representative will handle your request.

Mail
ASME
22 Law Drive, Box 2900
Fairfield, New Jersey
07007-2900

Call Toll Free
US & Canada: 800-THE-ASME
(800-843-2763)
Mexico: 95-800-THE-ASME
(95-800-843-2763)
Universal: 973-882-1167

Fax—24 hours
973-882-1717
973-882-5155

E-Mail—24 hours
Infocentral@asme.org

* Information Central staff are not permitted to answer inquiries about the technical content of this code or standard. Information as to whether or not technical inquiries are issued to this code or standard is shown on the copyright page. All technical inquiries must be submitted in writing to the staff secretary. Additional procedures for inquiries may be listed within.

Copyright ASME International
Provided by IHS under license with ASME
No reproduction or networking permitted without license from IHS

Order Number: 02005095
Sold to:LHIP CO LTD [700166107362],
2014-04-15 08:26:03 UTC

C

ASME PTC 25-2008

ISBN-13: 978-0-7918-3169-4
ISBN-10: 0-7918-3169-8





C06108

opyright ASME International
vided by IHS under license with ASME
reproduction or networking permitted without license from IHS

Order Number: 02005095
Sold to:LHIP CO LTD [700166107362],
2014-04-15 08:26:03 UTC