2595512 0082159 115

ADOPTION NOTICE

ASME-Y14.8M, "Castings and Forgings", was adopted on 22-DEC-89 for use by the Department of Defense (DoD). Proposed changes by DoD activities must be submitted to the DoD Adopting Activity: Commander, US Army Armament, Munitions and Chemical Command (AMCCOM), U.S. Army Armament Research, Development and Engineering Center (ARDEC), ATTN: SMCAR-BAC-S, Bldg. 12, Picatinny Arsenal, NJ 07806-5000. DoD activities may obtain copies of this standard from the Standardization Document Order Desk, 700 Robbins Avenue, Building 4D, Philadelphia, PA 19111-5094. The private sector and other Government agencies may purchase copies from the American Society of Mechanical Engineers, 345 East 47th Street, New York, New York 10017.

Custodians:
Army - AR
Navy - OS
Air Force - 16

Adopting Activities:
Army - AR

Reviewer Activities:
Army - AT, AV, GL, ME
Air Force - 11, 99

FSC DRPR

DISTRIBUTION STATEMENT A: Approved for public release; distribution is unlimited.

Copyright ASME International
Provided by IHS under license with ASME
No reproduction or networking permitted without license from IHS
Not for Resale

STD.ASME Y14.8M-ENGL 1996 ■ 0759670 0578537 843 ■

ASME Y14.8M-1996
(Revision of ASME Y14.8M-1989)

CASTINGS AND FORGINGS

AN AMERICAN NATIONAL STANDARD

The American Society of Mechanical Engineers

Copyright ASME International
Provided by IHS under license with ASME
No reproduction or networking permitted without license from IHS

Not for Resale

ADOPTION NOTICE 1
22 December 1989 for
ASME Y14.8M-1989
18 September 1989

ADOPTION NOTICE

The American Society of Mechanical Engineers Document ASME Y14.8M-1989 was adopted on 22December 1989 and is approved for use by the Department of Defense (DoD). Copies of this document are stocked at the Naval Publications and Forms Center, 5801 Tabor Avenue, Philadelphia, PA 19120 for issue to DoD activities only. Other Government activities, contractors, private concerns, or other requestors must obtain the document from:

The American Society of Mechanical Engineers
United Engineering Center
345 East 47th Street
New York, NY 10017

or

The American National Standards Institute
1430 Broadway
New York, N.Y. 10018

TITLE OF DOCUMENT: Castings and Forgings
DATE OF SPECIFIC ISSUE ADOPTED: 15 September 1989
RELEASING INDUSTRY GROUP: The American Society of Mechanical Engineers

NOTICE: When reaffirmation, amendment, revision or cancellation of this standard is initially proposed, the industry group responsible for this standard shall inform the military coordinating activity of the proposed change and request participation.

Custodians:
Army – AR
Navy – OS
Air Force – 16

Military Coordinating Activity:
Army – AR

(Project DRPR-0308)

Review Activities:
Army – AV, ME, MI
Navy – AS, MC, SA, SH, TD, YD
Air Force – 11, 99

User Activities:
Army – AT, GL, CE, CR

AREA DRPR

DISTRIBUTION STATEMENT A. Approved for public release; distribution is unlimited.

Copyright ASME International
Provided by IHS under license with ASME
No reproduction or networking permitted without license from IHS
Not for Resale

The American Society of
Mechanical Engineers

AN AMERICAN NATIONAL STANDARD

CASTINGS AND FORGINGS

ASME Y14.8M-1996
(Revision of ASME Y14.8M-1989)

Copyright ASME International
Provided by IHS under license with ASME
No reproduction or networking permitted without license from IHS
Not for Resale

Date of Issuance: December 30, 1996

This Standard will be revised when the Society approves the issuance of a new edition. There will be no addenda or written interpretations of the requirements of this Standard issued to this edition.

ASME is the registered trademark of The American Society of Mechanical Engineers.

This code or standard was developed under procedures accredited as meeting the criteria for American National Standards. The Consensus Committee that approved the code or standard was balanced to assure that individuals from competent and concerned interests have had an opportunity to participate. The proposed code or standard was made available for public review and comment which provides an opportunity for additional public input from industry, academia, regulatory agencies, and the public-at-large.

ASME does not "approve," "rate," or "endorse" any item, construction, proprietary device, or activity.

ASME does not take any position with respect to the validity of any patent rights asserted in connection with any items mentioned in this document, and does not undertake to insure anyone utilizing a standard against liability for infringement of any applicable Letters Patent, nor assume any such liability. Users of a code or standard are expressly advised that the determination of the validity of any such patent rights, and the risk of the infringement of such rights, is entirely their own responsibility.

Participation by federal agency representative(s) or person(s) affiliated with industry is not to be interpreted as government or industry endorsement of this code or standard.

ASME accepts responsibility for only those interpretations issued in accordance with governing ASME procedures and policies which preclude the issuance of interpretations by individual volunteers.

No part of this document may be reproduced in any form,
in an electronic retrieval system or otherwise,
without the prior written permission of the publisher.

The American Society of Mechanical Engineering
345 East 47th Street New York, NY 10017

Copyright © 1996 by
THE AMERICAN SOCIETY OF MECHANICAL ENGINEERS
All Rights Reserved
Printed in U.S.A.

Copyright ASME International
Provided by IHS under license with ASME
No reproduction or networking permitted without license from IHS

Not for Resale

FOREWORD

(This Foreword is not part of ASME Y14.8M-1996.)

This revision of ASME Y14.8M-1989 includes changes to both the text and Figures to better illustrate drafting practices pertaining to casting/forging drawings. In addition, Figures were added to illustrate the definitions of terms used in the Standard.

This Standard does not intend to suggest that the types of casting and forgings presented herein are more important than those not presented, nor does it presume to restrict drawing content to only that which appears herein. Drawings must convey design intent and be complete enough that a designed part can be produced from them.

This Standard has been produced in a manner that is independent of the system of measurement to be used.

Suggestions for improvement of this Standard will be welcome. They should be sent to The American Society of Mechanical Engineers, Secretary, Y14 Main Committee, 345 East 47th Street, New York, NY 10017.

This revision was approved as an American National Standard on March 8, 1996.

Copyright ASME International
Provided by IHS under license with ASME
No reproduction or networking permitted without license from IHS
Not for Resale

ASME STANDARDS COMMITTEE Y14
Engineering Drawing and Related Documentation Practices

(The following is the roster of the Committee at the time of approval of this Standard.)

OFFICERS

F. Bakos, Jr., *Chair*
A. R. Anderson, *Vice Chair*
C. J. Gomez, *Secretary*

COMMITTEE PERSONNEL

A. R. Anderson, Dimensional Control Systems
F. Bakos, Jr., Eastman Kodak Co.
D. E. Bowerman, Copeland Corporation
J. V. Burleigh, The Boeing Company
R. A. Chadderdon, Southwest Consultants
M. E. Curtis, Jr., Rexnord Corporation
R. W. Debolt, Motorola, Government & Systems Technology Group
L. W. Foster, L.W. Foster Associates, Inc.
C. J. Gomez, The American Society of Mechanical Engineers
D. Hagler, E-Systems, Inc., Garland Division
C. G. Lance, Santa Cruz Technology Center
P. E. McKim, Caterpillar Inc.
C. D. Merkley, IBM Corporation
E. Niemiec, Westinghouse Electric Corporation
R.J. Polizz
D. L. Ragon, Deere & Company, John Deere Dubuque Works
R. P. Tremblay, U.S. Department of the Army, ARDEC
G. H. Whitmire, TEC/TREND
K. E. Weigandt, Sandia National Laboratory
P. Wreede, E-Systems, Inc.

SUBCOMMITTEE 8 — CASTINGS AND FORGINGS

R. A. Chadderdon, *Chair,* Southwest Consultants
D. E. Day, *Vice Chair,* Monroe Community College
C. J.Husum, *Secretary,* The Boeing Company
T. D. Benoit, Pratt & Whitney
R. E. Coombes, Caterpillar, Inc.
D. R. Gneiding, Parker Bertea Aerospace
E. Heimbach, Cercast Inc.
D. H. Honsinger, Benet Laboratory, Watervliet Arsenal
D. E. Jakstis, The Boeing Company
J. Kaminski, Woodward Governor Co.
A. A. Orris, Precision Products Inc.
H. A. Pearl, The Boeing Company
S. D. Pruss, General Motors Powertrain Group, Technical Resource Center
W. T. Richards, ALCOA Forged Products
J. A. Rivers, Product Technologies Inc.

Copyright ASME International
Provided by IHS under license with ASME
No reproduction or networking permitted without license from IHS
Not for Resale

CONTENTS

Foreword iii
Standards Committee Roster v

1 Scope, Definitions, and Terms 1
1.1 General 1
1.2 References 1
1.3 Definitions 1

2 Drawing Presentation 3
2.1 General 3
2.2 Drawings Containing Separate Views 3
2.3 Drawings Containing Combined Views 3
2.4 End Item Drawings 3

3 Drawing Requirements 7
3.1 General 7
3.2 Dimensions 7
3.3 As-Cast/As-Forged Surfaces 7
3.4 Corner Radii 7
3.5 Die Closure Tolerance 7
3.6 Draft Angle 7
3.7 Fillet Radii 7
3.8 Flash Extension 7
3.9 Forging Plane 7
3.10 Form Tolerances 7
3.11 Marking 7
3.12 Match Draft 12
3.13 Mismatch 12
3.14 Parting Lines 12
3.15 Sharp Corners 12
3.16 Grain Direction 12
3.17 Special Requirements 12
3.18 Profile Tolerances 12

4 Datum Referencing 23
4.1 General 23
4.2 Application 23
4.3 Datum Targets 23
4.4 Machining Datum Reference Frame 23
4.5 Tooling Centers and Tooling Holes 23
4.6 Equalizing Datums 23

Copyright ASME International
Provided by IHS under license with ASME
No reproduction or networking permitted without license from IHS
Not for Resale

5 Drawing Notes 37
5.1 General 37
5.2 Drawing Note Items 37

Figures

1-1 Fillet and Corner Radii 2
2-1 Separate Views Drawing 4
2-2 Combined Views Drawing 5
2-3 End Item Drawing 6
3-1(a) Die Closure Not Specified 8
3-1(b) Die Closure Specified and Parting Line Indicated 9
3-1(c) Die Closure Specified and Parting Line Not Indicated 10
3-2 Draft Construction 11
3-3(a) Datum Plane and Forging Plane Parallel 12
3-3(b) Defined Forging Plane Not Parallel to Datum Plane 12
3-4(a) Flash Extension 13
3-4(b) Flash Extension and Mismatch 13
3-5 Surface Straightness Control Illustrating Effect of Form Control Exemption 14
3-6 Flatness Control Illustrating Effect of Form Control Exemption 15
3-7 Match Draft 16
3-8 Mismatch Tolerance 17
3-9 Parting Line Locations 18
3-10 Grain Direction Specified 19
3-11 Special Requirements 20
3-12 Profile Tolerancing 21
4-1 Datum Targets Establishing a Datum Reference Frame 24
4-2 Datum Targets Within Same Die Segment 25
4-3 Datum Targets Located Opposite Machined Surfaces 25
4-4 Datum Target Location — Optimum Spacing Considerations 26
4-5 Optimum Spacing of Datum Targets 27
4-6 Datum Targets Offset From the Datum Plane 28
4-7 Effect of Draft and Parting Line on Datums 29
4-8 Placement of Repetitive Dimensions Affected by Draft 30
4-9 Machined Datum Features Located From Cast/Forged Datums 31
4-10 Tooling Centers Establishing an Axis 32
4-11 Tooling Centers Establishing Center Planes 33
4-12 Movable Datum Targets Establishing a Datum Center Plane 34
4-13 Movable Datum Targets Establishing Two Datum Center Planes 35
4-14 Equalized Datums Established by Fixed Datum Targets 36
4-15(a) Movable Datum Target Symbol Application 36
4-15(b) Movable Datum Target Symbol Form and Proportion 36

Appendices

A Glossary 39
A1 General 39
A2 Casting Terms 39
A3 Forging Terms 40

B Sample Notes 43
B1 General 43
B2 Sample Casting Notes 43
B3 Sample Forging Notes 43

Copyright ASME International
Provided by IHS under license with ASME
No reproduction or networking permitted without license from IHS
Not for Resale

C	**Profile Tolerance System for Dimensioning and Tolerancing Casting/Forging Drawings**	45
C1	General	45
C2	Profile Tolerance System	45
C3	Figures	45
C4	Drafting Practice	45
C5	Application to a Combined View (Casting/Forging and Machining Requirements) Drawing	46
D	**Sample Drawing**	55

Figures

C-1	Origin of Draft and Parting Line	48
C-2	Machine Allowance — Surface Without Draft	49
C-3	Machine Allowance — Surface With Draft	49
C-4	Machine Allowance — Portion of Surface With Draft	50
C-5	Machine Allowance — Chamfered Corner	51
C-6	Machine Allowance — Fillet	52
C-7	Combined View (Casting and Machining Requirements) Drawing	53
D-1	Precision Forging Drawing Sample	56

Copyright ASME International
Provided by IHS under license with ASME
No reproduction or networking permitted without license from IHS
Not for Resale

ENGINEERING DRAWING AND RELATED DOCUMENTATION PRACTICES

CASTINGS AND FORGINGS

1
Scope, Definitions, and Terms

1.1 General

This Standard covers definitions of terms and features unique to casting and forging technologies with recommendations for their uniform description and inclusion on engineering drawings and related documents. Unless otherwise specified, any reference to features, parts or processes shall be interpreted as applying to both castings and forgings. Castings and forgings are delineated as casting/forging throughout the Standard.

1.1.1 Units. The International System of Units (SI) is used in this Standard because SI units are expected to supersede United States (U.S.) customary units. Customary units could equally well be used without prejudice to the principles established.

1.1.2 Reference to This Standard. Where drawings are based on this Standard, this fact shall be noted on the drawings or in a document referenced on the drawings. References to this Standard shall state "ASME Y14.8M-1996."

1.1.3 Figures. The Figures in this Standard are intended only as illustrations to aid the user in understanding the principles and methods of drawing described in the text. The absence of a Figure illustrating the desired application is neither reason to assume inapplicability nor basis for drawing rejection. In some instances, Figures show added detail for emphasis; in other instances, Figures are incomplete by intent. Numerical values of dimensions and tolerances are illustrative only.

1.1.4 Notes. Notes herein in capital letters are intended to appear on drawings. Notes in lower case are explanatory only and are not intended to appear on drawings.

1.1.5 Dimensioning and Tolerancing. The methods of dimensioning and tolerancing shall be in accordance with ASME Y14.5M and this Standard.

1.2 References

Where the following American National Standard referred to in this Standard is superseded by a revision approved by the American National Standards Institute, the revision shall apply.

ASME Y14.5M-1994, Dimensioning and Tolerancing.

1.3 Definitions

The following terms are defined as their use applies in this Standard. Other commonly used casting/forging terms are defined in Appendix A.

corner radius (edge radius): the convex radius on the surface of a part connecting intersecting surfaces (see Fig. 1-1)

die closure: allowable part thickness variation caused by inconsistent mating of opposing segments of a mold or die (see Fig. 3-1)

draft: the taper (angle) applied to selected surfaces to aid in the removal of a part from a die or a pattern from a mold (see Fig. 3-2)

dress out: a localized depression on the surface of a forging that results when abrasive tools are used to remove surface discontinuities

fillet radius: the concave radius on the surface of a part connecting intersecting surfaces (see Fig. 1-1)

flash: excess material which results from leakage between mating surfaces of a mold or die (see Fig. 3-4)

flatnes: a condition of a surface having all elements in one plane (refer to ASME Y14.5M)

forging plane: a plane perpendicular to the forging direction. It normally coincides with the principal mating faces of a set of dies (see Fig. 3-3)

gate: a channel in a mold through which molten material flows into the mold cavity

Copyright ASME International
Provided by IHS under license with ASME
No reproduction or networking permitted without license from IHS
Not for Resale

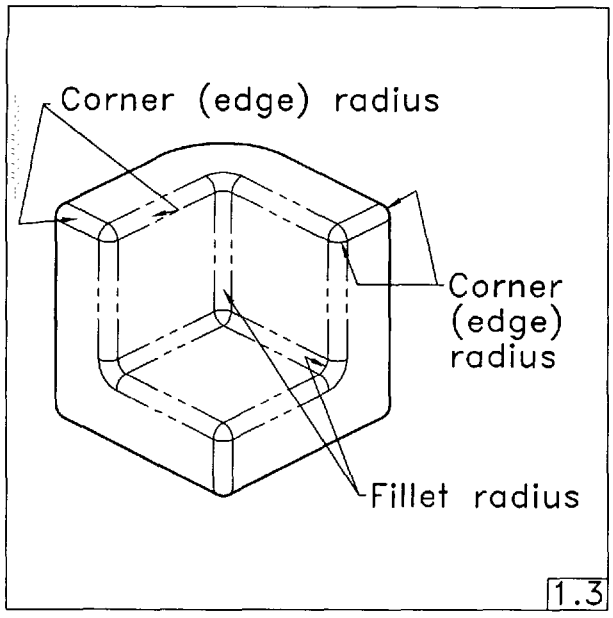

FIG. 1-1 FILLET AND CORNER RADII

grain direction: the predominant orientation of the fibrous crystalline structural units of wrought metals (see Fig. 3-10)

match draft: additional draft allowance permitted on matching surfaces at parting lines when the normal draft allowance would result in an offset of the surfaces at the parting line (see Fig. 3-7)

mismatch: the offset of features on a part caused by misalignment of opposing segments of a mold or die (see Fig. 3-8)

mold line: a line generated by the theoretical intersection of projected surfaces (see Fig. 3-2)

movable targets: two or more targets with a controlled simultaneous motion used for centering parts (see Para. 4.6, Figs. 4-4, 4-12, and 4-13)

parting line

(a) the separation between the mold or die segments. Flash, fins, or material seepage is usually produced on the part periphery where the parting line emerges.

(b) a line on the drawing representing the mated surfaces of the die or mold segments (see Fig. 3-9)

scale pit: a surface depression formed on a forging during the forging operation, due to scale in the dies

riser: a reservoir of molten metal connected to the casting to provide additional metal to the casting during solidification

straightness: a condition where an element of a surface or an axis is a straight line (refer to ASME Y14.5M)

Copyright ASME International
Provided by IHS under license with ASME
No reproduction or networking permitted without license from IHS
Not for Resale

STD.ASME Y14.8M-ENGL 1996 ■ 0759670 0578548 629 ■

2
Drawing Presentation

2.1 General

This Section establishes methods of preparing casting/forging drawings.

2.2 Drawings Containing Separate Views

The casting/forging requirements and the machining requirements are shown in separate views or on separate drawings. Phantom lines may be used on the casting/forging views to show the outline of the part configuration after machining (see Fig. 2-1).

2.3 Drawings Containing Combined Views

Both the casting/forging requirements and the machining requirements are shown in superimposed views. Phantom lines may be used to show the casting/forging outline (see Fig. 2-2). Notes and tolerances relative to casting/forging shall be distinguished from those relative to machining. Due to the possibility of conflicting casting/forging and machining requirements, combined view drawings should be used with caution.

2.4 End Item Drawings

An end item drawing defines either an individual part or assembly in its final or completed state. Surfaces may be cast/forged or machined to meet drawing requirements. Notes relative to machining shall be listed separately (see Fig. 2-3).

Copyright ASME International
Provided by IHS under license with ASME
No reproduction or networking permitted without license from IHS
Not for Resale

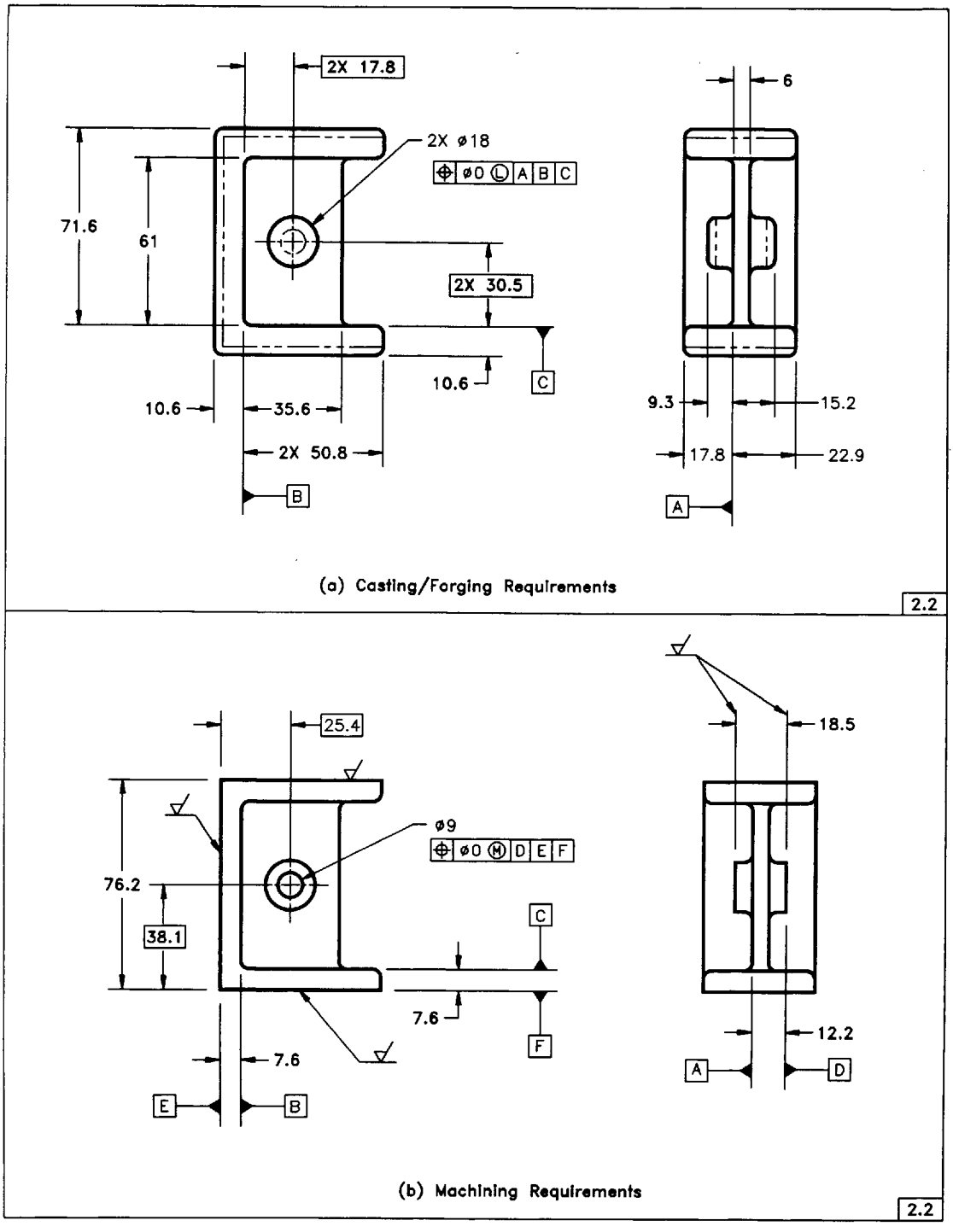

FIG. 2-1 SEPARATE VIEWS DRAWING

Copyright ASME International
Provided by IHS under license with ASME
No reproduction or networking permitted without license from IHS Not for Resale

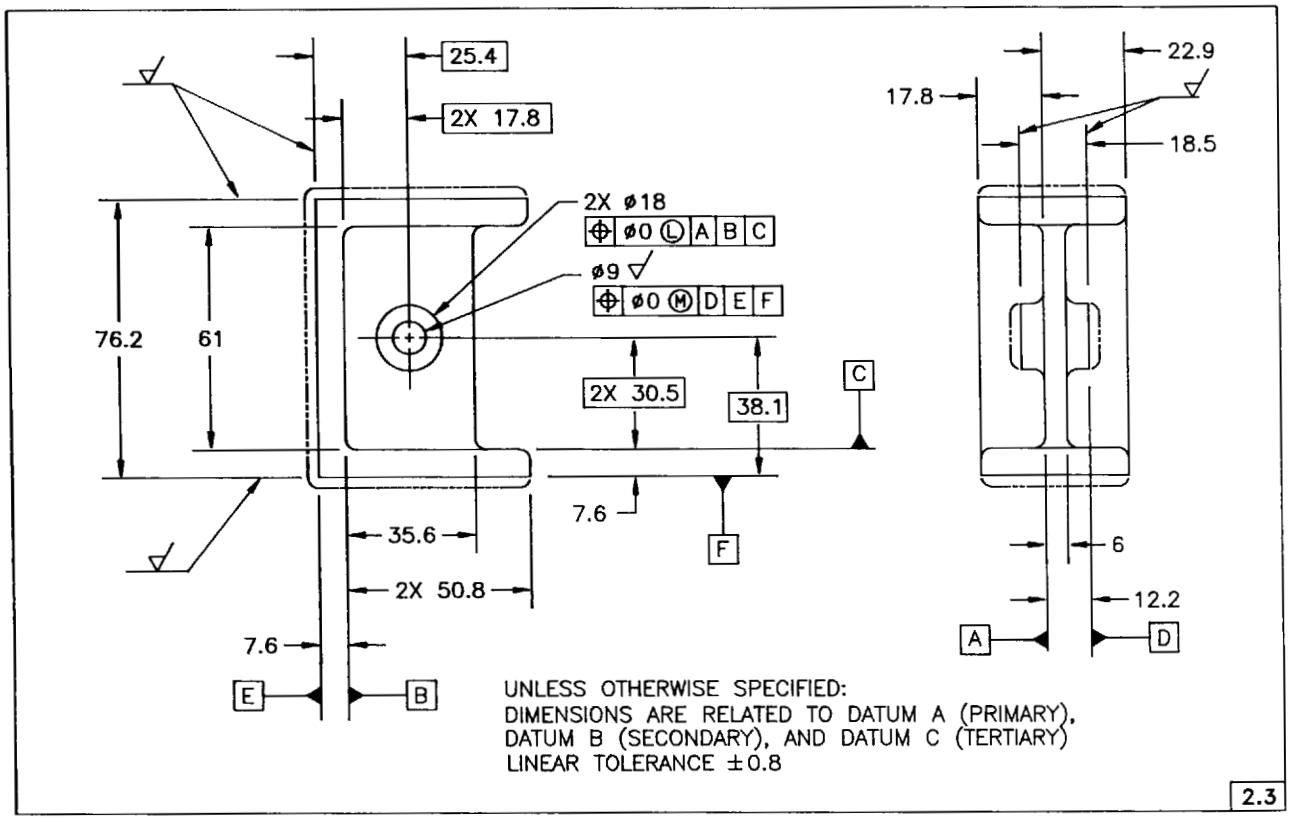

FIG. 2-2 COMBINED VIEWS DRAWING

Copyright ASME International
Provided by IHS under license with ASME
No reproduction or networking permitted without license from IHS
Not for Resale

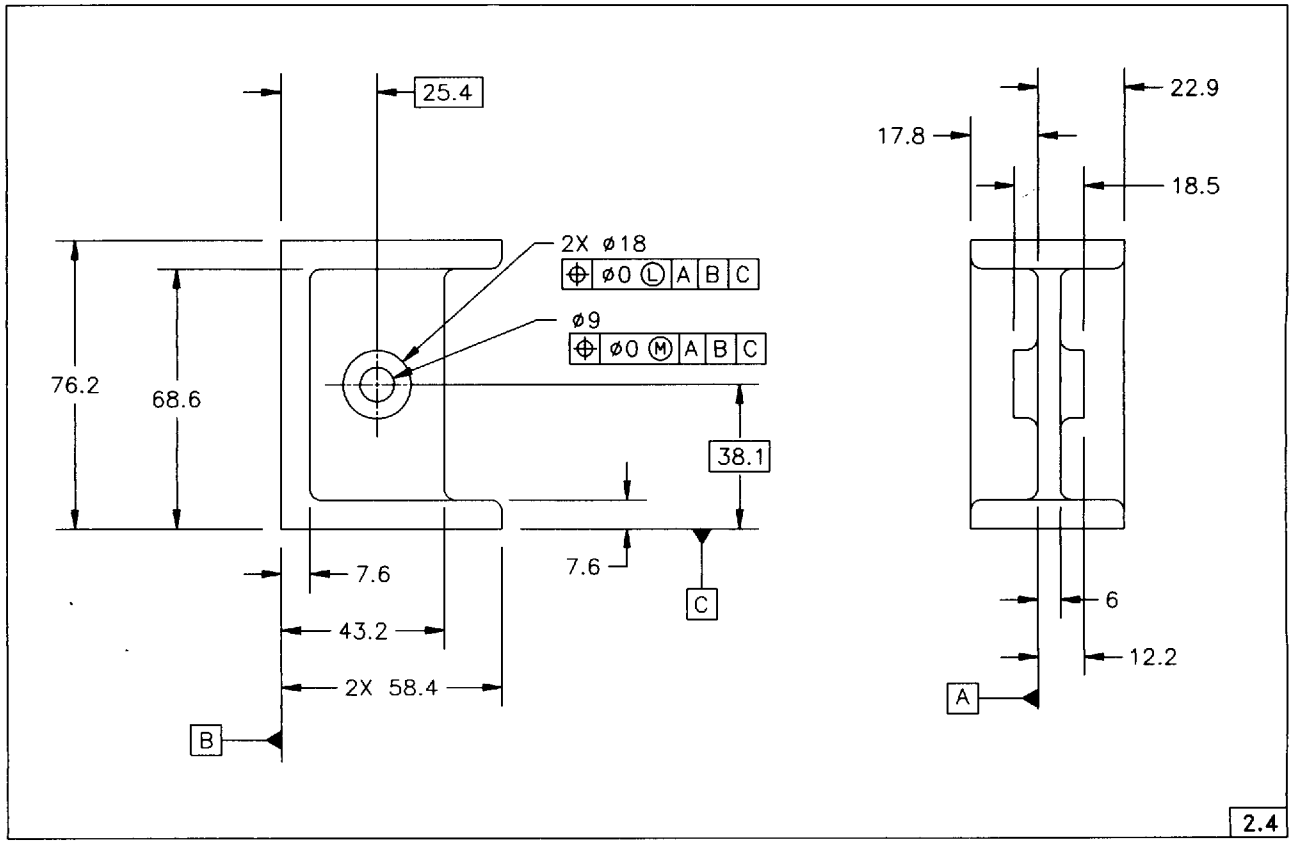

FIG. 2-3 END ITEM DRAWING

Copyright ASME International
Provided by IHS under license with ASME
No reproduction or networking permitted without license from IHS
Not for Resale

STD.ASME Y14.8M-ENGL 1996 ■ 0759670 0578552 05T ■

3
Drawing Requirements

3.1 General

This Section establishes items unique to castings/forgings not defined by other standards that should be defined on the drawing.

3.2 Dimensions

Dimensions are to the mold lines of features unless otherwise specified (see Fig. 3-2).

3.3 As-Cast/As-Forged Surfaces

Drawings shall specify whether machining as-cast/as-forged surfaces is permitted or prohibited (other than for removing gates, risers, flash, etc.). Where machining is permitted, the surface texture value shall be specified. Where a surface may retain gates, riser stubs, etc., a specified limit beyond the dimensional tolerance shall be defined. Gates, riser stubs, flash, etc., may exceed perfect form boundary at maximum material condition (MMC) unless otherwise specified.

3.4 Corner Radii

Corner radii size and tolerance shall be specified on the drawing.

3.5 Die Closure Tolerance

Die closure tolerance is applied to the appropriate dimensions [see Figs. 3-1(a), (b), and (c)].

3.6 Draft Angle

Draft angle and tolerance shall be specified. Draft angle shall be accounted for in determining datum targets and datum positions (see para. 4.3.2). Draft may be shown for drawing clarity (see Figs. 3-2 and 4-6). Draft angle is related to the forging plane, not the datum plane [see Figs. 3-3(a) and (b)]. Draft may exceed perfect form boundary at MMC unless otherwise specified.

3.7 Fillet Radii

Fillet radii size and tolerance shall be specified on the drawing.

3.8 Flash Extension

The limits of permissible flash extension shall be specified on the drawing. Flash extension may exceed perfect form boundary at MMC unless otherwise specified [see Figs. 3-4(a) and (b)].

3.9 Forging Plane

The forging plane shall be indicated as an extension line on the forging drawing (see Fig. 3-3). The orientation of the forging plane shall be defined if it is not parallel to a datum plane [see Fig. 3-3(b)].

3.10 Form Tolerances

Form tolerances, such as flatness, straightness and profile shall be specified where applicable. Unless noted otherwise, the perfect form boundary at MMC established by dimensional limits shall not be exceeded by the addition of form tolerances. The perfect form boundary exemption may be used as necessary to permit form tolerances to exceed the size tolerance (see Fig. 3-5 or Fig. 3-6).

3.11 Marking

Casting/forging drawings shall define applicable identification information such as:

(a) type of marking (raised, depressed, rubber stamp, etc.);
(b) location of marking;
(c) casting/forging part number;
(d) material identification;
(e) heat/lot/melt number, date code;
(f) serial number;
(g) foundry or forging manufacturer identification;
(h) equipment identification (pattern, die number, etc.).

Copyright ASME International
Provided by IHS under license with ASME
No reproduction or networking permitted without license from IHS
Not for Resale

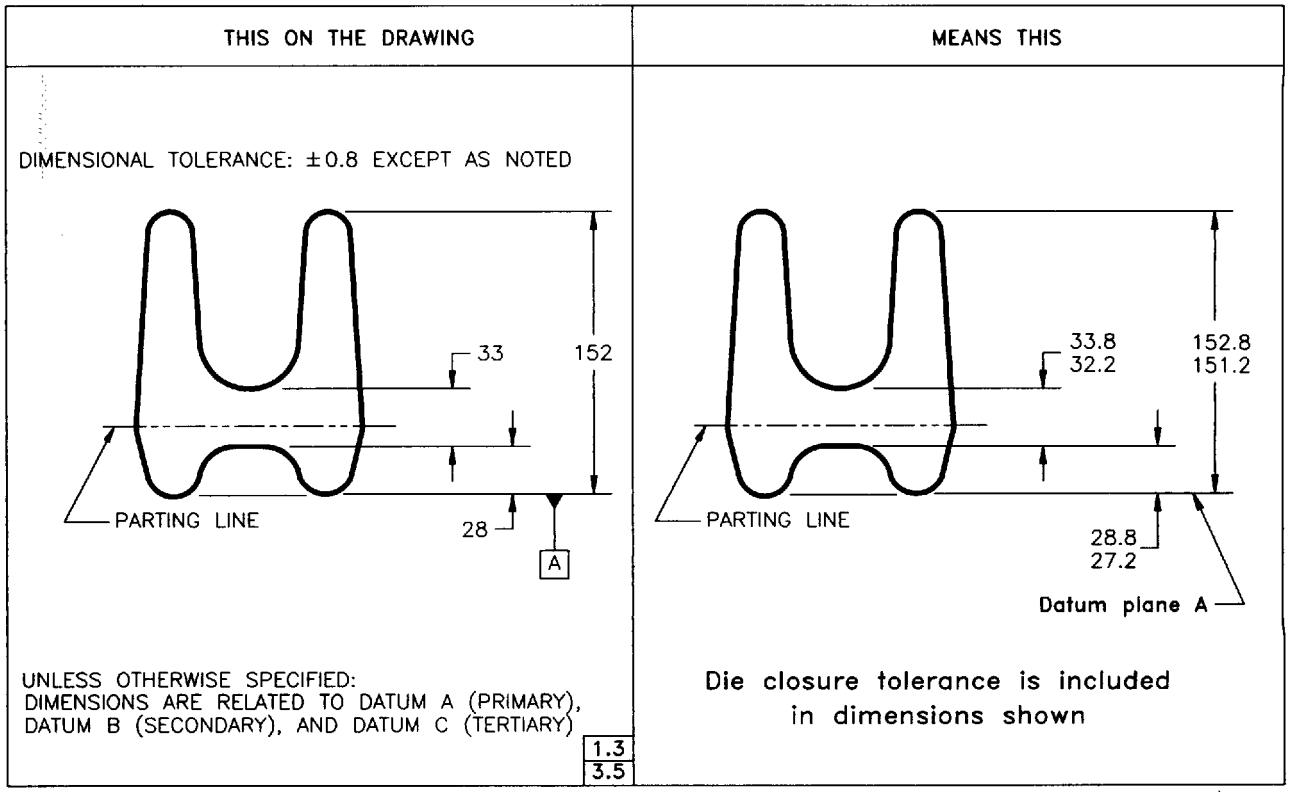

FIG. 3-1(a) DIE CLOSURE NOT SPECIFIED

Copyright ASME International
Provided by IHS under license with ASME
No reproduction or networking permitted without license from IHS
Not for Resale

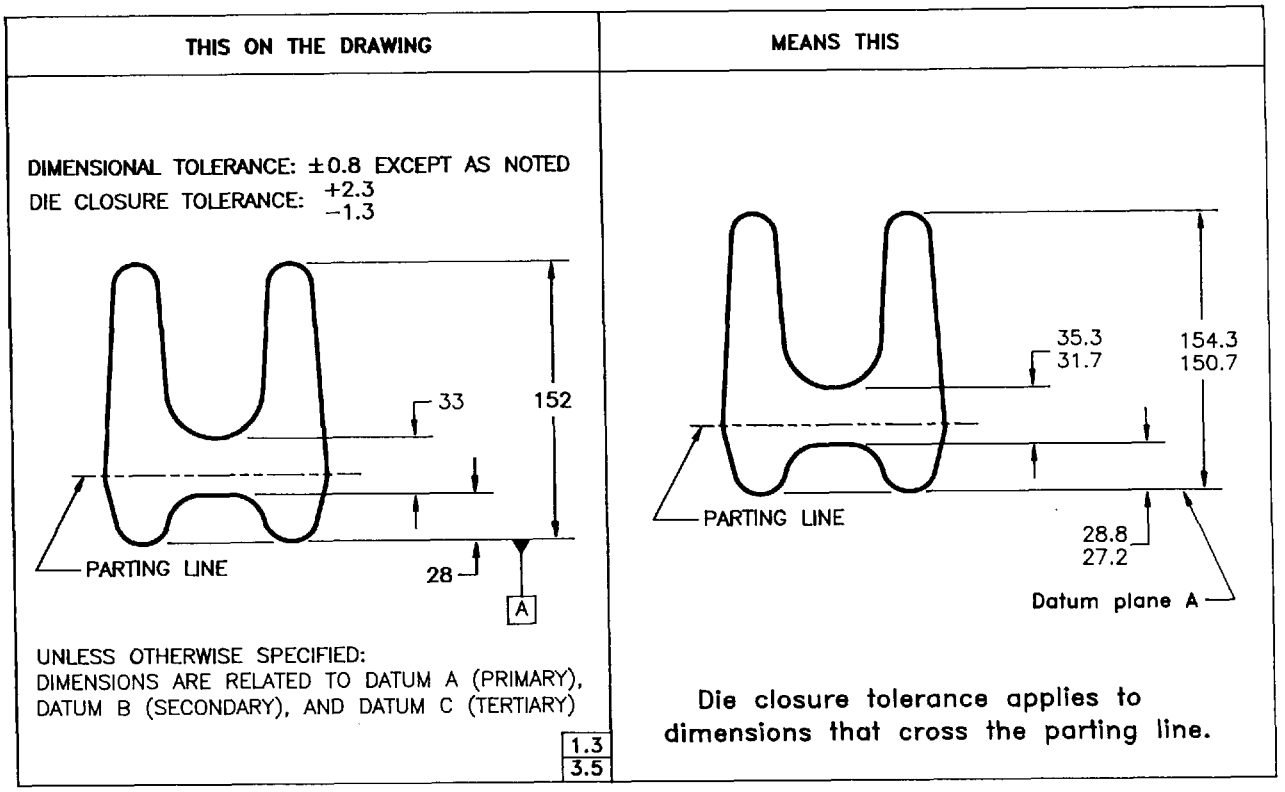

FIG. 3-1(b) DIE CLOSURE SPECIFIED AND PARTING LINE INDICATED

Copyright ASME International
Provided by IHS under license with ASME
No reproduction or networking permitted without license from IHS
Not for Resale

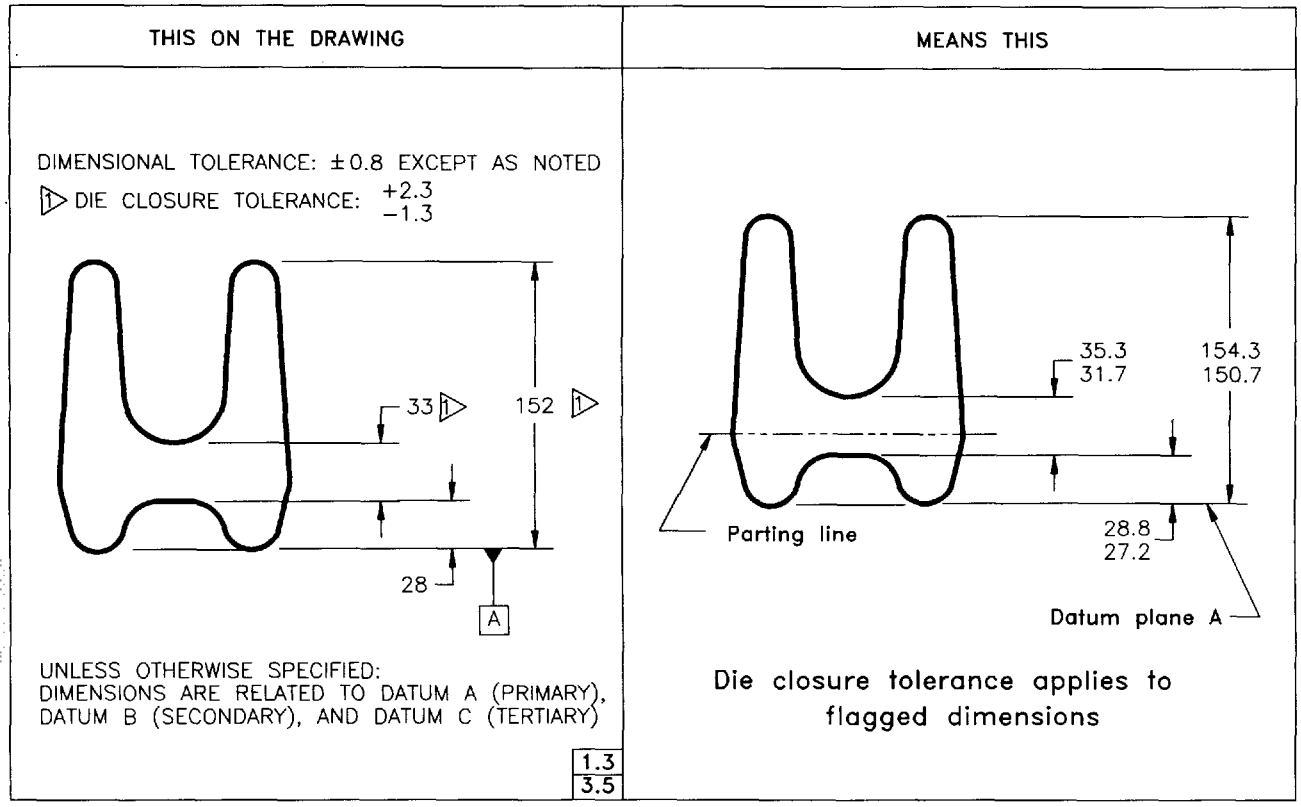

FIG. 3-1(c) DIE CLOSURE SPECIFIED AND PARTING LINE NOT INDICATED

Copyright ASME International
Provided by IHS under license with ASME
No reproduction or networking permitted without license from IHS
Not for Resale

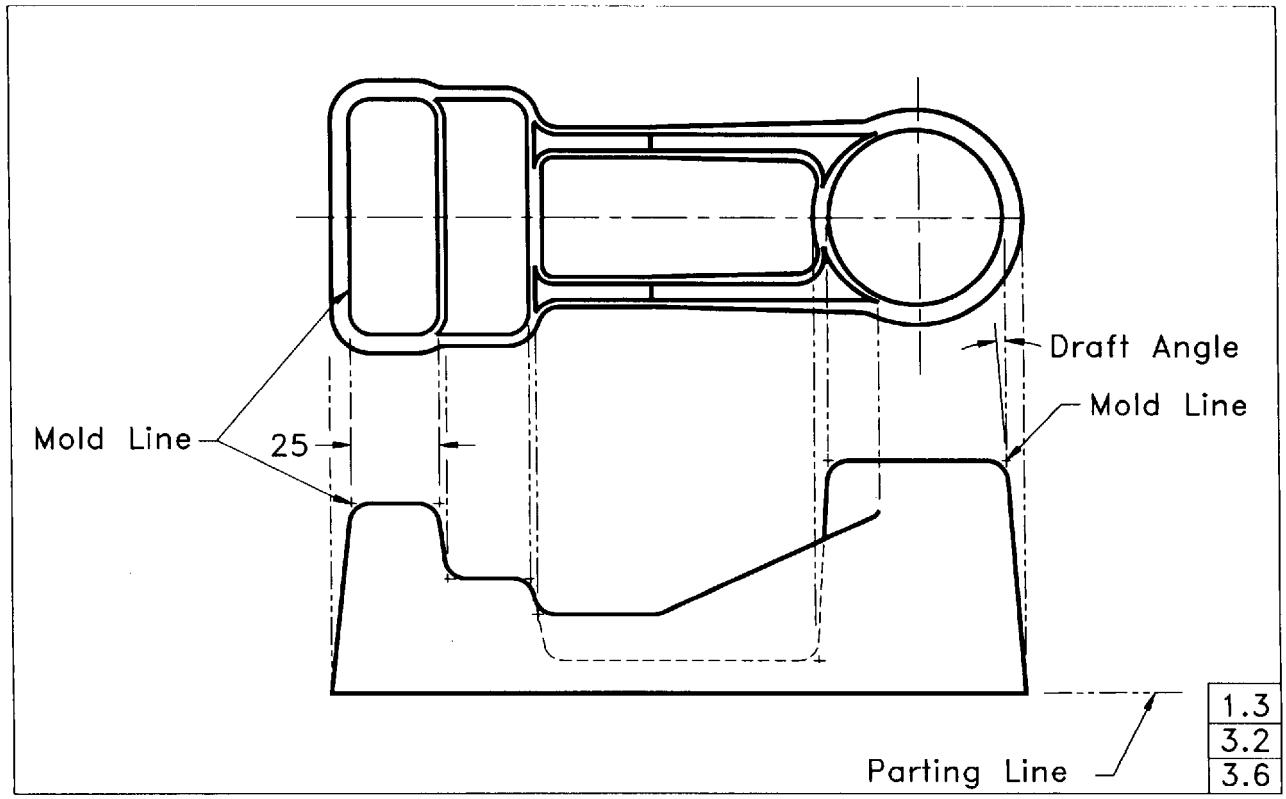

FIG. 3-2 DRAFT CONSTRUCTION

Copyright ASME International
Provided by IHS under license with ASME
No reproduction or networking permitted without license from IHS
Not for Resale

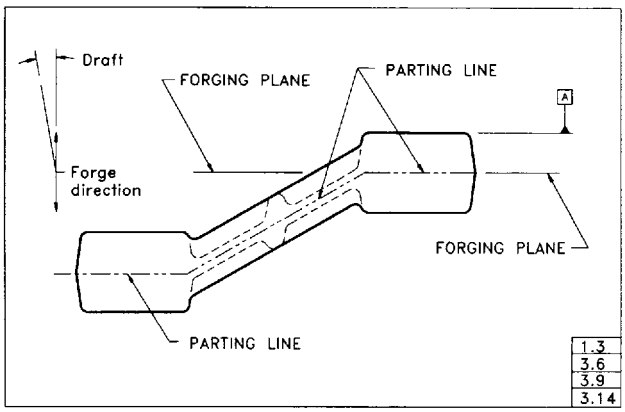

FIG. 3-3(a) DATUM PLANE AND FORGING PLANE PARALLEL

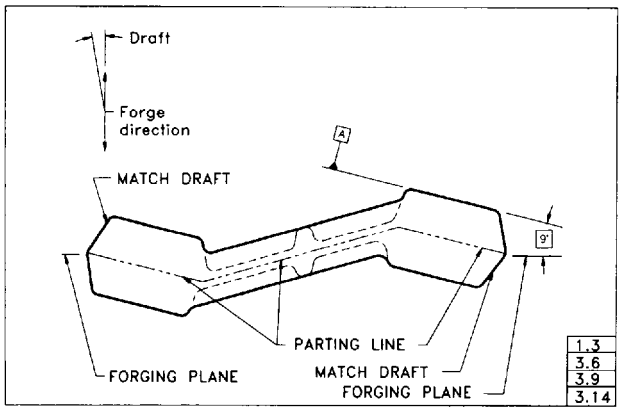

FIG. 3-3(b) DEFINED FORGING PLANE NOT PARALLEL TO DATUM PLANE

3.12 Match Draft

Match draft shall be specified where applicable (see Fig. 3-7).

3.13 Mismatch

Mismatch, where applicable, shall be specified as a maximum value. Mismatch may exceed perfect form boundary at MMC, unless otherwise noted (see Fig. 3-8).

3.14 Parting Lines

Forging parting lines should be shown on the drawing and depicted as a phantom line extending beyond the part in applicable views. Parting lines, where shown, shall be identified (see Fig. 3-3 and Fig. 3-9). Parting lines are generally not shown on casting drawings.

3.15 Sharp Corners

Casting/forging drawings shall specify the requirements of corners shown sharp.

3.16 Grain Direction

Where a grain direction requirement is specified on the drawing, it shall be shown in the appropriate view (see Fig. 3-10).

3.17 Special Requirements

Areas of a casting/forging may be defined as special requirement areas. A labeled chain line and appropriate notes designate the area's location and special requirement such as high stress, close flash trim, radiographic grade, etc. (see Fig. 3-11).

3.18 Profile Tolerances

The profile tolerance system uses datum reference frames, basic dimensions, and geometric profile of a surface tolerance to define and control cast/forged surfaces. The use of profile of a surface tolerance requires that the profile tolerance value for each surface be determined by including tolerances associated with cast/forged processes. Where it is desirable to account for specific variations such as die closure, mismatch, size, and form on the field of the drawing, a combination of toleranced and basic dimensions utilizing profile tolerancing may be used (see Fig. 3-12).

Copyright ASME International
Provided by IHS under license with ASME
No reproduction or networking permitted without license from IHS
Not for Resale

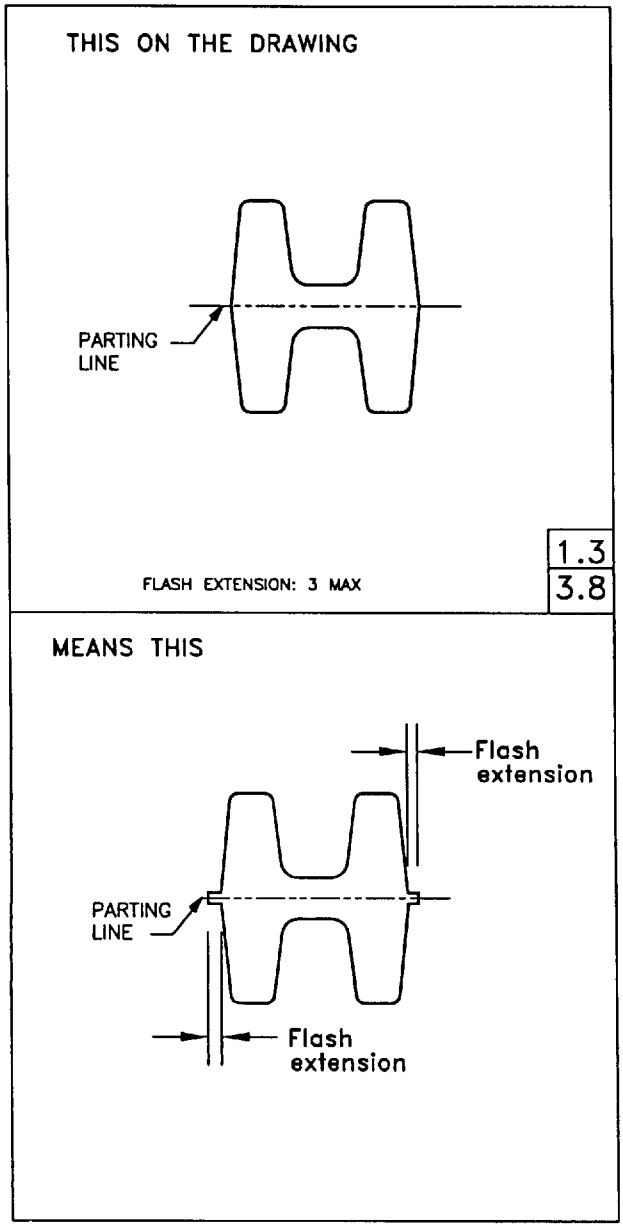

FIG. 3-4(a) FLASH EXTENSION

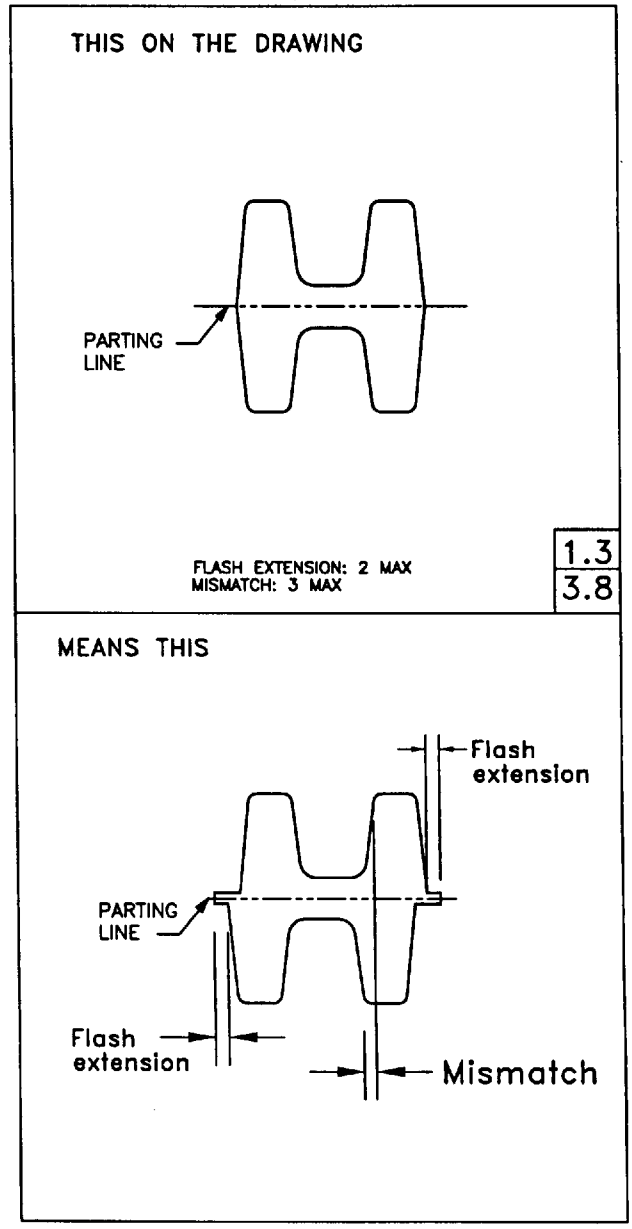

FIG. 3-4(b) FLASH EXTENSION AND MISMATCH

Copyright ASME International
Provided by IHS under license with ASME
No reproduction or networking permitted without license from IHS
Not for Resale

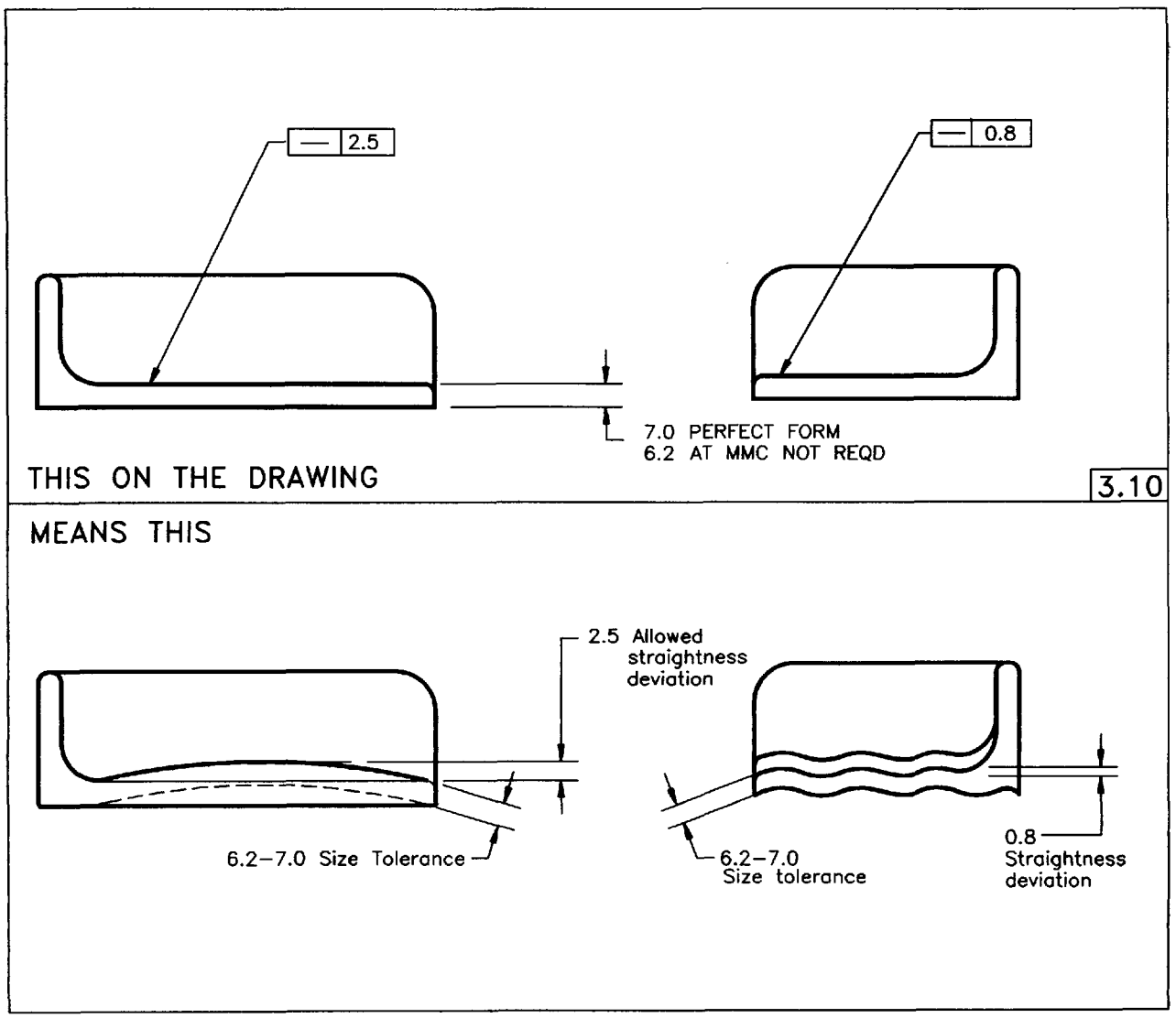

FIG. 3-5 SURFACE STRAIGHTNESS CONTROL ILLUSTRATING EFFECT OF FORM CONTROL EXEMPTION

Copyright ASME International
Provided by IHS under license with ASME
No reproduction or networking permitted without license from IHS
Not for Resale

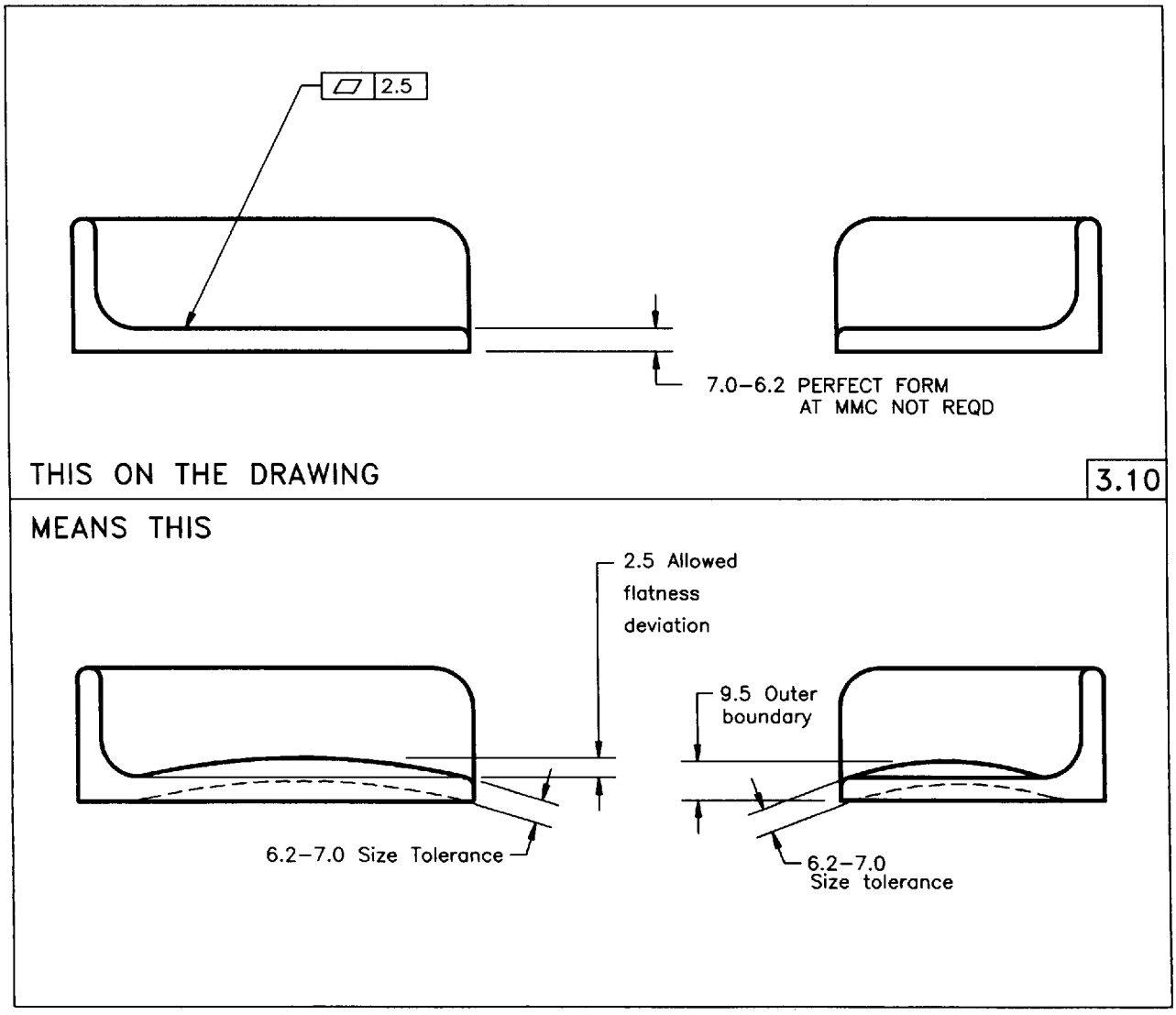

FIG. 3-6 FLATNESS CONTROL ILLUSTRATING EFFECT OF FORM CONTROL EXEMPTION

Copyright ASME International
Provided by IHS under license with ASME
No reproduction or networking permitted without license from IHS
Not for Resale

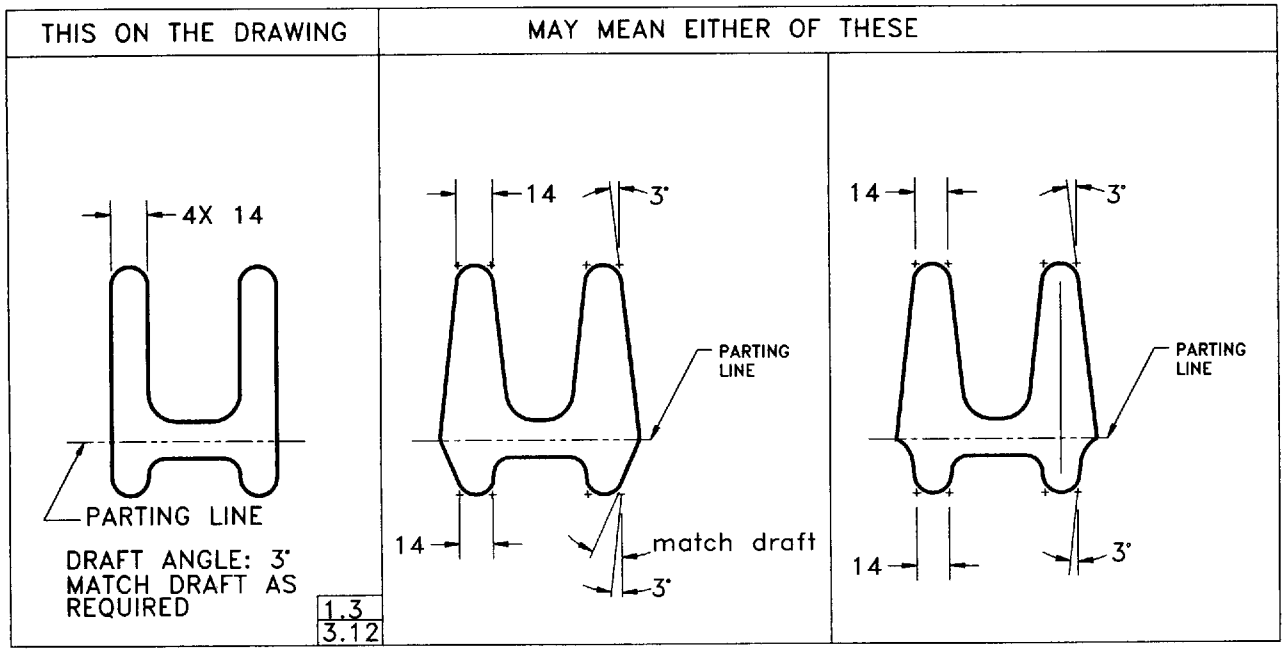

FIG. 3-7 MATCH DRAFT

Copyright ASME International
Provided by IHS under license with ASME
No reproduction or networking permitted without license from IHS
Not for Resale

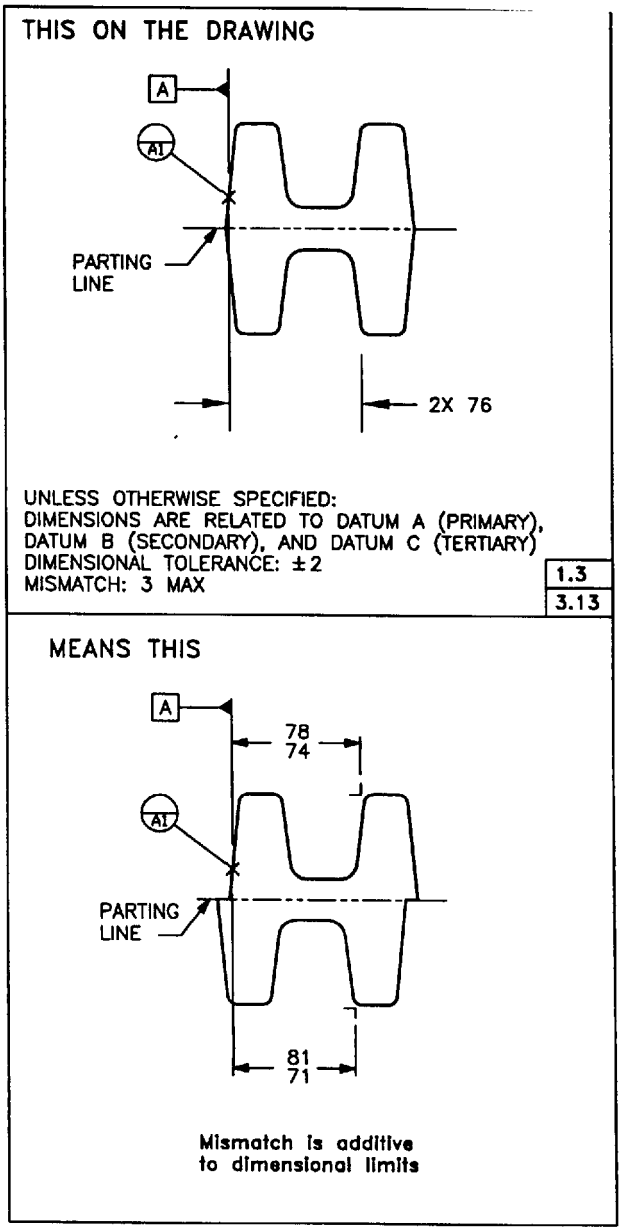

FIG. 3-8 MISMATCH TOLERANCE

Copyright ASME International
Provided by IHS under license with ASME
No reproduction or networking permitted without license from IHS
Not for Resale

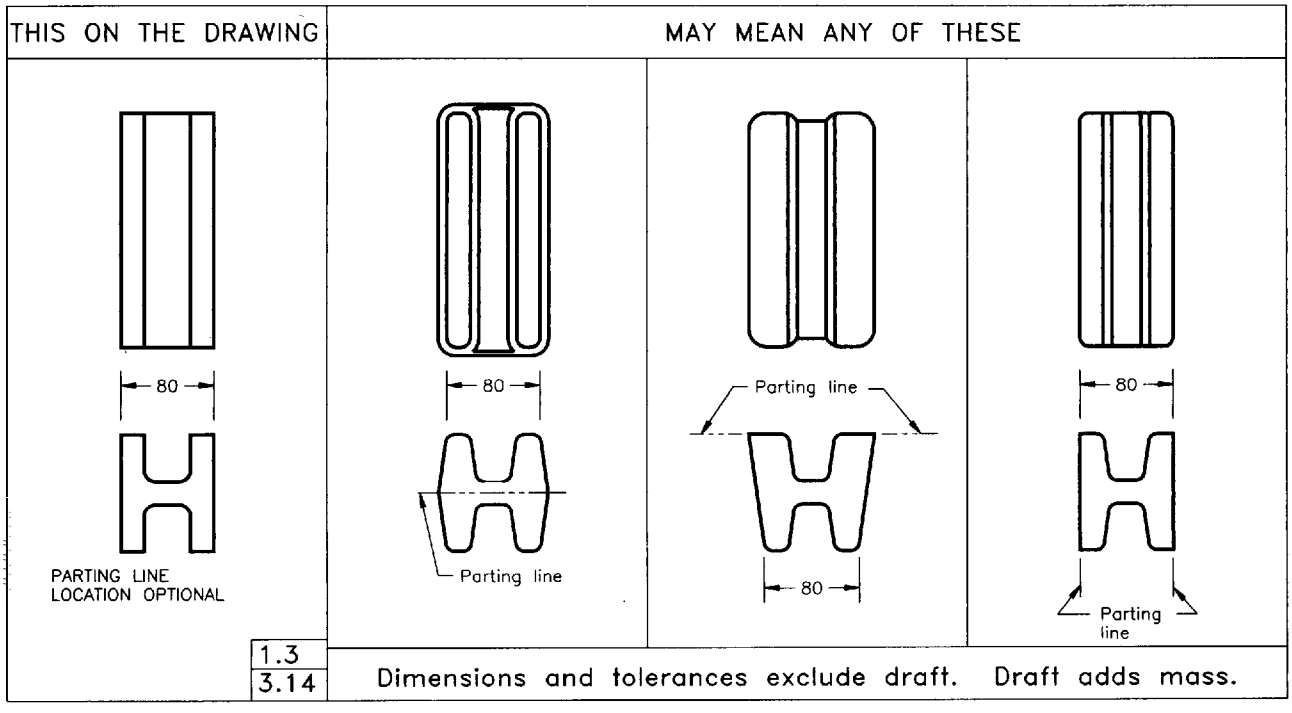

FIG. 3-9 PARTING LINE LOCATIONS

Copyright ASME International
Provided by IHS under license with ASME
No reproduction or networking permitted without license from IHS
Not for Resale

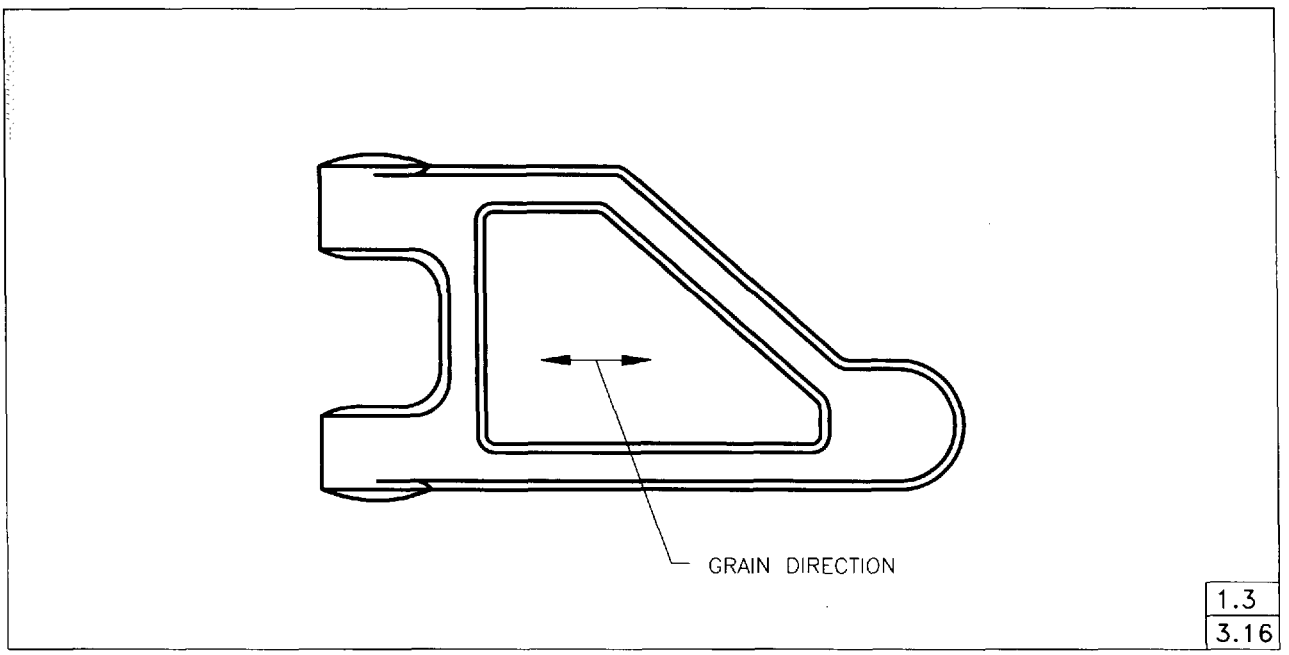

FIG. 3-10 GRAIN DIRECTION SPECIFIED

Copyright ASME International
Provided by IHS under license with ASME
No reproduction or networking permitted without license from IHS
Not for Resale

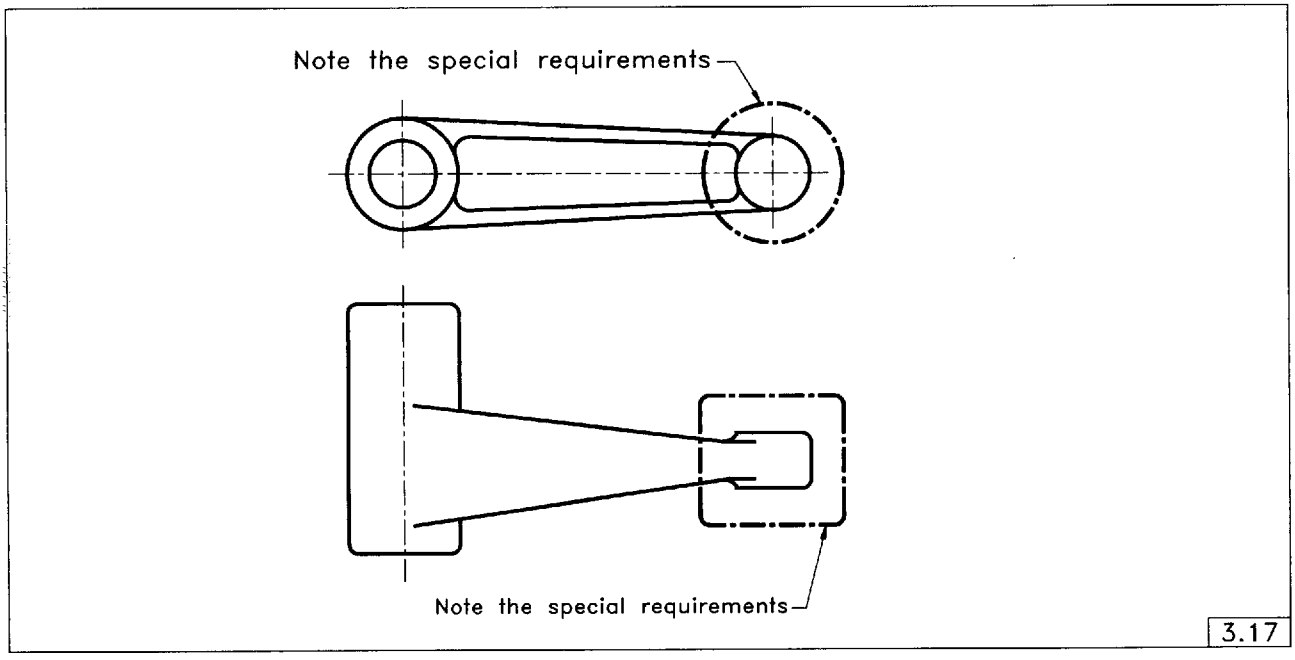

FIG. 3-11 SPECIAL REQUIREMENTS

Copyright ASME International
Provided by IHS under license with ASME
No reproduction or networking permitted without license from IHS
Not for Resale

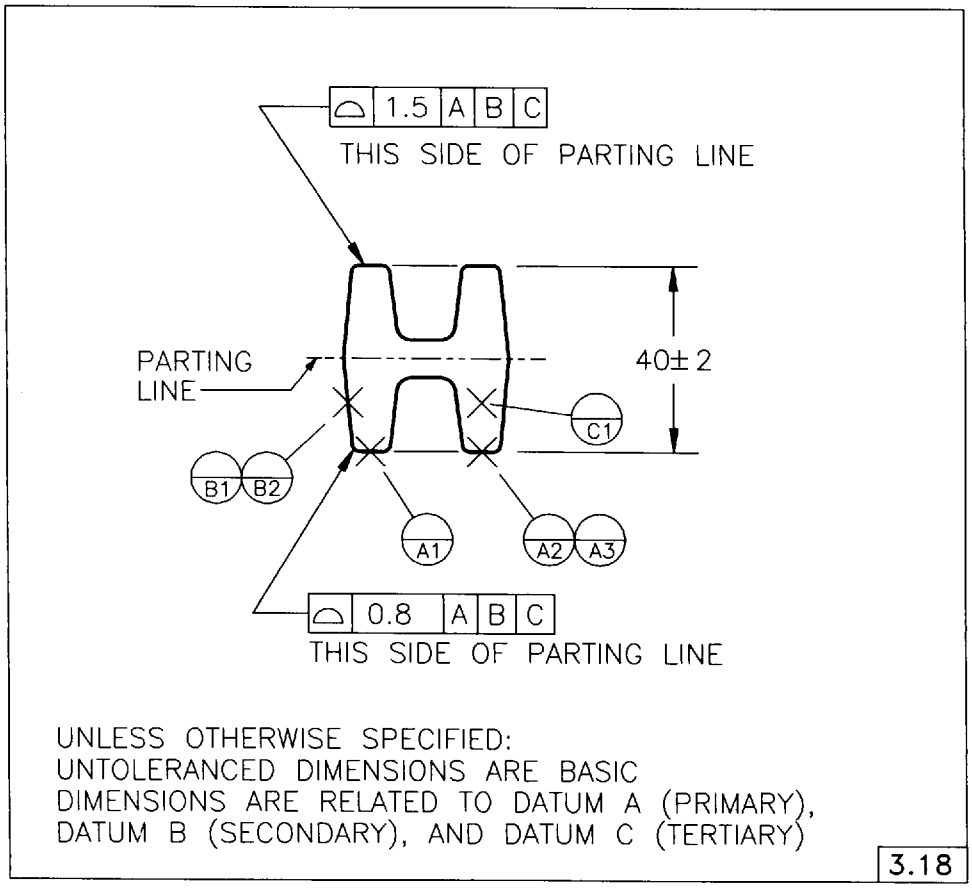

FIG. 3-12 PROFILE TOLERANCING

Copyright ASME International
Provided by IHS under license with ASME
No reproduction or networking permitted without license from IHS
Not for Resale

STD.ASME Y14.8M-ENGL 1996 ■ 0759670 0578567 580 ■

4
Datum Referencing

4.1 General

This Section establishes the principle of datum referencing as applied to castings/forgings. It contains the criteria for selecting and designating features of a cast/forged part to establish the datum reference frame and transition to the finished part.

4.2 Application

Cast/forged features should be dimensioned from a single datum reference frame of three mutually perpendicular planes established by datum targets or datum features (see Fig. 4-1).

4.3 Datum Targets

Because of cast/forged irregular surfaces, the datum reference frame should be established by datum targets which are designated points, lines, or areas defined on the casting/forging drawing (see Fig. 4-5). Some parts may not be suitable for the datum target dimensioning system due to size or configuration.

4.3.1 Datum Target Location. Datum targets should be located as follows:

(a) on features produced by one segment of a die or pattern (see Fig. 4-2) except in the case of equalizing datum targets (see Fig. 4-4);

(b) on features opposite machining cuts which establish subsequent machining reference frame (see Fig. 4-3);

(c) on features not subject to processing variables, such as parting lines, flash extensions, etc.;

(d) on features not subsequently altered or removed;

(e) with optimum spacing considering function and producibility (see Fig. 4-5);

(f) on their respective datum planes except where they establish:

(1) an axis;

(2) a center plane (see Fig. 4-4);

(3) a plane where area or location requires one or more targets offset from the datum features (see Fig. 4-6).

4.3.2 Effect of Draft and Parting Lines. The relationship of features of a part to datums established by targets can be affected by draft and parting lines (see Fig. 4-7).

4.3.3 Placement of Repetitive Dimensions. Repetitive dimensions should not originate from datum planes established by datum targets which are affected by draft unless the effect of draft is shown on the drawing (see Fig. 4-8).

4.4 Machining Datum Reference Frame

A machining datum reference frame should be established from a cast/forged datum reference frame for subsequent machining (see Fig. 4-9).

4.5 Tooling Centers and Tooling Holes

A datum axis (see Figs. 4-10 and 4-11) may be established by tooling centers or tooling holes and the centers or holes on the part are designated as datum features.

4.6 Equalizing Datums

Where it is desirable to center a casting/forging, the application of equalizing datums should be considered. The associated datum plane or axis may be identified by note. Figure 4-12 illustrates the application of an equalizing datum established by two fixed datum targets, Y1 and Y2, and two movable targets, X1 and X2. Figure 4-13 illustrates the establishment of two equalized datums resulting from datum Y targets being movable. Figure 4-14 illustrates the establishment of two equalized datums resulting from six fixed datum targets.

4.6.1 Movable Targets. The readability of a drawing may be improved by indicating movable datum targets. Figures 4-15(a) and (b) illustrate the movable target symbol. Figures 4-4, 4-12, and 4-13 illustrate applications of the movable datum target symbol. Where movable targets are used, RFS applies.

Copyright ASME International
Provided by IHS under license with ASME
No reproduction or networking permitted without license from IHS
Not for Resale

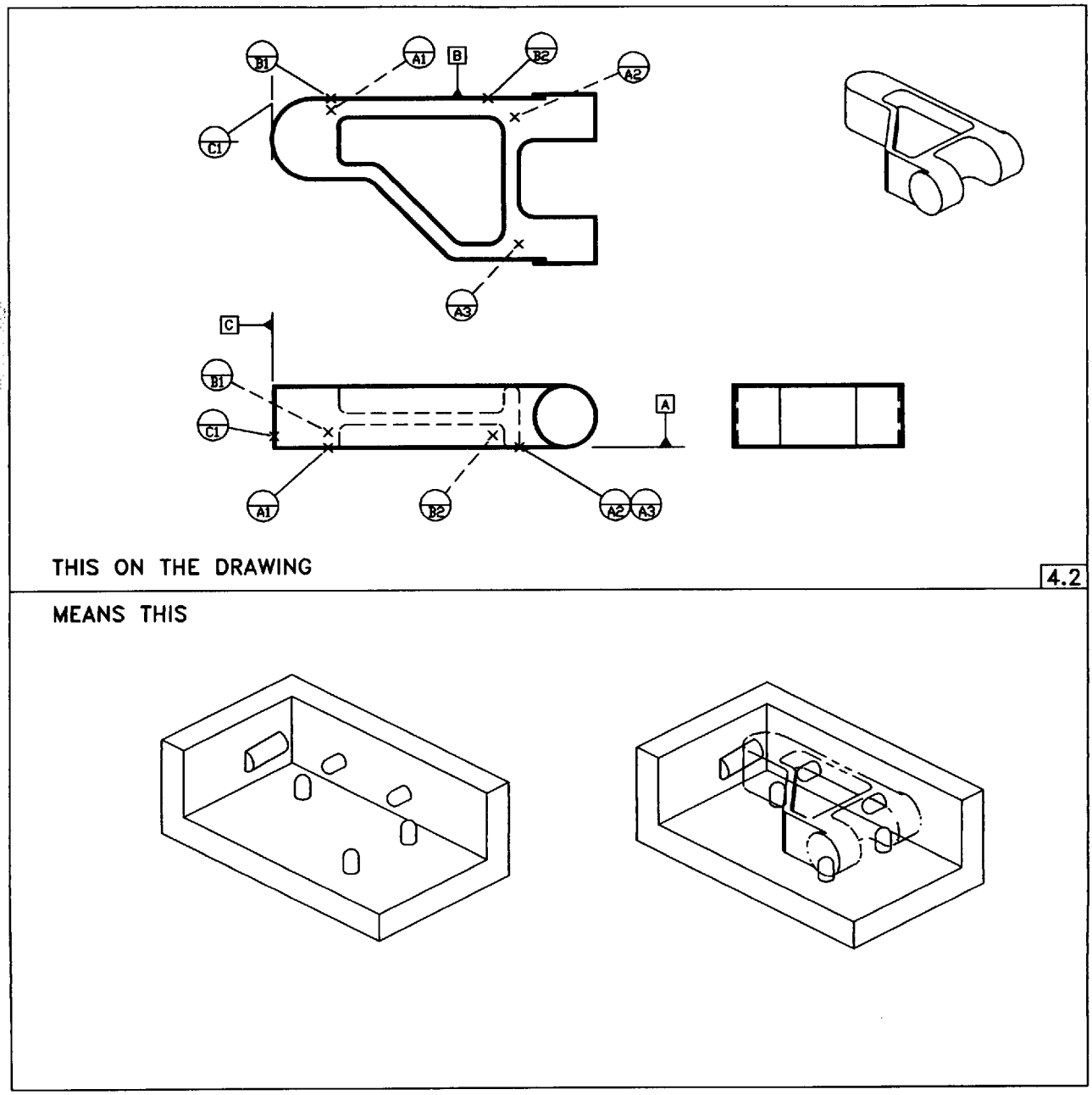

FIG. 4-1 DATUM TARGETS ESTABLISHING A DATUM REFERENCE FRAME

Copyright ASME International
Provided by IHS under license with ASME
No reproduction or networking permitted without license from IHS Not for Resale

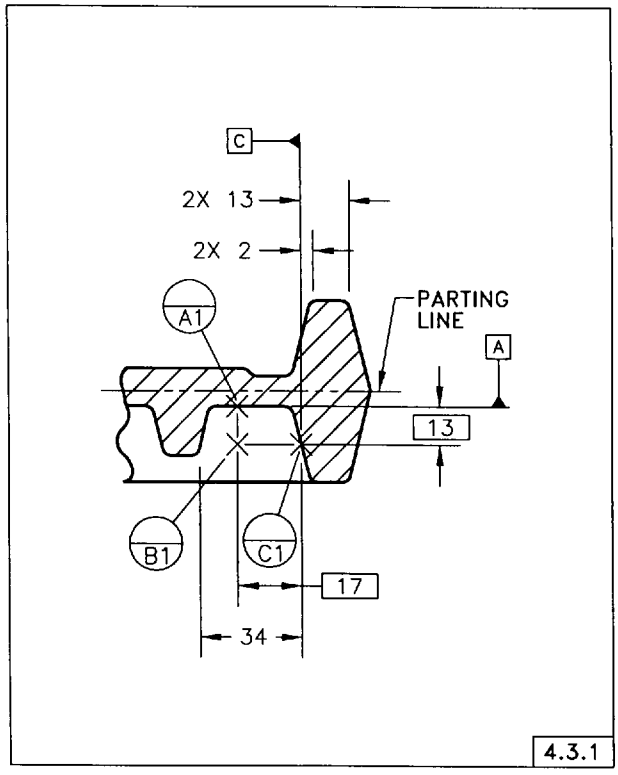

FIG. 4-2 DATUM TARGETS WITHIN SAME DIE SEGMENT

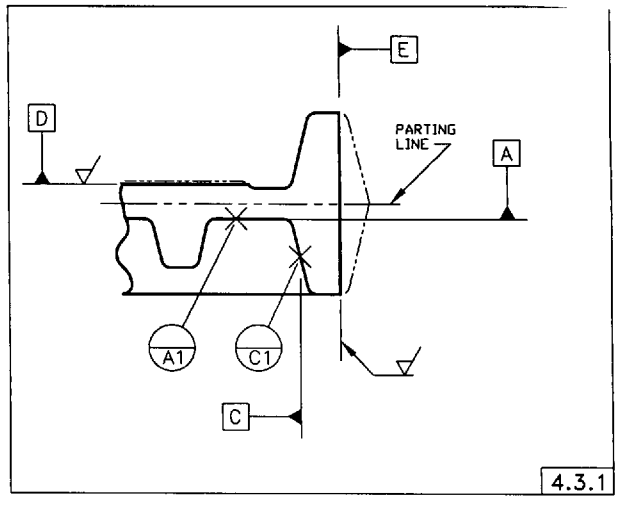

FIG. 4-3 DATUM TARGETS LOCATED OPPOSITE MACHINED SURFACES

Copyright ASME International
Provided by IHS under license with ASME
No reproduction or networking permitted without license from IHS
Not for Resale

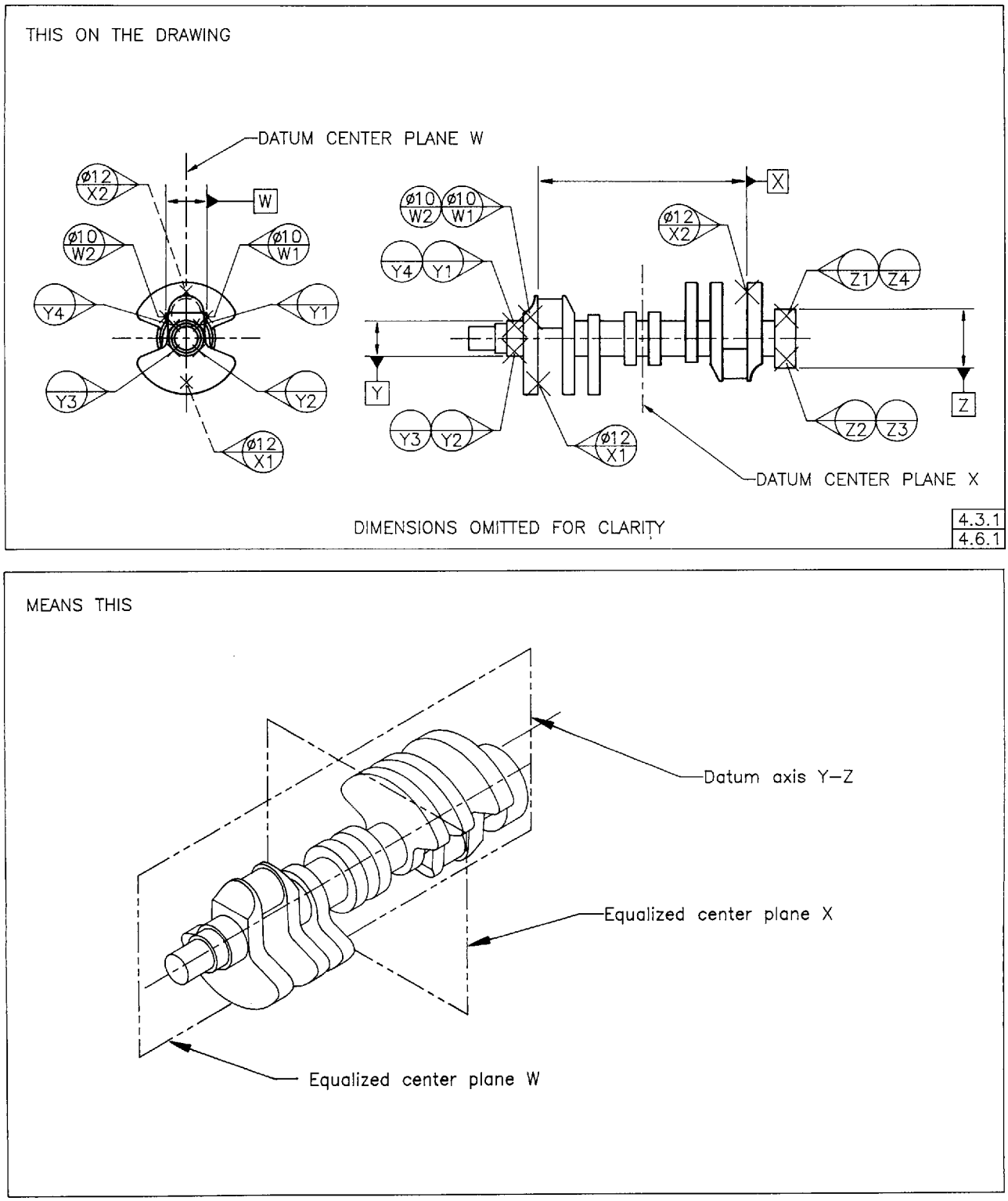

FIG. 4-4 DATUM TARGET LOCATION — OPTIMUM SPACING CONSIDERATIONS

Copyright ASME International
Provided by IHS under license with ASME
No reproduction or networking permitted without license from IHS Not for Resale

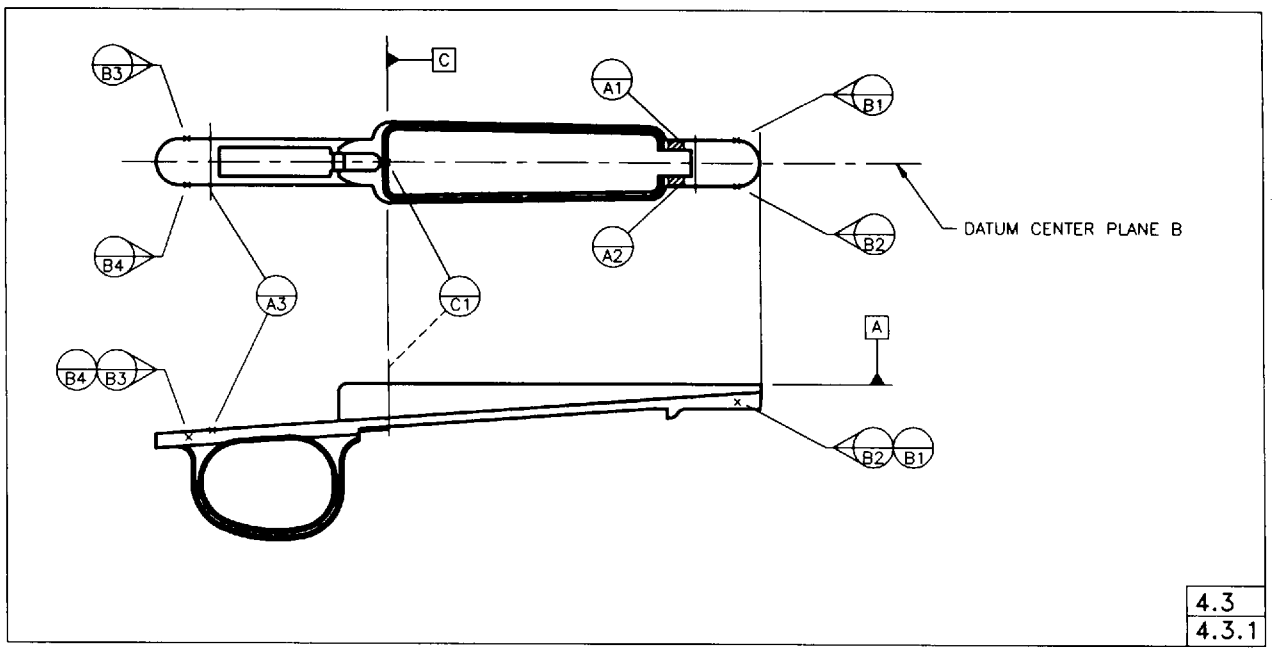

FIG. 4-5 OPTIMUM SPACING OF DATUM TARGETS

Copyright ASME International
Provided by IHS under license with ASME
No reproduction or networking permitted without license from IHS Not for Resale

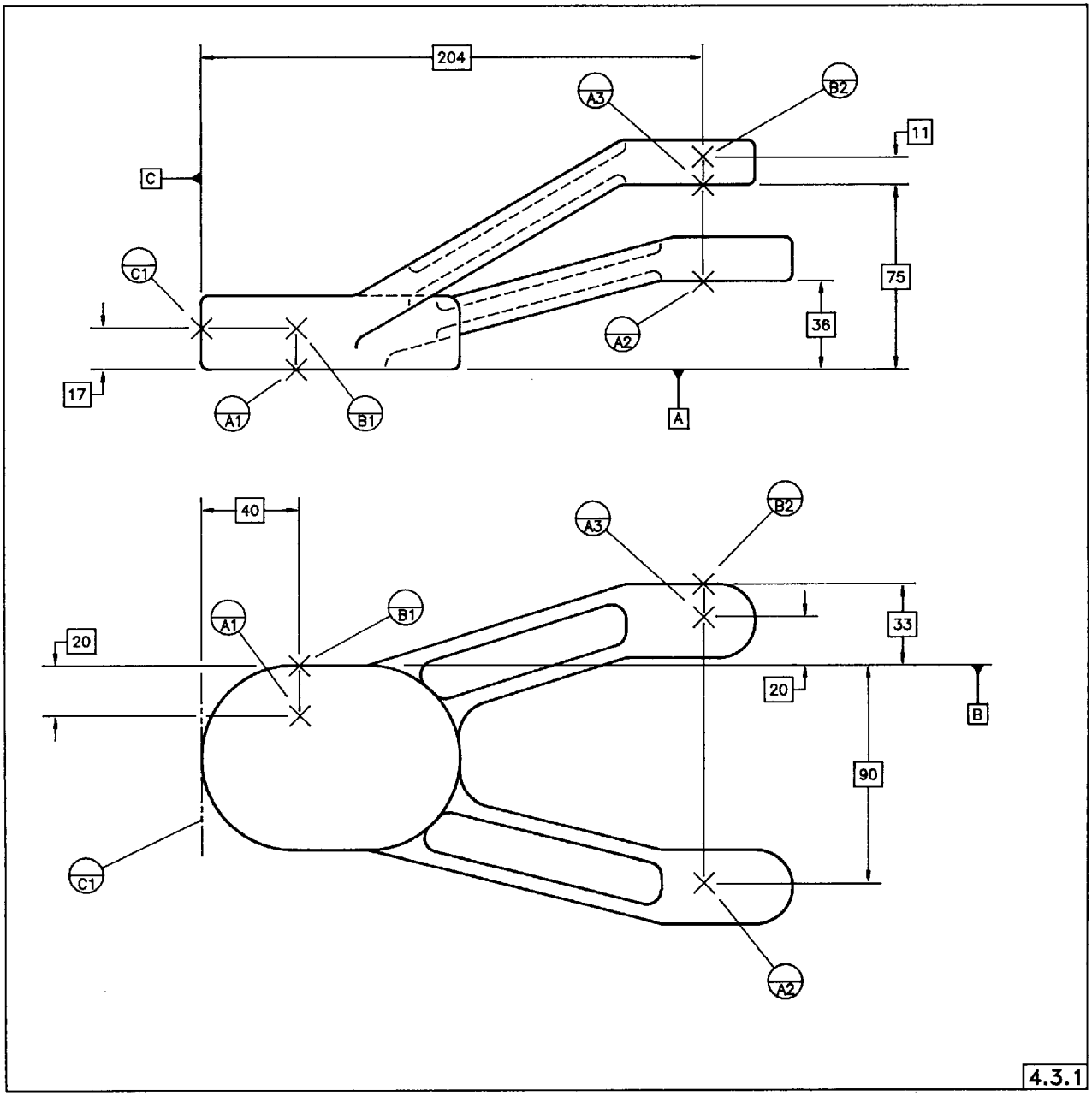

FIG. 4-6 DATUM TARGETS OFFSET FROM THE DATUM PLANE

Copyright ASME International
Provided by IHS under license with ASME
No reproduction or networking permitted without license from IHS Not for Resale

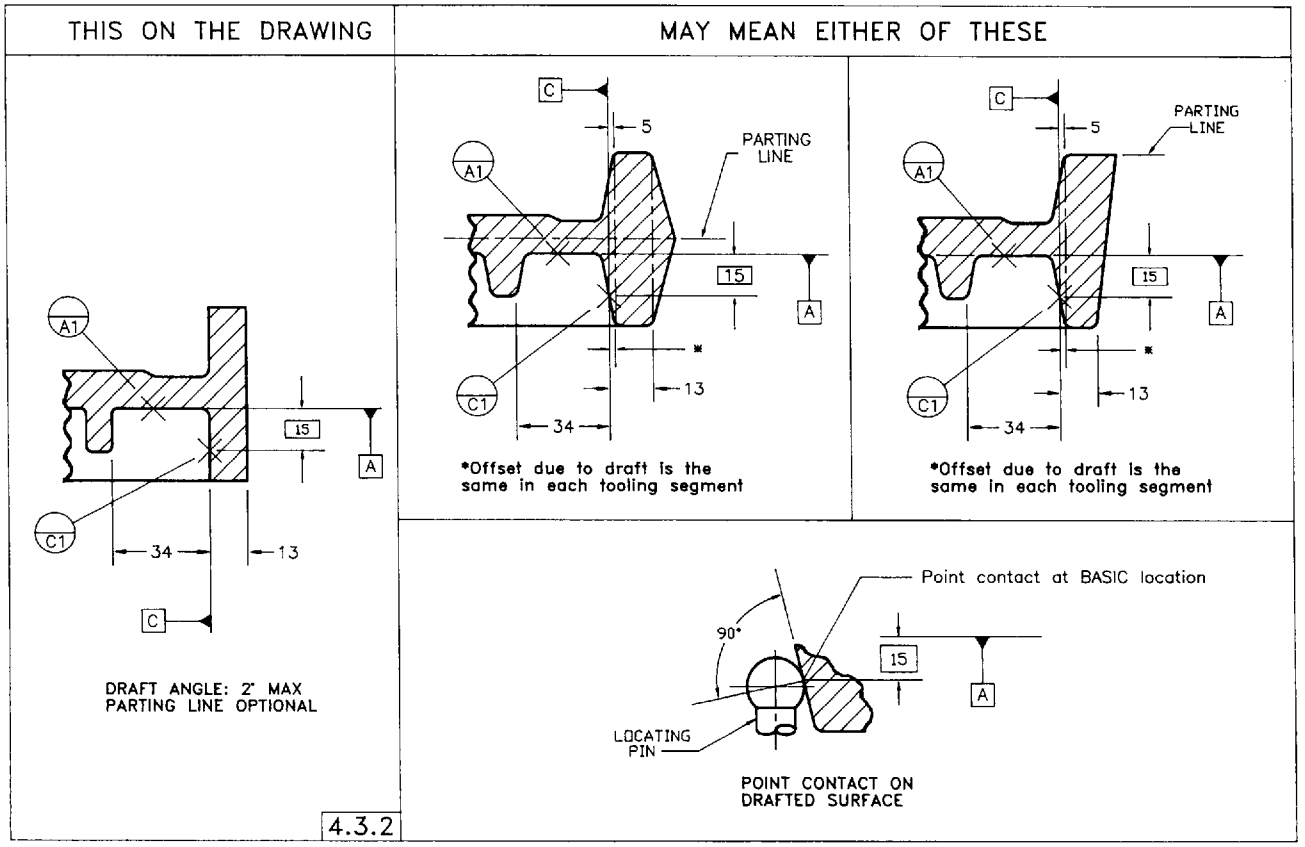

FIG. 4-7 EFFECT OF DRAFT AND PARTING LINE ON DATUMS

Copyright ASME International
Provided by IHS under license with ASME
No reproduction or networking permitted without license from IHS
Not for Resale

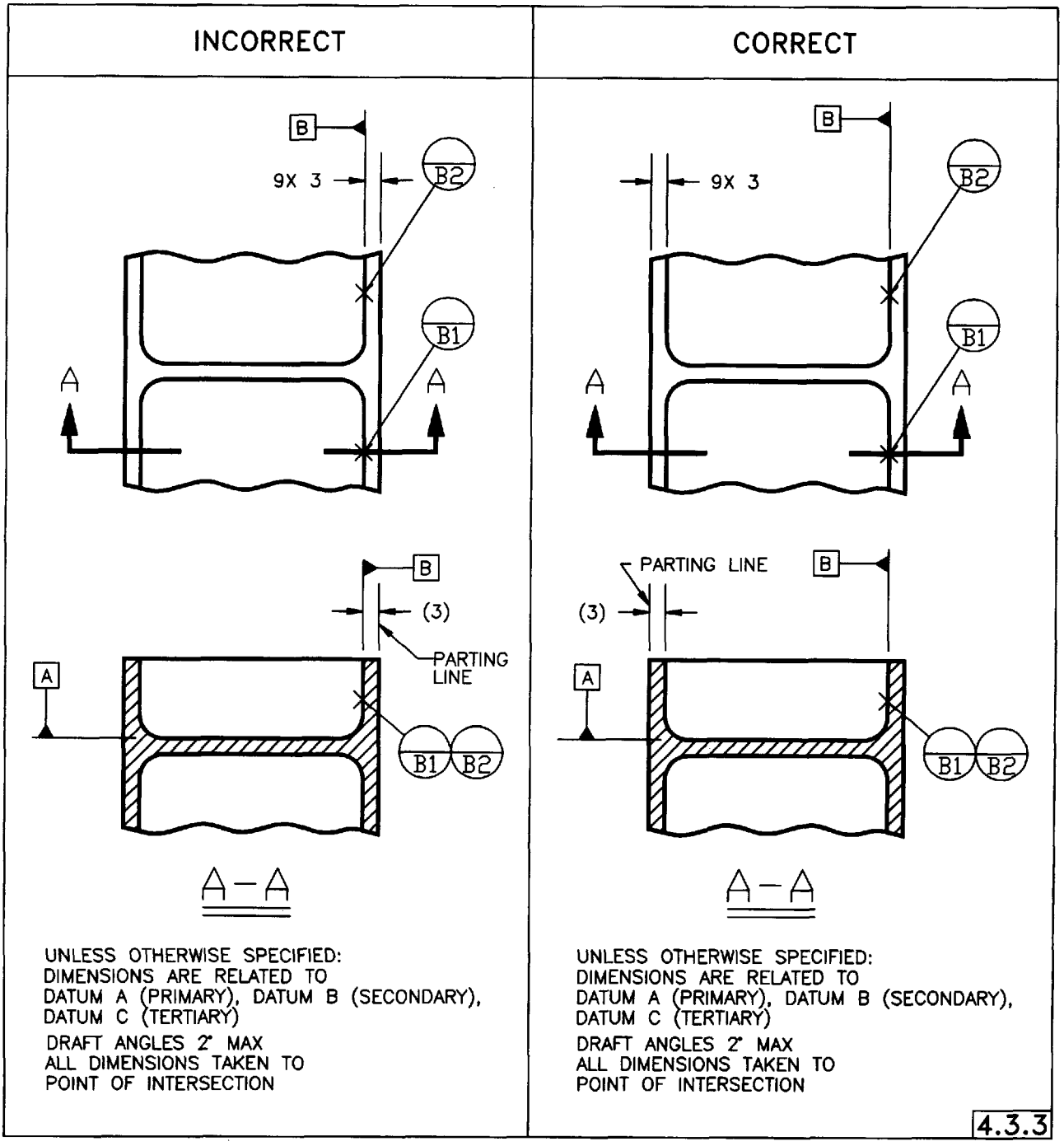

FIG. 4-8 PLACEMENT OF REPETITIVE DIMENSIONS AFFECTED BY DRAFT

Copyright ASME International
Provided by IHS under license with ASME
No reproduction or networking permitted without license from IHS
Not for Resale

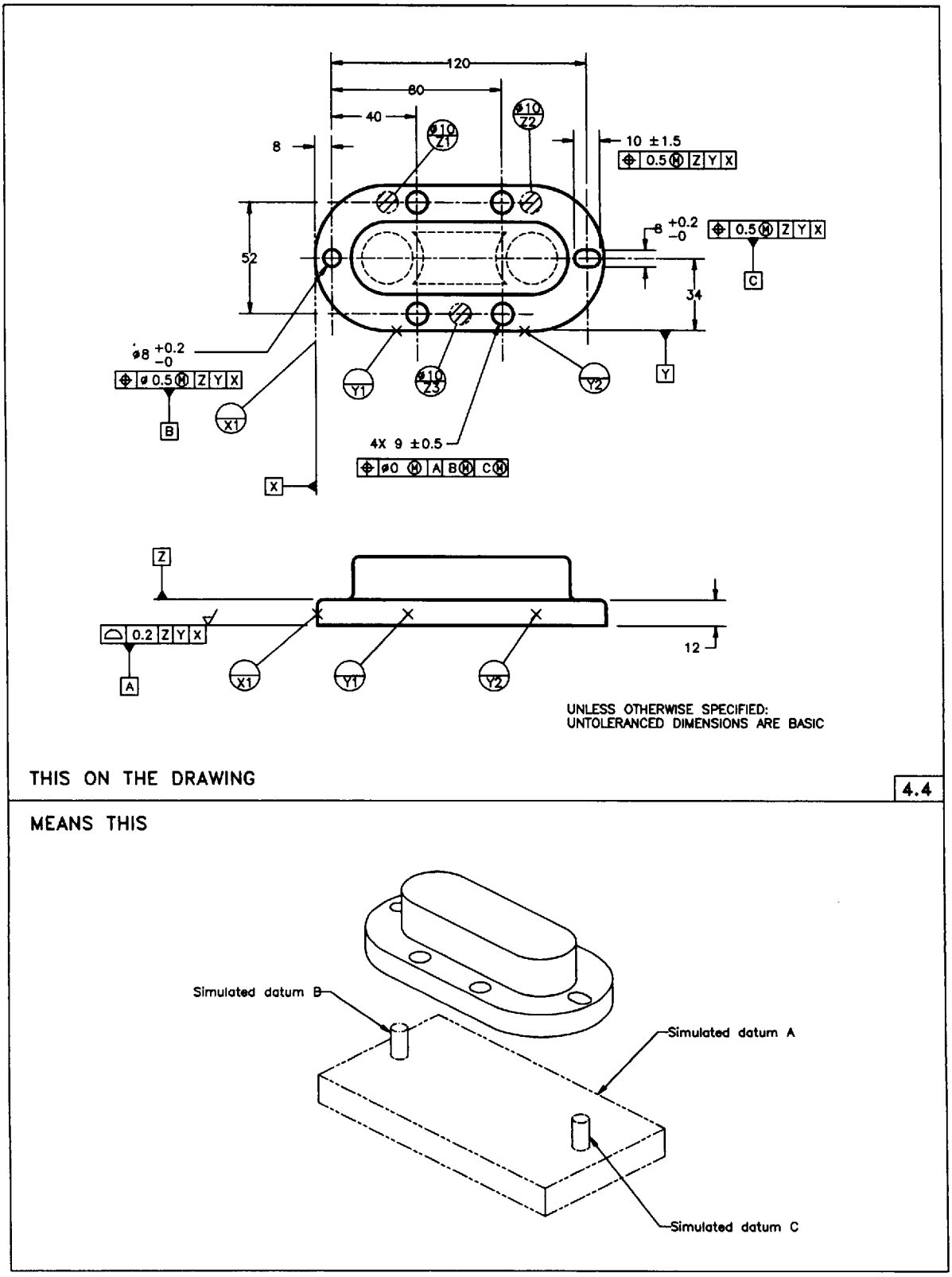

FIG. 4-9 MACHINED DATUM FEATURES LOCATED FROM CAST/FORGED DATUMS

Copyright ASME International
Provided by IHS under license with ASME
No reproduction or networking permitted without license from IHS
Not for Resale

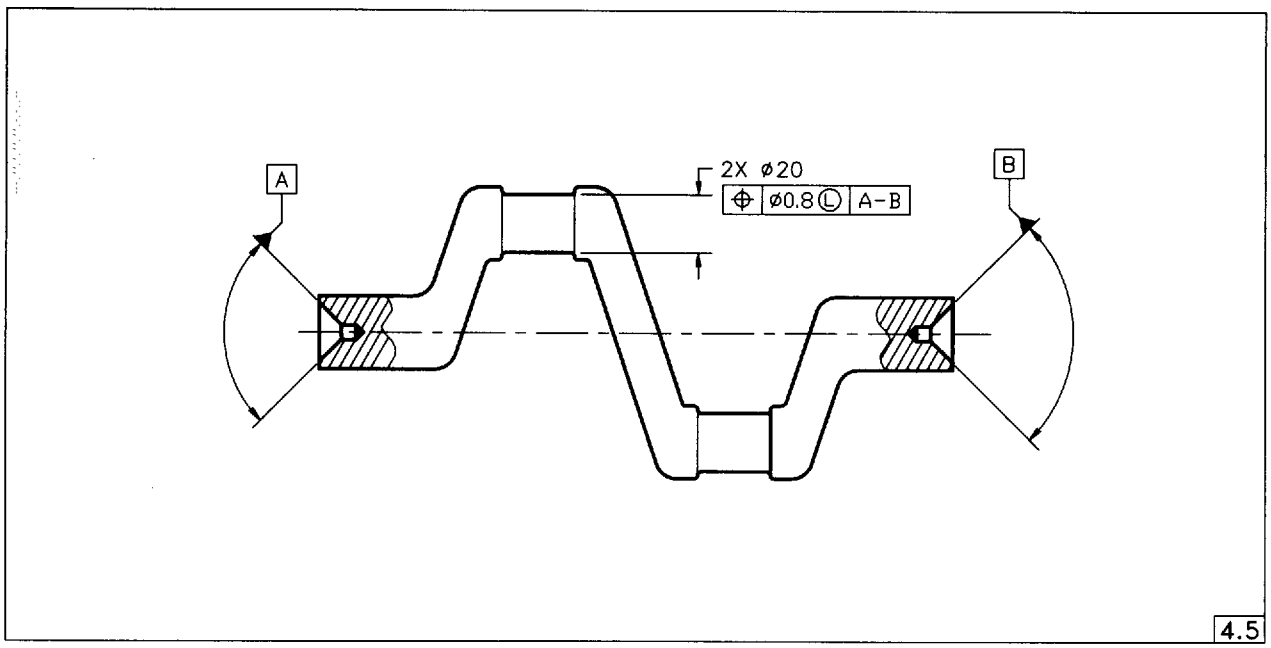

FIG. 4-10 TOOLING CENTERS ESTABLISHING AN AXIS

Copyright ASME International
Provided by IHS under license with ASME
No reproduction or networking permitted without license from IHS
Not for Resale

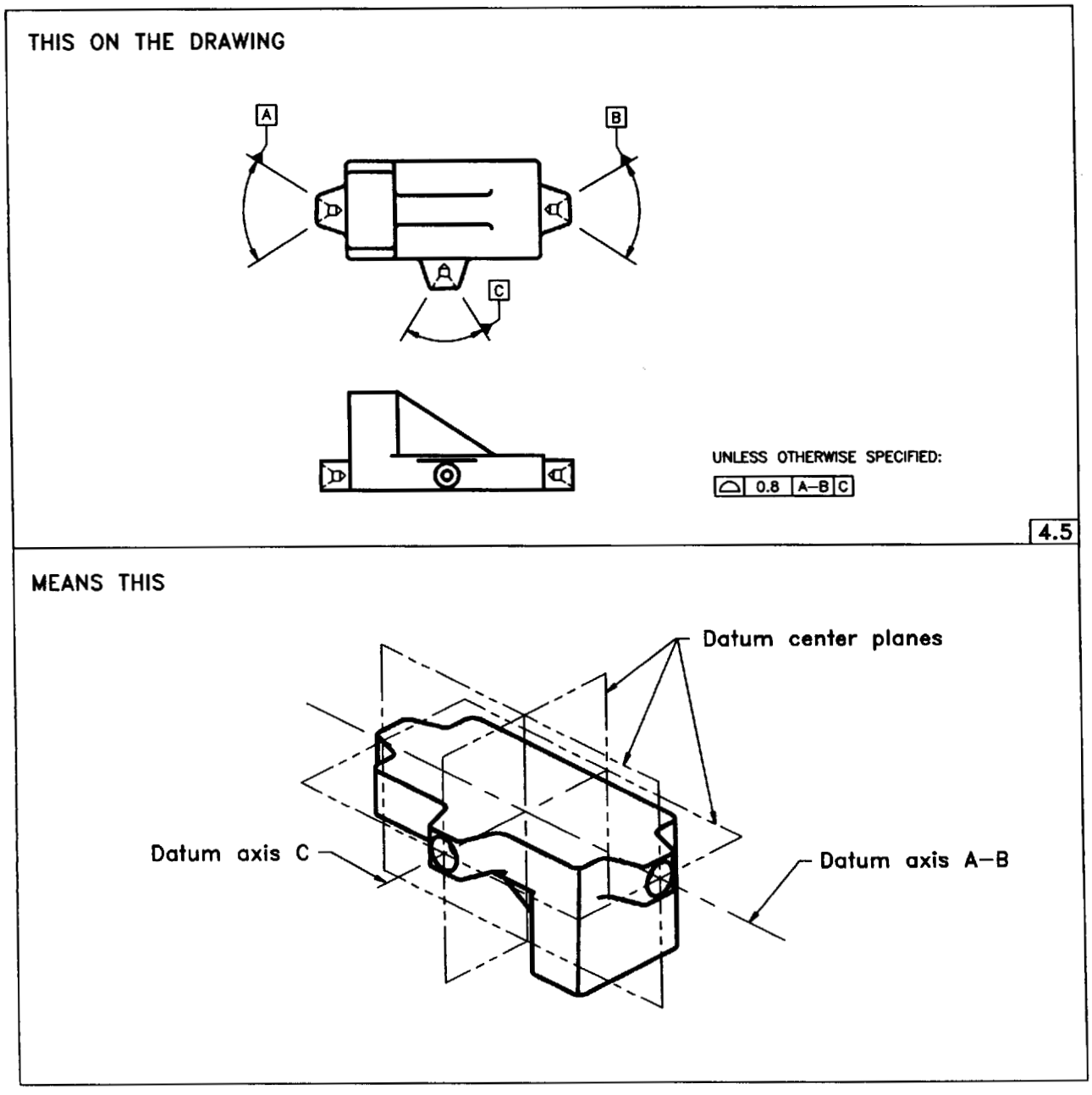

FIG. 4-11 TOOLING CENTERS ESTABLISHING CENTER PLANES

Copyright ASME International
Provided by IHS under license with ASME
No reproduction or networking permitted without license from IHS

Not for Resale

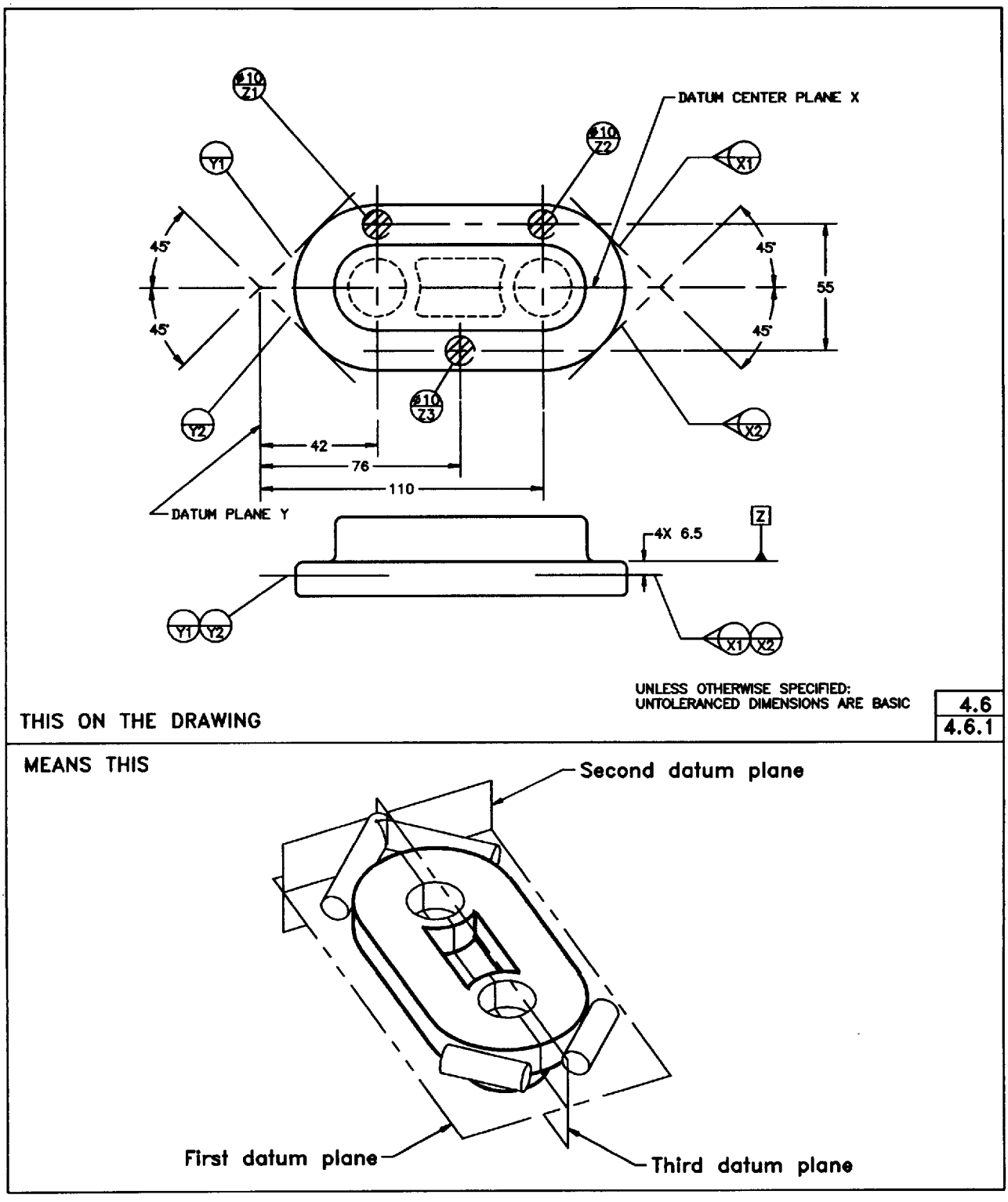

FIG. 4-12 MOVABLE DATUM TARGETS ESTABLISHING A DATUM CENTER PLANE

Copyright ASME International
Provided by IHS under license with ASME
No reproduction or networking permitted without license from IHS
Not for Resale

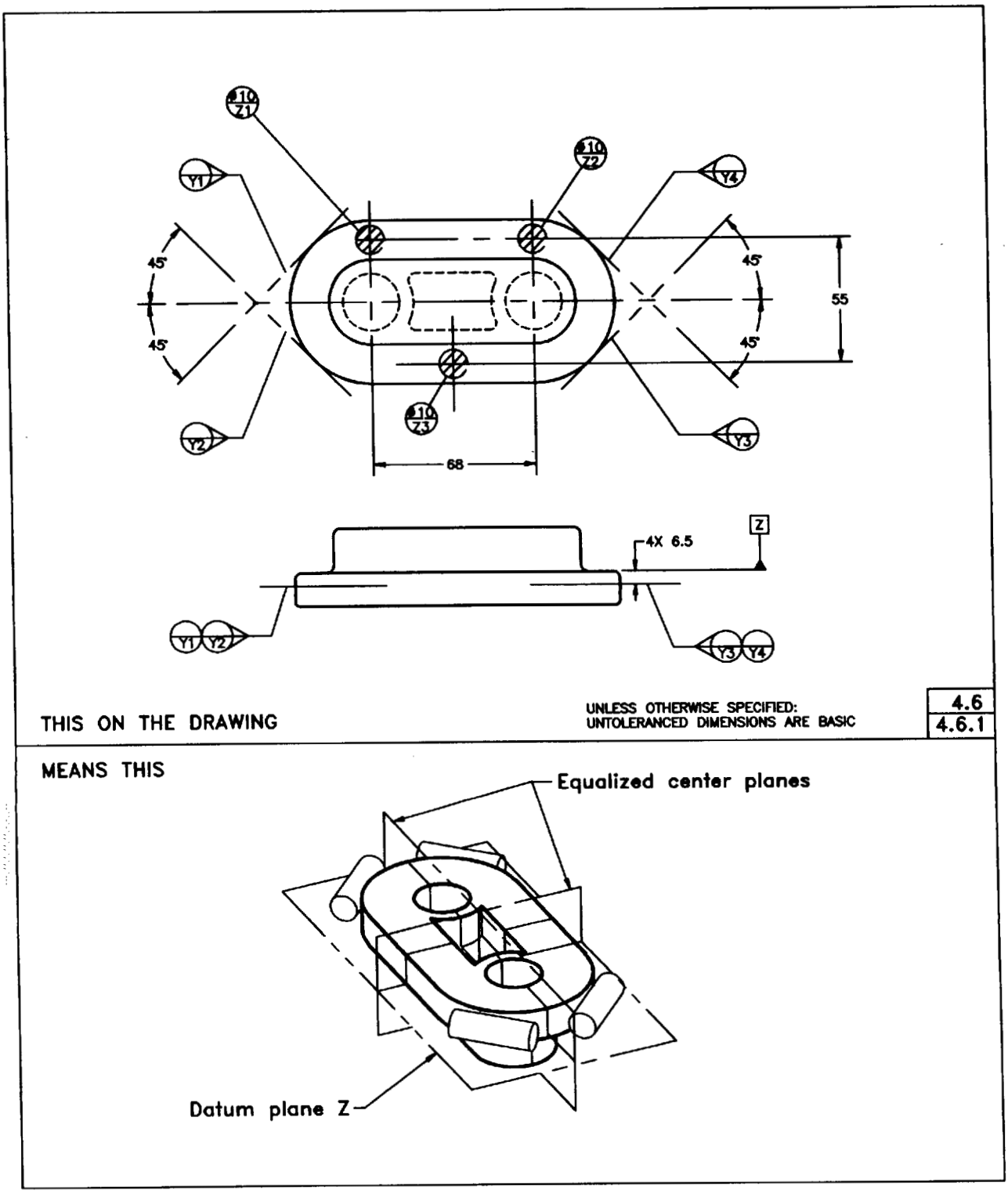

FIG. 4-13 MOVABLE DATUM TARGETS ESTABLISHING TWO DATUM CENTER PLANES

Copyright ASME International
Provided by IHS under license with ASME
No reproduction or networking permitted without license from IHS
Not for Resale

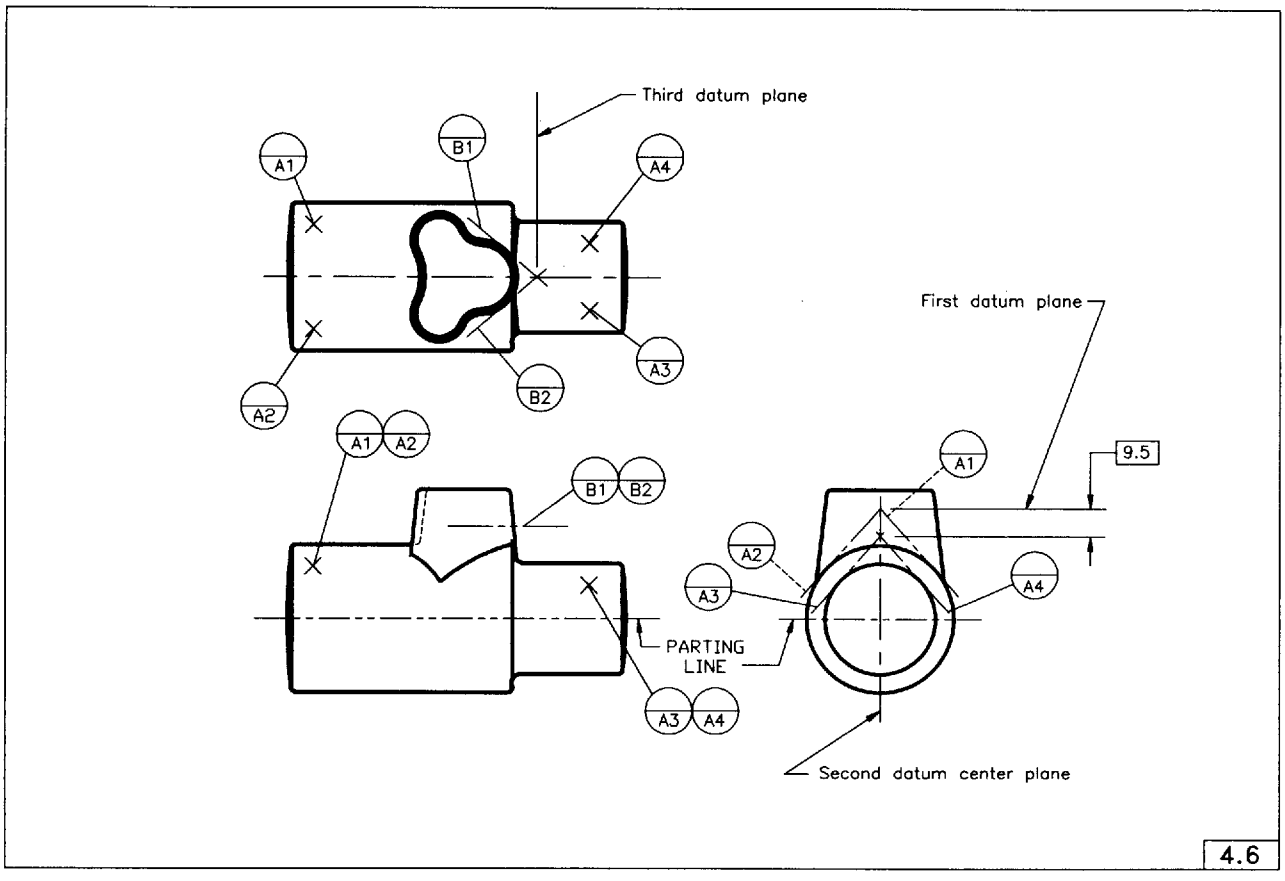

FIG. 4-14 EQUALIZED DATUMS ESTABLISHED BY FIXED DATUM TARGETS

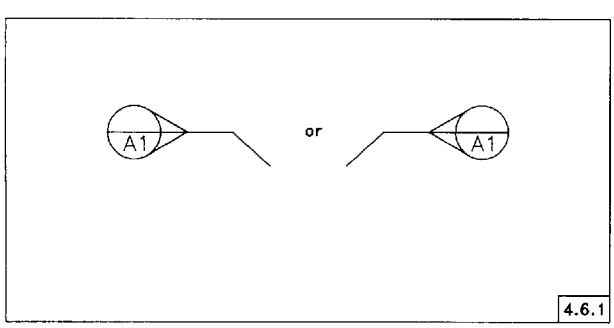

FIG. 4-15(a) MOVABLE DATUM TARGET SYMBOL APPLICATION

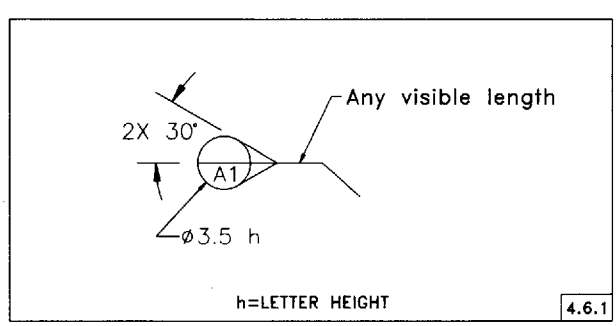

FIG. 4-15(b) MOVABLE DATUM TARGET SYMBOL FORM AND PROPORTION

Copyright ASME International
Provided by IHS under license with ASME
No reproduction or networking permitted without license from IHS
Not for Resale

STD.ASME Y14.8M-ENGL 1996 ■ 0759670 0578581 950 ■

5
Drawing Notes

5.1 General

This Section lists items to be considered for notations on all casting/forging drawings.

5.2 Drawing Note Items

Drawing notes should include the following as applicable:

(a) drafting standard reference
(b) estimated and/or actual part weight
(c) material and process specifications such as:
  (1) chemical composition
  (2) material temper/condition
  (3) thermal processing
  (4) other specifications as applicable
  (5) classification/grade
(d) mechanical and physical properties
(e) destructive/nondestructive testing:
  (1) radiographic examination
  (2) pressure testing
  (3) leak testing
  (4) ultrasonic inspection
  (5) magnetic particle inspection
  (6) penetrant inspection
  (7) hardness testing
  (8) grain flow examination
  (9) metallographic examination
  (10) overheating inspection
  (11) decarburization inspection
  (12) alpha case inspection
  (13) separately cast/forged coupon testing
  (14) cast/forged coupon location
(f) surface texture requirements
(g) cleaning requirements
(h) surface protrusion removal requirements such as:
  (1) fins
  (2) flash
  (3) gates
  (4) risers
  (5) knockout bosses
  (6) vents, bosses
(i) allowances for scale pit dressouts
(j) general feature notes such as:
  (1) wall thickness
  (2) corner radii
  (3) fillet radii
  (4) requirements of surface intersections shown as sharp corners
  (5) draft allowances
  (6) tolerances
  (7) die closure allowance
(k) marking requirements
(l) in-process weld requirements
(m) surface treatment requirements
(n) grain direction requirements
(o) packaging requirements
(p) permissible machining areas
(q) permissible chemical milling areas
(r) impregnation requirements
(s) preproduction approval requirements
(t) special dimensional inspection requirements

Copyright ASME International
Provided by IHS under license with ASME
No reproduction or networking permitted without license from IHS
Not for Resale

APPENDIX A
GLOSSARY

(This Appendix is not a part of ASME Y14.8M-1996 and is included for information purposes only.)

A1 GENERAL

This Appendix explains the meaning of some commonly used casting/forging terms.

A2 CASTING TERMS

blind riser: a riser which does not extend through the top of the mold

book mold: a split mold hinged like a book

boss: a short protrusion from a surface of a casting often cylindrically shaped and generally used as an attachment location to other parts or structure

casting

(a) an object at or near finished shape obtained by solidification of a substance in a mold

(b) pouring molten metal into a mold to produce an object of desired shape

centrifugal casting: a casting made by pouring metal into a mold that is rotating or revolved

cheek: the intermediate section of a flask that is used between the cope and drag when molding a shape requiring more than one parting plane

chill: a metal insert imbedded in the surface of a mold to increase the cooling rate at that point

cold chamber machine: a die casting machine where the metal chamber and plunger are not immersed in molten metal

cold shut: an imperfect junction between two flows of metal in a mold

continuous casting: a casting technique in which an ingot, tube, or other shape is continuously solidified while it is being poured, so that its length is not determined by mold dimensions

cope: the upper or topmost section of a flask, mold, or pattern

core: a formed material inserted in a mold to shape the interior or another part of a casting which cannot be shaped by the pattern

die casting: a casting process where molten metal is forced under pressure into the cavity of a metal mold

draft: the taper (angle) applied to selected surfaces to aid in part removal from the mold. Draft normally adds mass.

drag: the bottom section of a flask, mold, or pattern

ejector: a device which is mounted in such a way that it assists in removing a cast part from a die

ejector pin: a device used to push a cast part out of the die

flash: the fin of metal which results from leakage between the mating die or mold surfaces

flask: a metal or wooden frame used for making and holding a sand mold

gate: the portion of the runner in a mold through which molten metal enters the mold cavity

hot chamber machine: a die casting machine in which the metal chamber under pressure is immersed in the molten metal in a furnace

hot isostatic pressing: a method by which a workpiece is processed under simultaneous application of high gas pressure and high temperature to reduce nonsurface-connected internal casting voids (also used for the densification of powder metal parts)

investment (lost wax) casting: a casting produced by pouring metal into a refractory material mold. Refractory material molds are produced using a heat disposable pattern (usually wax).

match (mismatch): a condition in which a feature produced in one mold segment is aligned with the corresponding feature in another mold segment within the specified tolerance

match plate: a metal or wooden plate on which patterns for castings are mounted to facilitate the molding operation

mold: a form made of sand, metal, or other material which contains the cavity into which the molten metal is poured or injected to produce a casting

Copyright ASME International
Provided by IHS under license with ASME
No reproduction or networking permitted without license from IHS
Not for Resale

parting line: a plane on a pattern or a line on a casting corresponding to the separation between the mold pieces

pattern: a form of wood, metal, or other material around which molding material is placed to make a mold

permanent mold: a metal mold that is used repeatedly for the production of castings

plaster molding: a molding system using a mold made of gypsum-bonded aggregate in the form of a water slurry poured over a pattern, hardened, and dried

pressure casting: making castings with pressure on the molten metal

riser: a reservoir of molten metal connected to the casting to provide additional metal to the casting during solidification

runner: the portion of the metal feed system that connects the sprue with the gate

sand casting: a casting produced by pouring metal into a sand mold

straightening: a mechanical process to restore distorted castings to drawing requirements

sprue: the channel that connects the pouring basin with the runner

vent marks: small protrusions on the surface of a casting caused by metal entering the vents (air escape passages) in the mold

weld correction: adding material by welding to restore castings that have surface discontinuities

A3 FORGING TERMS

blocker die: die impression which imparts on the forging an intermediate shape, preparatory to forging of the final shape

boss: a short protrusion from a surface of a forging often cylindrical shaped and generally used as an attachment location to other parts or structure

buster die: die impression used for preliminary forging operations to position material for next operation

coining: a process of applying pressure to a portion or all of a forging surface to obtain closer tolerances or smoother surfaces

conventional forging: a forging characterized by design complexity and tolerances which falls within the broad range of general forging practice

dies: the metal blocks into which forging impressions are machined and from which forgings are produced

draft: the taper (angle) applied to selected surfaces to aid in part removal from the die. Draft normally adds mass.

finisher die: the final forging impression (conventional or precision) which imparts the final shape to the forgings

flash: necessary metal in excess of that required to completely fill the impression of the die. Flash extends out from the body of the forging as a thin fin at the line where the dies meet and is subsequently removed by trimming.

flash extension: portion of flash remaining after trimming. Flash extension is measured from the intersection of the draft and flash at the body of the forging to the trimmed edge.

forging: the process of plastically deforming metal (normally preheated) by impact or compression into a specific shape

forging plane: the plane which includes the principal die face and which is perpendicular to the direction of the ram travel. When parting surfaces of the dies are flat the forging plane coincides with the parting line.

grain flow (flow lines): pattern in a forging resulting from the elongation of nonhomogeneous constituents and the grain structure of the material in the direction of working during forging; usually revealed by polishing and etching sections of forgings

impression die forging: a forging that is formed to the required size and shape in machined three-dimensional impression dies

knock-out pins: a power operated plunger installed in a die to aid in removal of the forging

lap: a surface defect appearing as a seam, caused by the folding over of hot metal and the consequential forging of these into the surface

match (mismatch): a condition in which a feature produced in one die half is aligned with the corresponding feature in the opposite die half within specified tolerances

near net forging: a forging with small draft angles and requiring limited secondary operations such as machining

Copyright ASME International
Provided by IHS under license with ASME
No reproduction or networking permitted without license from IHS
Not for Resale

precision forging: a forging with complexity and tolerances similar to a machined part. Generally only drilling of holes is required.

open die forging: material that is worked between flat or simple contour dies

parting line: the line along the surface of a forging where the dies meet, or the line along the corresponding edge of the die impression

rib: a thin wall or bracing structure on a forged part connecting other structural features and projecting generally in the direction perpendicular to the forging plane

scale pit: a surface depression formed on the forging due to scale remaining in the dies during the forging operation

trimming: the process of removing flash from a forging

upset forging (hot): process for enlarging or reshaping some of the cross-sectional area of a bar, tube, or other product form of uniform section

vent marks: small protrusions on the surface of a forging caused by metal entering the vents (air escape passages) in the die

wall: (see *rib*) a rib or bracing structure on a forged part projecting in the direction perpendicular to the forging plane and generally located along the periphery of the part. The terms rib and wall are often used interchangeably.

web: a thin panel or bracing structure on a forged part connecting bosses, ribs, and other structural features. It is generally orientated parallel to the forging plane.

Copyright ASME International
Provided by IHS under license with ASME
No reproduction or networking permitted without license from IHS
Not for Resale

APPENDIX B
SAMPLE NOTES

(This Appendix is not a part of ASME Y14.8M-1996 and is included for information purposes only.)

B1 GENERAL

The purpose of this Appendix is to present notes as applicable on casting/forging drawings.

B2 SAMPLE CASTING NOTES

(a) General Notes Unless Otherwise Specified

(1) DRAWING PREPARED IN ACCORDANCE WITH ASME Y14.8M-1996

(2) GATE, RISER, VENT, PARTING LINE, AND EJECTOR PIN LOCATIONS SHALL BE APPROVED BY PROCURING ACTIVITY BEFORE TOOL CONSTRUCTION

(3) DIMENSIONS AND TOLERANCES EXCLUDE DRAFT. DRAFT ADDS MASS.

(4) DRAFT ANGLES:
VALUES INDICATED ARE FOR INSIDE WALLS. DRAFT FOR OUTSIDE WALLS IS ONE-HALF VALUE SHOWN. VALUES ARE MAXIMUM.

Depth of Wall	Degrees per Side
0–XX	X°
XX–XX	X°
XX–XX	X°

(5) DRAWING TOLERANCES INCLUDE INDUSTRY PROCESS ALLOWANCES

(6) FILLET RADII XX

(7) CORNER RADII XX

(8) CORNERS SHOWN SHARP TO XX MAXIMUM BREAK

(9) WALL THICKNESS XX

(10) PARTING LINE EDGES, FLASH, GATES, RUNNER, AND RISER EXTENSIONS XX MAXIMUM.

(11) PRESSURE TEST PER XXXX TO XX kPa MAXIMUM

(12) PENETRANT INSPECT PER XXXX

(13) RADIOGRAPHIC INSPECT PER XXXX

(14) SURFACE TEXTURE PER XXXX.

(15) FILLETS SHOWN SHARP XX MAX.

(16) UNTOLERANCED DIMENSIONS ARE BASIC

(17) MATERIAL SPECIFICATION

(b) Local Notes

(1) DRAFT REDUCES MASS

(2) DRAFT WITHIN DIMENSIONAL TOLERANCE

(3) X° MAXIMUM DRAFT

(4) NO DRAFT

(5) NO EJECTOR PIN MARKS THIS SURFACE

(6) FOUNDRY IDENTIFICATION PERMISSIBLE THIS SURFACE

(7) HARDNESS TEST HERE

B3 SAMPLE FORGING NOTES

(a) General Notes Unless Otherwise Specified

(1) DRAWING PREPARED IN ACCORDANCE WITH ASME Y14.8M-1996

(2) DRAFT ANGLES X° MATCH WHERE REQUIRED

(3) CORNER RADII X.0 ± 0.X

(4) FILLET RADII X.0 ± 0.X

(5) GRAIN DIRECTION SHALL CONFORM TO THE GENERAL SHAPE OF THE PART

(6) DIMENSIONAL TOLERANCE ± 0.X

(7) DIE CLOSURE TOLERANCE ± 0.X

(8) MISMATCH TOLERANCE ± 0.X

(9) FLASH EXTENSION TOLERANCE 0.X

(10) UNTOLERANCED DIMENSIONS ARE BASIC

(11) ALLOY AND TEMPER XXXX PER XXXX

(12) MATERIAL SPECIFICATION PER XXXX

(13) MACHINED SURFACES PERMISSIBLE WHERE SHOWN

(14) MARKING PER XXXX

(15) PENETRANT INSPECT PER XXXX

(16) ULTRASONIC INSPECT PER XXXX

(17) SURFACE TEXTURE XX

(18) MAGNETIC PARTICLE INSPECT PER XXXX

(19) EDGE RADII X.0 ± 0.X

(b) Local Notes

(1) PARTING LINE

(2) FORGING PLANE

Copyright ASME International
Provided by IHS under license with ASME
No reproduction or networking permitted without license from IHS
Not for Resale

(3) PREDOMINANT GRAIN DIRECTION BILLET ONLY

(4) TEST SPECIMEN LOCATIONS

(5) MACHINED SURFACE PERMISSIBLE

(6) DRAFT NOT PERMITTED

(7) PART NUMBER, SIZE, STYLE, AND LOCATION

(8) VENDOR TRADE MARK, LOT NUMBER, AND INSPECTION STAMPING LOCATIONS

Copyright ASME International
Provided by IHS under license with ASME
No reproduction or networking permitted without license from IHS
Not for Resale

APPENDIX C
PROFILE TOLERANCE SYSTEM FOR DIMENSIONING AND TOLERANCING CASTING/FORGING DRAWINGS

(This Appendix is not a part of ASME Y14.8M-1996 and is included for information purposes only.)

C1 GENERAL

The purpose of this Appendix is to present the profile tolerance system for dimensioning and tolerancing casting/forging drawings. This system should assist the design engineer, tool designer, tool maker, machinist, pattern maker, and parts inspector in obtaining uniform results. Additionally, it should optimize performance of automated machining and inspection centers.

C2 PROFILE TOLERANCE SYSTEM

The profile tolerance system uses datum reference frames, basic dimensions, geometric profile of a surface tolerances and machine allowances to define and control cast/forged surfaces. Datum reference frames are established from datum targets on as-cast/-forged surfaces to control the rough casting/forging and from machined datum features to control the finished part. Basic dimensions are used to define size, shape, location, and geometric relationship between surfaces, features and datum reference frames. Profile of a surface tolerances control cast/forged surface size and location relative to the specified datum reference frame and basic dimensions. Machine allowance permits determination of the rough casting/forging dimensions from the machined surfaces of the finished part. The profile tolerance system may be applied to separate view drawings, combined view drawings, and end item drawings.

The use of profile of a surface tolerance requires that the profile tolerance value for each surface include additive tolerances such as die closure, mismatch, flash extension, and straightness where applicable.

C3 FIGURES

The Figures in this Appendix are intended only as illustrations to aid in understanding the principles of the profile tolerance system for dimensioning casting/forging drawings described in the text. The Figures are incomplete by intent in that no material or notes related to casting/forging processes are shown.

C4 DRAFTING PRACTICE

The following drafting practices are applicable to combined view drawings for illustrating both the casting/forging requirements and the machining requirements on a single set of views using the profile tolerancing method.

(a) Draw the shape of the finished part without consideration of draft or parting. Dimension the shape using basic dimensions and geometric profile of a surface tolerances.

(b) Show draft pictorially only on cast/forged surfaces that remain on the finished part when external draft exceeds 2 deg. and internal draft exceeds 3 deg. (the draft angle is a basic dimension that applies to define basic profile wherever draft exists on the finished part whether or not draft is shown pictorially on the drawing).

(c) Show casting/forging outline for machined surfaces (with phantom lines) only when necessary to clarify the parting line and machine allowance.

(d) Establish the functional datum reference system in accordance with ASME Y14.5M using functional features of the finished part.

(e) Dimension shape, size, and location of features with respect to the datum reference system, using rectangular coordinate dimensioning practices with basic dimensions in accordance with ASME Y14.5M. Apply tolerances using geometric profile of a surface tolerances.

(f) Dimension the basic profile of unmachined surfaces that remain on the finished part with respect to the function datums. Dimensions for fillets, corners, draft, and wall thickness which remain on the finished part must be shown either in the general notes or on the body of the drawing.

(g) Dimension the machined surfaces of the finished part with respect to the functional datums using basic dimensions and geometric tolerances. Size and shape before machining is depicted by adding machine allowance to the basic dimensions and then applying the profile tolerance.

Copyright ASME International
Provided by IHS under license with ASME
No reproduction or networking permitted without license from IHS
Not for Resale

C4.1 As-Cast/As-Forged Part Profile Requirements

The as-cast/as-forged part profile must be defined in addition to the finished part requirements.

Select datum targets and establish the rough part datum reference system using the as-cast/as-forged surfaces of the part. Relate this datum reference system by dimensions to the functional datum reference system.

C4.2 General Notes

General Notes may be used to show requirements that apply to repeated features as follows.

(a) Machine allowance. Specify basic machine allowance to apply to nondrafted machined surfaces.

(b) Fillet radii. Specify size for cast/forged fillet radii that will remain on the finished part.

(c) Corner radii. Specify size for cast/forged corner radii that will remain on the finished part.

(d) Draft, external. Specify value for standard draft to be used on external surfaces.

(e) Draft, internal. Specify value for standard draft to be used on internal surfaces.

(f) Basic wall thickness. Specify value for basic wall thickness.

(g) Minimum wall thickness. Specify value for minimum wall thickness.

(h) Basic profile tolerance related to rough part datum reference system. Specify the basic profile tolerances for the surfaces of the part before machining

(i) Basic profile tolerance related to functional datum reference system. Specify the basic profile tolerances for the cast/forged surfaces of the part that remain on the finished part after machining.

(j) Datums established by datum targets. Specify applicable datum identification letters.

C4.3 Draft

Draft must be illustrated pictorially on the drawing when an unmachined surface that remains on the completed part has draft that is greater than 2 deg. for external surfaces and 3 deg. for internal surfaces. Figure C-1 illustrates possible location for origin of draft and parting line for a simple part when draft and parting are not specifically controlled.

C4.4 Dimensioning Draft

Where it is necessary to specifically control the amount and/or direction of draft for design purposes, the draft angle and origin of the drafted surface must be dimensioned on the drawing.

C4.5 Basic Profile

Basic profile on a machined surface is established by adding the specified machine allowance value to the dimensions that locate the machined surface. Geometric profile of a surface tolerances are applied to this basic profile.

C4.6 Drawing Callout Method

Machine allowance may be shown on drawings using the following methods.

(a) The machine allowance value and profile tolerance value are the same as the values shown in the casting/forging note as shown in Fig. C-2. This is applicable to machined surfaces without draft.

(b) The machine allowance value and profile tolerance value are both different from the values shown in Fig. C-3. This is applicable to machined surfaces with draft. The machine allowance is large enough to include draft.

(c) The machined surface is only a portion of a drafted surface and does not cross the parting line as shown in Fig. C-4.

(d) The machine allowance for a machined chamfer on a corner adjacent to two machined surfaces is specified as shown in Fig. C-5.

(e) The machine allowance for a machined fillet radius adjacent to two machined surfaces is specified as shown in Fig. C-6.

C5 APPLICATION TO A COMBINED VIEW (CASTING/FORGING AND MACHINING REQUIREMENTS) DRAWING

Figure C-7 illustrates a combined views drawing showing both casting and machining requirements as follows.

(a) The drawing views necessary to define both the as-cast part with machining stock added to surfaces which will be machined and the machined part.

(b) Datum targets on the as-cast surfaces to provide a processing datum reference frame (X, Y, and Z) for qualifying the as-cast part (refer to ASME Y14.5M).

(c) The functional datum reference frame (A, B, and C) (refer to ASME Y14.5M).

(d) Dimensions relating the processing datum reference frame to the functional datum reference frame.

(e) The dimensions of all features (cast and machined) for size, shape, and location relative to the functional datum reference frame (A, B, and C) using rectangular coordinate dimensioning, without dimension

Copyright ASME International
Provided by IHS under license with ASME
No reproduction or networking permitted without license from IHS
Not for Resale

lines and arrowheads and basic dimensions (refer to ASME Y14.5M).

(f) A General Note controlling:

(1) profile of a surface tolerance related to the processing datum reference frame for the as-cast part and related to the functional datum reference frame for the cast portions that remain on the finished part

(2) machine allowance

(3) fillet radii

(4) corner radii

(5) external draft

(6) wall thickness

(g) A General Note identifying all dimensions without tolerances as basic dimensions.

(h) Other profile of a surface tolerances may be added where required by machining stock and draft.

Copyright ASME International
Provided by IHS under license with ASME
No reproduction or networking permitted without license from IHS
Not for Resale

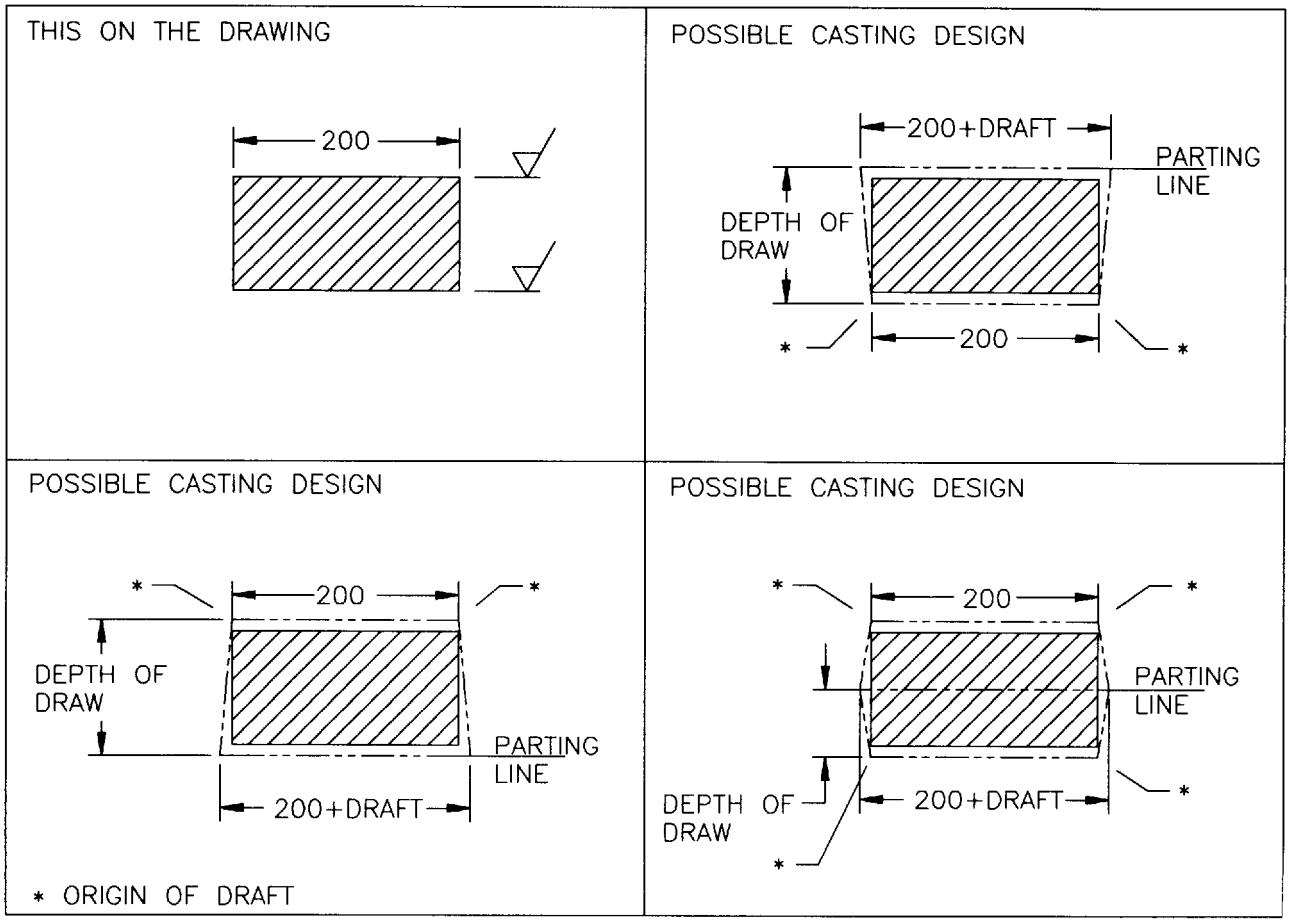

FIG. C-1 ORIGIN OF DRAFT AND PARTING LINE

Copyright ASME International
Provided by IHS under license with ASME
No reproduction or networking permitted without license from IHS
Not for Resale

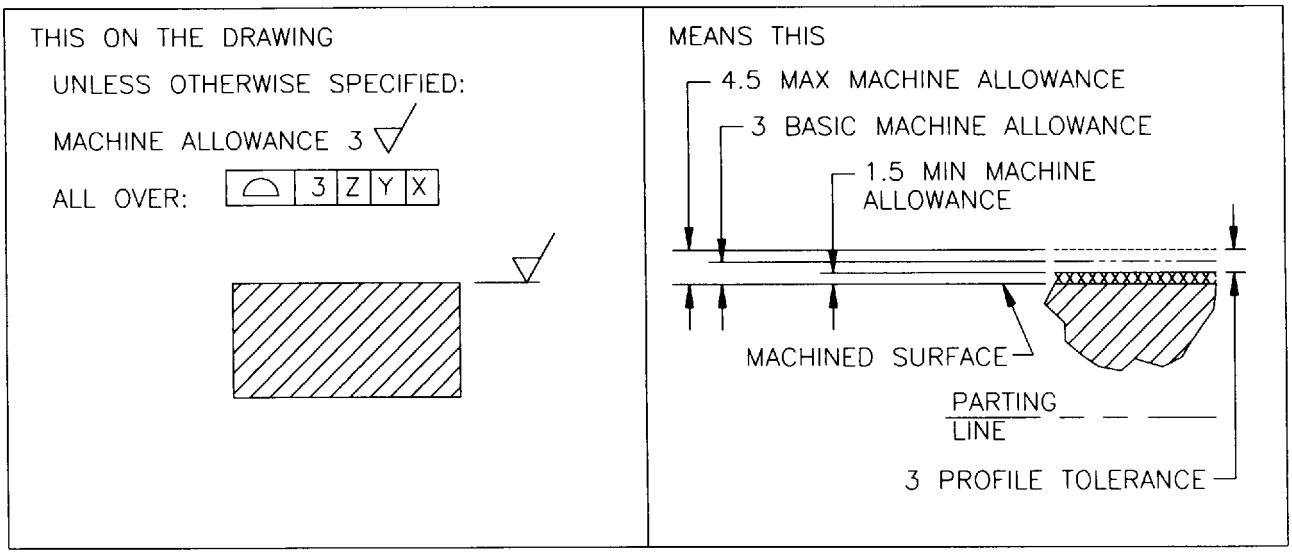

FIG. C-2 MACHINE ALLOWANCE — SURFACE WITHOUT DRAFT

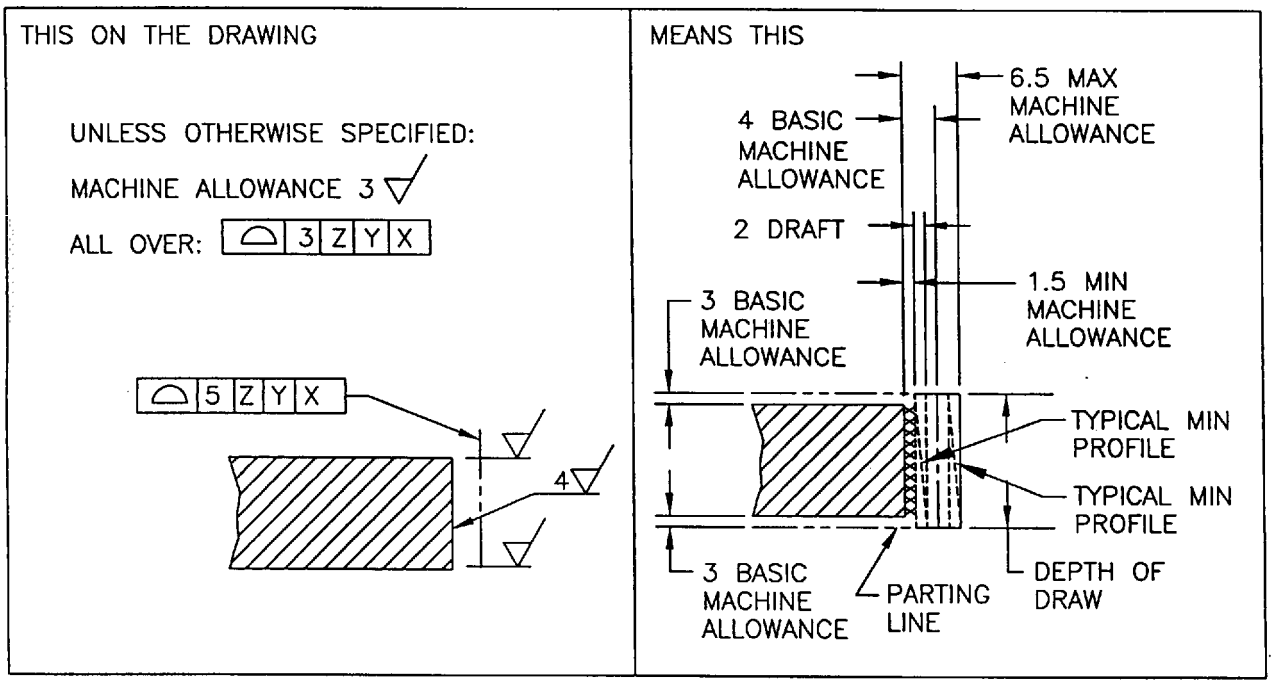

FIG. C-3 MACHINE ALLOWANCE — SURFACE WITH DRAFT

Copyright ASME International
Provided by IHS under license with ASME
No reproduction or networking permitted without license from IHS
Not for Resale

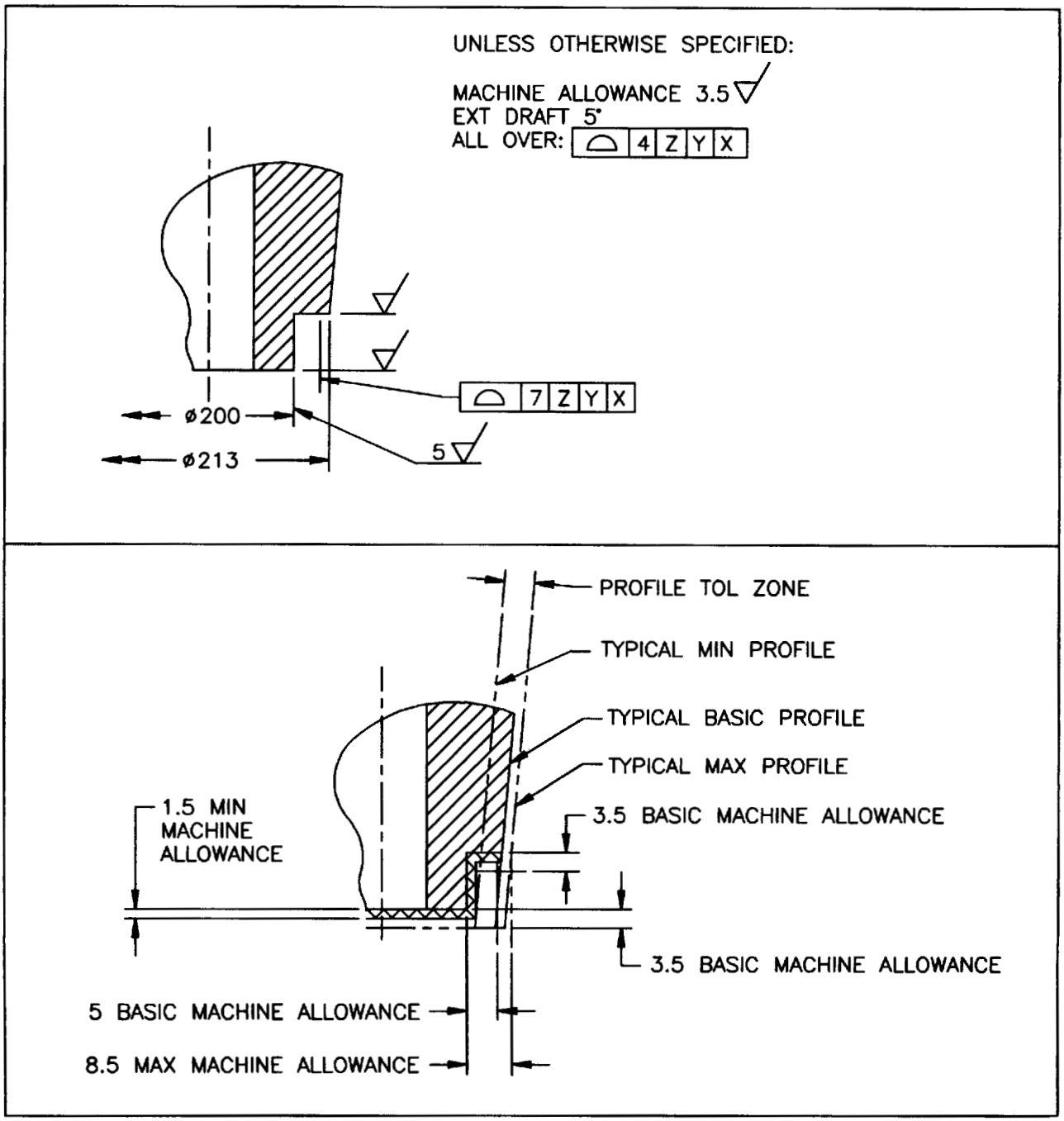

FIG. C-4 MACHINE ALLOWANCE — PORTION OF SURFACE WITH DRAFT

Copyright ASME International
Provided by IHS under license with ASME
No reproduction or networking permitted without license from IHS
Not for Resale

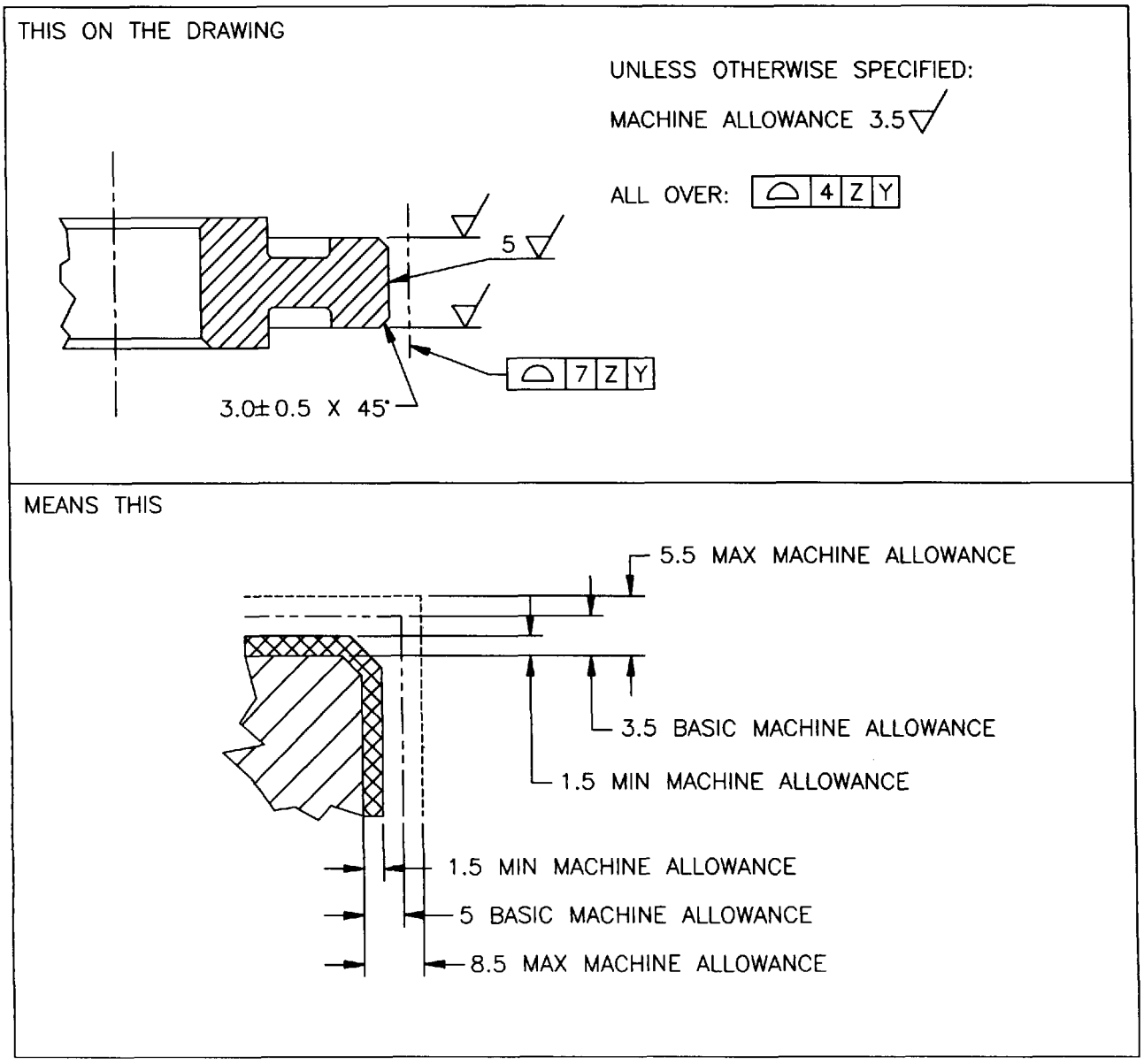

FIG. C-5 MACHINE ALLOWANCE — CHAMFERED CORNER

Copyright ASME International
Provided by IHS under license with ASME
No reproduction or networking permitted without license from IHS
Not for Resale

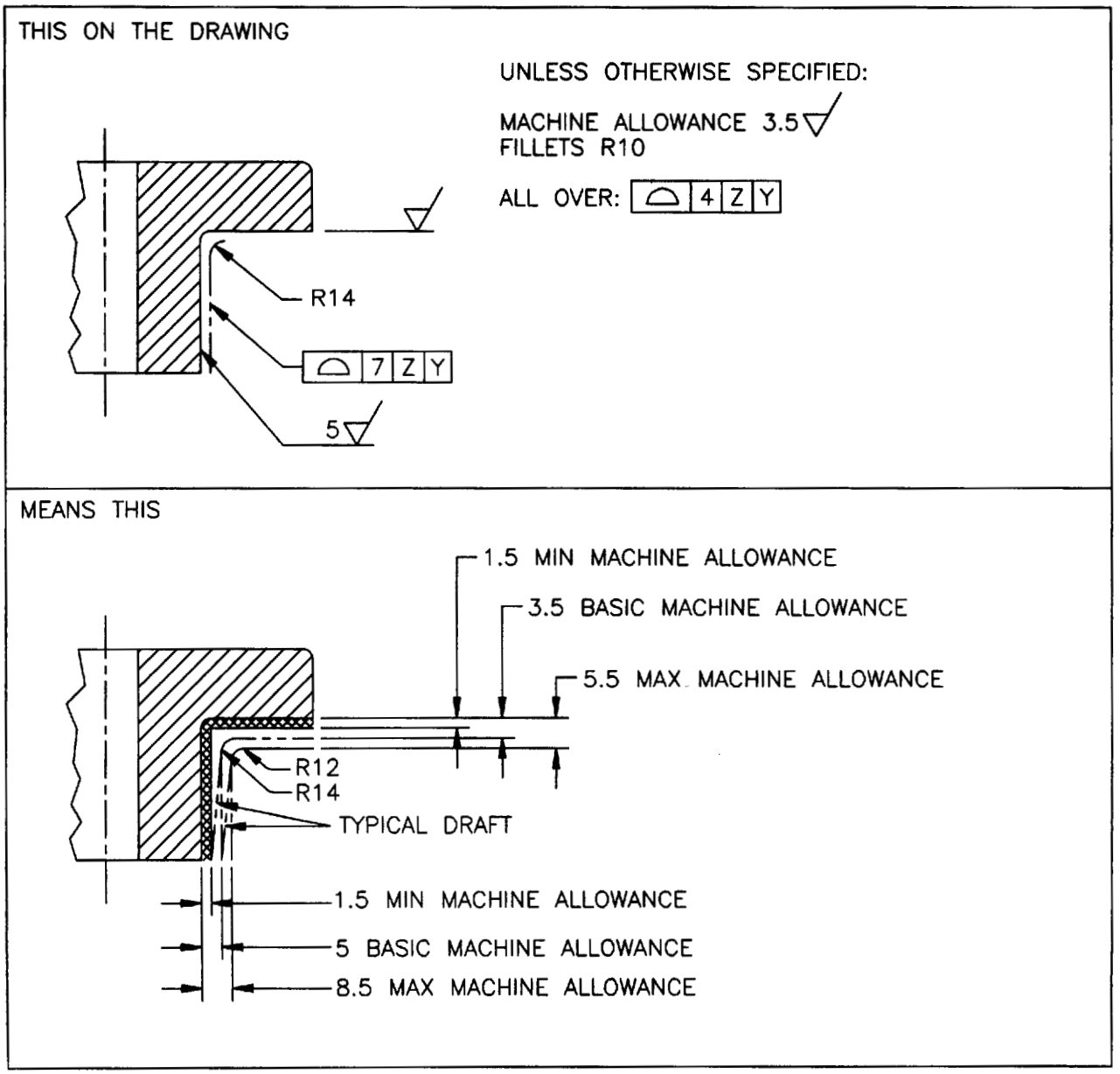

FIG. C-6 MACHINE ALLOWANCE — FILLET

Copyright ASME International
Provided by IHS under license with ASME
No reproduction or networking permitted without license from IHS
Not for Resale

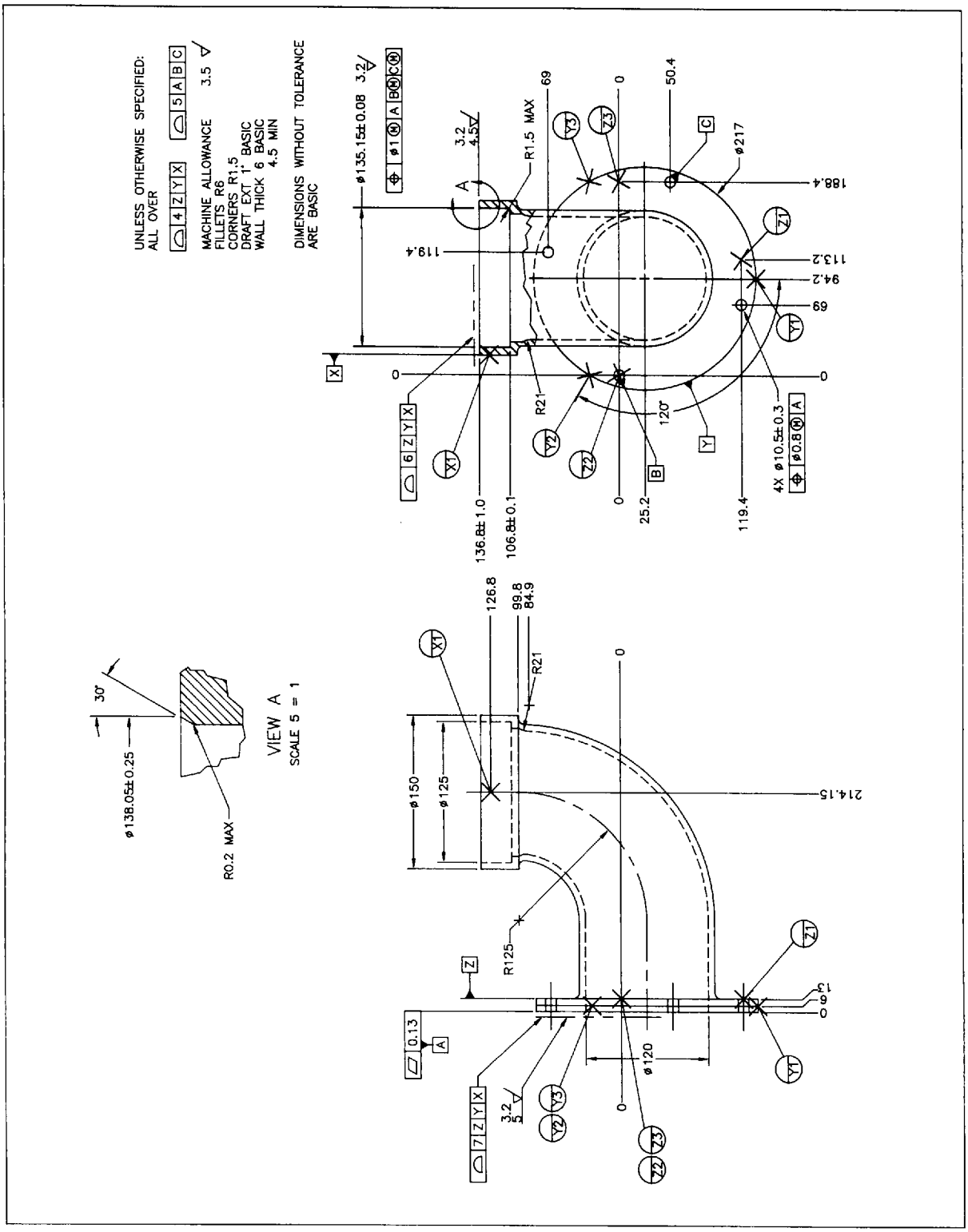

FIG. C-7 COMBINED VIEW (CASTING AND MACHINING REQUIREMENTS) DRAWING

Copyright ASME International
Provided by IHS under license with ASME
No reproduction or networking permitted without license from IHS
Not for Resale

APPENDIX D
SAMPLE DRAWING

(This Appendix is not a part of ASME Y14.8M-1996 and is included for information purposes only.)

Figure D-1 in this Appendix is intended only as an illustration of the principles of dimensioning casting/forging drawings.

The absence of a Figure illustrating the desired application is neither reason to assume inapplicability nor basis for drawing rejection. In some instances the Figure shows added detail for emphasis; in other instances the Figure is incomplete by intent.

Copyright ASME International
Provided by IHS under license with ASME
No reproduction or networking permitted without license from IHS
Not for Resale

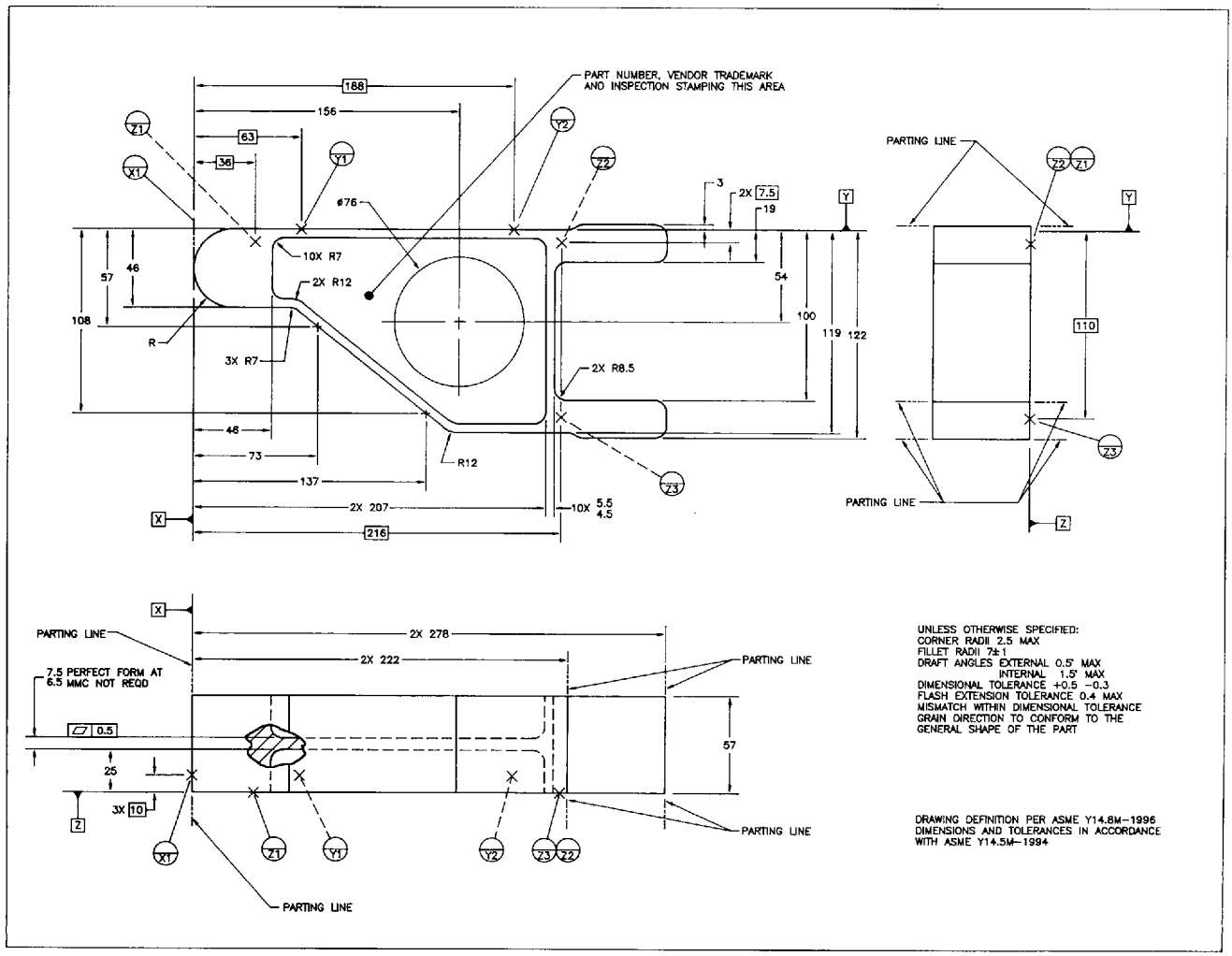

FIG. D-1 PRECISION FORGING DRAWING SAMPLE

Copyright ASME International
Provided by IHS under license with ASME
No reproduction or networking permitted without license from IHS
Not for Resale

RELATED DOCUMENTS

Abbreviations Y1.1-1989
American National Standard Drafting Practices
- Decimal Inch Drawing Sheet Size and Format Y14.1-1995
- Metric Drawing Sheet Size and Format Y14.1M-1995
- Line Conventions and Lettering Y14.2M-1992
- Multiview and Sectional View Drawings Y14.3M-1994
- Pictorial Drawings ..... Y14.4M-1989(R1994)
- Dimensioning and Tolerancing Y14.5M-1994
- Mathematical Definition of Dimensioning and Tolerancing Principles Y14.5.1M-1994
- Certification of Geometric Dimensioning and Tolerancing Professionals Y14.5.2M-1995
- Screw Thread Representation ..... Y14.6-1978(R1993)
- Screw Thread Representation (Metric Supplement) ..... Y14.6aM-1981(R1993)
- Gears and Splines
  - Spur, Helical, Double Helical and Racks ..... Y14.7.1-1971(R1993)
  - Bevel and Hypoid Gears ..... Y14.7.2-1978(R1994)
- Castings and Forgings Y14.8M-1996
- Mechanical Spring Representation ..... Y14.13M-1981(R1992)
- Electrical and Electronics Diagrams ..... Y14.15-1966(R1988)
- Interconnection Diagrams Y14.15a-1971
- Information Sheet Y14.15b-1973
- Fluid Power Diagrams ..... Y14.17-1966(R1987)
- Optical Parts ..... Y14.18M-1986(R1993)
- Types and Applications of Engineering Drawings Y14.24M-1989
- Chassis Frames — Car and Light Truck — Ground Vehicle Practices Y14.32.1M-1994
- Parts Lists, Data Lists, and Index Lists Y14.34M-1989
- Revision of Engineering Drawings and Associated Documents Y14.35M-1992
- Surface Texture Symbols Y14.36M-1996

Digital Representation for Communication of Product Definition Data Y14.26M-1987
A Structural Language Format for Basic Shape Description ..... Y14 Technical Report 4-1989
Illustrations for Publication and Projection ..... Y15.1M-1979(R1986)
Time Series Charts ..... Y15.2M-1979(R1986)
Process Charts ..... Y15.3M-1979(R1986)
Graphic Symbols for:
- Electrical and Electronics Diagrams Y32.2-1975
- Plumbing ..... Y32.4-1977(R1994)
- Railroad Maps and Profiles ..... Y32.7-1972(R1994)
- Fluid Power Diagrams ..... Y32.10-1967(R1994)
- Process Flow Diagrams in Petroleum and Chemical Industries ..... Y32.11-1961(R1993)
- Mechanical and Acoustical Elements as Used in Schematic Diagrams ..... Y32.18-1972(R1993)
- Pipe Fittings, Valves, and Piping ..... Y32.2.3-1949(R1994)
- Heating, Ventilating, and Air Conditioning ..... Y32.2.4-1949(R1993)
- Heat Power Apparatus ..... Y32.2.6-1950(R1993)

Letter Symbols for:
- Glossary of Terms Concerning Letter Symbols ..... Y10.1-1972(R1988)
- Mechanics and Time-Related Phenomena Y10.3M-1984
- Heat and Thermodynamics ..... Y10.4-1982(R1988)
- Quantities Used in Electrical Science and Electrical Engineering Y10.5-1968
- Acoustics Y10.11-1984
- Chemical Engineering ..... Y10.12-1955(R1988)
- Guide for Selecting Greek Letters Used as Letter Symbols for Engineering Mathematics ..... Y10.17-1961(R1988)
- Illuminating Engineering ..... Y10.18-1967(R1987)

The ASME Publications Catalog shows a complete list of all the Standards published by the Society. For a complimentary catalog, or the latest information about our publications, call 1-800-THE-ASME (1-800-843-2763).

Copyright ASME International
Provided by IHS under license with ASME
No reproduction or networking permitted without license from IHS
Not for Resale