K-23-13

K-23-15

ANSI Y14.7.1-1971
2 February 1971

ACCEPTANCE NOTICE

The above Industry Standardization Document was adopted on 2 February 1971 and is approved for use by the DoD. The indicated industry groups have furnished the clearances required by existing regulations. Copies of the document are stocked by DoD Single Stock Point, U.S. Naval Publications and Forms Center, Philadelphia, Pennsylvania, for issue to DoD activities only.

Title of Document: Gear Drawing Standards Part 1 for Spur, Helical, Double Helical and Rack

Date of Specific Issue Adopted: 2 February 1971

Releasing Industry Group: American National Standards Institute

Custodians
Army – MU
Navy – AS
Air Force – 26

Military Coordinating Activity:
Army – MU

Project Number: DRPR-0142

Review Activity:
Army – AV, AT, EL, ME, MI, WC, MU
Navy – MC, OS, SH, YD, AS
Air Force – 26, 11
Other – NSA, DSA

User Activity:
Navy – CG

THIS DOCUMENT CONTAINS 1 PAGES.

Copyright ASME International
Provided by IHS under license with ASME
No reproduction or networking permitted without license from IHS
Not for Resale

K-23-11
K-23-13
K-23-15
K-23-19

AMERICAN NATIONAL STANDARD

DRAFTING PRACTICES

Gear Drawing Standards - Part 1 for Spur, Helical, Double Helical and Rack

ANSI Y14.7.1 - 1971
(PARTIAL REVISION OF Y14.7 – 1958)

SECRETARIATS

AMERICAN SOCIETY FOR ENGINEERING EDUCATION
THE AMERICAN SOCIETY OF MECHANICAL ENGINEERS
SOCIETY OF AUTOMOTIVE ENGINEERS, INC.

PUBLISHED BY

THE AMERICAN SOCIETY OF MECHANICAL ENGINEERS

United Engineering Center 345 East 47th Street New York, N. Y. 10017

Copyright ASME International
Provided by IHS under license with ASME
No reproduction or networking permitted without license from IHS

Not for Resale

Any part of this standard may be quoted. Credit lines should read: "Extracted from American National Standard Drafting Practices, Gear Drawing Standards – Part 1, for Spur, Helical, Double-Helical, and Rack (ANSI Y14.7.1-1971), with the permission of the publisher, The American Society of Mechanical Engineers, United Engineering Center, 345 East 47th Street, New York, N.Y. 10017."

Copyright ©, 1972, by
THE AMERICAN SOCIETY OF MECHANICAL ENGINEERS
Printed in U.S.A.

Copyright ASME International
Provided by IHS under license with ASME
No reproduction or networking permitted without license from IHS
Not for Resale

ACCEPTANCE NOTICE

The above Industry Standardization Document was adopted on 2 February 1971 and is approved for use by the DoD. The indicated industry groups have furnished the clearances required by existing regulations. Copies of the document are stocked by DoD Single Stock Point, U.S. Naval Publications and Forms Center, Philadelphia, Pennsylvania, for issue to DoD activities only.

Title of Document: Gear Drawing Standards Part 1 for Spur, Helical, Double Helical and Rack

Date of Specific Issue Adopted: 2 February 1971

Releasing Industry Group: American National Standards Institute

Custodians
Army – MU
Navy – AS
Air Force – 26

Military Coordinating Activity:
Army – MU

Project Number: DRPR-0142

Review Activity:
Army – AV, AT, EL, ME, MI, WC, MU
Navy – MC, OS, SH, YD, AS
Air Force – 26, 11
Other – NSA, DSA

User Activity:
Navy – CG

Copyright ASME International
Provided by IHS under license with ASME
No reproduction or networking permitted without license from IHS
Not for Resale

FOREWORD

For many years there was a growing desire for a national standard for engineering drawings, and as far back as December 1914 the ASME approved and published the report of its Committee on Standards for Cross-Sections.

The subject of standard practice was laid before the ASME Standardization Committee in April 1925 and in May the ASME Council voted to approve the recommendation of the Committee that the American Standards Association be requested to authorize the organization of a nationally representative committee under its procedure to develop standards for drawings and drafting room practice. This recommendation was considered favorably and a preliminary conference was called by the ASA for October 14, 1925, and a general conference for December 4, 1925.

At the meeting of the ASA Standards Council, December 1925, the project was finally approved, its scope was outlined, and the Society for the Promotion of Engineering Education and the American Society of Mechanical Engineers were designated as joint sponsors. The organization meeting of the sectional committee was held September 24, 1926, at which Dean Franklin deR. Furman was elected chairman. Subsequently six subcommittees were appointed. These subcommittees undertook the formulation of tentative drafts of the several sections of the final report which were distributed for criticism and comment.

In the spring of 1931 an Editing Committee, Dr. Thomas E. French, Chairman, combined and harmonized the final reports of the several subcommittees. The proposed standard was approved by the sectional committee and was subsequently approved by the sponsor societies and transmitted to the American Standards Association for approval and designation as an American Standard, a status which was granted in May, 1935.

The sectional committee authorized the revision of the American Standard in December, 1940, and the Subcommittee on Revision was appointed in September, 1941. A draft dated August, 1944 received the approval of the sectional committee. The proposal was subsequently submitted to the sponsors and to the American Standards Association for their approval. This approval with designation as an American Standard was received on April 12, 1946.

In 1948, the scope of the project was enlarged, and a revision was begun in view of the increased drafting standardization work in Great Britain and Canada. An Executive Committee was formed in 1949 to supervise the work. It was decided to publish the eventual revision in separate sections. Upon completion and sectional committee approval of the last of the first six sections, they were sent to sponsors and to ASA for approval. Succeeding sections, as approved by the sectional committee were subsequently submitted to sponsors and ASA.

A section, Gears, Splines and Serrations, Y14.7, was approved and published as an American Standard on April 8, 1958.

Recognizing the need for a universal gear drafting standard, a COR Committee was organized, in December 1961, for the purpose of coordinating the views of the SAE, Y14, the Military and the AGMA on a drafting standard for gears which could provide a fundamental document for wide national use of all interested parties.

During this time the American Standards Association became the United States of America Standards Institute and, as of October 6, 1969, the American National Standards Institute, Inc. In addition, the Society of Automotive Engineers became a cosponsor, along with the ASEE and the ASME of all Y14 Drafting Practices.

It was recommended by the SAE Drawing Standards Committee and concurred in by the members of the COR Committee that this section be divided into two parts with Part 1 covering spur, helical, double-helical, and rack gears. Part 2 would cover matched sets, worms and wormgears and conical type gears. Also, in coordination with the AGMA Nomenclature Committee, Part 2 will contain, as an appendix, some fundamental gear nomenclature and abbreviations.

After eight meetings, the COR Committee was incorporated into Subcommittee 7 of Standards Committee Y14. Many drafts were circulated among the members of AGMA, AOA, SAE, Y14 and the Military for suggestions and criticisms. This section covering Part 1 received the approval of the Y14 Standards Committee and was subsequently approved by the sponsor societies and submitted to the American National Standards Institute. It was designated an American National Standard on November 1, 1971.

Copyright ASME International
Provided by IHS under license with ASME
No reproduction or networking permitted without license from IHS
Not for Resale

AMERICAN NATIONAL STANDARDS COMMITTEE Y14
STANDARDS FOR DRAWING AND DRAFTING PRACTICE

OFFICERS

F. L. Spalding, *Chairman*
R. F. Franciose, *Vice Chairman*
L. V. Porter, *Secretary*

COMMITTEE PERSONNEL

AMERICAN INSTITUTE FOR DESIGN & DRAFTING
F. E. Golightly, Westinghouse Electric Corporation, Youngwood, Pennsylvania

AMERICAN SOCIETY FOR ENGINEERING EDUCATION, THE
R. W. Bokenkamp, University of Illinois, Urbana, Illinois
K. E. Botkin, Purdue University, Lafayette, Indiana
C. H. Kearns, Ohio State University, Columbus, Ohio
W. J. Luzadder, Purdue University, Lafayette, Indiana
H. C. Spencer, Waco, Texas
C. H. Springer, N. Fort Myers, Florida
**C. L. Svensen,* Austin, Texas

AMERICAN SOCIETY OF CIVIL ENGINEERS
F. J. Kircher, Seelye, Stevenson, Value & Knecht, New York, New York

AMERICAN SOCIETY OF HEATING, REFRIGERATING & AIR CONDITIONING ENGINEERS
Fritz Honerkamp, Anemostat Corp. of America, Scranton, Pennsylvania
H. J. Donovan, Alternate, Carrier Corporation, Syracuse, New York
H. P. Tinning, Alternate, American Society of Heating, Refrigerating & Air Conditioning Engineers, New York, New York

AMERICAN SOCIETY OF MECHANICAL ENGINEERS, THE
**N. L. Bean,* Dearborn, Michigan
A. R. Machell, Jr., Xerox Corporation, Rochester, New York
F. L. Spalding, University of Illinois, Urbana, Illinois

ASSOCIATION OF AMERICAN RAILROADS
M. F. McCorcle, St. Louis-San Francisco Railway, Springfield, Missouri

BENDIX CORPORATION, THE (KANSAS CITY DIVISION)
D. R. Lambeth, The Bendix Corporation, Kansas City, Missouri

BRITISH STANDARDS INSTITUTE
L. A. Hydes, Liaison, English Electric Company Limited, Stafford, England

BUSINESS EQUIPMENT MANUFACTURERS ASSOCIATION
W. T. Barton, International Business Machines Corporation, Endicott, New York

CANADIAN STANDARDS ASSOCIATION
Rowland Hill, Liaison, Northern Electric Company Limited, Ottowa, Ontario, Canada

ILLUMINATING ENGINEERING SOCIETY
L. E. Barbrow, National Bureau of Standards, Washington, D.C.
J. E. Kaufman, Alternate, Illuminating Engineering Society, New York, New York

INSTITUTE OF ELECTRICAL & ELECTRONICS ENGINEERS, THE
C. R. Muller, ITT Federal Laboratories, Clifton, New Jersey
G. H. Pearsall, Consolidated Edison Company of New York Incorporated, New York, New York
C. A. Fricke, Alternate, Philco Corporation, Fort Washington, Pennsylvania

**Deceased*

Copyright ASME International
Provided by IHS under license with ASME
No reproduction or networking permitted without license from IHS
Not for Resale

MANUFACTURING CHEMISTS ASSOCIATION, INCORPORATED
J. E. Ross, E.I. duPont de Nemours & Company, Incorporated, Wilmington, Delaware

MANUFACTURERS STANDARDIZATION SOCIETY OF THE VALVE & FITTINGS INDUSTRY
R. V. Warrick, Manufacturers Standardization Society of the Valve & Fittings Industry, Arlington, Virginia

NATIONAL ELECTRICAL MANUFACTURERS ASSOCIATION
R. F. Franciose, General Electric Company, Schenectady, New York
W. A. Samsonoff, Alternate, National Electrical Manufacturers Association, New York, New York

NATIONAL FLUID POWER ASSOCIATION
J. L. Fisher, Jr., Bellows-Valvair, Akron, Ohio

NATIONAL MACHINE TOOL BUILDERS' ASSOCIATION
L. G. Glesmann, Gleason Works, Rochester, New York

RCA CORPORATION
S. H. Watson, RCA Corporation, Camden, New Jersey

SOCIETY OF AUTOMOTIVE ENGINEERS, INCORPORATED
L. W. Falkner, Detroit Arsenal, Warren, Michigan
G. H. Garcina, General Motors Corporation, Indianapolis, Indiana
H. E. Guetzlaff, John Deere Waterloo Tractor Works, Waterloo, Iowa
R. P. Trowbridge, General Motors Corporation, Warren, Michigan
J. E. Long, Alternate, General Motors Corporation, Warren, Michigan
L. V. Porter, Alternate, General Electric Company, Lynn, Massachusetts

SOCIETY OF MANUFACTURING ENGINEERS
Joe Penn, Indianapolis, Indiana

SOCIETY OF NAVAL ARCHITECTS & MARINE ENGINEERS
G. R. Daniels, Quincy, Massachusetts

TECHNICAL DRAWING ASSOCIATES
W. Zbinden, Eltra Corporation, Toledo, Ohio
B. J. Round, Alternate, Combustion Engineering, Incorporated, Windsor, Connecticut

TELEPHONE GROUP, THE
G. A. Eisner, Western Electric Company, Incorporated, New York, New York
C. H. Heller, Bell Telephone Laboratories, Incorporated, Holmdel, New Jersey
G. Sawyer, Alternate, Bell Telephone Laboratories, Incorporated, Holmdel, New Jersey

TRADE AND HIGH SCHOOL GROUP
Frank Scott, Belleville Junior College, Belleville, Illinois

U.S. DEPARTMENT OF THE ARMY
C. A. Nazian, Frankford Arsenal, Philadelphia, Pennsylvania

U.S. DEPARTMENT OF COMMERCE
D. M. Mills, Patent Office Drafting Branch, Washington, D.C.

U.S. DEPARTMENT OF THE NAVY
Code 6033, U.S. Navy Department, Washington, D.C.
J. E. Walter, Naval Air Systems Command, Washington, D.C.

Copyright ASME International
Provided by IHS under license with ASME
No reproduction or networking permitted without license from IHS
Not for Resale

PERSONNEL OF SUBCOMMITTEE 7, GEARS AND SPLINES

J. E. Long, Chairman, General Motors Corporation, Warren, Michigan
W. M. Ahern, International Harvester Company, Melrose Park, Illinois
C. A. Alexander, Tool Steel Gear & Pinion Company, Cincinnati, Ohio
†*R. F. Beck,* Detroit, Michigan
R. J. Belansky, Illinois Tool Works, Chicago, Illinois
K. E. Botkin, Purdue University, Lafayette, Indiana
P. M. Dean, Mechanical Technology, Incorporated, Latham, New York
L. N. DeVos, Ford Motor Company, Livonia, Michigan
L. W. Falkner, Detroit Arsenal, Warren, Michigan
R. G. Hotchkiss, Gleason Works, Rochester, New York
Robert Koehler, Milwaukee Gear Company, Milwaukee, Wisconsin
W. G. Loveless, Michigan Tool Company, Traverse City, Michigan
**G. L. McCain,* Birmingham, Michigan
**W. B. McCardell,* Michigan Tool Company, Detroit, Michigan
C. A. Nazian, Frankford Arsenal, Philadelphia, Pennsylvania
L. V. Porter, General Electric Company, Lynn, Massachusetts
Thomas Raye, Reska Spline Products Company, Warren, Michigan
C. K. Reece, John Deere Waterloo Tractor Works, Waterloo, Iowa
G. L. Scott, American Gear Manufacturers Association, Washington, D.C.
D. L. Thurman, Caterpillar Tractor Company, East Peoria, Illinois
G. E. Tozer, General Motors Corporation, Pontiac, Michigan
W. L. Tuschak, General Motors Corporation, Ypsilanti, Michigan
†*C. A. Underwood,* West Roxbury, Massachusetts
J. T. Wilson, Ford Motor Company, Warren, Michigan

CONSULTANTS

Wells Coleman, Gleason Works, Rochester, New York
D. W. Dudley, International Harvester Company, San Diego, California
†*Bain Griffith,* Birmingham, Michigan
D. M. McIntosh, Jr., Perkins Machine & Gear Company, West Springfield, Massachusetts
W. D. Nelson, Illinois Tool Works, Chicago, Illinois
†*C. H. Parker,* North Springfield, Vermont
**M. E. Samuelson,* Barber-Colman Company, Rockford, Illinois
R. F. Zogbaum, Jr., Pratt & Whitney Aircraft Company, East Hartford, Connecticut

*Deceased
†Retired

Copyright ASME International
Provided by IHS under license with ASME
No reproduction or networking permitted without license from IHS
Not for Resale

CONTENTS

		Page
7-1	Scope	1
7-2	Purpose	1
7-2.1	Examples	1
7-2.2	Dimensioning and Notes	1
7-2.3	Abbreviations	1
7-3	General Drawing Practices	1
7-4	Gear Drawing Practices	3
7-4.1	Arrangement	3
7-4.2	Manufacturing Method	3
7-4.3	Spur and Helical Gear Teeth	3
7-4.4	Gear Tooth Thickness	8
7-4.5	Pressure Angle	8
7-5	Spur, Helical, Double-Helical, and Rack Formats	8
7-5.1	Format A	9
7-5.2	Format B	9
7-5.3	Format C	9
7-5.4	Format D	9
7-5.5	Double-Helical Gears	9
7-5.6	Rack Teeth	9
7-5.7	Involute Profile Specifications	9
7-5.8	Lead Specification	12
7-5.9	Root Fillets	12
7-5.10	Special Quality Requirements	12
7-6	Gear Nomenclature	12
7-6.1	Illustrations	12
7-6.2	Pitch Circle	13
7-6.3	Pitch Diameter	13
7-6.4	Diametral Pitch	13
7-6.5	Normal Diametral Pitch	13
7-6.6	Pitch Tolerance	13
7-6.7	Index Tolerance	13
7-6.8	Center Distance	13
7-6.9	Form Diameter	13
7-6.10	Radial Runout of a Gear	13
7-6.11	Lead	13
7-6.12	Transverse Diametral Pitch	13
7-6.13	Functional Tooth Thickness	13
7-6.14	Composite Action	15
7-6.15	Total Composite Action Tolerance	15
7-6.16	Tooth-To-Tooth Composite Action Tolerance	15
7-6.17	Controlled Profile	15
7-6.18	Active Face Width	15
7-6.19	Pressure Angle	15
7-6.20	Base Diameter	15
7-6.21	Norm	15
7-6.22	Normal Plane	15
7-6.23	Transverse	15
7-6.24	Transverse Plane	15

Copyright ASME International
Provided by IHS under license with ASME
No reproduction or networking permitted without license from IHS
Not for Resale

AMERICAN NATIONAL STANDARD

DRAFTING PRACTICES

GEAR DRAWING STANDARDS – PART 1
FOR SPUR, HELICAL, DOUBLE HELICAL, AND RACK

7-1 Scope

This standard sets forth methods to be followed for specifying drawing data for gears operating on axes which are parallel.

7-2 Purpose

It is the purpose of this standard to provide formats, nomenclature, and definitions for the following types of gears: Spur, Helical, Double-Helical, and Spur and Helical Racks. The minimum data for the various gear types are defined. Where additional data are required, methods for specifying these data are shown. Slight deviations for critical applications are recognized, provided general formats are maintained.

7-2.1 Examples. Various types of gears are illustrated by sample drawings which show the methods of delineating specifications.

7-2.2 Dimensioning and Notes. Illustrations show only those dimensions which control the gear teeth and their relation to the specified mounting. All other dimensions and specifications shall conform to recommended drafting practice. Dimensional values are indicated by X's to show the number of decimal places recommended in each instance.

Where required to assure calculations, such as for pin measurement or master gears, accurate to the fourth place to the right of the decimal point, it is necessary to specify the base diameter, pitch diameter, helix angle, and non-whole number diametral pitch to eight or seven significant places as shown in Figures 4 through 9.

7-2.2.1 All angular dimensions shall be expressed in degrees and decimal portions thereof. (Where desired, the angle may be given in degrees, minutes and seconds.)

7-2.3 Abbreviations. Notes and data may include those abbreviations listed in ANSI Z32.13 – 1950, Abbreviations for Use on Drawings; AGMA 112.04, Gear Nomenclature – Terms, Definitions, Symbols, and Abbreviations; or latest revisions. For use on military drawings and in technical type publications, MIL-STD-12, Abbreviations, should be used.

7-3 General Drawing Practices.

General drawing practices are covered in ANSI Y14.1 through ANSI Y14.5 of these American National Standard Drafting Practices. For the particular practices, refer to the applicable subsection.

Copyright ASME International
Provided by IHS under license with ASME
No reproduction or networking permitted without license from IHS

Not for Resale

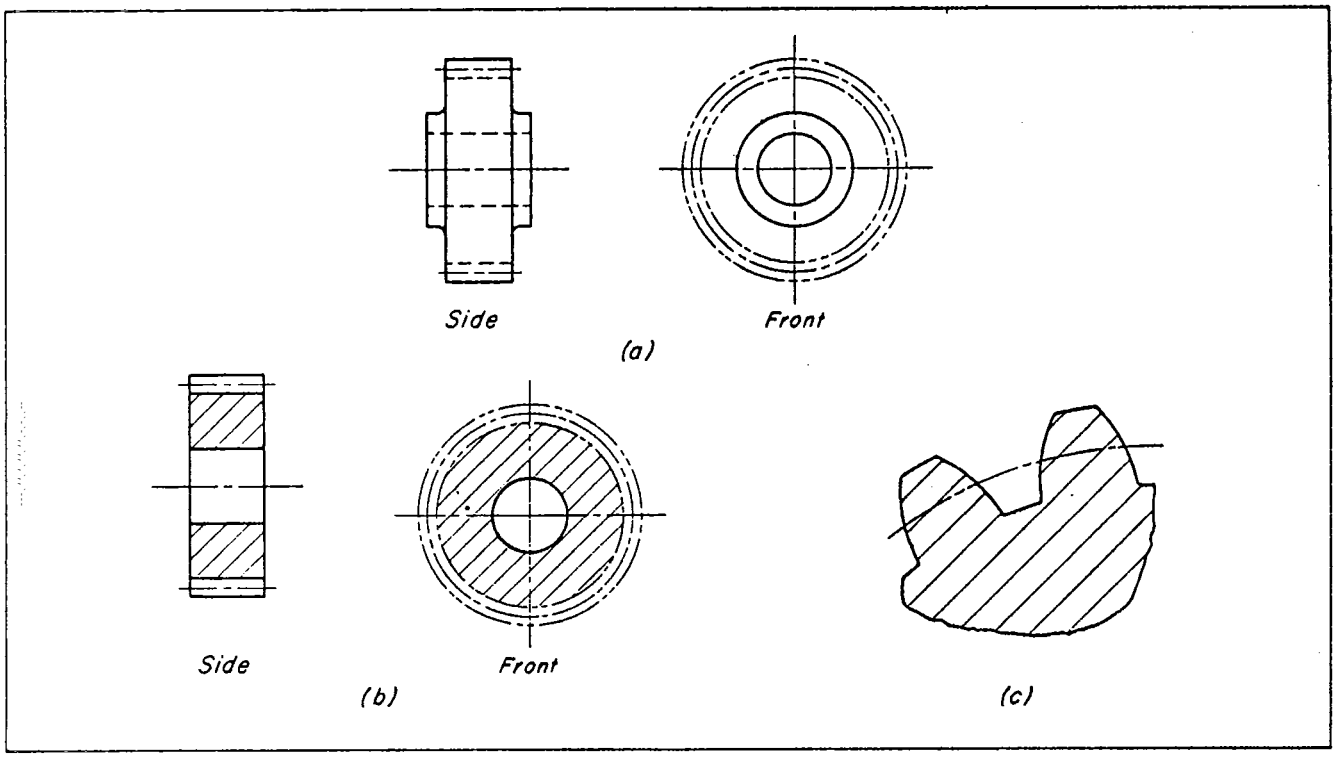

FIGURE 1

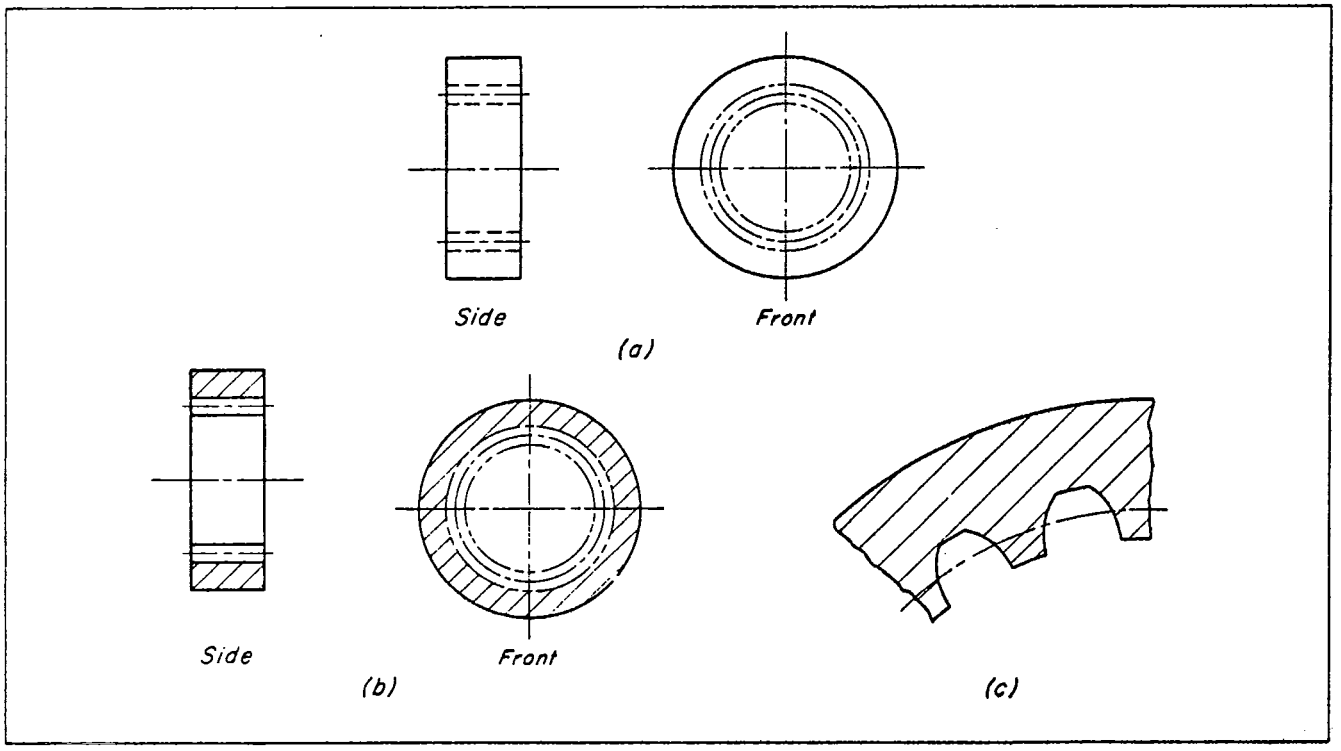

FIGURE 2

Copyright ASME International
Provided by IHS under license with ASME
No reproduction or networking permitted without license from IHS

Not for Resale

7-4 Gear Drawing Practices

7-4.1 Arrangement. The gear drawing shall clearly illustrate the general configuration. In making a gear drawing, dimensions and tolerances may be combined in different ways. The method of manufacture, the quantities involved and the desired inspection method may influence the method of dimensioning.

7-4.1.1 Gear data shall be grouped as illustrated and shall be presented in the order shown. The location of the gear data on the drawing shall be optional. However, where more than one gear is depicted on a drawing, the groups of gear data shall be clearly referenced to the appropriate gear.

7-4.1.2 The major diameter may be specified as the outside diameter and the minor diameter may be specified as root diameter. This is for external gears only. On internal gears the major diameter may be specified as the root diameter and the minor diameter may be specified as the inside diameter. This is in keeping with present usage in some segments of the gear industry.

7-4.2 Manufacturing Method. The drawing shall clearly depict the product without reference to a manufacturing or inspection method. This rule may be disregarded only where special situations are involved which do not lend themselves to exact specifications and tool inspection information is necessary for control.

7-4.3 Spur and Helical Gear Teeth.

7-4.3.1 Views of external spur and helical gears shall be drawn as shown in Figure 1. The front view shall be omitted where it is not required to show details or relationships of gear teeth to other features. Sections as shown in Figure 1(b) shall be used where required for illustration of internal features. Gear tooth outlines shall be omitted except where needed for orientation with other features of the gear or where details, such as tip chamfers or reliefs, require dimensioning. Where required, the teeth shall be shown as in Figure 1(c). They may be shown as fragments, as illustrated, or may be applied to the drawing as on views such as Figures 3(b) and 3(c).

7-4.3.2 Views of internal spur and helical gears shall be drawn as shown in Figure 2. The same drawing practices as described in Paragraph 7-4.3.1 shall be followed.

7-4.3.3 Gears having more than one set of teeth shall be drawn as shown in Figure 3. Where no relationship between features is required, the drawing shall so indicate, as in Figure 3(a). Figures 3(b) and 3(c) illustrate typical examples where angular relationships must be maintained. The same principles shall be used to show the relationship of keyseats or other features.

7-4.3.4 Roots of gears are identified on the drawing as illustrated in Figures 4 through 9. Where the radius of the root fillet must be controlled it shall be done as specified in Paragraph 7-5.9.

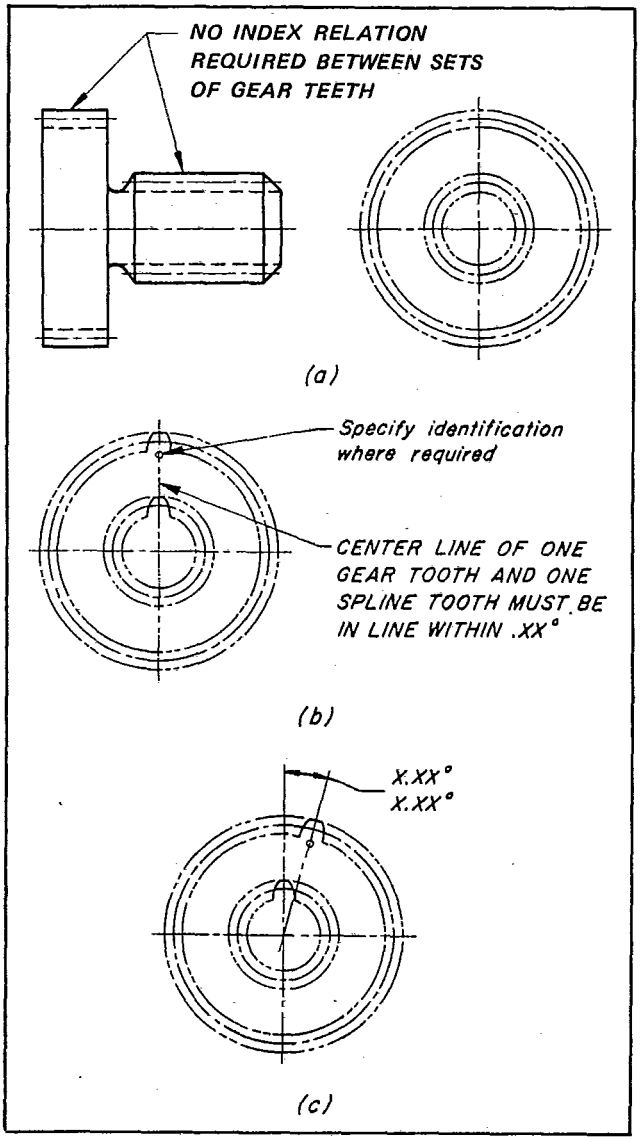

FIGURE 3

Copyright ASME International
Provided by IHS under license with ASME
No reproduction or networking permitted without license from IHS

Not for Resale

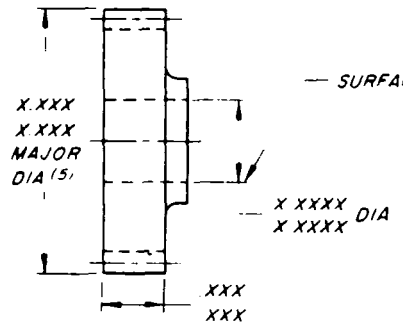

INVOLUTE SPUR GEAR DATA (1)

—— (2) —— ROOT
NUMBER OF TEETH XX
DIAMETRAL PITCH (3) XX
PRESSURE ANGLE XX.XX°
PITCH DIA X.XXXXXXXX REF
BASE DIA X.XXXXXXXX REF
FORM DIA (4) X.XXX
MINOR DIA (5) X.XXX-X.XXX
ACTL CIRC TOOTH THK AT PITCH DIA .XXXX-.XXXX
MEAS OVER TWO .XXXXX DIA PINS (6)
X.XXXX-X.XXXX REF
MAX RUNOUT .XXXX FIR (7)
ALL TOOTH ELEMENT SPECIFICATIONS ARE FROM DATUM ESTABLISHED BY THE AXIS OF SURFACE S

(a) Format A

Show data as in Format A, and add:
PITCH TOL .XXXX

(b) Format B

Show data as in Format A, and add:
PITCH TOL .XXXX
PROFILE TOL .XXXX

(c) Format C

For Format D, See Paragraph 7-5.4.

(d) Format D

1 Where view does not clearly delineate the gear, chart title shall be supplemented by the word "EXTERNAL".
2 Show here, either "FULL FILLET", "OPTIONAL" or "FLAT".
3 See Paragraph 7-2.2.
4 Where form diameter is given on a chart (Figures 12 and 14) value in the data shall be marked "REF".
5 See Paragraph 7-4.1.2.
6 See Paragraph 7-4.4.1.1.
7 See Paragraph 7-6.10.

FIGURE 4

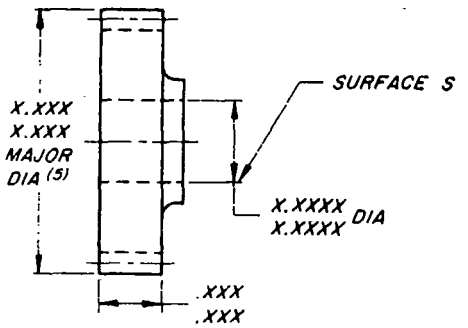

INVOLUTE HELICAL GEAR DATA (1)

—— (2) —— ROOT
NUMBER OF TEETH XX
DIAMETRAL PITCH-NORM (3) XX
PRESSURE ANGLE-NORM XX.XX°
HELIX ANGLE X.XXXXXXXX° REF
HAND OF HELIX X
LEAD XX.XXXX (8)
PITCH DIA X.XXXXXXXX REF
BASE DIA X.XXXXXXXX REF
FORM DIA (4) X.XXX
MINOR DIA (5) X.XXX-X.XXX
ACTL CIRC TOOTH THK-NORM AT PITCH DIA .XXXX-.XXXX
MEAS OVER TWO .XXXXX DIA BALLS (6)
X.XXXX-X.XXXX REF
MAX RUNOUT .XXXX FIR (7)
ALL TOOTH ELEMENT SPECIFICATIONS ARE FROM DATUM ESTABLISHED BY THE AXIS OF SURFACE S

(a) Format A

Show data as in Format A, and add:
PITCH TOL .XXXX

(b) Format B

Show data as in Format A, and add:
PITCH TOL .XXXX
PROFILE TOL .XXXX

(c) Format C

For Format D, See Paragraph 7-5.4.

(d) Format D

1 Where view does not clearly delineate the gear, chart title shall be supplemented by the word "EXTERNAL".
2 Show here, either "FULL FILLET", "OPTIONAL" or "FLAT".
3 See Paragraph 7-2.2.
4 Where form diameter is given on a chart (Figures 12 and 14) value in the data shall be marked "REF".
5 See Paragraph 7-4.1.2.
6 See Paragraph 7-4.4.1.1.
7 See Paragraph 7-6.10.
8 See Paragraph 7-5.8.

FIGURE 5

Copyright ASME International
Provided by IHS under license with ASME
No reproduction or networking permitted without license from IHS
Not for Resale

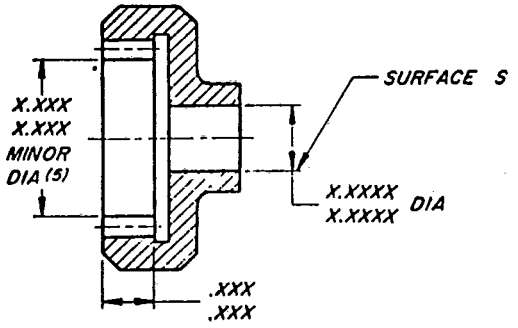

INVOLUTE SPUR GEAR DATA (1)

—— (2) —— ROOT
NUMBER OF TEETH XX
DIAMETRAL PITCH (3) XX
PRESSURE ANGLE XX.XX°
PITCH DIA X.XXXXXXXX REF
BASE DIA X.XXXXXXXX REF
FORM DIA (4) X.XXX
MAJOR DIA (5) X.XXX-X.XXX
ACTL CIRC TOOTH THK AT PITCH DIA .XXXX-.XXXX
MEAS BETWEEN TWO .XXXXX DIA PINS (6)
X.XXXX-X.XXXX REF
MAX RUNOUT .XXXX FIR (7)
ALL TOOTH ELEMENT SPECIFICATIONS ARE FROM DATUM ESTABLISHED BY THE AXIS OF SURFACE S

(a) Format A

Show data as in Format A, and add:
PITCH TOL .XXXX

(b) Format B

Show data as in Format A, and add:
PITCH TOL .XXXX
PROFILE TOL .XXXX

(c) Format C

For Format D, See Paragraph 7-5.4.

(d) Format D

1 Where view does not clearly delineate the gear, chart title shall be supplemented by the word "INTERNAL".
2 Show here, either "FULL FILLET", "OPTIONAL" or "FLAT".
3 See Paragraph 7-2.2.
4 Where form diameter is given on a chart (Figures 12 and 14) value in the data shall be makred "REF".
5 See Paragraph 7-4.1.2.
6 See Paragraph 7-4.4.1.1.
7 See Paragraph 7-6.10.

FIGURE 6

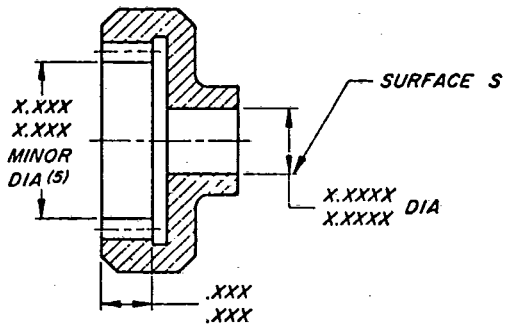

INVOLUTE HELICAL GEAR DATA (1)

—— (2) —— ROOT
NUMBER OF TEETH XX
DIAMETRAL PITCH-NORM (3) XX
PRESSURE ANGLE-NORM XX.XX°
HELIX ANGLE X.XXXXXXXX° REF
HAND OF HELIX X
LEAD XX.XXXX (8)
PITCH DIA X.XXXXXXXX REF
BASE DIA X.XXXXXXXX REF
FORM DIA (4) X.XXX
MAJOR DIA (5) X.XXX-X.XXX
ACTL CIRC TOOTH THK-NORM AT PITCH DIA .XXXX-.XXXX
MEAS BETWEEN TWO .XXXXX DIA BALLS (6)
X.XXXX-X.XXXX REF
MAX RUNOUT .XXXX FIR (7)
ALL TOOTH ELEMENT SPECIFICATIONS ARE FROM DATUM ESTABLISHED BY THE AXIS OF SURFACE S

(a) Format A

Show data as in Format A, and add:
PITCH TOL .XXXX

(b) Format B

Show data as in Format A, and add:
PITCH TOL .XXXX
PROFILE TOL .XXXX

(c) Format C

For Format D, See Paragraph 7-5.4.

(d) Format D

1 Where view does not clearly delineate the gear, chart title shall be supplemented by the word "INTERNAL".
2 Show here, either "FULL FILLET", "OPTIONAL" or "FLAT".
3 See Paragraph 7-2.2.
4 Where form diameter is given on a chart (Figures 12 and 14) value in the data shall be marked "REF".
5 See Paragraph 7-4.1.2.
6 See Paragraph 7-4.4.1.1.
7 See Paragraph 7-6.10.
8 See Paragraph 7-5.8.

FIGURE 7

Copyright ASME International
Provided by IHS under license with ASME
No reproduction or networking permitted without license from IHS
Not for Resale

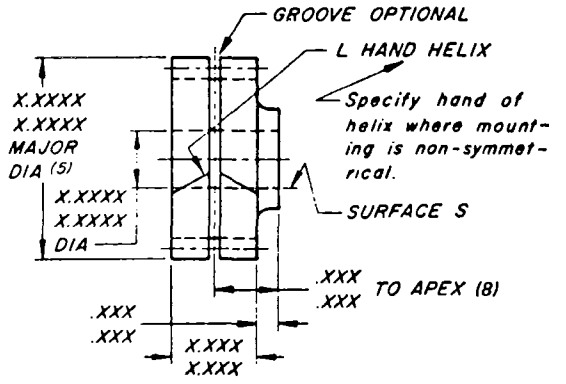

INVOLUTE DOUBLE-HELICAL (Herringbone) GEAR DATA (1)

—— (2) —— ROOT
NUMBER OF TEETH XX
DIAMETRAL PITCH-NORM (3) XX
PRESSURE ANGLE-NORM XX.XX°
HELIX ANGLE XX.XXXXXXXX° REF
LEAD X.XXXX (9)
PITCH DIA X.XXXXXXXX REF
BASE DIA X.XXXXXXXX REF
FORM DIA (4) X.XXX
MINOR DIA (5) X.XXX-X.XXX
ACTL CIRC TOOTH THK - NORM AT PITCH DIA
.XXXX-.XXXX
MEAS OVER TWO .XXXXX DIA BALLS (6)
X.XXXX-X.XXXX REF
MAX RUNOUT .XXXX FIR (7)
ALL TOOTH ELEMENT SPECIFICATIONS ARE FROM DATUM ESTABLISHED BY THE AXIS OF SURFACE S

(a) Format A

Show data as in Format A, and add:
PITCH TOL .XXXX

(b) Format B

Show data as in Format A, and add:
PITCH TOL .XXXX
PROFILE TOL .XXXX

(c) Format C

For Format D, See Paragraph 7-5.4.

(d) Format D

1 Where view does not clearly delineate the gear, chart title shall be supplemented by the word "EXTERNAL".
2 Show here, either "FULL FILLET", "OPTIONAL" or "FLAT".
3 See Paragraph 7-2.2.
4 Where form diameter is given on a chart (Figures 12 and 14) value in the data shall be marked "REF".
5 See Paragraph 7-4.1.2.
6 See Paragraph 7-4.4.1.1.
7 See Paragraph 7-6.10.
8 The tooth apex must be dimensioned from the locating datum.
9 See Paragraph 7-5.8.

FIGURE 8

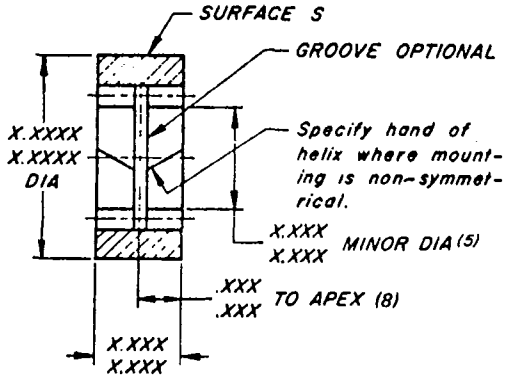

INVOLUTE DOUBLE-HELICIAL (Herringbone) GEAR DATA (1)

—— (2) —— ROOT
NUMBER OF TEETH XX
DIAMETRAL PITCH-NORM (3) XX
PRESSURE ANGLE-NORM XX.XX°
HELIX ANGLE XX.XXXXXXXX° REF
LEAD X.XXXX (9)
PITCH DIA X.XXXXXXXX REF
BASE DIA X.XXXXXXXX REF
FORM DIA (4) X.XXX
MAJOR DIA (5) X.XXX-X.XXX
ACTL CIRC TOOTH THK-NORM AT PITCH DIA
.XXXX-.XXXX
MEAS BETWEEN TWO .XXXXX DIA BALLS (6)
X.XXXX-X.XXXX REF
MAX RUNOUT .XXXX FIR (7)
ALL TOOTH ELEMENT SPECIFICATIONS ARE FROM DATUM ESTABLISHED BY THE AXIS OF SURFACE S

(a) Format A

Show data as in Format A, and add:
PITCH TOL .XXXX

(b) Format B

Show data as in Format A, and add:
PITCH TOL XXXX
PROFILE TOL .XXXX

(c) Format C

For Format D, See Paragraph 7-5.4.

(d) Format D

1 Where view does not clearly delineate the gear, chart title shall be supplemented by the word "INTERNAL".
2 Show here, either "FULL FILLET", "OPTIONAL" or "FLAT".
3 See Paragraph 7-2.2.
4 Where form diameter is given on a chart (Figures 12 and 14) value in the data shall be makred "REF".
5 See Paragraph 7-4.1.2.
6 See Paragraph 7-4.4.1.1.
7 See Paragraph 7-6.10.
8 The tooth apex must be dimensioned from the locating datum.
9 See Paragraph 7-5.8.

FIGURE 9

Copyright ASME International
Provided by IHS under license with ASME
No reproduction or networking permitted without license from IHS
Not for Resale

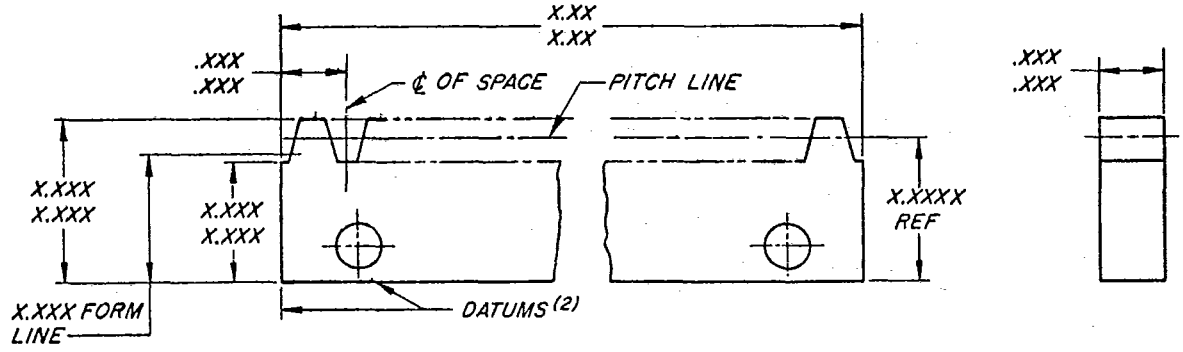

SPUR RACK DATA

NUMBER OF TEETH XX
DIAMETRAL PITCH (1) XX REF
LINEAR PITCH .XXXX
PRESSURE ANGLE XX°
ACTUAL TOOTH THICKNESS AT PITCH LINE (3) .XXXX-.XXXX
PITCH TOL .XXXX
INDEX TOL .XXXX

ALL TOOTH ELEMENT SPECIFICATIONS ARE FROM THE SPECIFIED DATUM.

1 Show seven significant places to right of decimal point where not a whole number.

2 Holes may also be used as datums. See Figure 11.

3 May be supplemented by pin method measurement designated as reference.

FIGURE 10

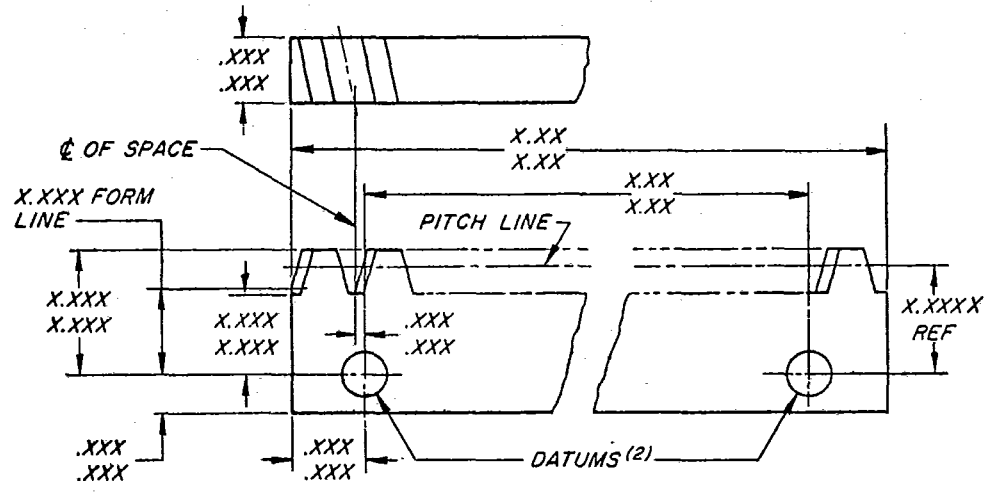

HELICAL RACK DATA

NUMBER OF TEETH XX
DIAMETRAL PITCH-NORM (1) XX REF
LINEAR PITCH-NORM .XXXX
PRESSURE ANGLE-NORM XX°
ACTUAL TOOTH THICKNESS AT PITCH LINE-NORM (3) .XXXX-.XXXX
TOOTH ANGLE (HELIX ANGLE) X.XXXXXXXX°
HAND OF HELIX X
PITCH TOL .XXXX
INDEX TOL .XXXX

ALL TOOTH ELEMENT SPECIFICATIONS ARE FROM THE SPECIFIED DATUM.

1 Show seven significant places to right of decimal point where not a whole number.

2 Surfaces may also be used as datums. See Figure 10.

3 May be supplemented by pin method measurement designated as reference.

FIGURE 11

Copyright ASME International
Provided by IHS under license with ASME
No reproduction or networking permitted without license from IHS

Not for Resale

7-4.4 Gear Tooth Thickness

7-4.4.1 Circular or arc tooth thickness is the preferred specification; chordal tooth thickness may be used. Tooth thickness is normally specified at the referenced pitch circle.

7-4.4.1.1 Where measurements such as with pins or balls are specified in addition to the actual tooth thickness, these measurements shall be labeled "reference", as in Figures 4 through 7. In these figures, measurement over two pins or balls have been indicated. Measurements using one or three pins or balls may also be specified as appropriate. Measurements with balls may also be specified on double-helical gears. Diameter of pins or balls shall be expressed beyond four decimal places as appropriate. The diameter of pins or balls is basic.

7-4.4.2 Tooth thickness shall be designated as "actual" or "functional".

7-4.4.2.1 Functional tooth thickness is a specification, at the referenced pitch circle, for definitive backlash control. It may be used in place of, or in addition to, actual tooth thickness. However, if the actual tooth thickness is critical, it should be specified in addition to the functional tooth thickness.

7-4.4.2.2 Where maximum and minimum functional tooth thickness is specified in addition to the maximum and minimum actual tooth thickness, the maximum actual tooth thickness shall be designated as "reference".

7-4.5 Pressure Angle. The pressure angle is specified at the referenced pitch diameter. On helical gears it is given in the normal plane and is identified as NORMAL PRESSURE ANGLE.

7-5 Spur, Helical, Double-Helical, and Rack Formats

Varying quality levels for gears require drawings having an appropriate degree of definitive specification. In this standard the drawings have been divided into four basic formats. For guidance on quality level formats, coarse pitch quality classes shown in the AGMA Gear Classification Manual may be used. The position of the numerical values related to the gear element or feature description is optional. It may be placed immediately adjacent to the element or feature description, as shown in the figures of this drawing standard, or the values may be columnized.

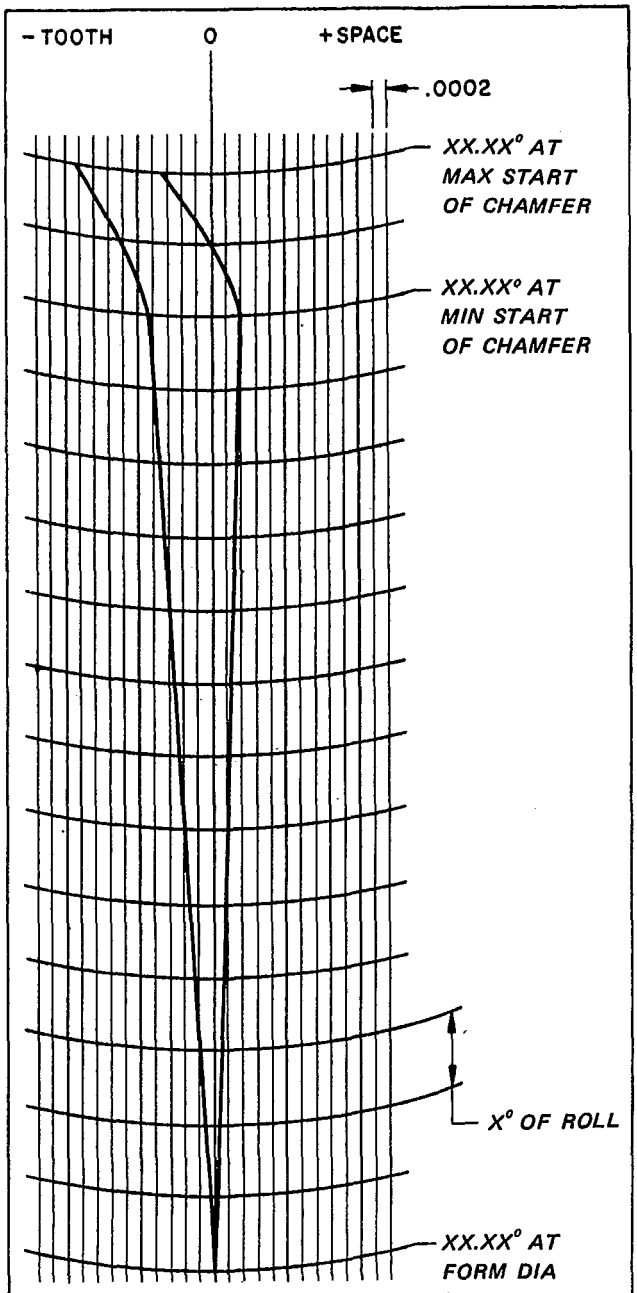

FIGURE 12

Copyright ASME International
Provided by IHS under license with ASME
No reproduction or networking permitted without license from IHS

Not for Resale

7-5.1 Format A. Format A includes AGMA quality classes 3, 4 and 5, and the drawing shall show the basic data as shown in Figures 4(a) through 9(a).

7-5.2 Format B. Format B includes AGMA quality class 6, and the drawing shall show the basic data from Figures 4(a) through 9(a), plus the specification for the pitch tolerance, as indicated by Figures 4(b) through 9(b).

7-5.3 Format C. Format C includes AGMA quality class 7, and the drawing shall include the basic data from Figures 4(a) through 9(a), plus the specifications for pitch and profile tolerance, as shown in Figures 4(c) through 9(c).

7-5.4 Format D. Formats for gears requiring specifications beyond those covered by Formats A, B and C are designated for convenience as Format D. Format D is not illustrated due to the number of variations which may apply. Format D includes AGMA quality classes 8 through 15, and the drawing shall show the basic data as shown in Figures 4(a) through 9(a), plus the specifications for pitch tolerance, profile tolerance, lead tolerance and total index tolerance if needed. The total composite action tolerance may be included, but if it is, the runout tolerance shall not be shown. The total composite action tolerance may be specified without the tolerances for runout, pitch, total index, profile and lead, in which case it shall be understood that the total composite action tolerance covers these latter tolerances. If the total composite action tolerance is included with the others, then each shall be used individually. For this format, it may be desirable to specify the minimum root fillet as in Figure 15 and to specify any lead crown as in Figure 14. Lead and lead crown specifications are included for spur gears as required.

7-5.4.1 Where composite action tolerance is specified, the operating pressure angle, if known, shall be specified by the following notes:

(a) .XXXX MAX TOTAL COMPOSITE ACTION AT XX.XX° MAXIMUM TRANSVERSE PRESSURE ANGLE

(b) .XXXX MAX TOOTH TO TOOTH COMPOSITE ACTION AT XX.XX° MAXIMUM TRANSVERSE PRESSURE ANGLE.

7-5.5 Double-Helical Gears. Double-helical gears, as shown in Figures 8 and 9, are essentially helical gears of opposite hand placed together. The teeth may be continuous, forming an apex, or a gap may be used and then the teeth may be either staggered or non-staggered. Where no gap or groove is present at the apex, the gear is called a "herringbone" gear.

7-5.6 Rack Teeth. Rack teeth shall be dimensioned as shown in Figures 10 and 11.

7-5.7 Involute Profile Specifications.

7-5.7.1 Where an involute profile tolerance is given without the definitive control of a chart, specifications such as illustrated in Figures 4(c) through 9(c) are acceptable.

7-5.7.1.1 This method of involute tolerance shall be interpreted as total zone. The direction of the trace may be plus or minus from the true involute form at any point along the controlled profile and must lie within the total zone specified.

7-5.7.2 Where definitive involute profile specification is desired for either true form or modified form, charts shall be used. Typical charts are shown in Figures 12 and 14. These charts shall show the allowed variations, starting at the form diameter and extending to the start of chamfer or the major diameter.

7-5.7.2.1 The form diameter, pitch diameter, start of relief diameter, start of chamfer diameter or other control points shall be specified in degrees of involute roll from the base circle.

7-5.7.2.2 The start of chamfer diameter may be specified on the involute profile chart as illustrated in Figures 12 and 14.

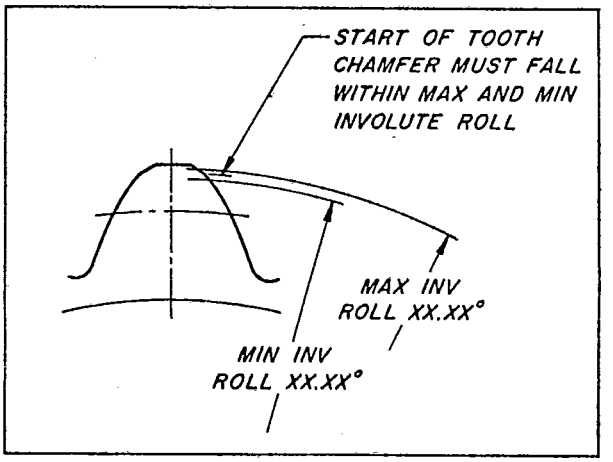

FIGURE 13

Copyright ASME International
Provided by IHS under license with ASME
No reproduction or networking permitted without license from IHS
Not for Resale

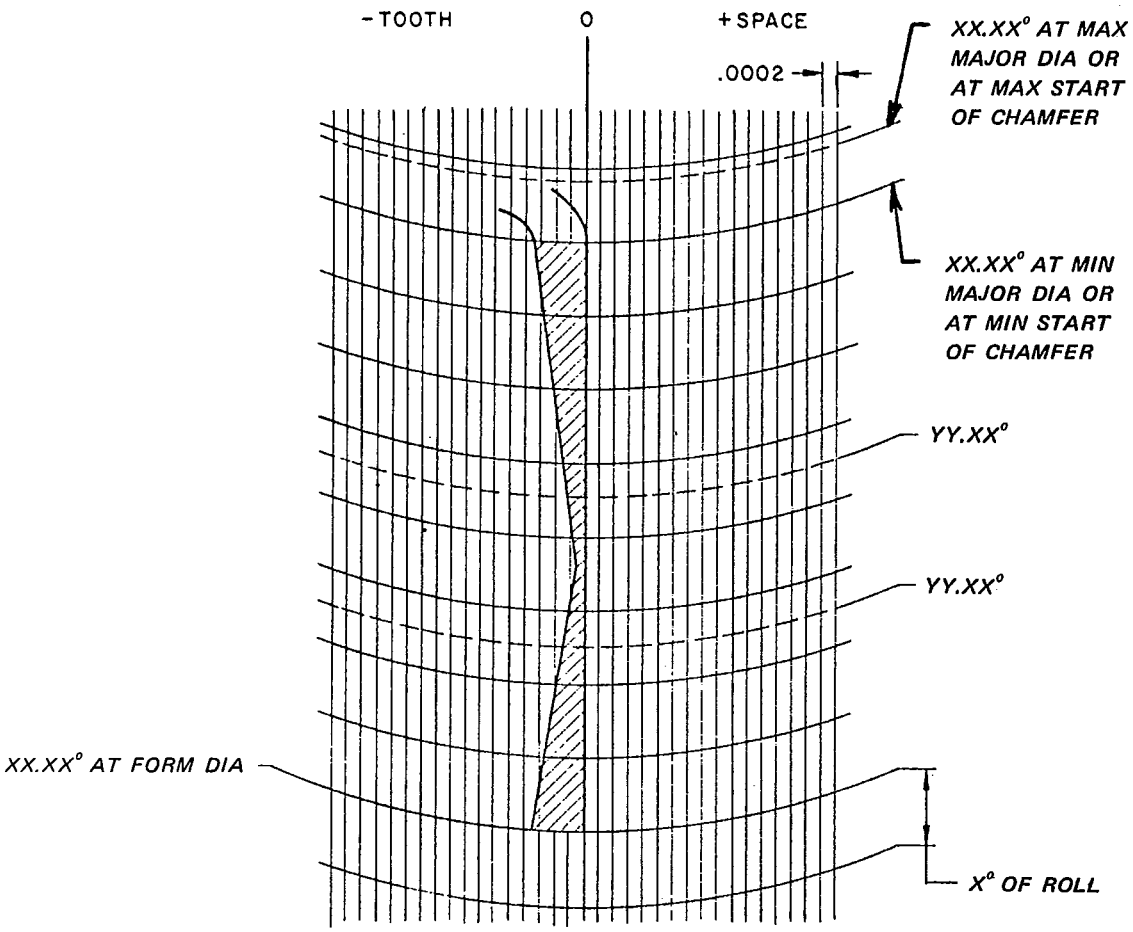

.XX-.XX BY XX° - XX° CHAMFER ENDS OF HELICAL GEAR TEETH INCLUDING THE ENTIRE INVOLUTE AND TOOTH ROOT ON BOTH ENDS. CHAMFER ANGLE MEASURED FROM FACE.

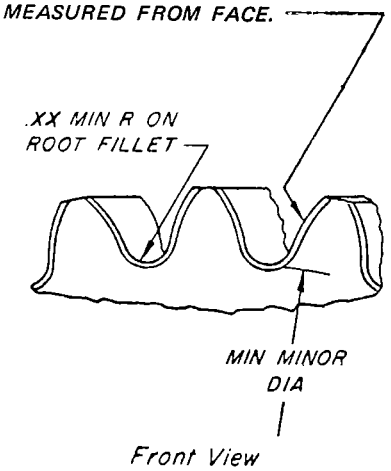

INVOLUTE TOLERANCE

THE TRACE AS TAKEN FROM THE INVOLUTE PROFILE SHALL FALL WITHIN THE SHADED AREA.

THE HIGH POINT OF THE PROFILE SHALL BE BETWEEN YY.XX° AND YY.XX° OF ROLL.

(Figure 14 is continued on Page 11)

FIGURE 14

Copyright ASME International
Provided by IHS under license with ASME
No reproduction or networking permitted without license from IHS

Not for Resale

(Figure 14 continued)

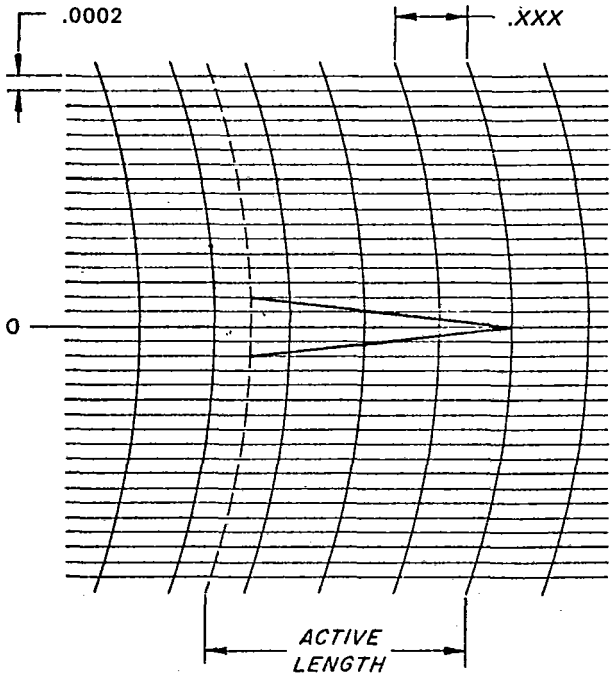

LEAD TOLERANCE PLUS AND MINUS .XXXX

THE TRACE TAKEN SHALL FALL WITHIN THE WEDGE SHOWN ON THE CHART. DEVIATIONS FROM A STRAIGHT LINE OR A SMOOTH CONVEX CURVE MAY NOT EXCEED .XXXX IN ANY .XXX LENGTH.

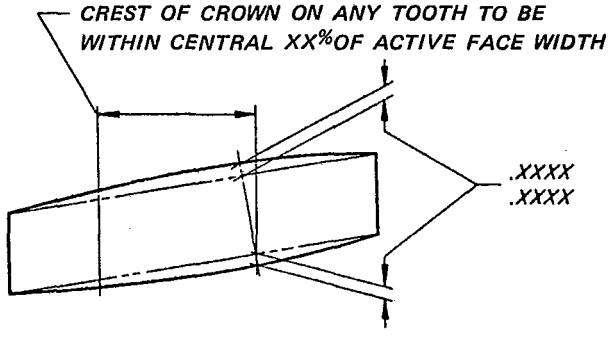

CROWN BOTH SIDES

[1] See Paragraph 7-4.1.2.

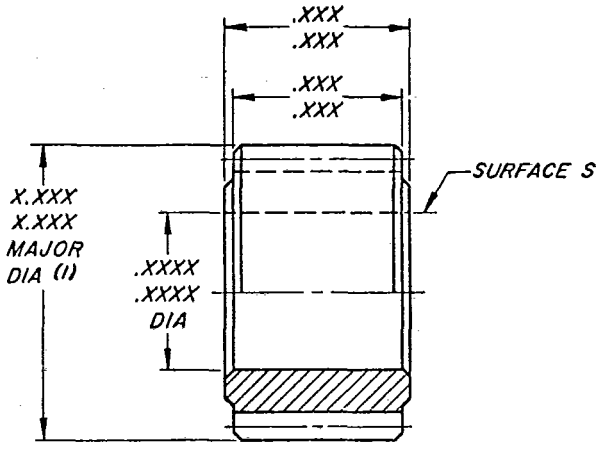

INVOLUTE HELICAL GEAR DATA

FULL FILLET ROOT
NUMBER OF TEETH XX
DIAMETRAL PITCH-NORM XX
PRESSURE ANGLE-NORM XX.XX°
HELIX ANGLE XX.XXXXXXX° REF
HAND OF HELIX X
LEAD XX.XXXX
PITCH DIA X.XXXXXXXX REF
BASE DIA X.XXXXXXXX REF
FORM DIA X.XXX REF
MINOR DIA (1) X.XXX-X.XXX
ACTUAL CIRC TOOTH THK-NORM .XXXX-.XXXX
MEAS OVER TWO .XXXXX DIA BALLS
X.XXXX-X.XXXX REF
TOTAL INDEX TOL .XXXX
PITCH TOL .XXXX
TOTAL COMPOSITE ACTION AT XX.XX° MAX
TRANSVERSE PRESSURE ANGLE .XXXX MAX
TOOTH TO TOOTH COMPOSITE ACTION AT XX.XX°
MAX TRANSVERSE PRESSURE ANGLE .XXXX MAX
ALL TOOTH ELEMENT SPECIFICATIONS ARE FROM
DATUM ESTABLISHED BY THE AXIS OF SURFACE S

Copyright ASME International
Provided by IHS under license with ASME
No reproduction or networking permitted without license from IHS
Not for Resale

7-5.7.2.3 Notes which clarify or provide added involute profile specifications may be added. Figures 12 and 14 show examples of such notes.

7-5.7.2.4 The involute profile chart shall always be drawn vertically as shown. The tolerance band illustrated in Figures 12 and 14 is not to be considered as a recommendation by this standard, but as examples of many possible control forms.

7-5.7.3 Where charts are not used, the start of chamfer shall be specified as in Figure 13.

7-5.8 Lead Specification.

7-5.8.1 Where a lead tolerance is given without the definitive control of a chart, the specification shall be by note:

LEAD TOLERANCE .XXXX

7-5.8.1.1 This method of lead control shall be interpreted as plus or minus the amount of tolerance specified from a true lead.

7-5.8.1.2 Lead tolerance is the tolerance on the tooth position as defined by the lead specification. This tolerance is applied to the full tooth length, active tooth length, or per inch of tooth length as specified.

7-5.8.2 Where definitive lead specification is desired for either true lead or modified lead, a chart shall be used. A typical chart is shown in Figure 14. These charts shall show the allowed variation from the desired lead for the active length of the gear face width.

7-5.8.2.1 Notes which clarify or provide added lead specifications may be added as shown in Figure 14.

7-5.8.2.2 The lead chart shall always be drawn in the horizontal plane as shown.

7-5.8.3 Lead crown specifications shall be shown as in Figure 14.

7-5.9 Root Fillets. Where a minimum radius on root fillet is required, it shall be specified as:

.XX MIN R ON ROOT FILLET

7-5.9.1 On full fillet roots, the note means that the curvature in the fillet may have any radius larger than the minimum specified provided the fillet represents a smooth blending of curvature and the requirements for the limits on major or minor diameter and form diameter are met.

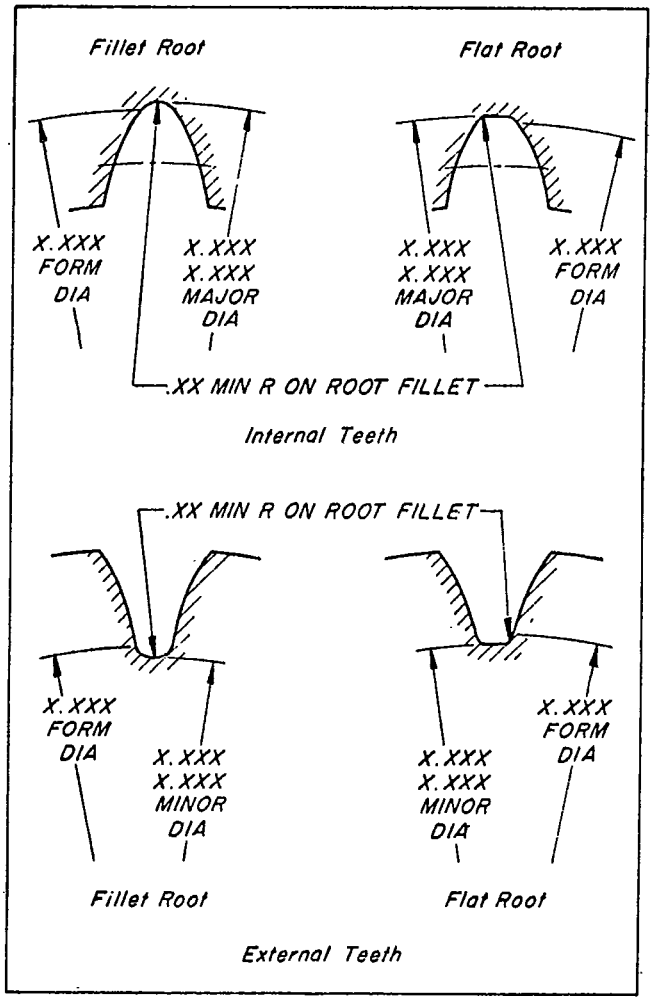

FIGURE 15

7-5.9.2 On a flat root the note shall be interpreted as the minimum radius of curvature allowed at the intersection of the flat root with the side of the gear tooth. Larger radius of curvature is allowed provided the limits for major or minor diameter and form diameter are met.

7-5.9.3 Where desired, the appropriate view shown in Figure 15 may be included on the drawing.

7-5.10 Special Quality Requirements. Figure 14 depicts a helical gear drawing illustrating a number of the more specialized quality requirements for helical gears.

7-6 Gear Nomenclature.

7-6.1 Illustrations. Figure 16 shows the usual terms for gear tooth features. Figure 17 shows

Copyright ASME International
Provided by IHS under license with ASME
No reproduction or networking permitted without license from IHS
Not for Resale

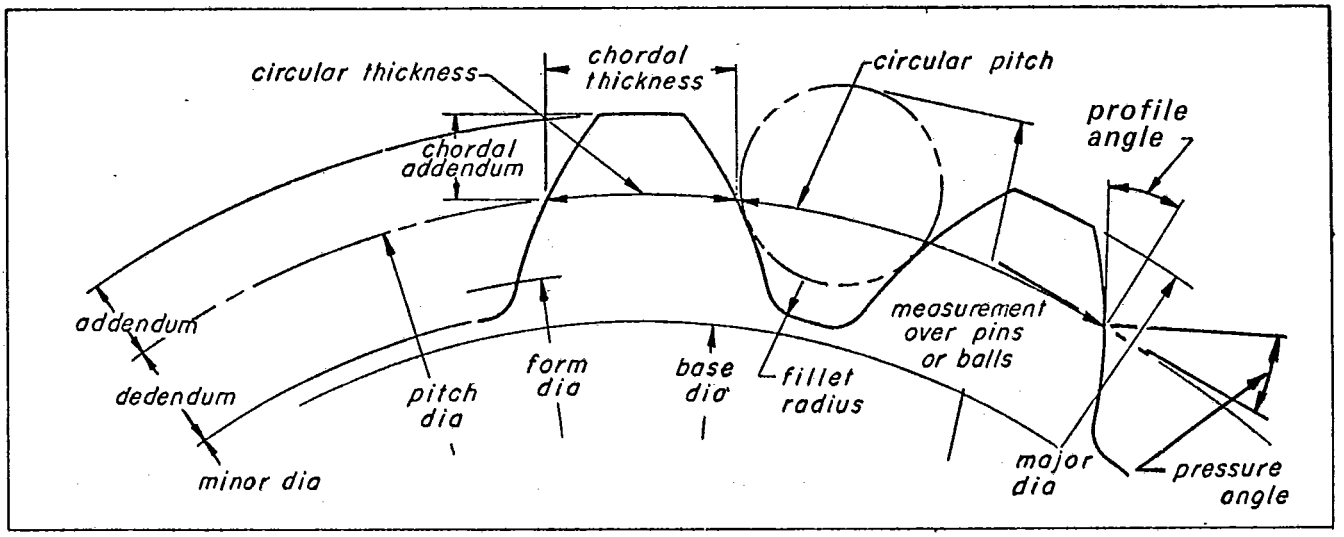

FIGURE 16

profile deviations. Figure 18 shows terms used for helical gear and helical rack teeth.

7-6.2 Pitch Circle. The reference circle from which all transverse gear tooth dimensions are constructed.

7-6.3 Pitch Diameter. The diameter of the pitch circle and is always noted reference.

7-6.4 Diametral Pitch. The ratio of the number of teeth to the pitch diameter in inches and is an indication of tooth size.

7-6.5 Normal Diametral Pitch. The value of diametral pitch in a normal plane of a helical gear.

7-6.6 Pitch Tolerance. The maximum difference between any two successive tooth-to-tooth readings taken at the pitch circle between corresponding sides of adjacent teeth.

7-6.7 Index Tolerance. The greatest difference in any two teeth (adjacent or otherwise) between the actual and the perfect spacing of teeth profiles.

7-6.8 Center Distance. The distance between the parallel axes of spur gears and parallel helical gears, or the crossed axes of crossed helical gears.

7-6.9 Form Diameter. The diameter at which the involute profile control originates. It is in the segment near the base of the tooth which, along with tooth tip or start of tooth tip chamfer, defines the controlled profile depth.

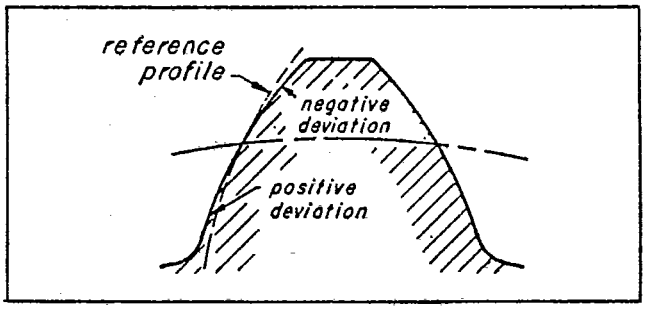

FIGURE 17

7-6.10 Radial Runout of a Gear. The total difference between high and low readings of a dial indicator suitably arranged to denote the variation in position or out of roundness of the tooth profiles with respect to the gear journals or the axis about which the gear rotates.

7-6.11 Lead. The axial advance of a helix for one complete turn, as in the threads of cylindrical worms and teeth of helical gears. For the purpose of analysis of this type of error, a spur gear shall be considered as a helical gear having zero helix angle.

7-6.12 Transverse Diametral Pitch. Applied to a helical gear, this is the ratio of the number of teeth to the pitch diameter in inches.

7-6.13 Functional Tooth Thickness. The actual tooth thickness of a gear plus the increase in functional size caused by the cumulative effect of gear element variations. The backlash between any two meshed part gears is the result of their

Copyright ASME International
Provided by IHS under license with ASME
No reproduction or networking permitted without license from IHS
Not for Resale

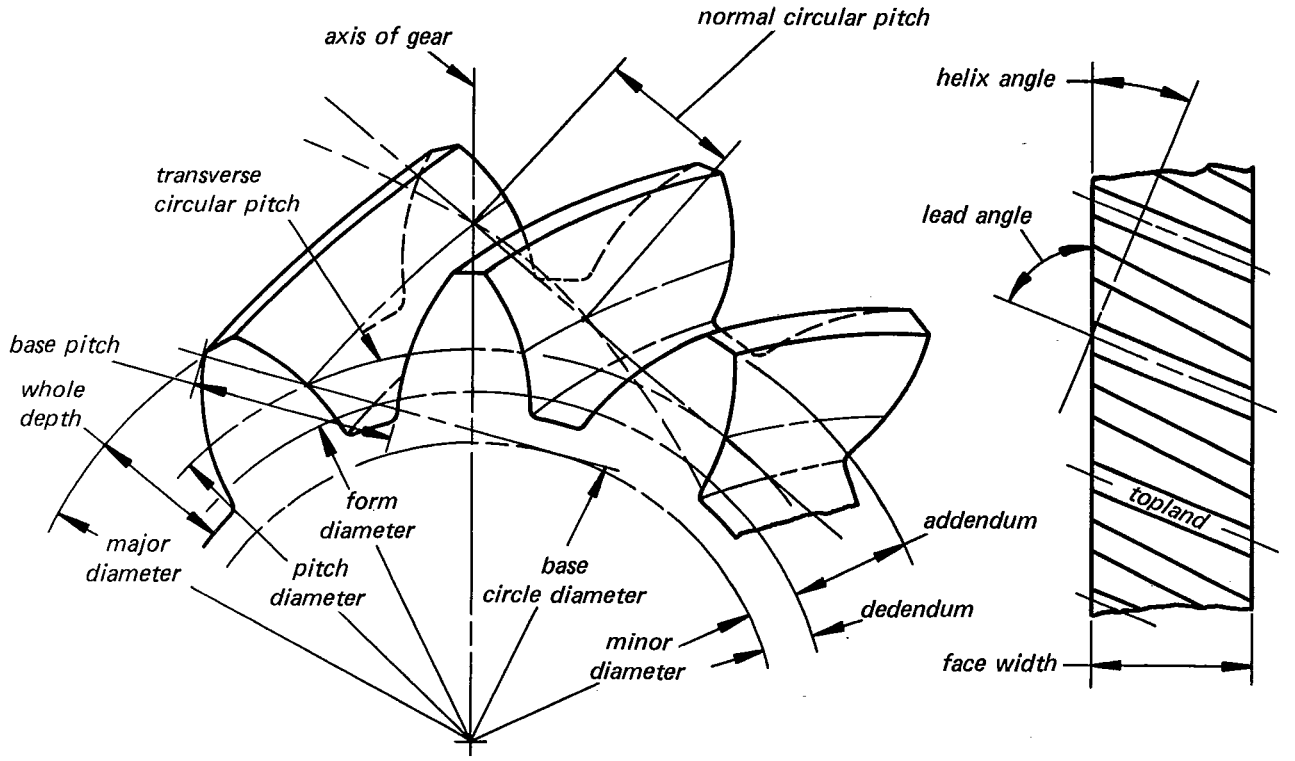

Helical Gear

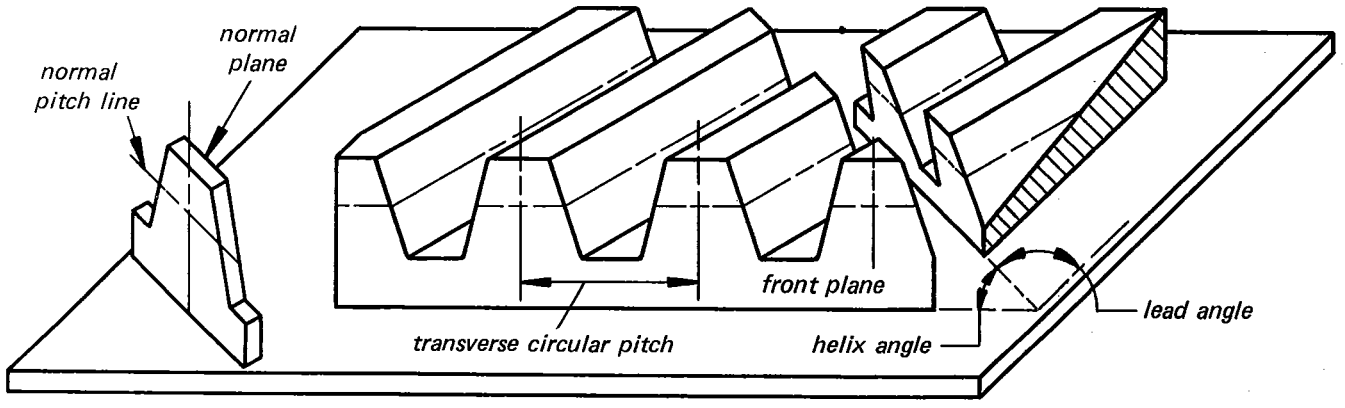

Helical Rack

FIGURE 18

Copyright ASME International
Provided by IHS under license with ASME
No reproduction or networking permitted without license from IHS
Not for Resale

functional tooth thicknesses and the mounting center distance.

7-6.14 Composite Action. The variation in center distance where two gears are rolled in tight mesh (no backlash).

7-6.15 Total Composite Action Tolerance. The center distance variation allowed during one complete revolution of the gear being inspected. This includes the effect of variations in controlled profile, lead, pitch, tooth thickness, axial runout and radial runout.

7-6.16 Tooth-to-Tooth Composite Action Tolerance. The center distance variation allowed where the gear is rotated through any increment of 360°/N, (where N is the number of teeth in the gear being inspected). This includes the effect of variations in controlled profile, lead and pitch.

7-6.17 Controlled Profile. The portion of the tooth face bounded by the form diameter, the tooth tip or start of tooth tip chamfer and limits of the active face width.

7-6.18 Active Face Width. The portion of a gear face width which can come into contact with a mating gear or gears. In the event a specific active face width is not specified on the part drawing, the entire face width shall be considered as the active face width.

7-6.19 Pressure Angle. An angle, one leg of which is a line perpendicular to a line tangent to the involute at the pitch diameter and the other leg a line perpendicular to a radial line passing through the point of tangency. Unless otherwise specified, the pressure angle is taken at the referenced pitch diameter.

7-6.20 Base Diameter. The diameter of the circle from which involute tooth profiles are derived.

7-6.21 Norm. The term used on drawings to indicate that the dimension so modified applies in a normal plane.

7-6.22 Normal Plane. A plane normal to a tooth surface at a pitch point, and perpendicular to the pitch plane. In a helical rack, a normal plane is normal to all the teeth it intersects. In a helical gear, however, a plane can be normal to only one tooth at a point lying in the plane surface. At such a point, the normal plane contains the line normal to the tooth surface and is normal to the pitch surface.

7-6.23 Transverse. The term used on drawings to indicate that the dimension so modified applies in a transverse plane.

7-6.24 Transverse Plane. A plane perpendicular to the axial plane and to the pitch plane. In gears with parallel axes, the transverse plane and plane of rotation coincide.

Copyright ASME International
Provided by IHS under license with ASME
No reproduction or networking permitted without license from IHS

Not for Resale

ASME Y14.7.1 71 ■ 2595512 0049089 2

AMERICAN NATIONAL STANDARDS OF PARTICULAR INTEREST TO DESIGNERS, ARCHITECTS AND DRAFTSMEN

TITLE OF STANDARD

American National Standard Drafting Practices
- Section 1 Size and Format Y14.1–1957
- Section 2 Line Conventions, Sectioning and Lettering Y14.2–1957
- Section 3 Projections Y14.3–1957
- Section 4 Pictorial Drawing Y14.4–1957
- Section 5 Dimensioning and Tolerancing for Engineering Drawings Y14.5–1966
- Section 6 Screw Threads Y14.6–1957
- Section 7 Gears and Splines Y14.7.1–1971
- Section 8 Castings ..... In Preparation
- Section 9 Forgings Y14.9–1958
- Section 10 Metal Stampings Y14.10–1959
- Section 11 Plastics Y14.11–1958
- Section 13 Springs, Helical and Flat ..... In Preparation
- Section 14 Mechanical Assemblies Y14.14–1961
- Section 15 Electrical and Electronics Diagrams Y14.15–1966
- Section 15-11 Interconnection Diagrams Y14.15a–1971
- Section 17 Fluid Power Diagrams Y14.17–1966
- Section 18 Drawings for Optical Parts ..... In Preparation
- Section 22 Drawing Titles and Notes ..... In Preparation
- Section 24 Classifications of Drawings ..... In Preparation
- Section 25 Guide for Numbering Systems ..... In Preparation
- Section 26 Computer Graphics ..... In Preparation

Illustrations for Publication and Projection Y15.1–1959

Time Series Charts Y15.2–1960

Graphic Symbols for:
- Electrical and Electronics Diagrams Y32.2–1970
- Welding Y32.3–1969
- Plumbing Y32.4–1955
- Use on Railroad Maps and Profiles Y32.7–1957
- Fluid Power Diagrams Y32.10–1967
- Process Flow Diagrams in Petroleum and Chemical Industries Y32.11–1961
- Metallizing Symbols Y32.12–1960
- Nondestructive Testing Symbols Y32.17–1962
- Mechanical and Acoustical Element as Used in Schematic Diagrams Y32.18–1968
- Pipe Fittings, Valves and Piping ..... Z32.2.3–1949 (Reaffirmed 1953)
- Heating, Ventilating and Air Conditioning ..... Z32.2.4–1949 (Reaffirmed 1953)
- Heat-Power Apparatus ..... Z32.2.6–1950 (Reaffirmed 1956)

Letter Symbols for:
- Hydraulics Y10.2–1958
- Quantities Used in Mechanics for Solid Bodies Y10.3–1968
- Heat and Thermodynamics Y10.4–1957
- Quantities Used in Electrical Science and Electrical Engineering Y10.5–1968
- Aeronautical Sciences Y10.7–1954
- Structural Analysis Y10.8–1962
- Meteorology Y10.10–1953
- Acoustics Y10.11–1953 (Reaffirmed–1959)
- Chemical Engineering Y10.12–1955 (Reaffirmed–1961)
- Rocket Propulsion Y10.14–1959
- Petroleum Reservoir Engineering and Electric Logging Y10.15–1958
- Shell Theory Y10.16–1964
- Guide for Selecting Greek Letters Used as Letter Symbols for Engineering Mathematics Y10.17–1961
- Illuminating Engineering Y10.18–1967
- Units Used in Science and Technology Y10.19–1969
- Abbreviations for Scientific and Engineering Terms Z10.1–1941
- Physics Z10.6–1948

The ASME Publications Catalog shows a complete list of all Standards published by the Society. Binders for holding these Standards are available upon request.

Copyright ASME International
Provided by IHS under license with ASME
No reproduction or networking permitted without license from IHS
Not for Resale