Engineering Drawing
and Related
Documentation
Practices

ASME Y14.6-2001

[Revision and Consolidation of ANSI Y14.6-1978 (R1998)
and ANSI Y14.6M-1981 (R1998)]

SCREW THREAD REPRESENTATION

An American National Standard

The American Society of
Mechanical Engineers

Copyright ASME International
Provided by IHS under license with ASME
No reproduction or networking permitted without license from IHS

Not for Resale

ADOPTION NOTICE

ASME Y14.6, Screw Thread Representation, was adopted on 2 November 2001 for use by the Department of Defense, DoD. Proposed changes by DoD activities must be submitted to the DoD Adopting Activity: Commander, US Army TACOM-ARDEC, ATTN: AMSTA-AR-QAW-E, Picatinny Arsenal, NJ 07806-5000. Copies of this document may be purchased from The American Society of Mechanical Engineers (ASME), 22 Law Drive, P.O. Box 2900, Fairfield, NJ 07007-2900; http://www.asme.org.

Custodians:
Army — AR
Navy — SA
Air Force — 16
DLA — DH

Adopting Activity:
Army — AR

(Project DRPR — 0361)

Review Activities:
Army — AT, AV, CE, CR, EA, GL, MI, SM, TE
Navy — AS, CH, EC, MC, OS, SH, TD, YD
Air Force — 11, 13, 19, 68, 70, 71, 80, 84, 99
DLA — CC, GS, IS
NSA — NS

AMSC N/A AREA DRPR

DISTRIBUTION STATEMENT A. Approved for public release; distribution is unlimited.

Copyright ASME International
Provided by IHS under license with ASME
No reproduction or networking permitted without license from IHS
Not for Resale

The American Society of Mechanical Engineers

AN AMERICAN NATIONAL STANDARD

SCREW THREAD REPRESENTATION

ASME Y14.6-2001

[Revision and Consolidation of ANSI Y14.6-1978 (R1998) and ANSI Y14.6M-1981 (R1998)]

Copyright ASME International
Provided by IHS under license with ASME
No reproduction or networking permitted without license from IHS
Not for Resale

Date of Issuance: September 23, 2002

The next edition of this Standard is scheduled for publication in 2006. There will be no addenda or written interpretations of the requirements of this Standard issued to this edition.

ASME is the registered trademark of The American Society of Mechanical Engineers.

This code or standard was developed under procedures accredited as meeting the criteria for American National Standards. The Standards Committee that approved the code or standard was balanced to assure that individuals from competent and concerned interests have had an opportunity to participate. The proposed code or standard was made available for public review and comment that provides an opportunity for additional public input from industry, academia, regulatory agencies, and the public-at-large.

ASME does not "approve," "rate," or "endorse" any item, construction, proprietary device, or activity.

ASME does not take any position with respect to the validity of any patent rights asserted in connection with any items mentioned in this document, and does not undertake to insure anyone utilizing a standard against liability for infringement of any applicable letters patent, nor assume any such liability. Users of a code or standard are expressly advised that determination of the validity of any such patent rights, and the risk of infringement of such rights, is entirely their own responsibility.

Participation by federal agency representative(s) or person(s) affiliated with industry is not to be interpreted as government or industry endorsement of this code or standard.

ASME accepts responsibility for only those interpretations of this document issued in accordance with the established ASME procedures and policies, which precludes the issuance of interpretations by individuals.

No part of this document may be reproduced in any form,
in an electronic retrieval system or otherwise,
without the prior written permission of the publisher.

The American Society of Mechanical Engineers
Three Park Avenue, New York, NY 10016-5990

Copyright © 2002 by
THE AMERICAN SOCIETY OF MECHANICAL ENGINEERS
All Rights Reserved
Printed in U.S.A.

Copyright ASME International
Provided by IHS under license with ASME
No reproduction or networking permitted without license from IHS

Not for Resale

CONTENTS

Foreword v
Committee Roster vi

1 General 1
1.1 Scope 1
1.2 Application 1
1.3 Applicable Documents 1
1.4 Definitions 2

2 Thread Types 2
2.1 Straight Threads 2
2.2 Taper Threads 2
2.3 Acme Threads 2
2.4 Stub Acme Threads 2
2.5 Buttress Threads 2

3 Requirements 2
3.1 Thread Representation 2
3.2 Thread Specification 7
3.3 Dimensioning 15

Tables
1 Thread Series Designations 3
2 Designations for UN, UNJ, UNR, and N Thread Series 4

Figures
1 Simplified Representation of Threads 4
2 Schematic Representation of Threads 4
3 Detailed Representation of Threads 4
4 Simplified Representation of Assembled Threads 5
5 Multiple Thread Representations of Assembled Parts 5
6 Simplified Representation of Helical Coil Inserts 5
7 Simplified Representation of Taper Threaded Parts 5
8 Simplified Representation of Assembled Tapered Parts 5
9 Specifying Incomplete Thread Lengths 6
10 Specifying Shank and Incomplete Thread Lengths 6
11 Specifying Incomplete Thread Lengths and Shoulder Fillet Radius 6
12 Specifying Shank, Unthreaded, and Threaded Lengths and Undercut Diameter 6
13 Specifying Bottoming Relief Radii and Lengths 7
14 Detailed Representation of Helical Coil Inserts 7
15 Screw Thread Designation: Unified Inch Screw Thread, Right Hand 8
16 Screw Thread Designation: Metric External Thread, Right Hand 8
17 Screw Thread Designation: Metric Internal Thread, Right Hand 8
18 Acme Screw Thread Designation 13

Copyright ASME International
Provided by IHS under license with ASME
No reproduction or networking permitted without license from IHS
Not for Resale

19 Taper Thread Designation 14
20 Specifying External Taper Thread Type and Size 14
21 Specifying Internal Taper Thread Type and Size 14
22 Specifying External Taper Thread 14
23 Specifying External Thread With Special Gaging 15
24 Specifying Internal Taper Thread Designations 15
25 Specifying Internal Thread With Special Gaging 15
26 Specifying Tap Hole, Thread, and Special Gaging 15
27 Specifying Special Orifice, Standard Tap Hole, and Thread 15
28 Specifying Thread Length 16
29 Specifying External Chamfer 17
30 Specifying External Chamfer for Rolled Thread Blanks 17
31 Specifying Internal Thread Hole Depth, Size, and Countersink 17

Copyright ASME International
Provided by IHS under license with ASME
No reproduction or networking permitted without license from IHS
Not for Resale

FOREWORD

This Standard establishes American National Standard drafting practices for depicting screw threads on drawings and other documents. It is beyond the scope of this Standard to present engineering and manufacturing specifications for screw threads.

The original issue of this Standard was approved on December 13, 1957. It was designated ASA Y14.6-1957, and then redesignated ANSI Y14.6-1957 after the American Standards Association (ASA) became the American National Standards Institute (ANSI) in 1969. The 1957 document was revised and approved as an American National Standard on July 26, 1978. It was designated ANSI Y14.6-1978. A metric supplement was approved on September 21, 1981 and was designated ANSI Y14.6aM-1981.

This revision consolidates the metric supplement, Y14.6aM, and the basic Y14.6 Standard. It also updates these standards in accordance with the latest issues of ASME B1 series Screw Thread Standards, and provides corrections where necessary.

Suggestions for the improvement of this Standard will be welcome. They should be sent to The American Society of Mechanical Engineers, Attn: Secretary, Y14 Main Committee, Three Park Avenue, New York, NY 10016-5990.

This revision was approved as an American National Standard on November 2, 2001.

Copyright ASME International
Provided by IHS under license with ASME
No reproduction or networking permitted without license from IHS
Not for Resale

ASME STANDARDS COMMITTEE Y14
Engineering Drawing and Related Documentation Practices

(The following is the roster of the Committee at the time of approval of this Standard.)

OFFICERS

F. Bakos, Jr., *Chair*
K. E. Wiegandt, *Vice Chair*
C. J. Gomez, *Secretary*

COMMITTEE PERSONNEL

A. R. Anderson, Dimensional Control System, Inc.
J. B. Baker, Textron Automotive
F. Bakos, Jr., Eastman Kodak Co.
D. E. Bowerman, Copeland Corp.
J. V. Burleigh, The Boeing Co.
R. A. Chadderdon, Southwest Consultants
M. E. Curtis, Jr., Rexnord Corp.
D. E. Day, Monroe Community College
C. W. Ferguson, WM Education Services
L. W. Foster, L. W. Foster Associates, Inc.
C. J. Gomez, The American Society of Mechanical Engineers
B. A. Harding, Purdue University
K. S. King, Naval Surface Warfare Center, Dahlgren Division
A. Krulikowski, General Motors Powertrain
H. S. Lachut, ABB Combustion Engineering Inc.
J. G. Liska, Aerojet Propulsion, Division of Gencorp
P. J. McCuistion, Ohio University
P. E. McKim, Caterpillar, Inc.
E. Niemiec, MTD Products, Inc.
R. L. Nieukirk, *Alternate,* Caterpillar, Inc.
R. L. Rickman, Oklaloosa-Walton Community College
R. W. Stockdale, Consultant
R. P. Tremblay, U. S. Department of the Army, ARDEC
G. H. Whitmire, Gary Whitmire Associates
K. E. Wiegandt, Sandia National Laboratory
B. A. Wilson, The Boeing Co.
P. Wreede, Raytheon Systems Co.

SUBCOMMITTEE 6—SCREW THREAD REPRESENTATION

B. A. Harding, *Chair,* Purdue University
D. A. Clever, Deere and Co.
A. Herskovitz, Consultant
E. Schwartz, Consultant
G. H. Whitmire, Consultant

Copyright ASME International
Provided by IHS under license with ASME
No reproduction or networking permitted without license from IHS
Not for Resale

ENGINEERING DRAWING AND RELATED DOCUMENTATION PRACTICES

SCREW THREAD REPRESENTATION

1 GENERAL

1.1 Scope

This Standard establishes requirements for pictorial representation, specification, and dimensioning of screw threads on drawings; it is not concerned with standards for dimensional control of screw threads. Information helpful in the design and selection of screw threads to meet specific requirements is included in the B1 series of the ASME Standards for Screw Threads (see para. 1.3).

1.2 Application

Straight Unified inch (UN/UNR/UNJ form) and metric (M/MJ form) screw threads are emphasized in this Standard in consideration of their wide use and general purpose applications. The same drafting practices apply to straight and taper threads, Acme, Stub Acme, Buttress, thread insert, and interference fit threads except for differences noted.

1.3 Applicable Documents

The following documents form a part of this Standard to the extent specified herein. The latest edition shall apply.

AS 71051, Pipe Threads, Taper, Aeronautical National Form, Symbol ANPT, Design and Inspection Standard

Publisher: Society of Automotive Engineers (SAE), 400 Commonwealth Drive, Warrendale, PA 15096-0001

ASME B1.1, Unified Inch Screw Threads (UN and UNR Thread Form)
ASME B1.3M, Screw Thread Gaging Systems for Dimensional Acceptability-Inch and Metric Screw Threads (UN, UNR, M, and MJ)
ASME B1.5, Acme Screw Threads
ASME B1.7M, Nomenclature, Definitions, and Letter Symbols for Screw Threads
ASME B1.8, Stub Acme Screw Threads
ASME B1.9, Buttress Inch Screw Threads
ASME B1.10M, Unified Miniature Screw Threads
ASME B1.11, Microscope Objective Thread
ASME B1.12, Class 5 Interference-Fit Thread
ASME B1.13M, Metric Screw Threads — M Profile
ASME B1.15, Unified Inch Screw Threads (UNJ Thread Form)
ASME B1.20.1, Pipe Threads, General Purpose (Inch)
ASME B1.20.3, Dryseal Pipe Threads (Inch)
ASME B1.20.7, Hose Coupling Screw Threads (Inch)
ASME B1.21M, Metric Screw Threads: MJ Profile
ASME B18.29.1, Helical Coil Screw Thread Inserts (Inch Series)
ASME B18.29.2M, Helical Coil Screw Thread Inserts (Metric Series)
ASME Y14.5M, Dimensioning and Tolerancing

Publisher: The American Society of Mechanical Engineers (ASME International), Three Park Avenue, New York, NY 10016-5990; ASME Order Department: 22 Law Drive, Box 2300, Fairfield, NJ 07007-2300

CGA V-1, Compressed Gas Cylinder Valve Outlet and Inlet Connections

Publisher: Compressed Gas Association (CGA), 4221 Walney Road, Chantilly, VA 20151-2923

FED-STD-H28, Screw-Thread Standards for Federal Services
FED-STD-H28/2, Unified Inch Screw Threads — UN and UNR Thread Forms
FED-STD-H28/5, Unified Miniature Screw Threads
FED-STD-H28/7, Pipe Threads, General Purpose
FED-STD-H28/8, Dryseal Pipe Threads
FED-STD-H28/9, Gas Cylinder Valve Outlet and Inlet Threads
FED-STD-H28/10, Hose Coupling and Fire Hose Coupling Screw Threads
FED-STD-H28/12, Acme Threads
FED-STD-H28/13, Stub Acme Threads
FED-STD-H28/14, Buttress Screw Threads — 7°/45° Flank Angles
FED-STD-H28/16, Microscope Objective and Nosepiece Threads, 0.8000-36AMO

Copyright ASME International
Provided by IHS under license with ASME
No reproduction or networking permitted without license from IHS
Not for Resale

FED-STD-H28/21, Metric Screw-Threads
FED-STD-H28/23, Class 5 Interference-Fit Screw Threads
Publisher: Defense Printing Detachment Office, 700 Robbins Avenue, Building 4D, Philadelphia, PA 19111-5094.

1.4 Definitions

Definitions of terms are in accordance with ASME B1.7M and the applicable standard.

2 THREAD TYPES

2.1 Straight Threads

Straight 60 deg screw thread designations for drawings are based on ASME B1.1, ASME B1.15, ASME B1.13M, ASME B1.21M, and ASME B1.10M. Straight pipe thread standards are covered in the documents cited in para. 2.2.

2.2 Taper Threads

Taper pipe thread designations for drawings are based on ASME B1.20.1 (General Purpose) and ASME B1.20.3 (Dryseal).

NOTE: Pipe threads are designated in established trade sizes, which signify a nominal diameter only.

2.2.1 Taper Pipe Thread Features. General purpose pipe thread forms allow crest and root interference or clearance when the flanks contact. When a clearance occurs, unless filled with a lute or sealer, a spiral passage will exist through which leakage can occur. The dryseal pipe thread form does not allow such clearance, but rather has crest and root metal-to-metal contact or interference when the flanks contact. It is this feature that eliminates the need for a lute or sealer to provide for leak-proof assemblies.

2.2.2 General Purpose Taper Pipe Thread Series. General purpose taper pipe thread requirements are specified in ASME B1.20.1. Included are taper threads designated as NPT and NPTR. See Table 1 for designations and definitions.

NOTES:
(a) Straight pipe threads NPSC, NPSL, and NPSM are also included in ASME B1.20.1.
(b) Aeronautical taper pipe threads specified in MIL-P-7105 were designated ANPT. MIL-P-7105 is no longer active, but SAE AS 71051 replaces it.

2.2.3 Dryseal Pipe Thread Series. Dryseal pipe threads are specified in ASME B1.20.3. Included are taper dryseal pipe threads designated NPTF-1, NPTF-2, and PTF-SAE Short Series. See Table 1 for designations and definitions.

NOTE: Internal straight dryseal pipe threads NPSF and NPSI are also included in ASME B1.20.3.

2.3 Acme Threads

Acme screw thread drawing practices are based on ASME B1.5. Included are general purpose threads, where there is clearance on flanks and at major/minor diameters, and centralizing threads, where clearance at the major diameter is limited. See Table 1.

2.4 Stub Acme Threads

Stub Acme screw thread drawing practices are based on ASME B1.8. See Table 1.

2.5 Buttress Threads

Buttress screw thread drawing practices are based on ASME B1.9. The Buttress thread is designated "BUTT" for external thread pulls or "PUSH-BUTT" for external thread pushes. See Table 1.

3 REQUIREMENTS

Representation, specification, and dimensioning of threads shall be in accordance with the following paragraphs.

3.1 Thread Representation

Three methods in general use for representing screw threads on drawings are as follows: simplified in Fig. 1, schematic in Fig. 2, and detailed in Fig. 3. One method is generally used within any one drawing. When required, all three methods may be used. See Figs. 4 and 5.

3.1.1 Simplified Representation. The simplified drawing method is recommended for straight and tapered 60 deg form, Acme, Stub Acme, Buttress, helical coil insert, and other thread forms except where detailed representations are required. See para. 3.1.3 and Figs. 1, 6, 7, and 8.

3.1.1.1 Representation of the vanish (runout) thread should be indicated with the fully formed thread whether or not it is to be controlled. See Fig. 1. When essential to design requirements, the vanish thread

Copyright ASME International
Provided by IHS under license with ASME
No reproduction or networking permitted without license from IHS
Not for Resale

TABLE 1 THREAD SERIES DESIGNATIONS

Designation [Note (1)]	Thread Series	Reference	
		ASME	FED-STD-H28 Section
ACME C	Acme threads, centralizing	B1.5	/12
ACME G	Acme threads, general purpose (see also "STUB ACME")	B1.5	/12
AMO	Microscope objective threads	B1.11	/16
M	Metric threads: 1.6 mm and larger	B1.13M	/21
MJ	Metric threads, 0.15011*P* min. rounded root: 1.6 mm and larger	B1.21M	/21
BUTT	Buttress threads: pull	B1.9	/14
PUSH-BUTT	Buttress threads: push	B1.9	/14
N, NC, NF, NEF, NS	See Table 2		
NC-5	Interference-fit thread	B1.12	/23
	Gas Cylinder Valve Outlet and Inlet Threads:		
NGO [Note (1)]	Gas outlet threads	CGA V-1 [Note (2)]	/9
NGS	Gas straight threads		
NGT	Gas taper threads		
SGT	Special gas taper threads		
NH, NPSH, NHR	Hose coupling threads	B1.20.7	/10
NH	Fire-hose coupling threads		
	Pipe Threads (Except Dryseal):		
ANPT	Aeronautical National form taper pipe threads	AS71051 [Note (3)]	
NPSC	Straight pipe threads in pipe couplings	B1.20.1	/7
NPSL	Straight pipe threads for loose fitting mechanical joints with locknuts		
NPSM	Straight pipe threads for free-fitting mechanical joints for fixtures		
NPT	Taper pipe threads for general use		
NPTR	Taper pipe threads for railing joints		
	Dryseal Pipe Threads:		
F-PTF	Dryseal (fine) taper pipe threads	B1.20.3	/8
NPSF	Dryseal fuel internal straight pipe threads		
NPSI	Dryseal intermediate internal straight pipe threads		
NPTF	Dryseal taper pipe threads		
PTF-SAE, SHORT	Dryseal SAE short taper pipe threads		
PTF-SPL, SHORT	Dryseal special short taper pipe threads		
PTF-SPL, EXTRA SHORT	Dryseal special extra short taper pipe threads		
SPL.-PTF	Dryseal special taper pipe threads		
SGT	Special gas taper threads	CGA V-1 [Note (2)]	/9
STI	Helical coil inserts (inch)	B18.29.1	. . .
	Helical coil inserts (metric)	B18.29.2M	. . .
STUB ACME	Stub Acme threads	B1.8	/13
UN series	See Table 2 (0.06 in. and larger)	B1.1	/2
UNJ series	See Table 2 (0.06 in. and larger)	B1.15	/4
UNM	Unified Miniature thread series [0.055 in. (1.4 mm) and smaller]	B1.10	/5
UNR series	See Table 2	B1.1	/2

NOTES:
(1) All threads, except NGO, are right hand unless otherwise designated. For NGO threads, designations "RH" or "LH" are required.
(2) Compressed Gas Association
(3) Society of Automotive Engineers

Copyright ASME International
Provided by IHS under license with ASME
No reproduction or networking permitted without license from IHS Not for Resale

TABLE 2 DESIGNATIONS FOR UN, UNJ, UNR, AND N THREAD SERIES

Basic Thread Series	External Thread Root	Constant Pitch	Coarse	Fine	Extra Fine	Special Diameter/ Pitch	Reference	
							ASME	FED-STD-H28 Section
UN	With optional radius root on external thread	UN	UNC	UNF	UNEF	UNS	B1.1	/2
UNJ	With 0.15011*P* min. mandatory radius root on external thread	UNJ	UNJC	UNJF	UNJEF	UNJS	B1.15	/4
N [Note (1)]	...	N	NC	NF	NEF	NS	...	/2
UNR	With 0.10825*P* min. radius root on external thread	UNR	UNRC	UNRF	UNREF	UNRS	B1.1	/2

NOTE:
(1) This series is superseded by the UN series.

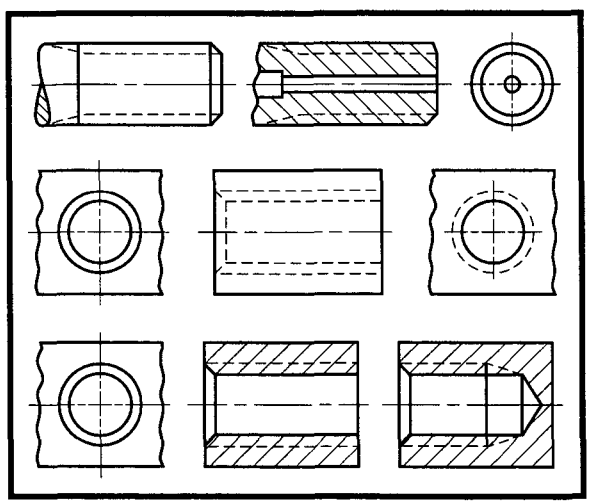

FIG. 1 SIMPLIFIED REPRESENTATION OF THREADS

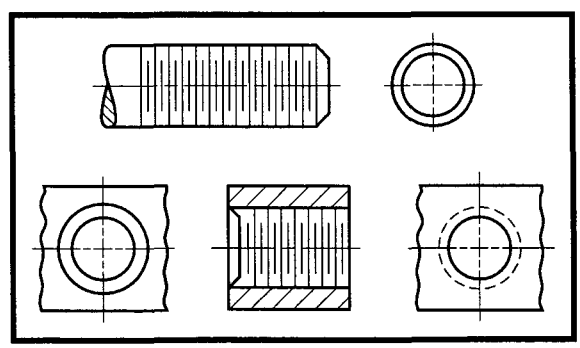

FIG. 2 SCHEMATIC REPRESENTATION OF THREADS

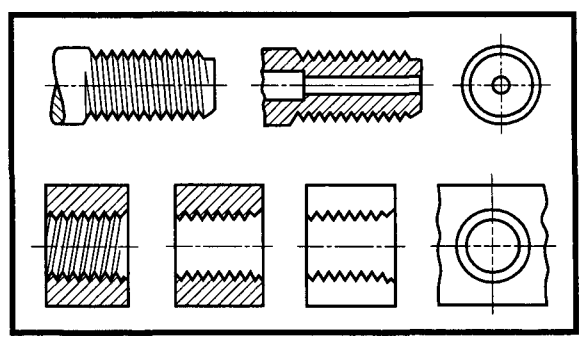

FIG. 3 DETAILED REPRESENTATION OF THREADS

should be dimensioned. See para. 3.3. and Figs. 9 through 13.

3.1.1.2 The taper thread is shown in the same manner as the straight thread except that the lines form an angle of approximately 3 deg with the axis. See Figs. 7 and 8.

3.1.2 Schematic Representation. Schematic representation is nearly as effective as the detailed representation and is much easier to draw. The staggered lines, symbolic of the thread roots and crests, shall be perpendicular to the axis of the thread. This method

Copyright ASME International
Provided by IHS under license with ASME
No reproduction or networking permitted without license from IHS
Not for Resale

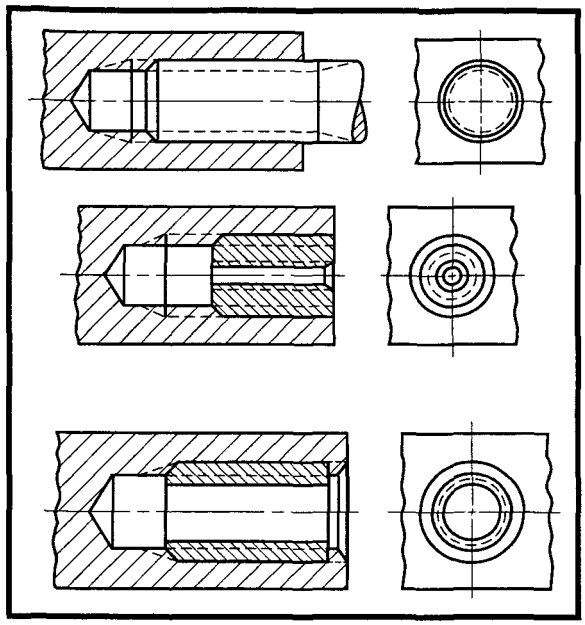

FIG. 4 SIMPLIFIED REPRESENTATION OF ASSEMBLED THREADS

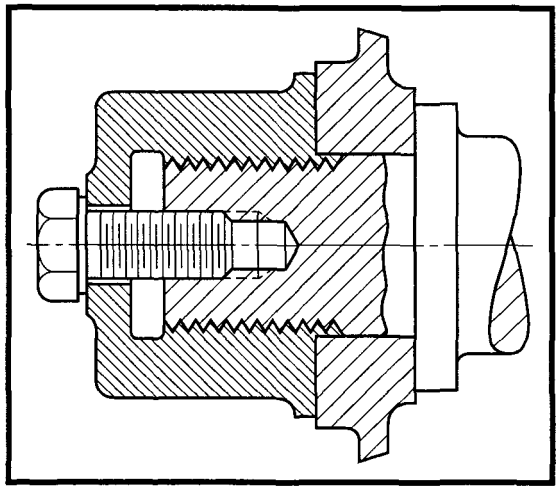

FIG. 5 MULTIPLE THREAD REPRESENTATIONS OF ASSEMBLED PARTS

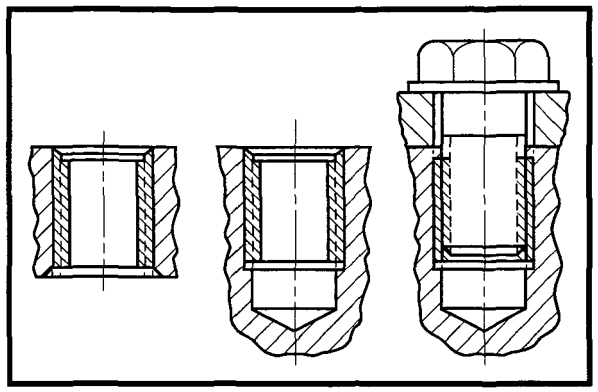

FIG. 6 SIMPLIFIED REPRESENTATION OF HELICAL COIL INSERTS

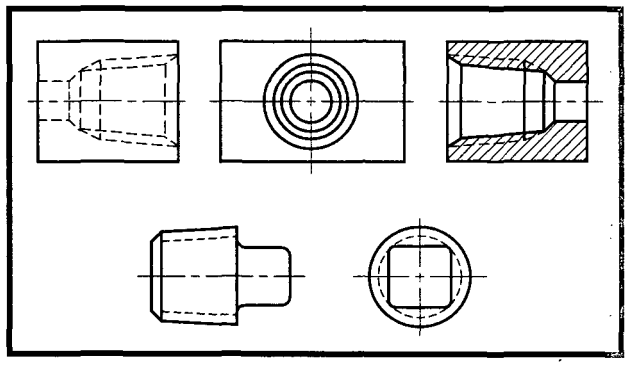

FIG. 7 SIMPLIFIED REPRESENTATION OF TAPER THREADED PARTS

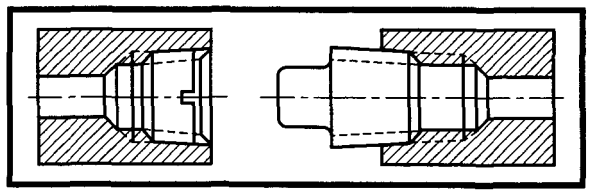

FIG. 8 SIMPLIFIED REPRESENTATION OF ASSEMBLED TAPERED PARTS

should not be used for hidden internal threads or sections of external threads. See Fig. 2.

3.1.3 Detailed Representation. Detailed representation is a close approximation of a visible or sectional view of the actual appearance of a screw thread. The form of the thread is simplified by showing the normal helices as straight, slanting lines and the truncated crests and roots as sharp "V's." While the detailed rendering is comparatively difficult and time consuming, its use is sometimes justified where confusion might result from a less realistic thread representation. See Figs. 3 and 14. Detailed representation is used to show the elements of a new form or modified screw thread, especially for dimensioning in enlarged views, layouts, and assemblies.

Copyright ASME International
Provided by IHS under license with ASME
No reproduction or networking permitted without license from IHS Not for Resale

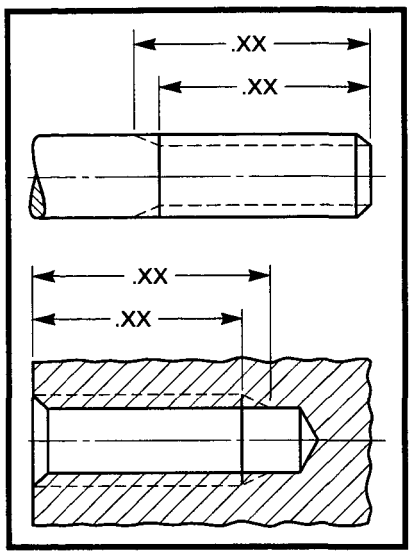

FIG. 9 SPECIFYING INCOMPLETE THREAD LENGTHS

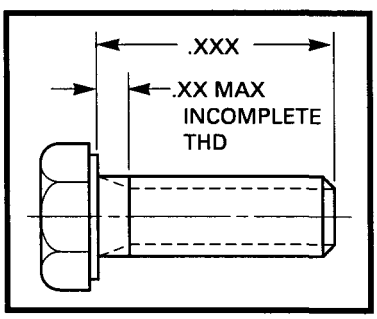

FIG. 10 SPECIFYING SHANK AND INCOMPLETE THREAD LENGTHS

3.1.4 Thread Element Representation. Certain drawing practices may be used to define required thread elements as follows:

3.1.4.1 On end views of external threads with a chamfer, where chamfer and minor diameter are very close to being the same, the minor diameter of a thread may be eliminated to improve clarity. See Fig. 1.

3.1.4.2 On end views of countersunk threaded holes where countersunk diameters and the major diameters of threads are close to being the same, the major diameter may be eliminated for clarity. See Figs. 1 through 3.

3.1.4.3 Threads may be shown in more detail in enlarged views, checking layouts, and assemblies for clarity. See Figs. 5 and 13.

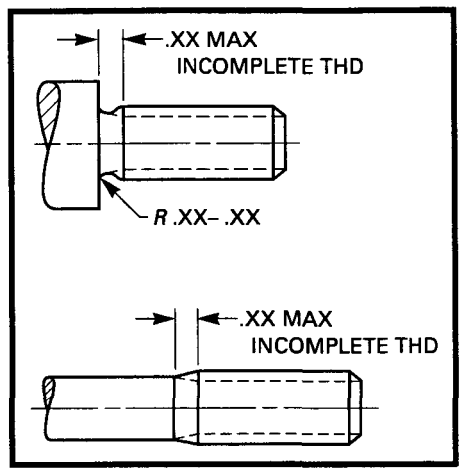

FIG. 11 SPECIFYING INCOMPLETE THREAD LENGTHS AND SHOULDER FILLET RADIUS

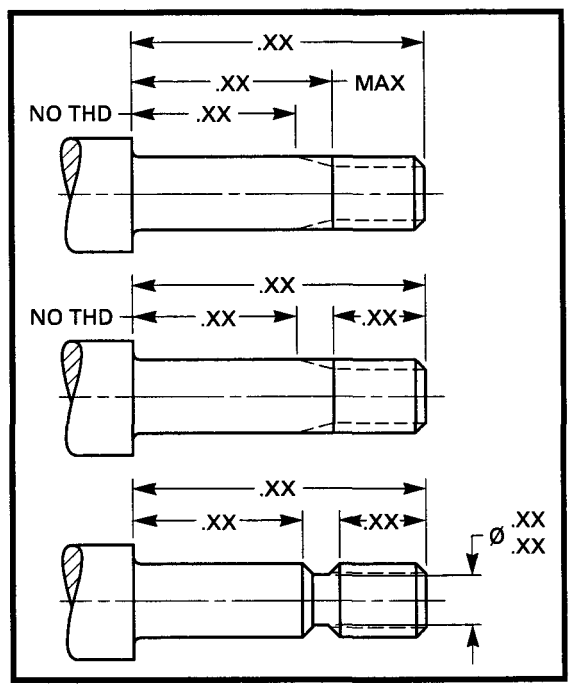

FIG. 12 SPECIFYING SHANK, UNTHREADED, AND THREADED LENGTHS AND UNDERCUT DIAMETER

3.1.4.4 See para. 3.3 for dimensioning special and modified threads.

3.1.5 Assembled Thread Representation. It is recommended that assembled straight and tapered thread components be shown by the simplified method. See Fig. 4; however, where improved clarity in a representa-

Copyright ASME International
Provided by IHS under license with ASME
No reproduction or networking permitted without license from IHS
Not for Resale

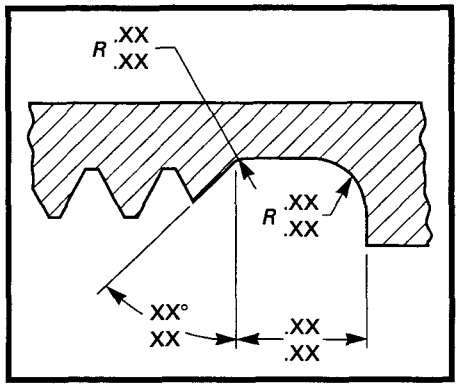

FIG. 13 SPECIFYING BOTTOMING RELIEF RADII AND LENGTHS

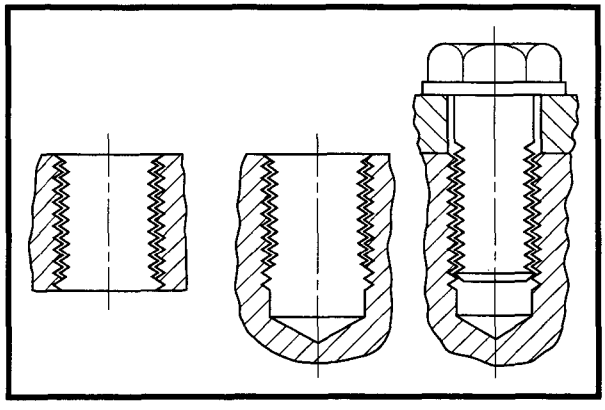

FIG. 14 DETAILED REPRESENTATION OF HELICAL COIL INSERTS

tion is required, all three conventions may be used on a single drawing. See Fig. 5.

3.2 Thread Specification

In the U.S. the name and number of the controlling thread standard is frequently omitted from the drawing. Reference is made instead to the designation symbols of the standard, such as series symbols and class symbols. To avoid misunderstanding, it is recommended that the controlling organization and thread standard be specified or otherwise referenced on the drawing. Examples follow:

¼-20 UNC-2A, ASME B1.1
.250–28 UNJF-3B, ASME B1.15
M6x1-5H6H (21), ASME B1.13M

3.2.1 On drawings with threaded parts, for standard series screw threads, the designation of the screw thread is noted and optionally supplemented by the pitch diameter and its tolerance, or pitch diameter limits.

3.2.1.1 For 60 deg inch threads, the thread designation should include, in sequence, the nominal diameter in inches, the number of threads per inch, the letter symbol of the thread series, the number and letter of the thread class, and any qualifying information. For multiple start threads, replace the number of threads per inch with pitch in inches (*P*), lead in inches (*L*), and the number of starts in parentheses. An alternate designation method for multiple start threads retains the number of threads (pitches) per inch and adds lead in inches (*L*) and number of starts in parentheses following it.

For 60 deg metric threads, the thread designation should include in sequence, the metric thread/form identifier (M or MJ), the nominal diameter in millimeters, a lowercase "x," the pitch in millimeters [or for multiple start threads, *L* (lead in millimeters), *P* (pitch in millimeters), and number of starts in parentheses], pitch diameter tolerance symbol, crest diameter tolerance symbol (if different from that of the pitch diameter), and any qualifying information.

The thread length, the hole size, and the chamfer or countersink may be included in the note or dimensioned on the drawing of the part. Thread gaging system may be added to the thread designation in parentheses, or otherwise included in a drawing note. Acceptability of screw threads shown on a drawing shall be in accordance with the designated system, in accordance with ASME B1.3M.

3.2.1.2 In general practice, the general designation and any diameter limits are in note form and referred to the drawing of the thread with a leader line. Figures 15 through 17 illustrate and explain the elements of designation of screw threads.

NOTES (for metric thread designations):

(a) When transmitting a thread designation, where only capital letters are available, the external or internal thread may need further identification. Thus, the tolerance class identification is followed by the abbreviations EXT or INT in capital letters (e.g., M6X1-4G6G EXT or M6X1-6H INT).

(b) When indicating fit between threads, specify in the thread designation, the internal and external thread classes separated by a slash (e.g., MJ6x1-4H5H/4h6h).

(c) Where the pitch and crest diameter tolerance symbols are identical, the symbol need only be given once (e.g., M20x2.5-6H, with "6H" representing the pitch and minor diameter tolerance class symbols).

Copyright ASME International
Provided by IHS under license with ASME
No reproduction or networking permitted without license from IHS
Not for Resale

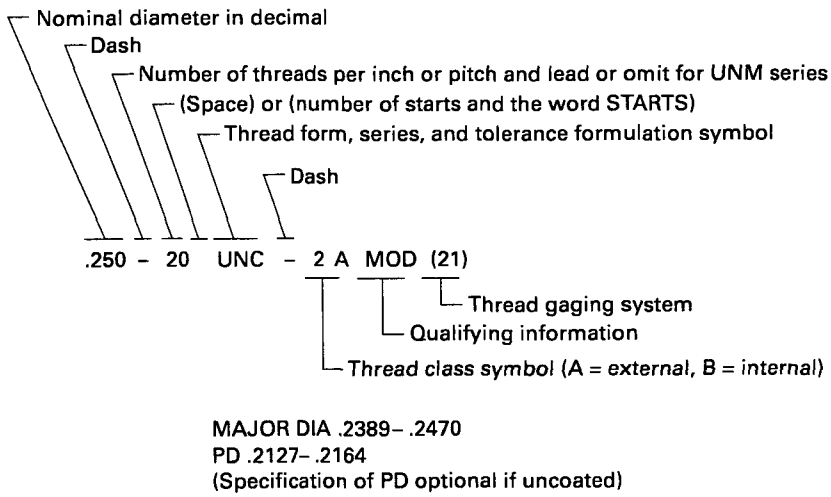

FIG. 15 SCREW THREAD DESIGNATION: UNIFIED INCH SCREW THREAD, RIGHT HAND

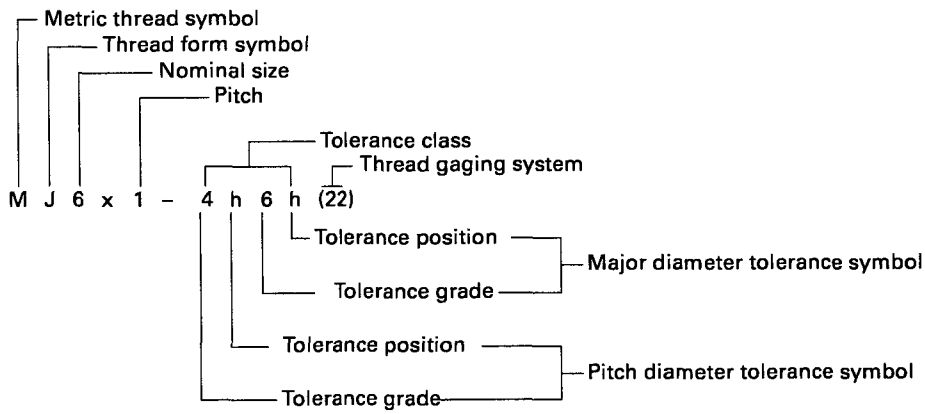

FIG. 16 SCREW THREAD DESIGNATION: METRIC EXTERNAL THREAD, RIGHT HAND

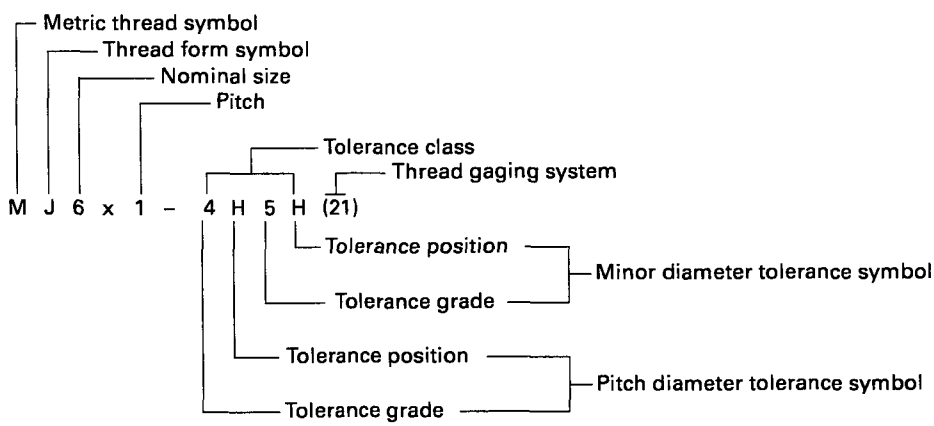

FIG. 17 SCREW THREAD DESIGNATION: METRIC INTERNAL THREAD, RIGHT HAND

Copyright ASME International
Provided by IHS under license with ASME
No reproduction or networking permitted without license from IHS
Not for Resale

3.2.1.3 The nominal thread size is the basic major diameter and is specified as the fractional diameter, screw number, or its decimal equivalent. Where decimal equivalents are used for size callout, they shall be shown in four-place decimals (omitting zero in the fourth place) for fractional sizes, and in three-place decimals for number sizes. Examples are as follows:

1.000-8 UNC-2A
.5625–20 UNS-2A
1¼-8 UN-2A

Numbered sizes may be shown because of established practices. The decimal equivalent, to three decimal places, should be shown in parentheses. Examples are as follows:

or No. 10 (.190)-32 UNF-2A

or 10 (.190)-32 UNF-2A

.190-32 UNF-2A

Nominal metric size or pitch should include zero before the decimal of values less than 1, and should not include any zeros beyond the last numbered decimal places (e.g., M8x1.5 or MJ2.5x0.45).

3.2.1.4 The series symbols and the class symbols identify the controlling thread standard and define the details of thread design, dimensions, and tolerances not specifically covered on the drawing. Series, class, and dimensional letters in a thread designation have the significance shown in Tables 1 and 2 as follows:

A	External, American, Aeronautical
B	Internal
C	Coupling, Coarse, or Centralizing
Cl	Chlorine
EXT	External
EF	Extra fine
F	Fine, Fuel, and Oil
FL	Flat root thread
G	General purpose, Gas, Allowance after coating
H	Hose
I	Intermediate
INT	Internal
J	Controlled radius root
L	Lead, Locknut
LE	Length of engagement
LH	Left hand (absence of LH indicates RH)
M	Metric, Mechanical, Microscope, Miniature
MOD	Modified
N	National
O	Outlet, Objective
P	Pipe, Pitch
R	Railing, Rounded root radius
RH	Right hand
S	Straight
SE	Special engagement
SPL	Special
T	Taper
UN	Unified

3.2.1.5 The method of thread fabrication is normally not stated on the drawing, but may be controlled by a specification referenced on a drawing. Otherwise, where a particular processing is required, it should be covered by a separate note. See subparas. 3.2.2(k) through (n).

3.2.1.6 If required, thread chamfers or countersinks should also be specified on the drawing. Further detail concerning hole size, chamfers, and countersinks is covered under dimensioning of screw threads. See para. 3.3.

3.2.1.7 The hole size of internal threads before tapping is limited by the maximum and minimum minor diameters specified in the controlling thread standard. It is frequently advisable, however, for engineering or production reasons to restrict the hole size to a limited range of the tolerance afforded by the minor diameter limits. In such instances, the threads shall be considered as modified, and the hole size limits should be specified on the drawing. For such cases it is not necessary to include "Modified" (MOD) after the designation. Example follows:

Ø .161–.164 BEFORE THD
.190-32 UNF-2B

NOTE: Standard minor diameter is normally .156–.164

3.2.2 60 Deg Inch Screw Thread Designations. See ASME B1.1 and ASME B1.15 for details and additional guidelines required for selection and designations. Examples follow:

(a) Standard Unified Screw Thread, Gaging System 21

.250-20 UNC-2A (21)

or

¼-20 UNC-2A (21)

Copyright ASME International
Provided by IHS under license with ASME
No reproduction or networking permitted without license from IHS
Not for Resale

(b) Standard Unified UNJ Form Screw Thread, Gaging System 22

.250-28 UNJF-3B (22)

(c) Standard Unified Screw Thread, Gaging System 21, Left Hand

$\frac{1}{2}$-13 UNC-2A-LH (21)

(d) UNS Special Diameter/Pitch Unified Screw Thread, Gaging System 22

$\frac{1}{4}$-24 UNS-3A (22)
MAJOR DIA .2428–.2500
PD .2201–.2229
MINOR DIA .205 MAX

.495-20 UNS-3A (22)
MAJOR DIA .4869–.4950
PD .4593–.4625
MINOR DIA .441 MAX

(e) UNJS Special Diameter/Pitch Screw Thread, Gaging System 22

.280-28 UNJS-3A (22)
MAJOR DIA .2735–.2800
PD .2542–.2568
MINOR DIA .2340–.2388
ROOT RAD .0054–.0064

(f) Standard Unified Multiple Start Thread, Gaging System 21

.750–.0625*P*–.1875*L*(3 STARTS)UNF-2A(21)

or

$\frac{3}{4}$-16–.1875*L*(3 STARTS)UNF-2A(21)

(g) SE, Special Engagement Unified Thread With Adjusted Pitch Diameter Limits, Gaging System 23. LE is adjusted to two decimal places for use in determining GO gage length.

$\frac{1}{2}$-13 UNC-SE2A (23)
PD .4423–.4485
LE 1.00

(h) Long Length of Engagement Unified Thread With Adjusted Pitch Diameter Limits, Added Allowance, and Use of a Standard LG, Length of GO Gage, Gaging System 22

.5058-13 UNS-2B (22)
MINOR DIA .423–.440
PD .4458–.4623
LG STD

(i) Long Length of Engagement Unified Thread With Standard Diameter Limits and Use of a Special LG, Length of GO Gage, Gaging System 21

.500-20 UNF-3A SPL (21)
LG 1.00 SPL

(j) Unified Screw Thread With Modified Thread Crests, Gaging System 21

$\frac{3}{8}$-24 UNF-3A MOD (21)
MAJOR DIA .3648–.3720 MOD

$1\frac{1}{2}$-10 UNS-3B MOD (21)
MINOR DIA 1.398–1.409 MOD
PD 1.4350–1.4412
MAJOR DIA 1.500 MIN

(k) Coated Unified Screw Thread Where Specified Standard Class 2A Sizes are to be Held Before Coating and Allowance is to Accommodate Coating (Default Condition). Sizes after coating should be specified, but it is optional to specify the before coating sizes. Gaging System 21 is used in the example.

.750-10 UNC-2A (21)
MAJOR DIA .7500 MAX
PD .6850 MAX
} AFTER COATING

MAJOR DIA .7353–.7482
PD .6773–.6832
} BEFORE COATING (NOTE: Specification of BEFORE COATING dimensions is optional.)

(l) Coated Unified Screw Thread Where Specified Standard Class 1A or 3A Sizes are to be Held After Coating and There is no Allowance to Accommodate Coating (Default Condition). Sizes before coating should be specified and noted as SPL. Gaging System 21 is used in the example.

Copyright ASME International
Provided by IHS under license with ASME
No reproduction or networking permitted without license from IHS
Not for Resale

.250-28 UNF-3A (21)
MAJOR DIA .2500 MAX
PD .2268 MAX
AFTER COATING
(NOTE: Specification of AFTER COATING dimensions is optional.)

MAJOR DIA .2431–.2494 SPL
PD .2235–.2256 SPL
BEFORE COATING

(m) Coated Unified Screw Thread Where Specified Standard Class 2A Sizes are to be Held After Coating With the Allowance Not Used to Accommodate Coating

.750-10 UNC-2A (21) AFTER COATING

or

.750-10 UNC-2AG (21)
MAJOR DIA .7335–.7464 SPL
PD .6755–.6814 SPL
BEFORE COATING

MAJOR DIA .7482 MAX
PD .6832 MAX
AFTER COATING

(n) Coated Unified Internal Screw Thread Where Specified Standard Sizes are to be Held After Coating, but an Allowance is Needed to Accommodate Coating. Sizes before coating should be specified and noted as SPL. Gaging System 21 is used in the example.

1/4-20 UNC-1B (21)
MINOR DIA .196 MIN
PD .2175 MIN
AFTER COATING
(NOTE: Specification of AFTER COATING dimensions is optional.)

MINOR DIA .197–.207 SPL
PD .2187–.2256 SPL
BEFORE COATING

(o) Unified Form Threads With Nonstandard Tolerances, Designated as Unified Form SPL

7/16-24 UNIFIED FORM SPL-EXT (22)
MAJOR DIA .4280–.4340 SPL
PD .4025–.4065 SPL
MINOR DIA .3889 MAX
LE .38

1/2-13 UNIFIED FORM SPL-INT (22)
MINOR DIA .424–.434 SPL
PD .4500–.4580 SPL
MAJOR DIA .5000 MIN
LE .50

(p) Special Form Threads Where Form Varies From the Unified Form

7/8-24 SPL 60° FORM-EXT (22)
MAJOR DIA .8668–.8750
PD .8343–.8384
MINOR DIA .8068 MAX
LE .69

(q) Unified Inch External Screw Threads With Roots Rounded to a Root Radius of 0.108 x Pitch (Min.). The thread Unified series symbol shall be qualified by addition of the letter "R" immediately following the thread form symbol UN.

.250-20 UNRC-2A (22)
[PD .2127–.2164 (Optional if uncoated)]

3.2.3 60 Deg Metric Screw Thread Designations. See ASME B1.13M and ASME B1.21M for details and additional guidelines required for selection and designations. Examples follow:

(a) Standard Metric M Screw Thread, Gaging System 21

M10x1.5-4g6g(21)

(b) Standard Metric MJ Screw Thread, Gaging System 22

MJ6x1-4h6h(22)

(c) Standard Metric M Screw Thread, Gaging System 21, Left Hand

M6x1-6H-LH(21)

(d) Special Diameter/Pitch Metric Screw Thread, Gaging System 22

MJS6.5x1-4h6h(22)
MAJOR DIA 6.320–6.500
PD 5.779–5.850
MINOR DIA 5.213–5.345
ROOT RAD 0.150–0.180

Copyright ASME International
Provided by IHS under license with ASME
No reproduction or networking permitted without license from IHS
Not for Resale

M5x0.9-6g-SPL(22)
MAJOR DIA 4.810–4.975
PD 4.289–4.390
MINOR DIA 4.001 MAX

(e) Special Rounded Root Thread With Minimum Radius of 0.63 mm

M42x4.5-6g-R0.63

(f) Standard Metric M Multiple Start Thread, Gaging System 21

M16xL4P2(2 STARTS)-6g(21)

(g) For metric M threads defined as Short or Long length of engagement, thread class is adjusted in accordance with ASME B1.13M.

For metric MJ threads, SE, special engagement thread with adjusted pitch diameter limits is specified. Gaging System 22 is used in the example. LE is specified for use in determining GO gage length.

MJ6x1-4h6h SE (22)
PD 5.256–5.350
LE 18

(h) Long Length of Engagement Metric MJ Thread With Standard Diameter Limits, and Use of a Special LG, Length of GO Gage, Gaging System 22

MJ8x1.25-4H5H SPL (22)
LG 16

(i) Metric MJ Screw Thread With Modified Thread Crests, Gaging System 21

(1) External Thread, Reduced Major Diameter

MJ6x1-4h6h MOD(21)
MAJOR DIA 5.745–5.925 MOD

(2) Internal Thread, Increased Minor Diameter

MJ6x1-4H5H MOD(21)
MINOR DIA 5.101–5.291 MOD

(j) For a Coated Metric M or MJ Profile Screw Thread Where There is a Specified Standard Allowance. For example, for tolerance position G/g, sizes are to be held before coating, and allowance is to accommodate coating (default condition). After coating, the maximum material limits shall not exceed basic size, tolerance position H/h, limits. If the designated tolerance class must be maintained after coating, this shall be noted in the callout.

M6x1-6g(21) AFTER COATING

(k) For a Coated Metric M or MJ Profile Screw Thread With Tolerance Position H/h There is no Allowance for Coating. Where the tolerance position, G/g, does not provide sufficient allowance, specify maximum and minimum limits of size for minor and pitch diameters of internal threads or major and pitch diameters of external threads before coating.

M6x1-4h6h AFTER COATING
MAJOR DIA 5.780–5.940
PD 5.239–5.290
} BEFORE COATING

3.2.4 Designation of Unified Miniature Screw Threads (UNM). See ASME B1.10M for details and additional guidelines required for selection and designations. Thread sizes are designated by their nominal diameter in millimeters, to two decimal places, followed by the symbol "UNM." If modifications to the standard size limits are required, they shall be added to the designation. An example follows:

0.80 UNM

3.2.5 Designation of Acme Thread. In designating Acme threads, the designation should cover, in sequence, the nominal size, the number of threads per inch (or the pitch and lead for multiple start threads), the thread form symbol, the thread class number and type symbol, "G" for General Purpose or "C" for Centralizing thread, and any other qualifying information. If not obvious from the position of the leader arrow, "EXT" must be added for external threads and "INT" for internal threads.

3.2.5.1 Generally, the designation is in note form and referenced to the drawing of the thread with a leader. The thread, the hole size, and the chamfer or countersink may be included in the note or dimensioned on the drawing. Thread gaging system may be added to the thread designation in parentheses, or otherwise included in a drawing note. Figure 18 illustrates and explains the designation of Acme screw threads.

3.2.5.2 Acme Screw Thread Designations. See ASME B1.5 for details and additional guidelines

Copyright ASME International
Provided by IHS under license with ASME
No reproduction or networking permitted without license from IHS
Not for Resale

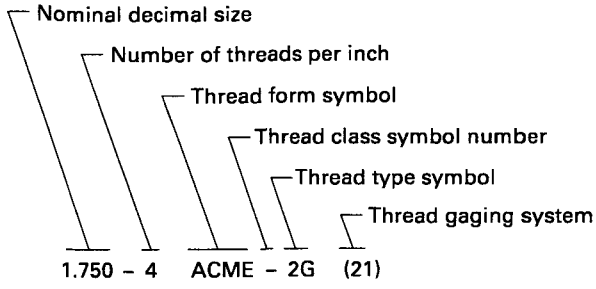

FIG. 18 ACME SCREW THREAD DESIGNATION

required for selection and designations. Examples follow:

(a) Acme Screw General Purpose Thread, Left Hand, Gaging System 21

1.750-4-ACME-2G-LH(21)

(b) Acme Multiple Start (Two Start) Centralizing Thread, Gaging System 22

2.875-.4P-.8L-ACME-4C(22)

or

2.875-.4P-.8L-(2 START)-ACME-4C(22)

(c) Special Acme Screw Threads (Acme Tolerance Formulation), General Purpose, Internal, Length of Engagement Less Than Two Nominal Diameters, Gaging System 22

.500-16-ACME-3G-SPL(22)INT
MAJOR DIA .5100–.5200
PD .4688–.4743
MINOR DIA .4375–.4425

(d) Special Acme Screw Threads (Acme Tolerance Formulation), General Purpose, External, Length of Engagement Greater Than Two Nominal Diameters, Gaging System 22

.500-16-ACME-3G-SPL(22)EXT
MAJOR DIA .4950–.5000
PD .4586–.4641
MINOR DIA .4193–.4275
LE 1.50

3.2.6 Designation of Stub Acme Threads. Stub Acme threads are designated in a manner similar to Acme threads (see para. 3.2.5); however, Stub Acme threads have only one class, which corresponds to Acme Class 2G in ASME B1.5. Thus, unless a class other than 2G is required, there is no thread class symbol in the designation. The modified form symbol should follow the thread forms and series symbol where applicable. See ASME B1.8 for details and additional guidelines required for selection and designations. Examples follow:

(a) Standard Stub Acme Thread, Gaging System 21

.500-10 STUB ACME (21)

(b) Multiple Start (Two Starts) Stub Acme Thread, With Acme Tolerance Class 3G, Left Hand Thread, Gaging System 21

1.750-.250P-.5L-STUB ACME-3G-LH(21)

(c) Modified Form One Stub Acme Screw Thread

.625-8 STUB ACME-MOD 1

(d) Modified Form Two Stub Acme Screw Thread

.625-8 STUB ACME-MOD 2

3.2.7 Designation of Buttress Threads. See ASME B1.9 for details and additional guidelines required for selection and designations.

3.2.7.1 When only the designation "BUTT" is used, the thread is a *pull* type Buttress with the clearance flank (45 deg) leading and the pressure flank (7 deg) following. When the designation "PUSH-BUTT" is used, the thread is a *push* type Buttress with the load flank (7 deg) leading and the clearance flank following. Whenever possible, the designation should be confirmed by a view on the drawing of the product that has the Buttress thread.

3.2.7.2 In thread designations on drawings and in specifications, the following are to be used:

BUTT = Buttress thread, pull type
PUSH-BUTT = Buttress thread, push type
SPL = special
FL = flat root thread

Examples follow:

2.500-8 BUTT-2A

2.500-8 BUTT-2A-LH-FL

2.500-8 PUSH-BUTT-2A
(Buttress form of push type thread)

Copyright ASME International
Provided by IHS under license with ASME
No reproduction or networking permitted without license from IHS
Not for Resale

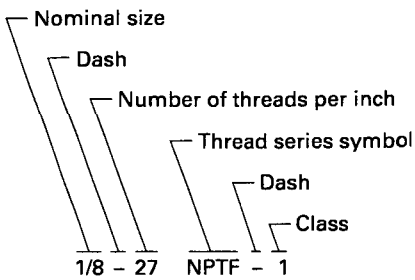

FIG. 19 TAPER THREAD DESIGNATION

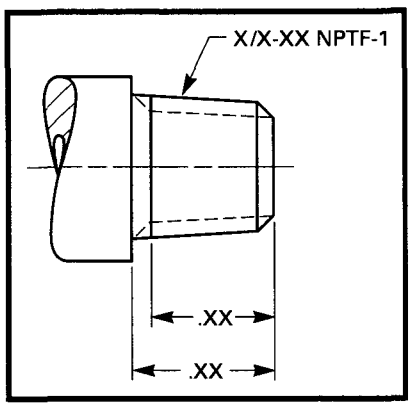

FIG. 20 SPECIFYING EXTERNAL TAPER THREAD TYPE AND SIZE

3.2.8 Designation of Taper Threads. On drawings of taper threaded parts, the designation of the thread, the hole size and depth, the chamfer or countersink, and the length of minimum full or effective thread are specified.

3.2.8.1 The designation should cover in sequence the nominal size in fractional inches (a decimal equivalent may be used only when the computer or other machine cannot handle fractions), the number of threads per inch, the thread series symbol, and the thread class (if applicable). See Fig. 19.

3.2.8.2 In general practice the hole size, designation, and a gaging note, if desired, are specified in note form and referenced to the drawing of the thread with a leader line. The length of minimum full thread and the chamfer or countersink may be included in the note or dimensioned on the drawing of the part. See Figs. 20 and 21.

3.2.9 Designation of External Taper Pipe Threads. Standard external taper pipe threads should be specified as shown in Fig. 22.

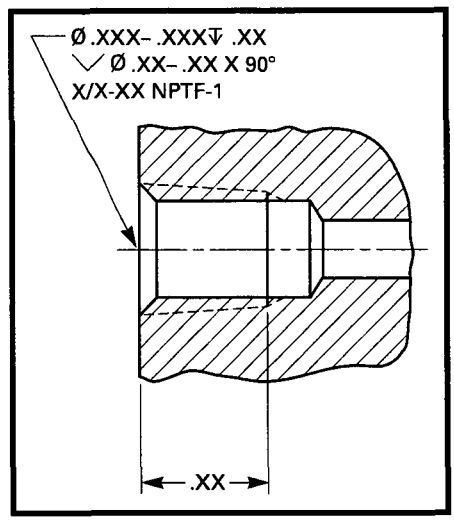

FIG. 21 SPECIFYING INTERNAL TAPER THREAD TYPE AND SIZE

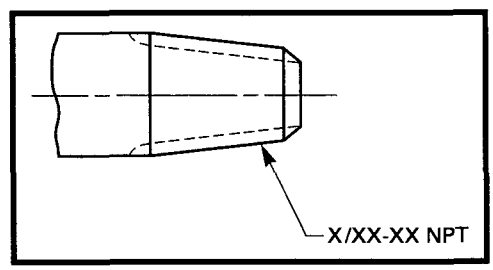

FIG. 22 SPECIFYING EXTERNAL TAPER THREAD

3.2.9.1 Where a special external thread is required having less than standard engagement in a standard internal thread, the thread should be designated as shown in Fig. 23.

3.2.10 Designation of Internal Taper Threads. Standard internal taper threads should be specified as shown in Fig. 24.

3.2.10.1 Where a special internal thread is required having less than standard engagement over a standard external thread, the thread should be specified as shown in Fig. 25.

3.2.10.2 When a pipe plug with standard thread is to be installed so that the end of the plug is flush with or below the surface, the thread gaging plane should be depressed a sufficient amount below the surface. This should be specified as shown in Fig. 26.

3.2.10.3 When the orifice hole diameter is smaller than the tap hole diameter, the thread should be specified

Copyright ASME International
Provided by IHS under license with ASME
No reproduction or networking permitted without license from IHS
Not for Resale

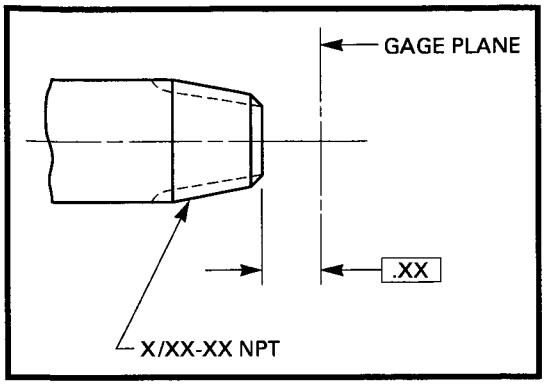

FIG. 23 SPECIFYING EXTERNAL THREAD WITH SPECIAL GAGING

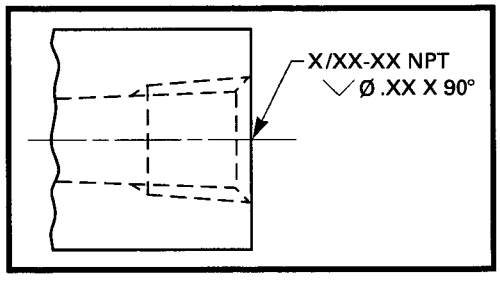

FIG. 24 SPECIFYING INTERNAL TAPER THREAD DESIGNATIONS

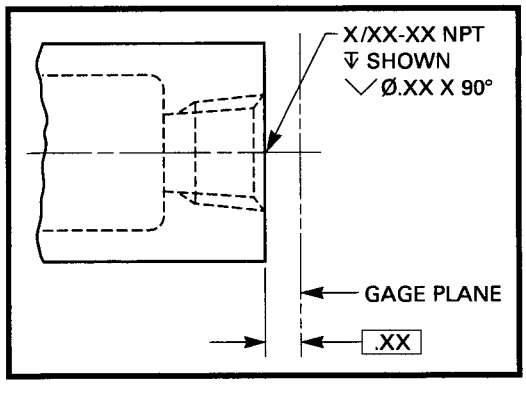

FIG. 25 SPECIFYING INTERNAL THREAD WITH SPECIAL GAGING

as shown in Fig. 27. When the orifice hole diameter is smaller than the tap hole diameter and the design necessitates a shortened tap, this may be specified by the addition of "SHORTENED TAP REQD" to the thread callout.

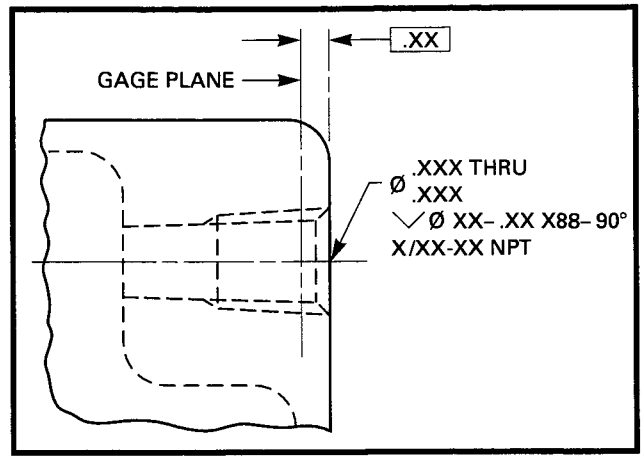

FIG. 26 SPECIFYING TAP HOLE, THREAD, AND SPECIAL GAGING

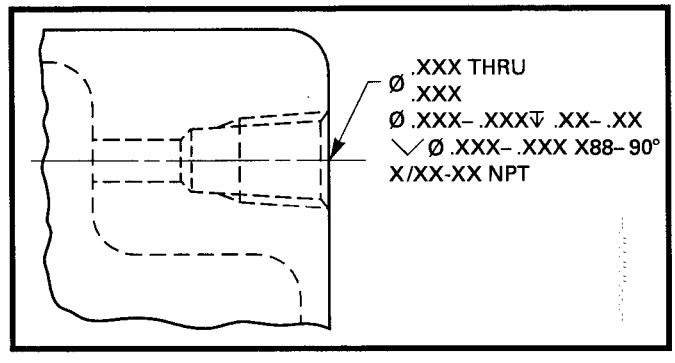

FIG. 27 SPECIFYING SPECIAL ORIFICE, STANDARD TAP HOLE, AND THREAD

3.2.11 Designation of Coated or Plated Taper Threads. In taper thread notes for coated or plated threads that do not have an allowance, the designation may optionally be followed by the words "AFTER PLATING." If desired in thread notes for plated taper threads, the gage limits before plating may be given followed by the words "BEFORE PLATING." This should be followed by the standard gage limits after plating and the words "AFTER PLATING." See ASME B1.20.1 and ASME B1.20.3 for details and additional guidelines required for selection and designations.

3.3 Dimensioning

In addition to the drawing practices for representation and designation of screw threads, ASME Y14.5M should be used in dimensioning screw threads.

Copyright ASME International
Provided by IHS under license with ASME
No reproduction or networking permitted without license from IHS
Not for Resale

3.3.1 Taper and straight threads are similarly dimensioned except that the taper thread is shown tapered. The general dimensioning practices apply to all forms such as the 60 deg Unified, Acme, Stub Acme, and Buttress forms of screw threads.

3.3.2 Pipe threads, because of their peculiarity, are dimensioned in detail in ASME B1.20.1 and ASME B1.20.3. Reference may be made to those standards for dimensional changes to pipe threads. Dimensional changes to starting hole size, hole depths, full thread lengths, chamfer, taps, and gages should be as specified elsewhere under para. 3.3.

3.3.3 In those instances where threads are shown as a portion of a greatly enlarged detail, the representation of exact thread geometry might be justified. Proportions should conform to the maximum material condition of components shown. See Fig. 13.

3.3.4 The thread length dimensioned on the drawing should be the gaging length or the length of threads having full form, that is, the incomplete threads shall be outside or beyond the length specified. See Fig. 28.

3.3.5 Should there be reason to control or limit the number of incomplete threads on parts having full body diameter shank, the overall thread length including the vanish (runout or incomplete) threads shall be represented and dimensioned on the drawing in addition to the full thread length. See Fig. 9.

3.3.6 On short bolts, screws, or threaded parts having a fillet radius tangent to a blank diameter that is equivalent to the thread major diameter on which the objective is to run the threads as close to the head on shoulder as practicable, the maximum permissible distance from the head or shoulder to the nearest thread of full form may be dimensioned on the drawing instead of the full thread length. The incomplete thread shall not encroach on the fillet area. See Fig. 10.

3.3.7 On short bolts, screws, or threaded parts having a fillet radius tangent to a blank diameter that is equivalent to the thread pitch diameter, or threaded parts having a reduced body diameter equivalent to the thread pitch diameter, the length of the incomplete thread may be controlled by a dimension on the drawing as shown in Fig. 11.

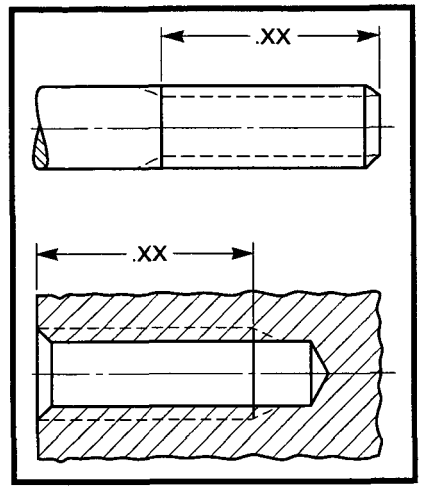

FIG. 28 SPECIFYING THREAD LENGTH

3.3.8 If a definite length of unthreaded and unscored body or shank of a threaded part is a functional requirement, equally or more important than thread length, it should be dimensioned as shown in Fig. 12.

3.3.9 Except for a rolled thread, the external thread chamfer may be specified as shown in Fig. 29 or ASME Y14.5M.

3.3.10 The external thread chamfer may be specified for rolled thread blanks as shown in Fig. 30.[1]

3.3.11 The full diameter depth of the drilled hole for blind tapped holes should be specified as shown in Fig. 31. Where the wall at drill point is the limiting consideration in addition to, or instead of the full-diameter depth, the drill point depth or the wall thickness may be dimensioned or stated in a note. In some cases, the depth may be specified as a minimum full diameter depth and the note "DO NOT BREAK THRU."

Hole size limits should be shown on the drawing or reference should be made on the drawing in the general notes that threads conform in all unspecified detail to ASME B1.1 or other applicable standard.

[1] After the thread is rolled, the effective chamfer is approximately 45 deg unless the raised metal resulting from rolling is machined off. Where removal of the raised metal is required, specific drawing coverage is necessary.

Copyright ASME International
Provided by IHS under license with ASME
No reproduction or networking permitted without license from IHS
Not for Resale

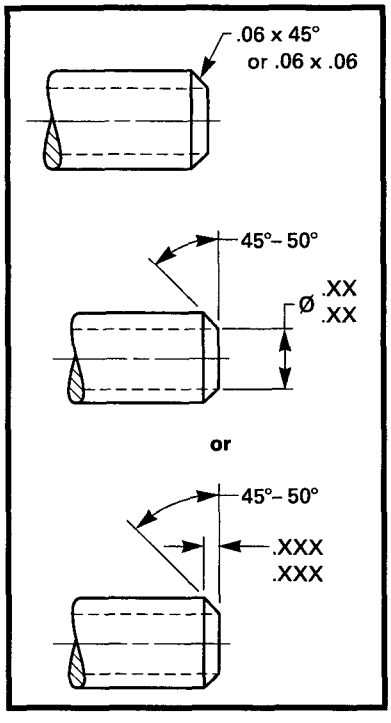

FIG. 29 SPECIFYING EXTERNAL CHAMFER

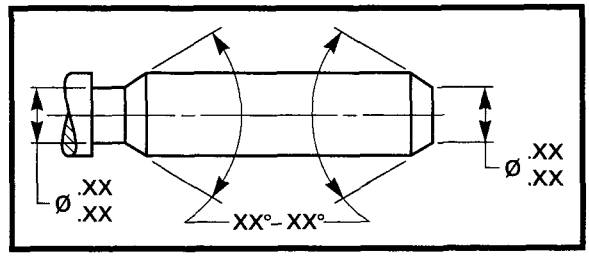

FIG. 30 SPECIFYING EXTERNAL CHAMFER FOR ROLLED THREAD BLANKS

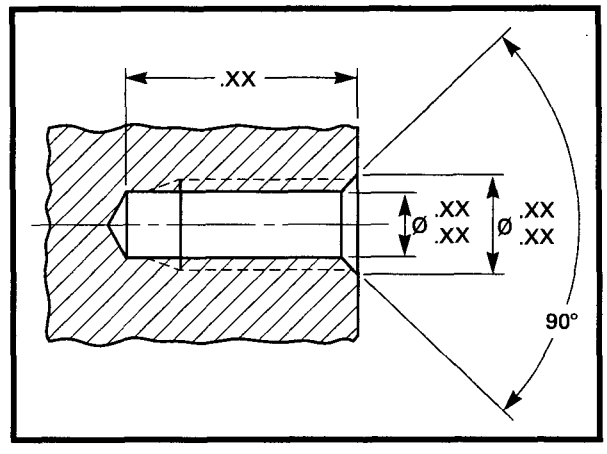

FIG. 31 SPECIFYING INTERNAL THREAD HOLE DEPTH, SIZE, AND COUNTERSINK

Copyright ASME International
Provided by IHS under license with ASME
No reproduction or networking permitted without license from IHS
Not for Resale

Copyright ASME International
Provided by IHS under license with ASME
No reproduction or networking permitted without license from IHS
Not for Resale

Copyright ASME International
Provided by IHS under license with ASME
No reproduction or networking permitted without license from IHS
Not for Resale



Copyright ASME International
Provided by IHS under license with ASME
No reproduction or networking permitted without license from IHS
Not for Resale