ENGINEERING DRAWING AND
RELATED DOCUMENTATION PRACTICES

ASME Y14.5M-1994

[REVISION OF ANSI Y14.5M-1982 (R1988)]

REAFFIRMED 1999

FOR CURRENT COMMITTEE PERSONNEL
PLEASE SEE ASME MANUAL AS-11

REAFFIRMED 2004

FOR CURRENT COMMITTEE PERSONNEL
PLEASE E-MAIL CS@asme.org

Dimensioning and Tolerancing

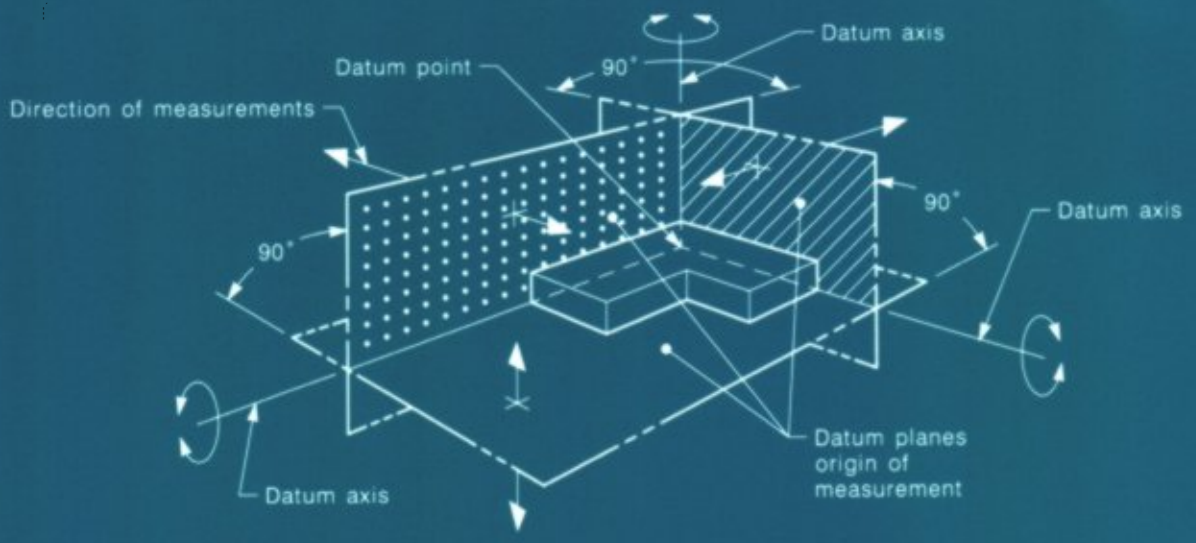

AN AMERICAN NATIONAL STANDARD

The American Society of
Mechanical Engineers

Copyright ASME International
Provided by IHS under license with ASME
No reproduction or networking permitted without license from IHS

Not for Resale

AN ASME NATIONAL STANDARD

ENGINEERING DRAWING AND RELATED DOCUMENTATION PRACTICES

Dimensioning and Tolerancing

ASME Y14.5M-1994

[REVISION OF ANSI Y14.5M-1982 (R1988)]

The American Society of
Mechanical Engineers

345 East 47 th Street, New York, N.Y.

Copyright ASME International
Provided by IHS under license with ASME
No reproduction or networking permitted without license from IHS

Not for Resale

Date of Issuance: January 23, 1995

This Standard will be revised when the Society approves the issuance of a new edition. There will be no addenda or written interpretations of the requirements of this Standard issued to this edition.

ASME is the registered trademark of The American Society of Mechanical Engineers.

This code or standard was developed under procedures accredited as meeting the criteria for American National Standards. The Consensus Committee that approved the code or standard was balanced to assure that individuals from competent and concerned interests have had an opportunity to participate. The proposed code or standard was made available for public review and comment which provides an opportunity for additional public input from industry, academia, regulatory agencies, and the public-at-large.

ASME does not "approve," "rate," or "endorse" any item, construction, proprietary device, or activity.

ASME does not take any position with respect to the validity of any patent rights asserted in connection with any items mentioned in this document, and does not undertake to insure anyone utilizing a standard against liability for infringement of any applicable Letters Patent, nor assume any such liability. Users of a code or standard are expressly advised that determination of the validity of any such patent rights, and the risk of infringement of such rights, is entirely their own responsibility.

Participation by federal agency representative(s) or person(s) affiliated with industry is not to be interpreted as government or industry endorsement of this code or standard.

ASME accepts responsibility for only those interpretations issued in accordance with governing ASME procedures and policies which preclude the issuance of interpretations by individual volunteers.

No part of this document may be reproduced in any form,
in an electronic retrieval system or otherwise,
without the prior written permission of the publisher.

Copyright © 1995 by
THE AMERICAN SOCIETY OF MECHANICAL ENGINEERS
All Rights Reserved
Printed in the U.S.A.

Copyright ASME International
Provided by IHS under license with ASME
No reproduction or networking permitted without license from IHS

Not for Resale

FOREWORD

(This Foreword is not a part of ASME Y14.5M-1994.)

Additions, modifications, and clarification contained in this revision of ANSI Y14.5M-1982 are intended to improve national and international standardization and to harmonize the United States practices and methodology with the universal standards trend toward more efficient worldwide technical communication. Coordinating and integrating these techniques into and via computer graphics and other electronic data systems for design, manufacture, verification, and similar processes is also a prime objective.

Incorporating this Standard as a vehicle to assist the United States' active participation and competitiveness in the world marketplace is a major goal. The emergence of priorities on total quality management, world-class engineering, and emphasis on compatibility with the International Organization for Standardization (ISO) 9000 series of quality standards has had a significant influence in the work of the Y14.5 Subcommittee.

This revision was initiated immediately after the official release of ANSI Y14.5M-1982 in December 1982 in response to deferred comments from that revision, new conceptual developments, new symbology, and international standards expansion. Twenty-three Subcommittee meetings and numerous working group meetings of the ASME Y14.5 Subcommittee were convened during the developmental period. The meetings were held in various cities around the United States. The Subcommittee's work was coordinated as much as possible with other related ASME committees and other standard developing bodies that share a common purpose on dimensioning and tolerancing or related standards. Particularly close alliance and liaison were sought with the ASME B89 Committee on "Dimensional Metrology," and new committees ASME Y14.5.1 on "Mathematical Definition of Y14.5," and ASME Y14.5.2 on "Certification of GD&T Professionals."

Of high priority was the continuing United States participation in the development of ISO standards through its U.S. member body, the American National Standards Institute (ANSI). Some members of the Y14.5 Subcommittee have attended and participated in numerous international meetings and activities during and since the last revision of this Standard. Meetings were attended in Paris, France (1981), West Berlin, Germany (1982), New York City, New York (1984), West Berlin, Germany (1987), Zurich, Switzerland (1989), Orlando, Florida (1991), and Carmel, California (1992). United States delegates have served as members and conveners of Working Groups, chaired some TC10/SC5

Copyright ASME International
Provided by IHS under license with ASME
No reproduction or networking permitted without license from IHS
Not for Resale

international meetings and have participated in all ISO standards projects on the subject of dimensioning and tolerancing during this period.

In addition to past participation in developing and maintaining all of such ISO standards as ISO 5458, ISO 5459, ISO 2692, ISO 3040, ISO TR 5460, ISO 1660, ISO 406, ISO 129, ISO 8015, and ISO 7083, U.S. delegates have also participated in all new ISO standards development projects. U.S. delegates have provided convenership (chairmanship) to the development of ISO/2692: 1988 DAM1 on "Least Material Condition," ISO 10578 on "Projected Tolerance Zone," and ISO 10579 on "Nonrigid Parts." Current projects related to the revision of ISO 1101, "Technical Drawings, Geometrical Tolerancing" and ISO 5458, "Positional Tolerancing" also have participation and input by U.S. delegates. Current new work on a revision to ISO 2692 includes consideration of the "principle of reciprocity" (symbol Ⓡ) that was originally put forth by the U.S. and Japan in the early 1970's as a proposed standard. It was considered by some countries to be premature for inclusion then and zero positional tolerancing was adopted as a near substitute.

As a recent significant development, the United States, through its member body, ANSI, has received the ISO/TC10/SC5 Secretariat. Thus, the U.S. inherits the world leadership for standards development on "Technical drawings, product definition and related documentation, geometrical dimensioning and tolerancing." Work will continue on maintenance of existing standards and the development of new standards related to geometrical tolerancing.

The conflict in principle regarding limits of size between the "envelope principle" (Taylor Principle, Rule #1) and the "independency principle" continues, although somewhat abated. Issuance of ISO 8015:1985, "Technical Drawings-Fundamental Tolerancing Principle," features the independency principle but allows the option of the envelope principle by either reference to a national standard (for example, ASME Y14.5M-1994) on the drawing, or by invoking the symbol Ⓔ. The Y14.5 Standard continues to advocate and use the envelope principle (boundary of perfect form at MMC of the individual feature) that has been traditionally used in the U.S. and widely accepted elsewhere.

The least material condition Ⓛ concept is expanded. More complete coverage on this subject is to be considered in future revisions as the state of the art progresses.

Significant steps are taken in this revision to resolve some long-standing differences between the Y14.5 and ISO practices. As U.S. delegates also play a significant role in the development and maintenance at the level of international standards, these differences are eventually tempered and resolved by a merging of these dual objectives. In addition, some long-range planning by the Y14.5 activity has also now materialized in the transition to eliminating these differences. Two significant changes found in this revision are adoption and extension of the universal datum feature symbol and discontinuance of the use of the RFS symbol Ⓢ. Other changes, additions, extensions of principles, and resolution of differences are listed in Appendix A, "Principal Changes and Improvements."

The technical expertise and experience of the Y14.5 Subcommittee are provided by the dedicated interests and resources of its personnel. Its members represent a broad cross section of U.S. industry, the Department of Defense (DOD), educational institutions, national laboratories, professional societies, and members of the private sector. The Subcommittee encourages participation by all and works diligently to achieve a consensus on all matters. It seeks a balance between past practices, state of the art, national and international standards, new technology, computer and electronic integration, and most importantly, the understandability of the technical data contained in the Standard itself. Since members are also users of the Standard, a "jury of peers" is constantly present to ensure, as well as possible, that all voices are heard and satisfactory compromises are made in the interests of all users. Through the due process of final approval

Copyright ASME International
Provided by IHS under license with ASME
No reproduction or networking permitted without license from IHS
Not for Resale

procedures via ASME, ANSI, DOD, and public review, the Standard achieves its final make-up as the result of the voluntary consensus standard system.

The expansion and extension of principles of the composite positional tolerancing concept occupied a sizable segment of the Subcommittee's time and resources during this revision. This valuable concept, originally born out of need for a convenient method to state two requirements together for a pattern of features, one the "pattern-locating tolerance" (larger tolerance) and the other the "feature-relating tolerance" (smaller tolerance), gave rise to the need for further clarification and coverage in this revision. As these principles are extended from the original examples, first introduced in ANSI Y14.5-1973, varying interpretations are possible where a secondary datum feature is added to the feature-relating tolerance zone frame. Since the original coverage in ANSI Y14.5-1973 made no attempt to indicate clearly an interpretation representing this extension of principle, varied applications and interpretations have occurred during the interim, each supposedly having some support from the original Standard example and text. ANSI Y14.5M-1982 repeated the same examples, added two figures (Figs. 142 and 143), and made a slight change of words in the text. The changes and additions in this revision eventually highlighted the areas of question and the Subcommittee debated this issue with many prolonged and in-depth discussions. As a result, the composite tolerancing text and figures have now been expanded to enhance and clarify applicability. To effect this clarification and expansion, and to "set the standard," an explicit meaning has been assigned to the feature-relating tolerance frame for composite positional tolerancing control. The feature-relating tolerance can no longer be interpreted as including location of the pattern. Section 5 clarifies the application of composite tolerancing and contrasts it with the use of two single-segment feature control frames.

Since profile composite tolerancing is now also introduced into the Standard, its feature-relating tolerance frame likewise controls the orientation of the profile to the datums without regard to the basic dimensions that locate the profile. Section 6 further explains the details of composite profile tolerancing.

Although the continuity and stability of the technical content of the Standard are paramount, numerous changes, additions, and clarifications have taken place in this revision. To meet the objectives and purposes of the Standard as before referenced, it must remain dynamic and is, thus, subject to modification as deemed necessary. For help in using this Standard and to isolate those areas and subjects involving any changes or additions of consequence, refer to Appendix A. A detailed compendium of changes and additions is provided.

Suggestions for improvement of this Standard will be welcomed. They should be sent to The American Society of Mechanical Engineers; Attention: Secretary, Y14 Main Committee; 345 East 47th Street; New York, NY 10017.

This revision was approved as an ASME Standard on March 14, 1994, and as an American National Standard on January 5, 1995.

Copyright ASME International
Provided by IHS under license with ASME
No reproduction or networking permitted without license from IHS
Not for Resale

--`,,,,`,,,-`-`,,`,,`,`,,`---

Copyright ASME International
Provided by IHS under license with ASME
No reproduction or networking permitted without license from IHS

Not for Resale

ASME STANDARDS COMMITTEE Y14
Engineering Drawing and Related Documentation Practices

(The following is the roster of the Committee at the time of approval of this Standard.)

OFFICERS

P. E. McKim, *Chairman*
F. Bakos, Jr., *Vice Chairman*
C. J. Gomez, *Secretary*

COMMITTEE PERSONNEL

A. R. Anderson, Trikon Corp.
F. Bakos, Jr., Eastman Kodak Co.
T. D. Benoit, *Alternate,* Pratt & Whitney CEB
D. E. Bowerman, Copeland Corp.
J. V. Burleigh, The Boeing Co.
L. Burns
R. A. Chadderdon, Southwest Consultants
F. A. Christiana, ASEA Brown Boveri Combustion Engineering Systems
M. E. Curtis, Jr., Rexnord Corp.
R. W. DeBolt, Motorola Inc., Government and Space Technology Group
H. L. Dubocq
L. W. Foster, L. W. Foster Associates, Inc.
C. J. Gomez, The American Society of Mechanical Engineers
D. Hagler, E-Systems, Inc., Garland Division
E. L. Kardas, Pratt & Whitney CEB
C. G. Lance, Santa Cruz Technology Center
W. J. McGee, National Standards Educators Association
P. E. McKim, Caterpillar Inc.
C. D. Merkley, IBM Corp.
E. Niemiec, Westinghouse Electric Corp.
R. J. Polizzi
D. L. Ragon, Deere & Company, John Deere Dubuque Works
R. L. Tennis, Caterpillar Inc.
R. P. Tremblay, U.S. Department of the Army, ARDEC
R. K. Walker, Westinghouse Marine
G. H. Whitmire, TEC/TREND
K. E. Wiegandt, Sandia National Laboratory
P. Wreede, E-Systems, Inc.

PERSONNEL OF SUBCOMMITTEE 5 — DIMENSIONING AND TOLERANCING

L. W. Foster, *Chairman,* L. W. Foster Associates, Inc.
D. J. Buchman, *Vice Chairman,* University of Cincinnati/GE Aircraft Engines
C. G. Lance, *Vice Chairman,* Santa Cruz Technology Center

Copyright ASME International
Provided by IHS under license with ASME
No reproduction or networking permitted without license from IHS
Not for Resale

A. R. Anderson, *Secretary*, General Motors Corp., Powertrain Division/Trikon Corp.
F. Bakos, Jr., Eastman Kodak Co.
T. D. Benoit, *Alternate*, Pratt & Whitney CEB
D. E. Bowerman, Copeland Corp.
R. A. Chadderdon, Southwest Consultants
R. E. Coombes, Caterpillar Inc.
N. W. Cutler, Polaroid Corp.
G. P. Gooldy, GPG Consultants, Inc.
W. A. Haefele, Williams Creek Graphics
B. W. Heathcotte, Geometrics Consulting
A. M. Johnson, The Boeing Co.
E. L. Kardas, Pratt & Whitney CEB
D. P. Karl, Ford Motor Co.
K. S. King, Dahlgren Division, Naval Surface Warfare Center
C. D. Merkley, IBM Corp.
T. C. Miller, Los Alamos National Laboratory
A. G. Neumann, Technical Consultants, Inc.
E. Niemiec, Westinghouse Electric Corp.
J. M. Palmer, Jr., Garrett Turbine Engine Co.
D. L. Ragon, Deere & Company, John Deere Dubuque Works
D. W. Shepherd, Shepherd Industries/Northern Illinois University
G. S. Tokunaga, Lawrence Livermore National Laboratory
R. P. Tremblay, U.S. Department of the Army, ARDEC
B. A. Wilson, McDonnell Douglas Corp.
J. E. Winconek, Allied-Signal Aerospace

Y14/SC 5 Editing and Illustrations Group

L. S. Darcy, Herman Miller, Inc.
R. M. Evans, Boeing Commercial Airplane Group
C. W. Ferguson, Steelcase, Inc.
A. L. Herpich, Xerox Corp.
A. Krulikowski, General Motors Corp., Powertrain Division
W. M. Stites, Accratronics Seals Corp.
B. A. Wilson, McDonnell Douglas Corp.
J. E. Winconek, Allied-Signal Aerospace
P. Wreede, E-Systems, Inc.

Copyright ASME International
Provided by IHS under license with ASME
No reproduction or networking permitted without license from IHS
Not for Resale

CONTENTS

Foreword iii
Standards Committee Roster vii

1 Scope, Definitions, and General Dimensioning 1
1.1 General 1
1.2 References 1
1.3 Definitions 2
1.4 Fundamental Rules 4
1.5 Units of Measurement 4
1.6 Types of Dimensioning 5
1.7 Application of Dimensions 6
1.8 Dimensioning Features 10
1.9 Location of Features 18

2 General Tolerancing and Related Principles 23
2.1 General 23
2.2 Direct Tolerancing Methods 24
2.3 Tolerance Expression 24
2.4 Interpretation of Limits 25
2.5 Single Limits 25
2.6 Tolerance Accumulation 25
2.7 Limits of Size 26
2.8 Applicability of RFS, MMC, and LMC 28
2.9 Screw Threads 29
2.10 Gears and Splines 29
2.11 Virtual/Resultant Condition 29
2.12 Angular Surfaces 29
2.13 Conical Tapers 29
2.14 Flat Tapers 37
2.15 Radius 38
2.16 Statistical Tolerancing 38

3 Symbology 41
3.1 General 41
3.2 Use of Notes to Supplement Symbols 41
3.3 Symbol Construction 41
3.4 Geometric Tolerance Symbols 47
3.5 Feature Control Frame Placement 48
3.6 Definition of the Tolerance Zone 48
3.7 Tabulated Tolerances 50

Copyright ASME International
Provided by IHS under license with ASME
No reproduction or networking permitted without license from IHS
Not for Resale

4 Datum Referencing 51
4.1 General 51
4.2 Immobilization of Part 51
4.3 Datum Features 52
4.4 Specifying Datum Features in an Order of Precedence 52
4.5 Establishing Datums 55
4.6 Datum Targets 70

5 Tolerances of Location 81
5.1 General 81
5.2 Positional Tolerancing 81
5.3 Fundamental Explanation of Positional Tolerancing 81
5.4 Feature Pattern Location 93
5.5 Projected Tolerance Zone 115
5.6 Nonparallel Holes 135
5.7 Counterbored Holes 135
5.8 Closer Control at One End of a Feature 135
5.9 Bidirectional Positional Tolerancing of Features 135
5.10 Noncircular Features 139
5.11 Coaxiality Controls 142
5.12 Concentricity 144
5.13 Positional Tolerancing for Symmetrical Relationships 149
5.14 Symmetry Tolerancing to Control the Median Points of Opposed or Correspondingly-Located Elements of Features 149
5.15 Spherical Features 149

6 Tolerances of Form, Profile, Orientation, and Runout 157
6.1 General 157
6.2 Form and Orientation Control 157
6.3 Specifying Form and Orientation Tolerances 157
6.4 Form Tolerances 157
6.5 Profile Control 163
6.6 Orientation Tolerances 174
6.7 Runout 189
6.8 Free State Variation 191

Appendices

A Principal Changes and Improvements 197
A1 General 197
A2 Figures 197
A3 Section 1, Scope, Definitions, and General Dimensioning 197
A4 Section 2, General Tolerancing and Related Principles 198
A5 Section 3, Symbology 199
A6 Section 4, Datum Referencing 199
A7 Section 5, Tolerances of Location 200
A8 Section 6, Tolerances of Form, Profile, Orientation, and Runout 202
A9 Appendix A, Principal Changes and Improvements 202
A10 Appendix B, Formulas for Positional Tolerancing 203
A11 Appendix C, Form, Proportion, and Comparison of Symbols 203
A12 Appendix D, Former Practices 203

Copyright ASME International
Provided by IHS under license with ASME
No reproduction or networking permitted without license from IHS
Not for Resale

A13 Appendix E, Decision Diagrams for Geometric Control 203

B Formulas for Positional Tolerancing 205
B1 General 205
B2 Formula Symbols 205
B3 Floating Fastener Case 205
B4 Fixed Fastener Case When Projected Tolerance Zone Is Used 205
B5 provision for Out-of-Squareness When Projected Tolerance Zone is Not Used 206
B6 Coaxial Features 207
B7 Limits and Fits 207

C Form, Proportion, and Comparison of Symbols 209
C1 General 209
C2 Form and Proportion 209
C3 Comparison 209

D Former Practices 215
D1 General 215
D2 Definition for Feature of Size 215
D3 Applicability of RFS, MMC, and LMC 215
D4 Tangent Radii 215
D5 Datum Feature Symbol 215
D6 Projected Tolerance Zone 215

E Decision Diagrams for Geometric Control 219
E1 Purpose 219
E2 Functional Requirements 219
E3 Reference to Standard 219
E4 Geometric Controls 219
E5 Choosing Other Controls 219
E6 Use of Modifiers 219
E7 Datums 219

Index 229

Copyright ASME International
Provided by IHS under license with ASME
No reproduction or networking permitted without license from IHS
Not for Resale

--`,,,`,,,-`-`,,`,,`,`,,`---

Copyright ASME International
Provided by IHS under license with ASME
No reproduction or networking permitted without license from IHS

Not for Resale

ENGINEERING DRAWING AND RELATED DOCUMENTATION PRACTICES

DIMENSIONING AND TOLERANCING

1 Scope, Definitions, and General Dimensioning

1.1 GENERAL

This Standard establishes uniform practices for stating and interpreting dimensioning, tolerancing, and related requirements for use on engineering drawings and in related documents. For a mathematical explanation of many of the principles in this Standard, see ASME Y14.5.1M. Practices unique to architectural and civil engineering and welding symbology are not included.

1.1.1 Section 1, General. This Section establishes definitions, fundamental rules, and practices for general dimensioning that apply to coordinate as well as geometric dimensioning methods. For tolerancing practices, see Sections 2 through 6.

1.1.2 Units. The International System of Units (SI) is featured in this Standard because SI units are expected to supersede United States (U.S.) customary units specified on engineering drawings. Customary units could equally well have been used without prejudice to the principles established.

1.1.3 Reference to this Standard. Where drawings are based on this Standard, this fact shall be noted on the drawings or in a document referenced on the drawings. References to this Standard shall state ASME Y14.5M-1994.

1.1.4 Figures. The figures in this Standard are intended only as illustrations to aid the user in understanding the principles and methods of dimensioning and tolerancing described in the text. The absence of a figure illustrating the desired application is neither reason to assume inapplicability, nor basis for drawing rejection. In some instances, figures show added detail for emphasis. In other instances, figures are incomplete by intent. Numerical values of dimensions and tolerances are illustrative only.

NOTE: To assist the users of this Standard, a listing of the paragraph(s) that refer to an illustration appears in the lower right-hand corner of each figure. This listing may not be all-inclusive. The absence of a listing is not a reason to assume inapplicability.

1.1.5 Notes. Notes herein in capital letters are intended to appear on finished drawings. Notes in lower case letters are explanatory only and are not intended to appear on drawings.

1.1.6 Reference to Gaging. This document is not intended as a gaging standard. Any reference to gaging is included for explanatory purposes only.

1.1.7 Symbols. Adoption of the symbols indicating dimensional requirements, as shown in Fig. C-2 of Appendix C, does not preclude the use of equivalent terms or abbreviations where symbology is considered inappropriate.

1.2 REFERENCES

When the following American National Standards referred to in this Standard are superseded by a revision approved by the American National Standards Institute, Inc., the revision shall apply.

American National Standards

ANSI B4.2-1978, Preferred Metric Limits and Fits

ANSI B5.10-1981, Machine Tapers — Self Holding and Steep Taper Series

ANSI/ASME B46.1-1985, Surface Texture (Surface Roughness, Waviness, and Lay)

ANSI B89.3.1-1972, Measurement of Out-of-Roundness

ANSI B92.1-1970,[1] Involute Splines and Inspection, Inch Version

ANSI B92.2M-1980,[1] Metric Module, Involute Splines

ANSI/ASME B94.6-1984, Knurling

ANSI B94.11M-1979, Twist Drills

ANSI Y14.1-1980, Drawing Sheet Size and Format

[1] SAE standards are available from the Society of Automotive Engineers, 400 Warrendale Drive, Warrendale, PA 15096.

Copyright ASME International
Provided by IHS under license with ASME
No reproduction or networking permitted without license from IHS
Not for Resale

ASME Y14.2M-1992, Line Conventions and Lettering

ASME Y14.5.1M-1994, Mathematical Definition of Dimensioning and Tolerancing Principles

ANSI Y14.6-1978, Screw Thread Representation

ANSI Y14.6aM-1981, Screw Thread Representation (Metric Supplement)

ANSI Y14.7.1-1971, Gear Drawing Standards — Part 1: For Spur, Helical, Double Helical, and Rack

ANSI Y14.7.2-1978, Gear and Spline Drawing Standards — Part 2: Bevel and Hypoid Gears

ASME Y14.8M-1989, Castings and Forgings

ANSI Y14.36-1978, Surface Texture Symbols

ANSI/IEEE 268-1992,[2] Metric Practice

1.2.1 Additional Sources (Not Cited)

ANSI/ASME B1.2-1983, Gages and Gaging for Unified Inch Screw Threads

ANSI B4.4M-1981 (R1987), Inspection of Workpieces

ASME Y1.1-1989, Abbreviations — For Use on Drawings and in Text

ASME Y14.3M-1994, Multiview and Sectional View Drawings

1.3 DEFINITIONS

The following terms are defined as their use applies in this Standard. Additionally, definitions throughout the Standard of italicized terms are given in sections describing their application. Their location may be identified by referring to the index.

1.3.1 Boundary, Inner. A worst case boundary (that is, locus) generated by the smallest feature (MMC for an internal feature and LMC for an external feature) minus the stated geometric tolerance and any additional geometric tolerance (if applicable) from the feature's departure from its specified material condition. See Figs. 2-9 through 2-12.

1.3.2 Boundary, Outer. A worst case boundary (that is, locus) generated by the largest feature (LMC for an internal feature and MMC for an external feature) plus the geometric tolerance and any additional geometric tolerance (if applicable) from the feature's departure from its specified material condition. See Figs. 2-9 through 2-12.

1.3.3 Datum. A theoretically exact point, axis, or plane derived from the true geometric counterpart of a specified datum feature. A datum is the origin from which the location or geometric characteristics of features of a part are established.

1.3.4 Datum Feature. An actual feature of a part that is used to establish a datum.

1.3.5 Datum Feature Simulator. A surface of adequately precise form (such as a surface plate, a gage surface, or a mandrel) contacting the datum feature(s) and used to establish the simulated datum(s).

NOTE: Simulated datum features are used as the practical embodiment of the datums during manufacture and inspection.

1.3.6 Datum, Simulated. A point, axis, or plane established by processing or inspection equipment, such as the following simulators: a surface plate, a gage surface, or a mandrel. See paras. 4.4.1 and 4.4.2.

1.3.7 Datum Target. A specified point, line, or area on a part used to establish a datum.

1.3.8 Dimension. A numerical value expressed in appropriate units of measure and used to define the size, location, geometric characteristic, or surface texture of a part or part feature.

1.3.9 Dimension, Basic. A numerical value used to describe the theoretically exact size, profile, orientation, or location of a feature or datum target. See Fig. 3-7. It is the basis from which permissible variations are established by tolerances on other dimensions, in notes, or in feature control frames. See Figs. 2-14, 2-15, and 3-25.

1.3.10 Dimension, Reference. A dimension, usually without tolerance, used for information purposes only. A reference dimension is a repeat of a dimension or is derived from other values shown on the drawing or on related drawings. It is considered auxiliary information and does not govern production or inspection operations. See Figs. 1-17 and 1-18.

1.3.11 Envelope, Actual Mating. This term is defined according to the type of feature, as follows:

(a) For an External Feature. A similar perfect feature counterpart of smallest size that can be circumscribed about the feature so that it just contacts the surface at the highest points. For example, a smallest cylinder of perfect form or two parallel

[2] IEEE standards are available from the Institute of Electrical and Electronics Engineers, Service Center, 445 Hoes Lane, Piscataway, NJ 08854.

Copyright ASME International
Provided by IHS under license with ASME
No reproduction or networking permitted without license from IHS
Not for Resale

planes of perfect form at minimum separation that just contact(s) the highest points of the surface(s).

For features controlled by orientation or positional tolerances, the actual mating envelope is oriented relative to the appropriate datum(s), for example, perpendicular to a primary datum plane.

(b) For an Internal Feature. A similar perfect feature counterpart of largest size that can be inscribed within the feature so that it just contacts the surface at the highest points. For example, a largest cylinder of perfect form or two parallel planes of perfect form at maximum separation that just contact(s) the highest points of the surface(s).

For features controlled by orientation or positional tolerances, the actual mating envelope is oriented relative to the appropriate datum(s).

1.3.12 Feature. The general term applied to a physical portion of a part, such as a surface, pin, tab, hole, or slot.

1.3.13 Feature, Axis Of. A straight line that coincides with the axis of the true geometric counterpart of the specified feature.

1.3.14 Feature, Center Plane Of. A plane that coincides with the center plane of the true geometric counterpart of the specified feature.

1.3.15 Feature, Derived Median Plane Of. An imperfect plane (abstract) that passes through the center points of all line segments bounded by the feature. These line segments are normal to the actual mating envelope.

1.3.16 Feature, Derived Median Line Of. An imperfect line (abstract) that passes through the center points of all cross sections of the feature. These cross sections are normal to the axis of the actual mating envelope. The cross section center points are determined as per ANSI B89.3.1.

1.3.17 Feature of Size. One cylindrical or spherical surface, or a set of two opposed elements or opposed parallel surfaces, associated with a size dimension.

1.3.18 Full Indicator Movement (FIM). The total movement of an indicator where appropriately applied to a surface to measure its variations.

1.3.19 Least Material Condition (LMC). The condition in which a feature of size contains the least amount of material within the stated limits of size — for example, maximum hole diameter, minimum shaft diameter.

1.3.20 Maximum Material Condition (MMC). The condition in which a feature of size contains the maximum amount of material within the stated limits of size — for example, minimum hole diameter, maximum shaft diameter.

1.3.21 Plane, Tangent. A theoretically exact plane derived from the true geometric counterpart of the specified feature surface.

1.3.22 Regardless of Feature Size (RFS). The term used to indicate that a geometric tolerance or datum reference applies at any increment of size of the feature within its size tolerance.

1.3.23 Resultant Condition. The variable boundary generated by the collective effects of a size feature's specified MMC or LMC material condition, the geometric tolerance for that material condition, the size tolerance, and the additional geometric tolerance derived from the feature's departure from its specified material condition. See Figs. 2-9 through 2-12.

1.3.24 Size, Actual. The general term for the size of a produced feature. This term includes the actual mating size and the actual local sizes.

1.3.25 Size, Actual Local. The value of any individual distance at any cross section of a feature.

1.3.26 Size, Actual Mating. The dimensional value of the actual mating envelope.

1.3.27 Size, Limits Of. The specified maximum and minimum sizes. See para. 2.7.

1.3.28 Size, Nominal. The designation used for purposes of general identification.

1.3.29 Size, Resultant Condition. The actual value of the resultant condition boundary.

1.3.30 Size, Virtual Condition. The actual value of the virtual condition boundary.

1.3.31 Tolerance. The total amount a specific dimension is permitted to vary. The tolerance is the difference between the maximum and minimum limits.

1.3.32 Tolerance, Bilateral. A tolerance in which variation is permitted in both directions from the specified dimension.

1.3.33 Tolerance, Geometric. The general term applied to the category of tolerances used to control form, profile, orientation, location, and runout.

1.3.34 Tolerance, Unilateral. A tolerance in

Copyright ASME International
Provided by IHS under license with ASME
No reproduction or networking permitted without license from IHS
Not for Resale

which variation is permitted in one direction from the specified dimension.

1.3.35 True Geometric Counterpart. The theoretically perfect boundary (virtual condition or actual mating envelope) or best-fit (tangent) plane of a specified datum feature. See Figs. 4-11 and 4-10. Also see paras. 1.3.5 and 1.3.6 regarding the simulated datum.

1.3.36 True Position. The theoretically exact location of a feature established by basic dimensions.

1.3.37 Virtual Condition. A constant boundary generated by the collective effects of a size feature's specified MMC or LMC material condition and the geometric tolerance for that material condition. See Figs. 2-9 through 2-12.

1.4 FUNDAMENTAL RULES

Dimensioning and tolerancing shall clearly define engineering intent and shall conform to the following.

(a) Each dimension shall have a tolerance, except for those dimensions specifically identified as reference, maximum, minimum, or stock (commercial stock size). The tolerance may be applied directly to the dimension (or indirectly in the case of basic dimensions), indicated by a general note, or located in a supplementary block of the drawing format. See ANSI Y14.1.

(b) Dimensioning and tolerancing shall be complete so there is full understanding of the characteristics of each feature. Neither scaling (measuring the size of a feature directly from an engineering drawing) nor assumption of a distance or size is permitted, except as follows: Undimensioned drawings, such as loft, printed wiring, templates, and master layouts prepared on stable material, are excluded provided the necessary control dimensions are specified.

(c) Each necessary dimension of an end product shall be shown. No more dimensions than those necessary for complete definition shall be given. The use of reference dimensions on a drawing should be minimized.

(d) Dimensions shall be selected and arranged to suit the function and mating relationship of a part and shall not be subject to more than one interpretation.

(e) The drawing should define a part without specifying manufacturing methods. Thus, only the diameter of a hole is given without indicating whether it is to be drilled, reamed, punched, or made by any other operation. However, in those instances where manufacturing, processing, quality assurance, or environmental information is essential to the definition of engineering requirements, it shall be specified on the drawing or in a document referenced on the drawing.

(f) It is permissible to identify as nonmandatory certain processing dimensions that provide for finish allowance, shrink allowance, and other requirements, provided the final dimensions are given on the drawing. Nonmandatory processing dimensions shall be identified by an appropriate note, such as NONMANDATORY (MFG DATA).

(g) Dimensions should be arranged to provide required information for optimum readability. Dimensions should be shown in true profile views and refer to visible outlines.

(h) Wires, cables, sheets, rods, and other materials manufactured to gage or code numbers shall be specified by linear dimensions indicating the diameter or thickness. Gage or code numbers may be shown in parentheses following the dimension.

(i) A 90° angle applies where center lines and lines depicting features are shown on a drawing at right angles and no angle is specified. See para. 2.1.1.2.

(j) A 90° basic angle applies where center lines of features in a pattern or surfaces shown at right angles on the drawing are located or defined by basic dimensions and no angle is specified.

(k) Unless otherwise specified, all dimensions are applicable at 20°C (68°F). Compensation may be made for measurements made at other temperatures.

(l) All dimensions and tolerances apply in a free state condition. This principle does not apply to nonrigid parts as defined in paras. 2.7.1.3(b) and 6.8.

(m) Unless otherwise specified, all geometric tolerances apply for full depth, length, and width of the feature.

(n) Dimensions and tolerances apply only at the drawing level where they are specified. A dimension specified for a given feature on one level of drawing, (for example, a detail drawing) is not mandatory for that feature at any other level (for example, an assembly drawing).

1.5 UNITS OF MEASUREMENT

For uniformity, all dimensions in this Standard are given in SI units. However, the unit of measurement selected should be in accordance with the policy of the user.

1.5.1 SI (Metric) Linear Units. The commonly

Copyright ASME International
Provided by IHS under license with ASME
No reproduction or networking permitted without license from IHS
Not for Resale

used SI linear unit used on engineering drawings is the millimeter.

1.5.2 U.S. Customary Linear Units. The commonly used U.S. customary linear unit used on engineering drawings is the decimal inch.

1.5.3 Identification of Linear Units. On drawings where all dimensions are either in millimeters or inches, individual identification of linear units is not required. However, the drawing shall contain a note stating UNLESS OTHERWISE SPECIFIED, ALL DIMENSIONS ARE IN MILLIMETERS (or IN INCHES, as applicable).

1.5.3.1 Combination SI (Metric) and U.S. Customary Linear Units. Where some inch dimensions are shown on a millimeter-dimensioned drawing, the abbreviation IN. shall follow the inch values. Where some millimeter dimensions are shown on an inch-dimensioned drawing, the symbol mm shall follow the millimeter values.

1.5.4 Angular Units. Angular dimensions are expressed in either degrees and decimal parts of a degree or in degrees, minutes, and seconds. These latter dimensions are expressed by symbols: for degrees °, for minutes ', and for seconds ". Where degrees are indicated alone, the numerical value shall be followed by the symbol. Where only minutes or seconds are specified, the number of minutes or seconds shall be preceded by 0° or 0°0', as applicable. See Fig. 1-1.

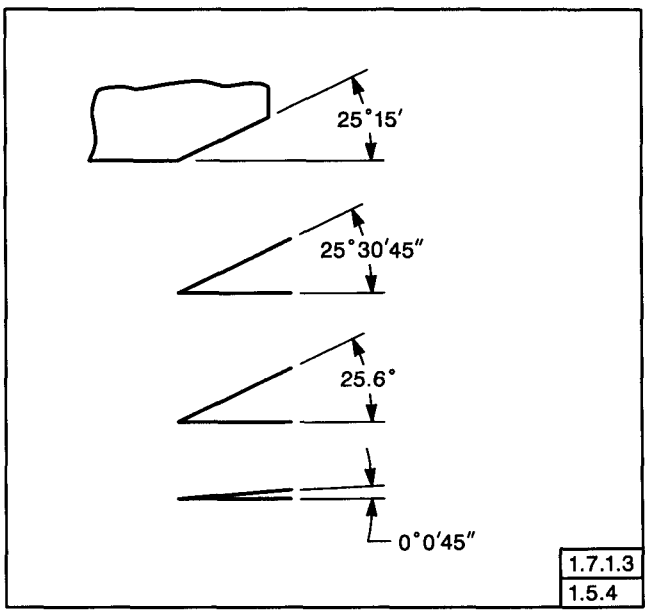

FIG. 1-1 ANGULAR UNITS

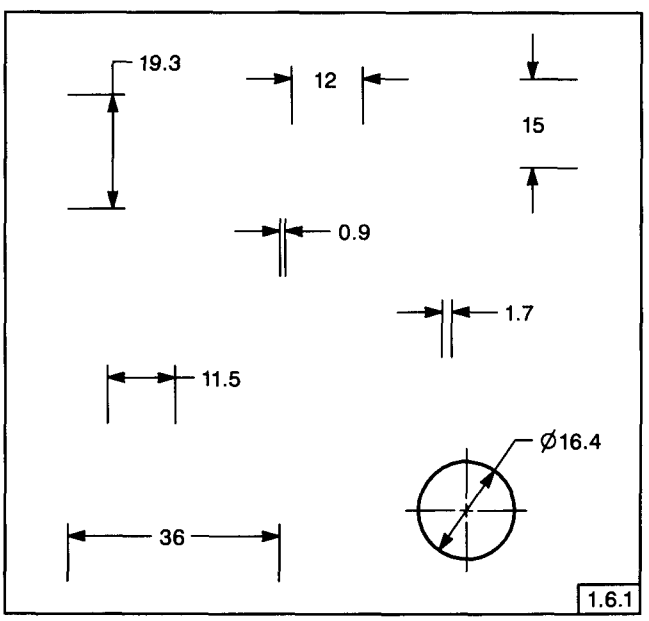

FIG. 1-2 MILLIMETER DIMENSIONS

1.6 TYPES OF DIMENSIONING

Decimal dimensioning shall be used on drawings except where certain commercial commodities are identified by standardized nominal designations, such as pipe and lumber sizes.

1.6.1 Millimeter Dimensioning. The following shall be observed where specifying millimeter dimensions on drawings:

(a) Where the dimension is less than one millimeter, a zero precedes the decimal point. See Fig. 1-2.

(b) Where the dimension is a whole number, neither the decimal point nor a zero is shown. See Fig. 1-2.

(c) Where the dimension exceeds a whole number by a decimal fraction of one millimeter, the last digit to the right of the decimal point is not followed by a zero. See Fig. 1-2.

NOTE: This practice differs for tolerances expressed bilaterally or as limits. See paras. 2.3.1(b) and (c).

(d) Neither commas nor spaces shall be used to separate digits into groups in specifying millimeter dimensions on drawings.

1.6.2 Decimal Inch Dimensioning. The following shall be observed where specifying decimal inch dimensions on drawings:

(a) A zero is not used before the decimal point for values less than one inch.

(b) A dimension is expressed to the same number of decimal places as its tolerance. Zeros are added

Copyright ASME International
Provided by IHS under license with ASME
No reproduction or networking permitted without license from IHS
Not for Resale

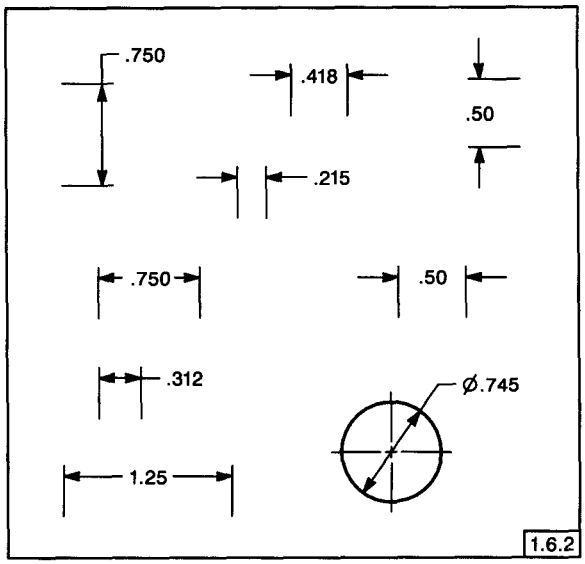

FIG. 1-3 DECIMAL INCH DIMENSIONS

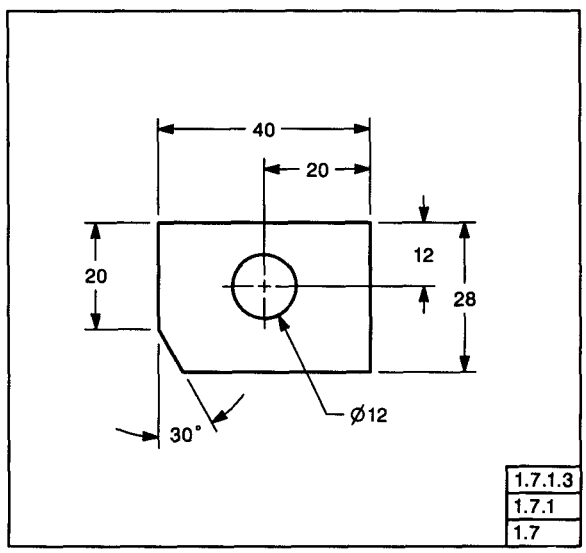

FIG. 1-4 APPLICATION OF DIMENSIONS

to the right of the decimal point where necessary. See Fig. 1-3 and para. 2.3.2.

1.6.3 Decimal Points. Decimal points must be uniform, dense, and large enough to be clearly visible and meet the reproduction requirements of ASME Y14.2M. Decimal points are placed in line with the bottom of the associated digits.

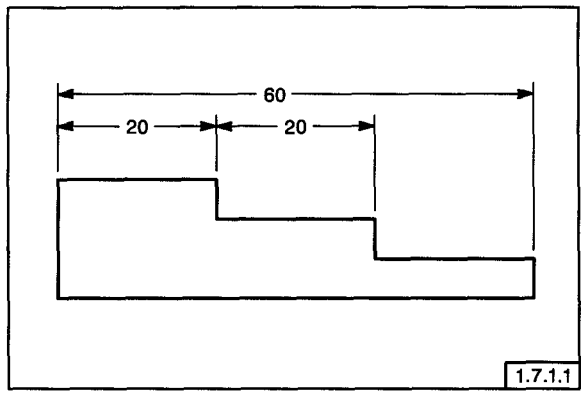

FIG. 1-5 GROUPING OF DIMENSIONS

1.6.4 Conversion and Rounding of Linear Units. For information on conversion and rounding of U.S. customary linear units, see ANSI/IEEE 268.

1.7 APPLICATION OF DIMENSIONS

Dimensions are applied by means of dimension lines, extension lines, chain lines, or a leader from a dimension, note, or specification directed to the appropriate feature. See Fig. 1-4. General notes are used to convey additional information. For further information on dimension lines, extension lines, chain lines, and leaders, see ASME Y14.2M.

1.7.1 Dimension Lines. A dimension line, with its arrowheads, shows the direction and extent of a dimension. Numerals indicate the number of units of a measurement. Preferably, dimension lines should be broken for insertion of numerals as shown in Fig. 1-4. Where horizontal dimension lines are not broken, numerals are placed above and parallel to the dimension lines.

NOTE: The following shall not be used as a dimension line: a center line, an extension line, a phantom line, a line that is part of the outline of the object, or a continuation of any of these lines. A dimension line is not used as an extension line, except where a simplified method of coordinate dimensioning is used to define curved outlines. See Fig. 1-33.

1.7.1.1 Alignment. Dimension lines shall be aligned if practicable and grouped for uniform appearance. See Fig. 1-5.

1.7.1.2 Spacing. Dimension lines are drawn parallel to the direction of measurement. The space between the first dimension line and the part outline should be not less than 10 mm; the space between

Copyright ASME International
Provided by IHS under license with ASME
No reproduction or networking permitted without license from IHS
Not for Resale

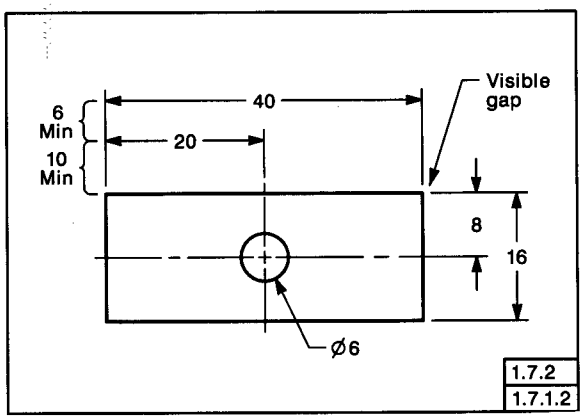

FIG. 1-6 SPACING OF DIMENSION LINES

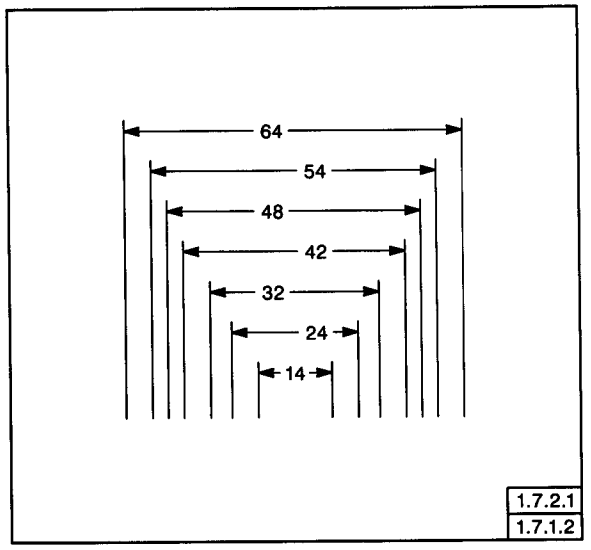

FIG. 1-7 STAGGERED DIMENSIONS

succeeding parallel dimension lines should be not less than 6 mm. See Fig. 1-6.

NOTE: These spacings are intended as guides only. If the drawing meets the reproduction requirements of the accepted industry or military reproduction specification, nonconformance to these spacing requirements is not a basis for rejection of the drawing.

Where there are several parallel dimension lines, the numerals should be staggered for easier reading. See Fig. 1-7.

1.7.1.3 Angle Dimensions. The dimension line of an angle is an arc drawn with its center at the apex of the angle. The arrowheads terminate at the extensions of the two sides. See Figs. 1-1 and 1-4.

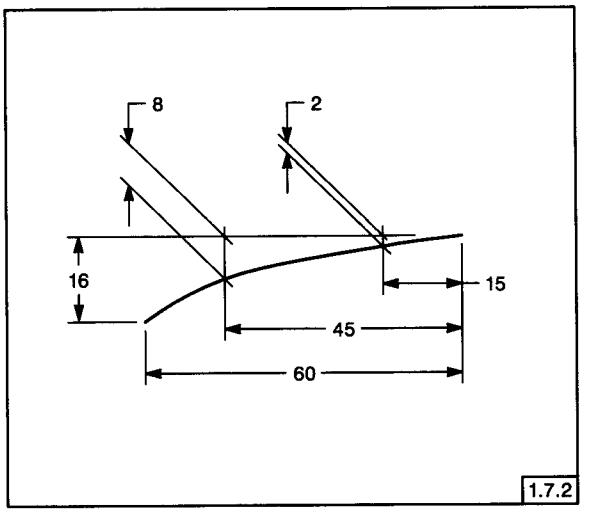

FIG. 1-8 OBLIQUE EXTENSION LINES

1.7.1.4 Crossing Dimension Lines. Crossing dimension lines should be avoided. Where unavoidable, the dimension lines are unbroken.

1.7.2 Extension (Projection) Lines. Extension lines are used to indicate the extension of a surface or point to a location preferably outside the part outline. See para. 1.7.8. Extension lines start with a short visible gap from the outline of the part and extend beyond the outermost related dimension line. See Fig. 1-6. Extension lines are drawn perpendicular to dimension lines. Where space is limited, extension lines may be drawn at an oblique angle to clearly illustrate where they apply. Where oblique lines are used, the dimension lines are shown in the direction in which they apply. See Fig. 1-8.

1.7.2.1 Crossing Extension Lines. Wherever practicable, extension lines should neither cross one another nor cross dimension lines. To minimize such crossings, the shortest dimension line is shown nearest the outline of the object. See Fig. 1-7. Where extension lines must cross other extension lines, dimension lines, or lines depicting features, they are not broken. Where extension lines cross arrowheads or dimension lines close to arrowheads, a break in the extension line is permissible. See Fig. 1-9.

1.7.2.2 Locating Points. Where a point is located by extension lines only, the extension lines from surfaces should pass through the point. See Fig. 1-10.

1.7.3 Limited Length or Area Indication. Where it is desired to indicate that a limited length

Copyright ASME International
Provided by IHS under license with ASME
No reproduction or networking permitted without license from IHS
Not for Resale

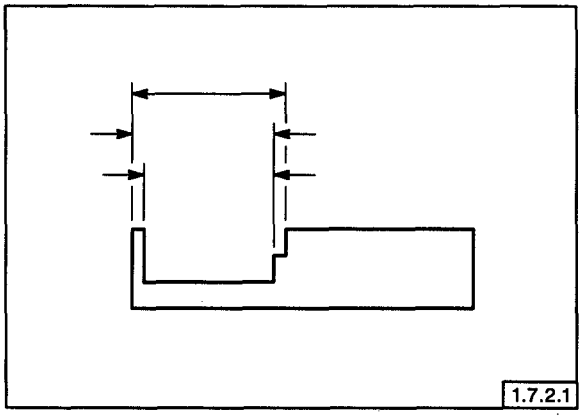

FIG. 1-9 BREAKS IN EXTENSION LINES

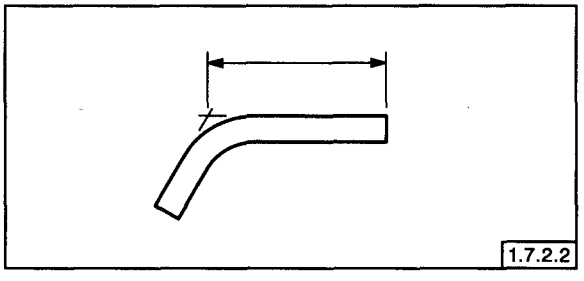

FIG. 1-10 POINT LOCATIONS

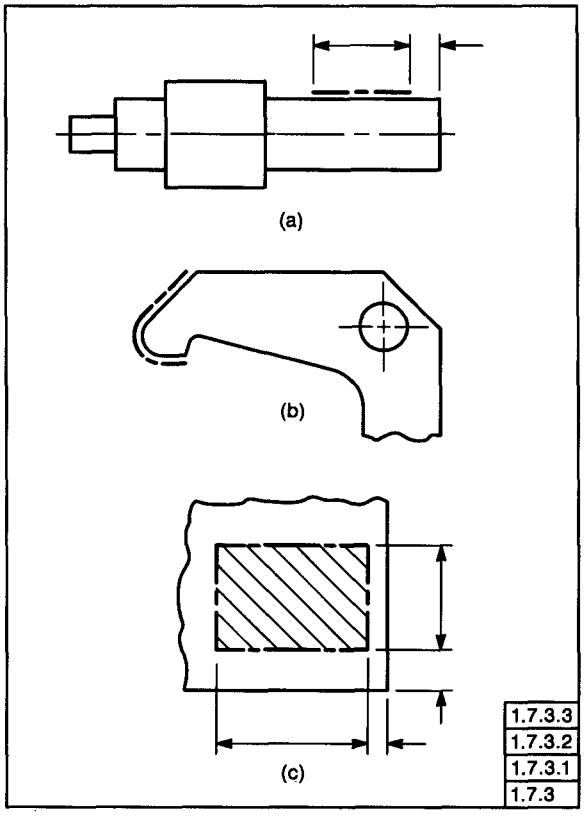

FIG. 1-11 LIMITED LENGTH OR AREA INDICATION

or area of a surface is to receive additional treatment or consideration within limits specified on the drawing, the extent of these limits may be indicated by use of a chain line. See Fig. 1-11.

1.7.3.1 Chain Lines. In an appropriate view or section, a chain line is drawn parallel to the surface profile at a short distance from it. Dimensions are added for length and location. If applied to a surface of revolution, the indication may be shown on one side only. See Fig. 1-11(a).

1.7.3.2 Omitting Chain Line Dimensions. If the chain line clearly indicates the location and extent of the surface area, dimensions may be omitted. See Fig. 1-11(b).

1.7.3.3 Area Indication Identification. Where the desired area is shown on a direct view of the surface, the area is section lined within the chain line boundary and appropriately dimensioned. See Fig. 1-11(c).

1.7.4 Leaders (Leader Lines). A leader is used to direct a dimension, note, or symbol to the intended place on the drawing. Normally, a leader terminates in an arrowhead. However, where it is intended for a leader to refer to a surface by ending within the outline of that surface, the leader should terminate in a dot. A leader should be an inclined straight line except for a short horizontal portion extending to the mid-height of the first or last letter or digit of the note or dimension. Two or more leaders to adjacent areas on the drawing should be drawn parallel to each other. See Fig. 1-12.

1.7.4.1 Leader Directed Dimensions. Leader directed dimensions are specified individually to avoid complicated leaders. See Fig. 1-13. If too many leaders would impair the legibility of the drawing, letters or symbols should be used to identify features. See Fig. 1-14.

1.7.4.2 Circle and Arc. Where a leader is directed to a circle or an arc, its direction should be radial. See Fig. 1-15.

1.7.5 Reading Direction. Reading direction for the following specifications apply:

Copyright ASME International
Provided by IHS under license with ASME
No reproduction or networking permitted without license from IHS
Not for Resale

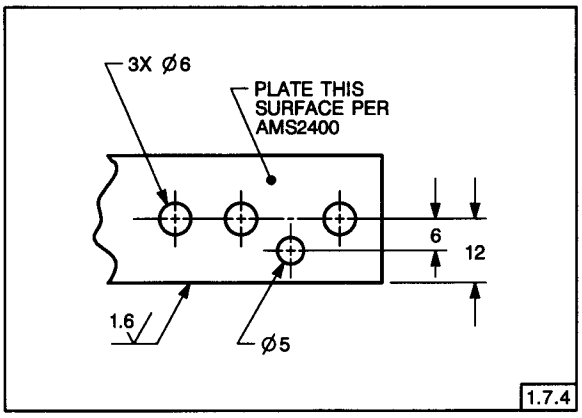

FIG. 1-12 LEADERS

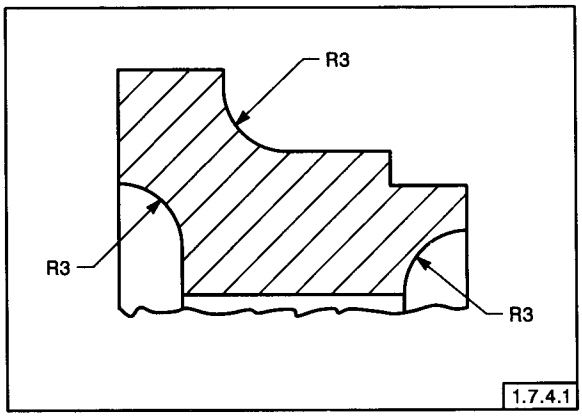

FIG. 1-13 LEADER-DIRECTED DIMENSIONS

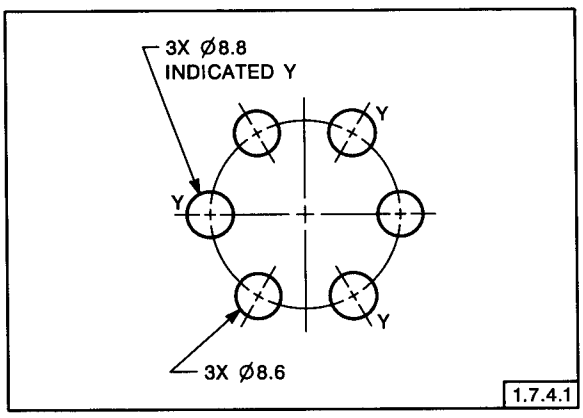

FIG. 1-14 MINIMIZING LEADERS

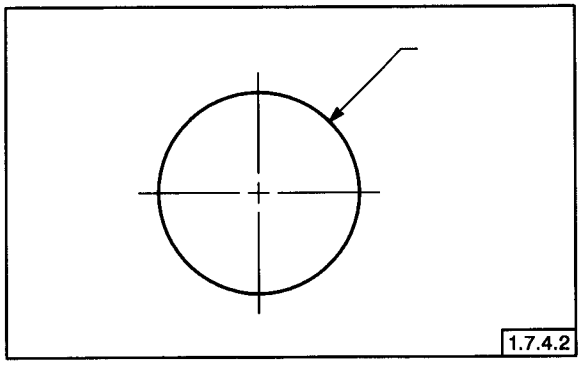

FIG. 1-15 LEADER DIRECTIONS

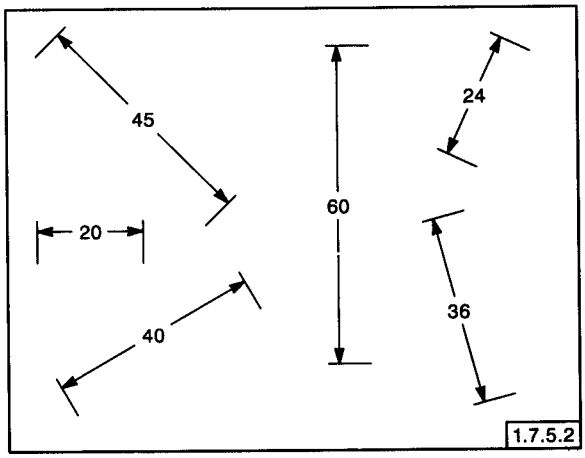

FIG. 1-16 READING DIRECTION

1.7.5.1 Notes. Notes should be placed to read from the bottom of the drawing with regard to the orientation of the drawing format.

1.7.5.2 Dimensions. Dimensions shown with dimension lines and arrowheads should be placed to read from the bottom of the drawing. See Fig. 1-16.

1.7.5.3 Baseline Dimensioning. Baseline dimensions are shown aligned to their extension lines and read from the bottom or right side of the drawing. See Fig. 1-49.

1.7.6 Reference Dimensions. The method for identifying a reference dimension (or reference data) on drawings is to enclose the dimension (or data) within parentheses. See Figs. 1-17 and 1-18.

1.7.7 Overall Dimensions. Where an overall dimension is specified, one intermediate dimension is omitted or identified as a reference dimension. See

Copyright ASME International
Provided by IHS under license with ASME
No reproduction or networking permitted without license from IHS
Not for Resale

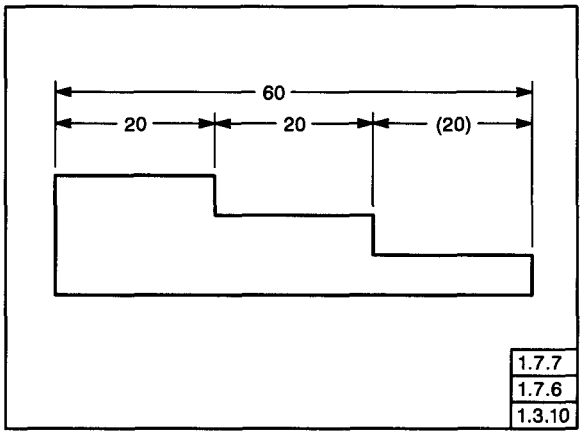

FIG. 1-17 INTERMEDIATE REFERENCE DIMENSION

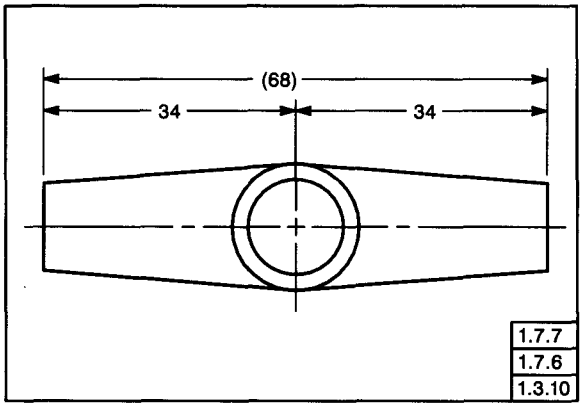

FIG. 1-18 OVERALL REFERENCE DIMENSION

Fig. 1-17. Where the intermediate dimensions are more important than the overall dimension, the overall dimension, if used, is identified as a reference dimension. See Fig. 1-18.

1.7.8 Dimensioning Within the Outline of a View. Dimensions are usually placed outside the outline of a view. Where directness of application makes it desirable, or where extension lines or leader lines would be excessively long, dimensions may be placed within the outline of a view.

1.7.9 Dimensions Not to Scale. Agreement should exist between the pictorial presentation of a feature and its defining dimension. Where a change to a feature is made, the following, as applicable, must be observed.

(a) Where the sole authority for the product definition is a hard copy original drawing prepared either manually or on an interactive computer graphics system, and it is not feasible to update the pictorial view of the feature, the defining dimension is to be underlined with a straight thick line.

(b) Where the sole authority for the product definition is a dataset prepared on a computer graphics system, agreement shall be maintained between the defining dimension and the graphics presentation of the feature, in all views. The defining dimension and the true size, location, and direction of the feature shall always be in complete agreement.

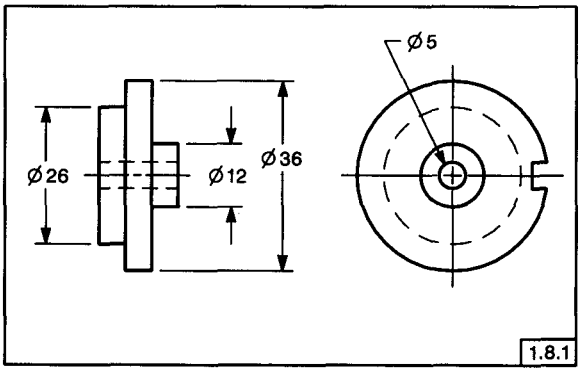

FIG. 1-19 DIAMETERS

1.8 DIMENSIONING FEATURES

Various characteristics and features of parts require unique methods of dimensioning.

1.8.1 Diameters. The diameter symbol precedes all diametral values. See Fig. 1-19 and para. 3.3.7. Where the diameter of a spherical feature is specified, the diametral value is preceded by the spherical diameter symbol. See Fig. 3-8 and para. 3.3.7. Where the diameters of a number of concentric cylindrical features are specified, such diameters should be dimensioned in a longitudinal view if practicable.

1.8.2 Radii. Each radius value is preceded by the appropriate radius symbol. See Figs. 1-20 and 3-8 and para. 3.3.7. A radius dimension line uses one arrowhead, at the arc end. An arrowhead is never used at the radius center. Where location of the center is important and space permits, a dimension line is drawn from the radius center with the arrowhead touching the arc, and the dimension is placed between the arrowhead and the center. Where space is limited, the dimension line is extended through the radius center. Where it is inconvenient to place the

Copyright ASME International
Provided by IHS under license with ASME
No reproduction or networking permitted without license from IHS
Not for Resale

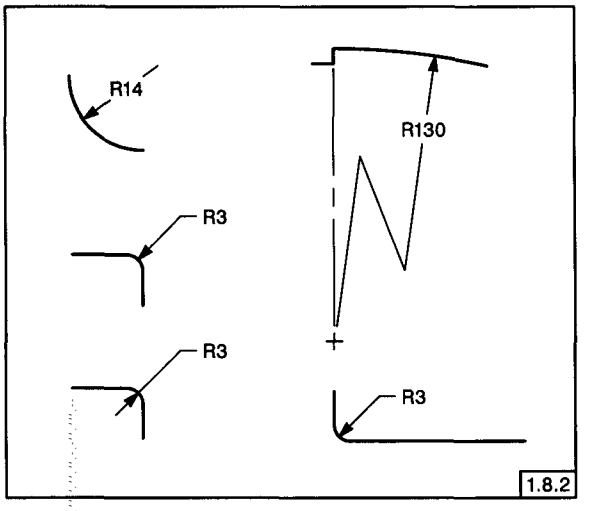

FIG. 1-20 RADII

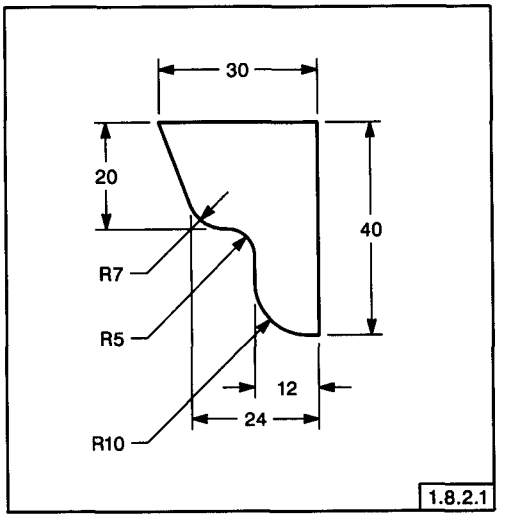

FIG. 1-22 RADII WITH UNLOCATED CENTERS

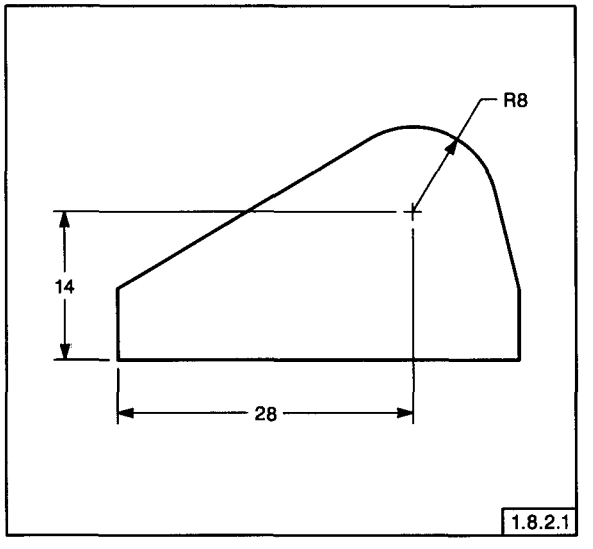

FIG. 1-21 RADIUS WITH LOCATED CENTER

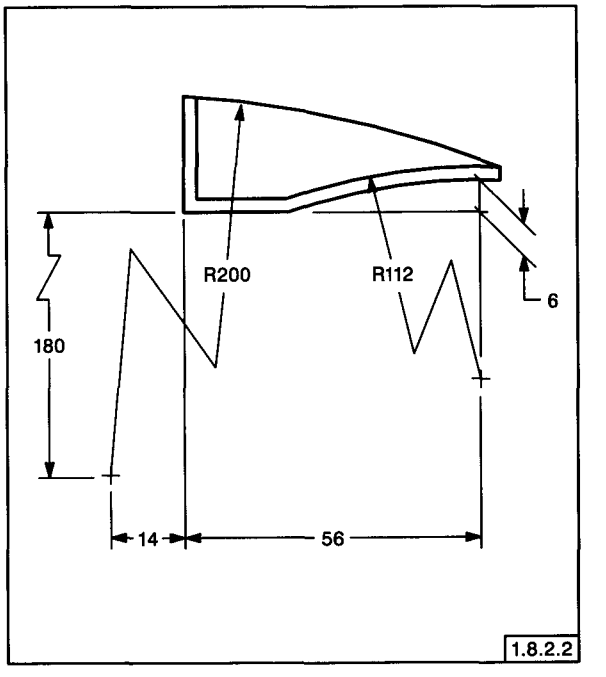

FIG. 1-23 FORESHORTENED RADII

arrowhead between the radius center and the arc, it may be placed outside the arc with a leader. Where the center of a radius is not dimensionally located, the center shall not be indicated. See Fig. 1-20.

1.8.2.1 Center of Radius. Where a dimension is given to the center of a radius, a small cross is drawn at the center. Extension lines and dimension lines are used to locate the center. See Fig. 1-21. Where location of the center is unimportant, the drawing must clearly show that the arc location is controlled by other dimensioned features such as tangent surfaces. See Fig. 1-22.

1.8.2.2 Foreshortened Radii. Where the center of a radius is outside the drawing or interferes with another view, the radius dimension line may be foreshortened. See Fig. 1-23. That portion of the dimension line extending from the arrowhead is ra-

Copyright ASME International
Provided by IHS under license with ASME
No reproduction or networking permitted without license from IHS
Not for Resale

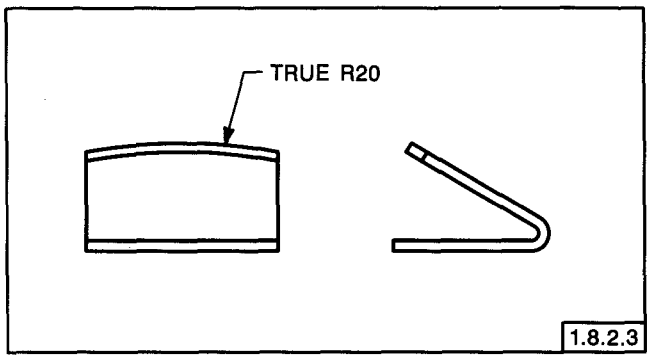

FIG. 1-24 TRUE RADIUS

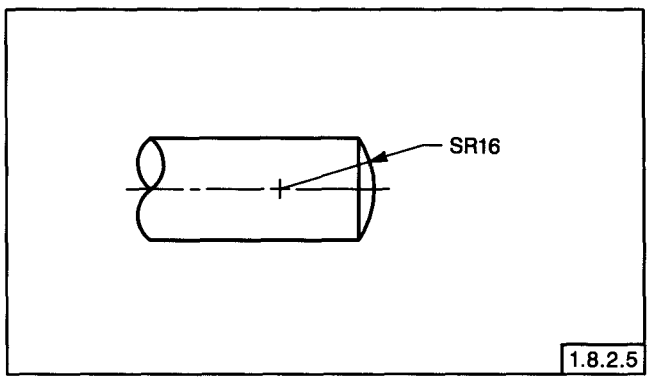

FIG. 1-25 SPHERICAL RADIUS

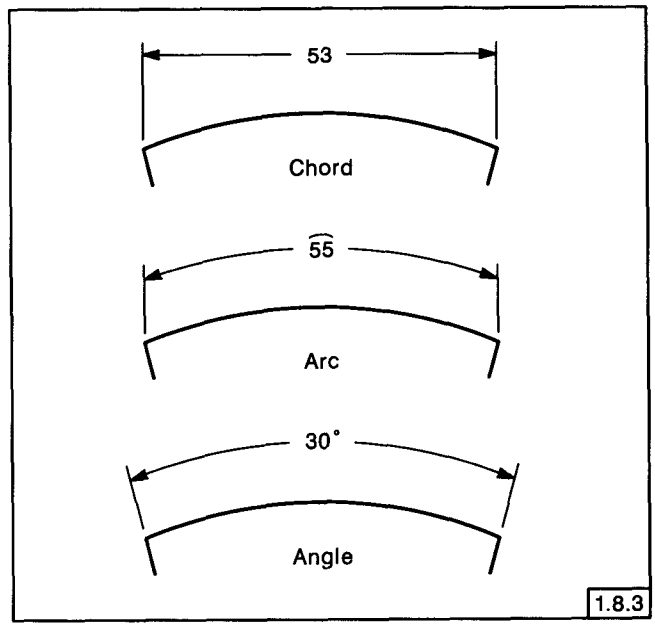

FIG. 1-26 DIMENSIONING CHORDS, ARCS, AND ANGLES

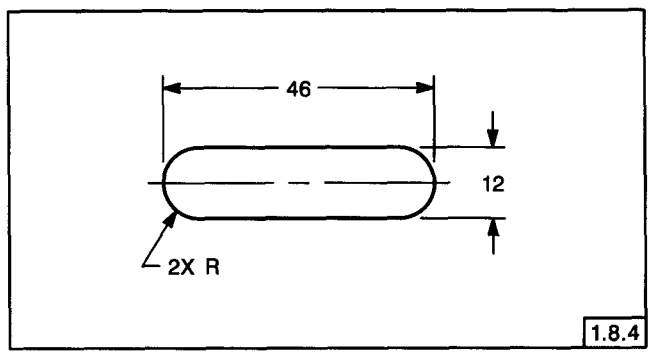

FIG. 1-27 FULLY ROUNDED ENDS

dial relative to the arc. Where the radius dimension line is foreshortened and the center is located by coordinate dimensions, the dimension line locating the center is also foreshortened.

1.8.2.3 True Radius. Where a radius is dimensioned in a view that does not show the true shape of the radius, TRUE R is added before the radius dimension. See Fig. 1-24.

1.8.2.4 Multiple Radii. Where a part has a number of radii of the same dimension, a note may be used instead of dimensioning each radius separately.

1.8.2.5 Spherical Radii. Where a spherical surface is dimensioned by a radius, the radius dimension is preceded by the symbol SR. See Fig. 1-25.

1.8.3 Chords, Arcs, and Angles. The dimensioning of chords, arcs, and angles shall be as shown in Fig. 1-26.

1.8.4 Rounded Ends. Overall dimensions are used for features having rounded ends. For fully rounded ends, the radii are indicated but not dimensioned. See Fig. 1-27. For features with partially rounded ends, the radii are dimensioned. See Fig. 1-28.

1.8.5 Rounded Corners. Where corners are rounded, dimensions define the edges, and the arcs are tangent. See Fig. 1-29.

1.8.6 Outlines Consisting of Arcs. A curved outline composed of two or more arcs is dimensioned by giving the radii of all arcs and locating the necessary centers with coordinate dimensions. Other radii are located on the basis of their points of tangency. See Fig. 1-30.

1.8.7 Irregular Outlines. Irregular outlines may be dimensioned as shown in Figs. 1-31 and 1-32. Circular or noncircular outlines may be dimensioned by the rectangular coordinate or offset method. See

Copyright ASME International
Provided by IHS under license with ASME
No reproduction or networking permitted without license from IHS
Not for Resale

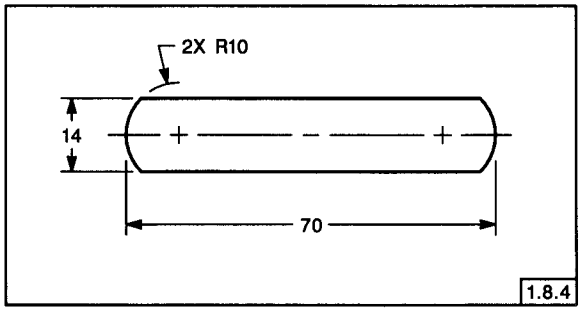

FIG. 1-28 PARTIALLY ROUNDED ENDS

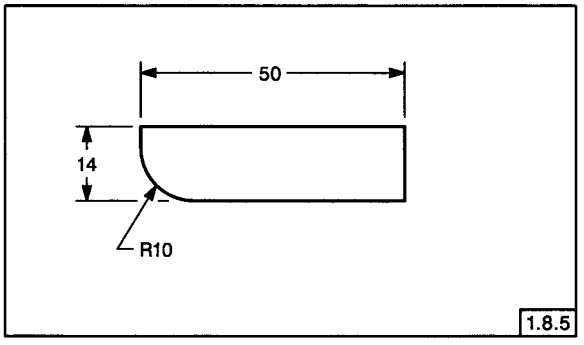

FIG. 1-29 ROUNDED CORNERS

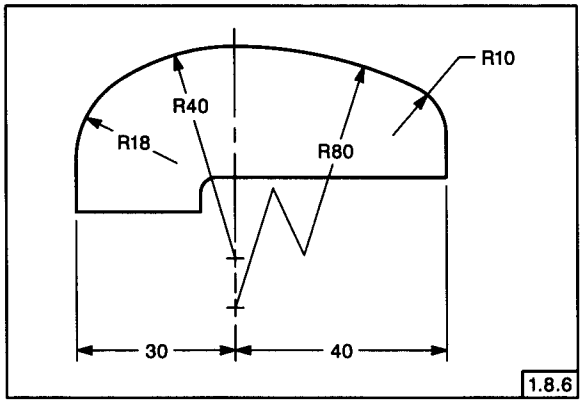

FIG. 1-30 CIRCULAR ARC OUTLINE

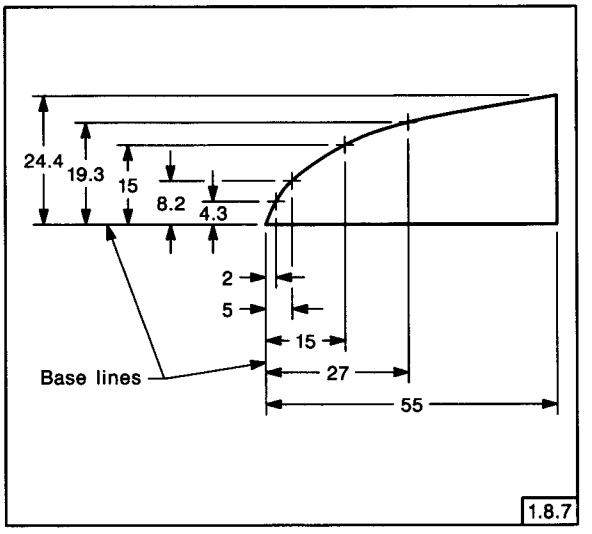

FIG. 1-31 COORDINATE OR OFFSET OUTLINE

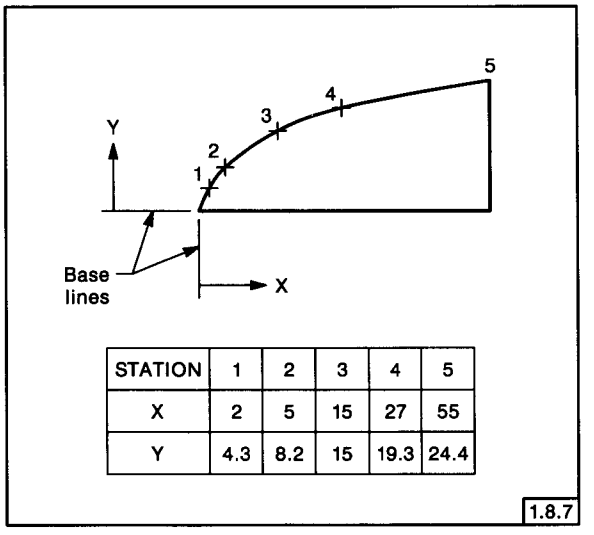

STATION	1	2	3	4	5
X	2	5	15	27	55
Y	4.3	8.2	15	19.3	24.4

FIG. 1-32 TABULATED OUTLINE

Fig. 1-31. Coordinates are dimensioned from base lines. Where many coordinates are required to define an outline, the vertical and horizontal coordinate dimensions may be tabulated, as in Fig. 1-32.

1.8.7.1 Grid System. Curved pieces that represent patterns may be defined by a grid system with numbered grid lines.

1.8.8 Symmetrical Outlines. Symmetrical outlines may be dimensioned on one side of the center line of symmetry. Such is the case where, due to the size of the part or space limitations, only part of the outline can be conveniently shown. See Fig. 1-33. One-half the outline of the symmetrical shape is shown and symmetry is indicated by applying symbols for part symmetry to the center line. See ASME Y14.2M.

Copyright ASME International
Provided by IHS under license with ASME
No reproduction or networking permitted without license from IHS
Not for Resale

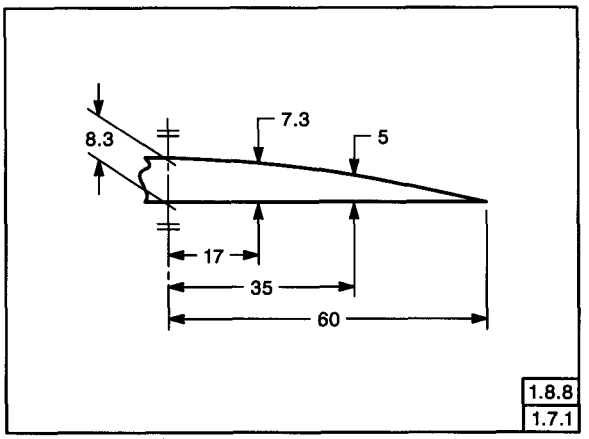

FIG. 1-33 SYMMETRICAL OUTLINES

1.8.9 Round Holes. Round holes are dimensioned as shown in Fig. 1-34. Where it is not clear that a hole goes through, the abbreviation THRU follows a dimension. The depth dimension of a blind hole is the depth of the full diameter from the outer surface of the part. Where the depth dimension is not clear, as from a curved surface, the depth should be dimensioned. For methods of specifying blind holes, see Fig. 1-34.

1.8.10 Slotted Holes. Slotted holes are dimensioned as shown in Fig. 1-35. The end radii are indicated but not dimensioned.

1.8.11 Counterbored Holes. Counterbored holes may be specified as shown in Fig. 1-36. Where the thickness of the remaining material has significance, this thickness (rather than the depth) is dimensioned. For holes having more than one counterbore, see Fig. 1-37.

1.8.12 Countersunk and Counterdrilled Holes. For countersunk holes, the diameter and included angle of the countersink are specified. For counterdrilled holes, the diameter and depth of the counterdrill are specified. Specifying the included angle of the counterdrill is optional. See Fig. 1-38. The depth dimension is the depth of the full diameter of the counterdrill from the outer surface of the part.

1.8.12.1 Chamfered and Countersunk Holes on Curved Surfaces. Where a hole is chamfered or countersunk on a curved surface, the diameter specified on the drawing applies at the minor diameter of the chamfer or countersink. See Fig. 1-39.

1.8.13 Spotfaces. The diameter of the spotfaced area is specified. Either the depth or the remaining thickness of material may be specified. See Fig. 1-40. A spotface may be specified by note only and need not be delineated on the drawing. If no depth or remaining thickness of material is specified, the spotface is the minimum depth necessary to clean up the surface to the specified diameter.

1.8.14 Machining Centers. Where machining centers are to remain on the finished part, they are indicated by a note or dimensioned on the drawing. See ANSI B94.11M.

1.8.15 Chamfers. Chamfers are dimensioned by a linear dimension and an angle, or by two linear dimensions. See Figs. 1-41 through 1-44. Where an angle and a linear dimension are specified, the linear dimension is the distance from the indicated surface of the part to the start of the chamfer. See Fig. 1-41.

1.8.15.1 Chamfers Specified by Note. A note may be used to specify 45° chamfers, as in Fig. 1-42. This method is used only with 45° chamfers, as the linear value applies in either direction.

1.8.15.2 Round Holes. Where the edge of a round hole is chamfered, the practice of para. 1.8.15.1 is followed, except where the chamfer diameter requires dimensional control. See Fig. 1-43. This type of control may also be applied to the chamfer diameter on a shaft.

1.8.15.3 Intersecting Surfaces. Where chamfers are required for surfaces intersecting at other than right angles, the methods shown in Fig. 1-44 are used.

1.8.16 Keyseats. Keyseats are dimensioned by width, depth, location, and if required, length. The depth is dimensioned from the opposite side of the shaft or hole. See Fig. 1-45.

1.8.17 Knurling. Knurling is specified in terms of type, pitch, and diameter before and after knurling. Where control is not required, the diameter after knurling is omitted. Where only a portion of a feature requires knurling, axial dimensioning is provided. See Fig. 1-46.

1.8.17.1 Knurling for Press Fit. Where required to provide a press fit between parts, knurling is specified by a note that includes the type of knurl required, its pitch, the toleranced diameter of the feature before knurling, and the minimum acceptable diameter after knurling. See Fig. 1-47.

Copyright ASME International
Provided by IHS under license with ASME
No reproduction or networking permitted without license from IHS
Not for Resale

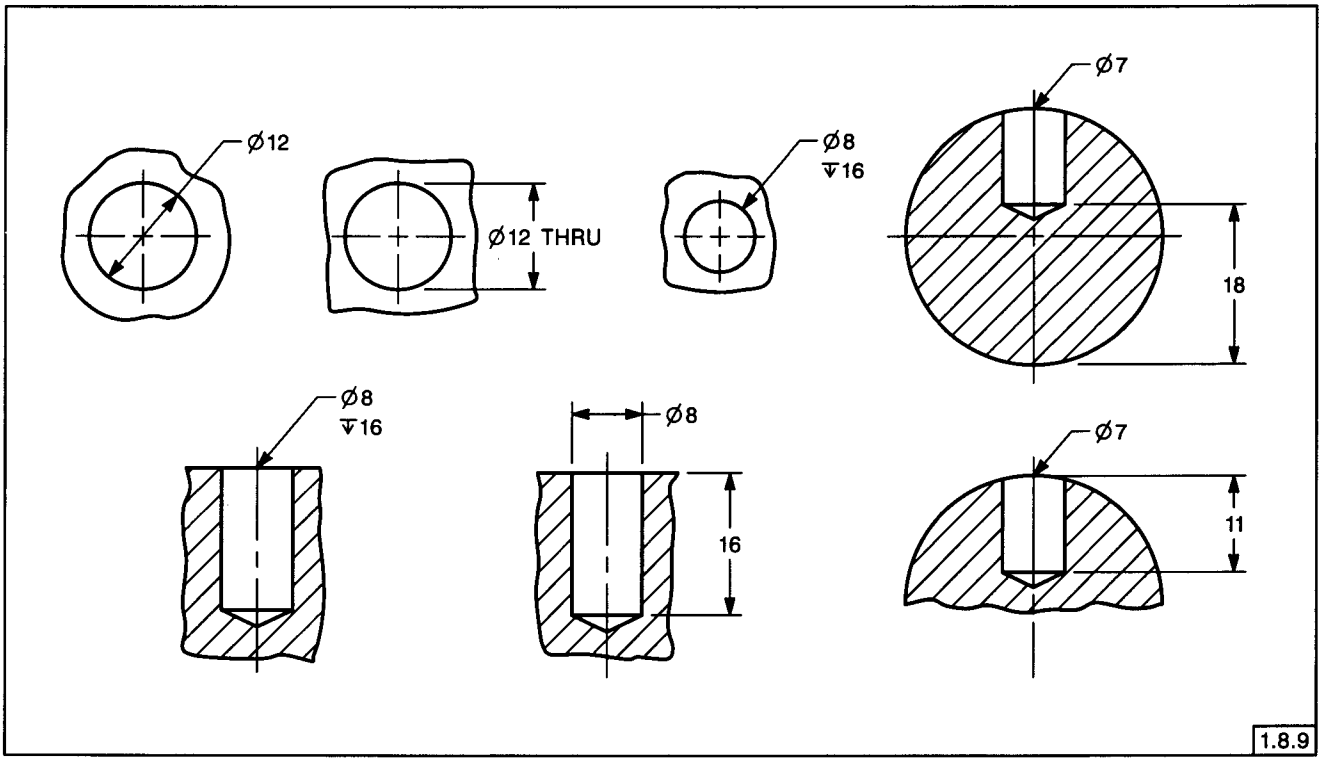

FIG. 1-34 ROUND HOLES

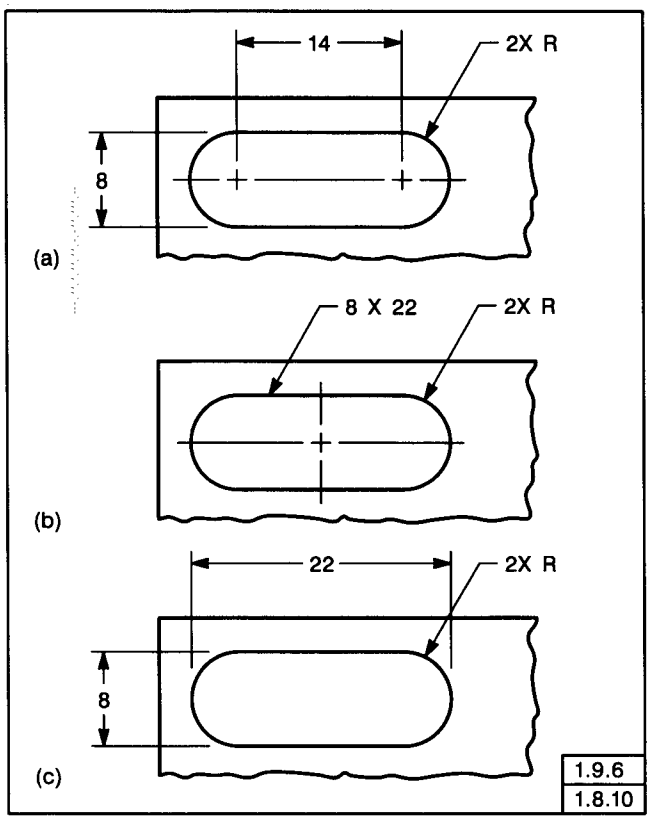

FIG. 1-35 SLOTTED HOLES

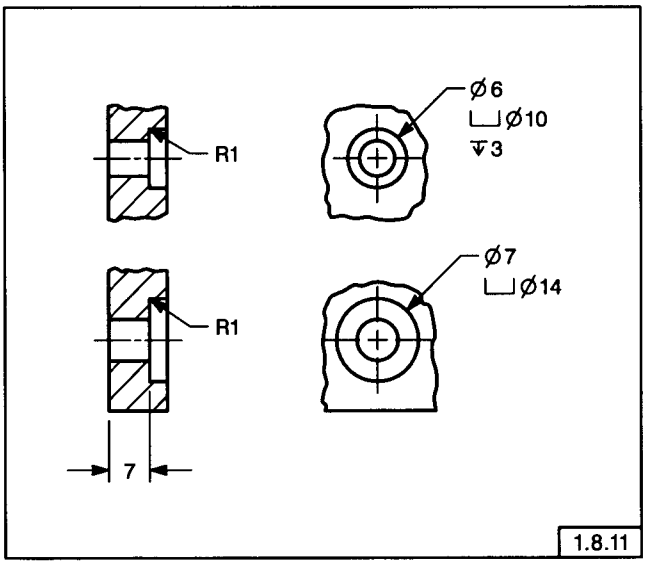

FIG. 1-36 COUNTERBORED HOLES

Copyright ASME International
Provided by IHS under license with ASME
No reproduction or networking permitted without license from IHS
Not for Resale

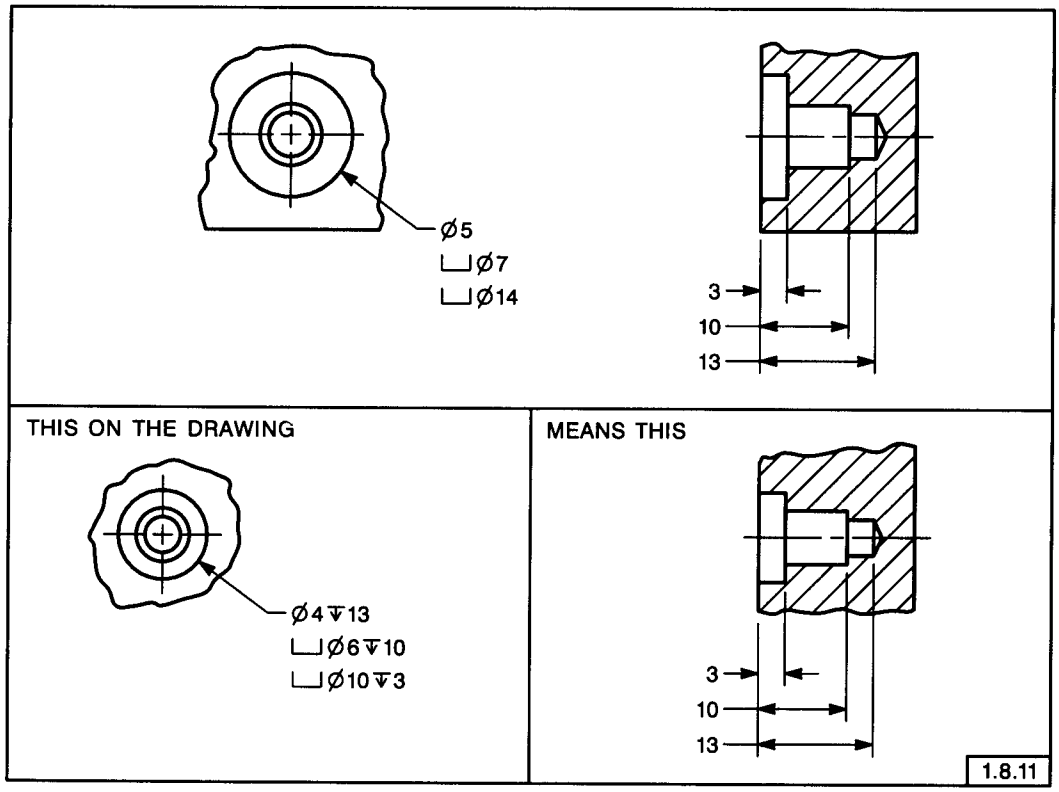

FIG. 1-37 COUNTERBORED HOLES

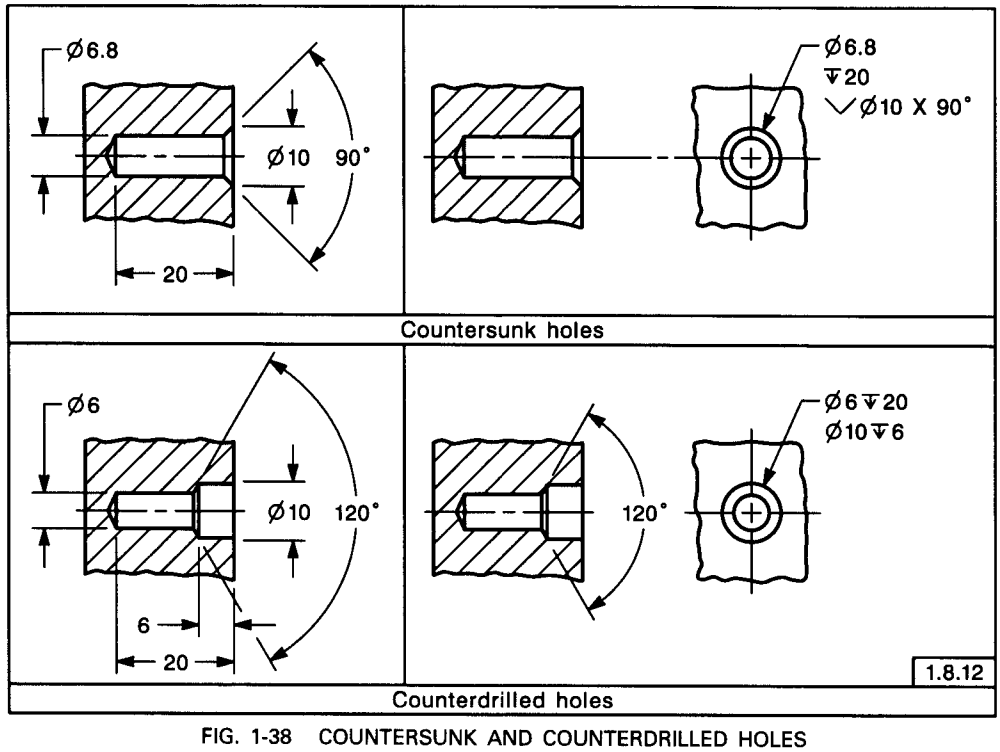

FIG. 1-38 COUNTERSUNK AND COUNTERDRILLED HOLES

Copyright ASME International
Provided by IHS under license with ASME
No reproduction or networking permitted without license from IHS
Not for Resale

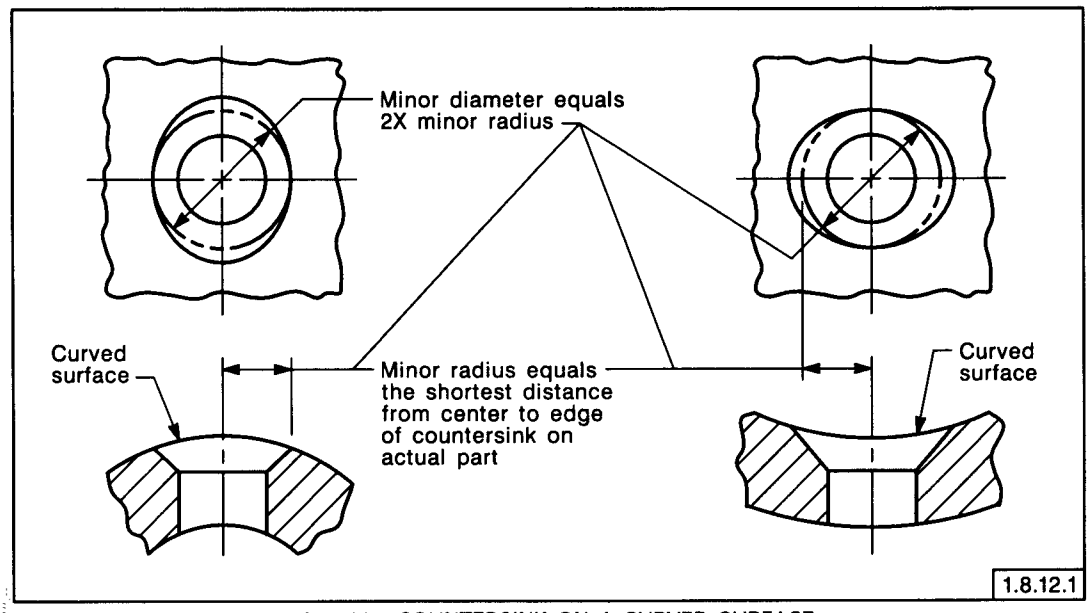

FIG. 1-39 COUNTERSINK ON A CURVED SURFACE

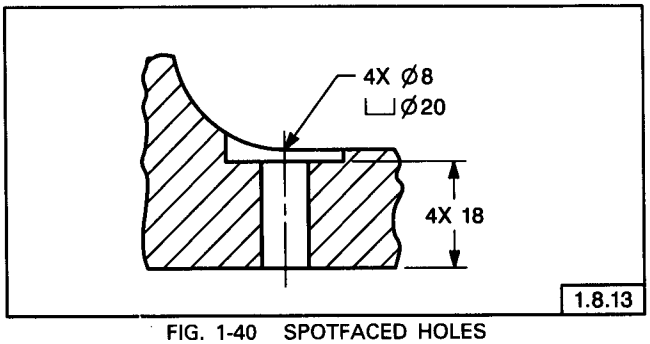

FIG. 1-40 SPOTFACED HOLES

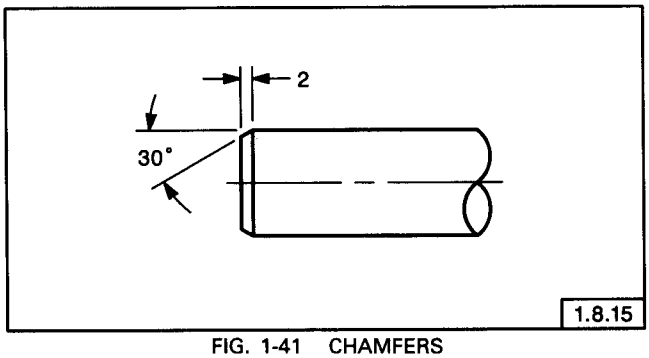

FIG. 1-41 CHAMFERS

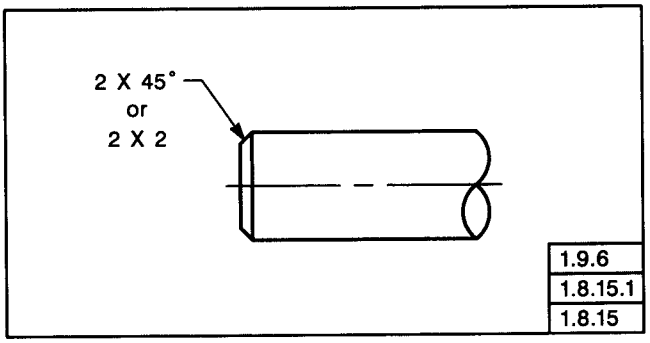

FIG. 1-42 45 DEGREE CHAMFER

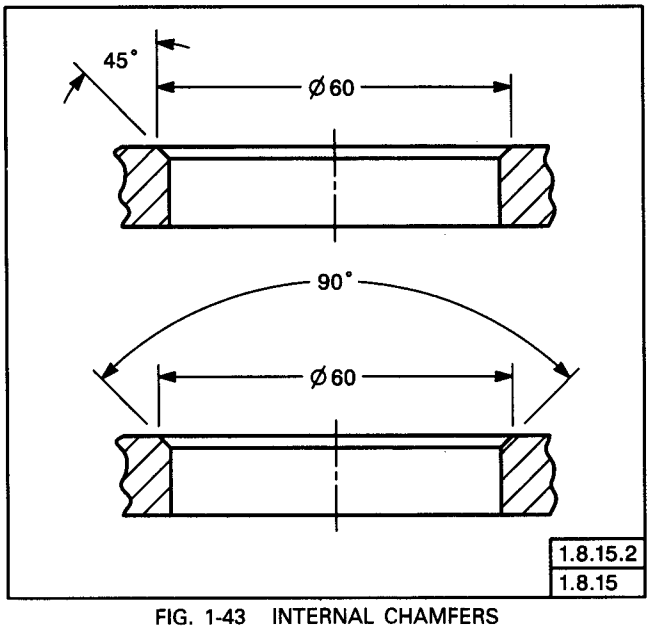

FIG. 1-43 INTERNAL CHAMFERS

Copyright ASME International
Provided by IHS under license with ASME
No reproduction or networking permitted without license from IHS
Not for Resale

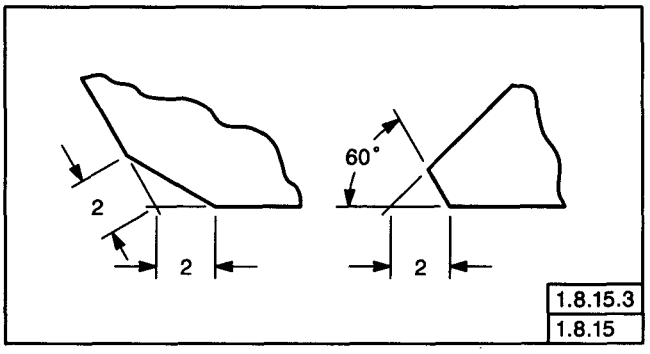

FIG. 1-44 CHAMFERS BETWEEN SURFACES AT OTHER THAN 90 DEGREES

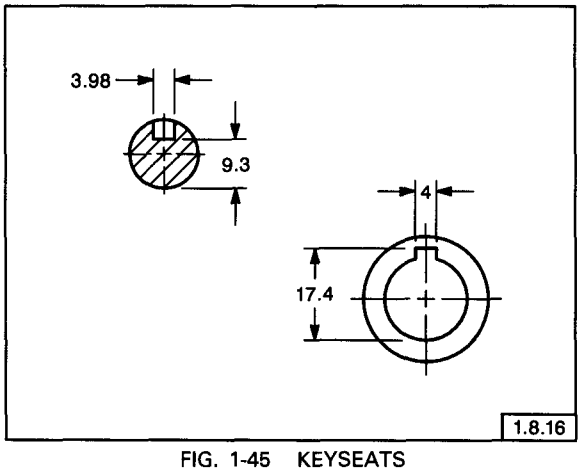

FIG. 1-45 KEYSEATS

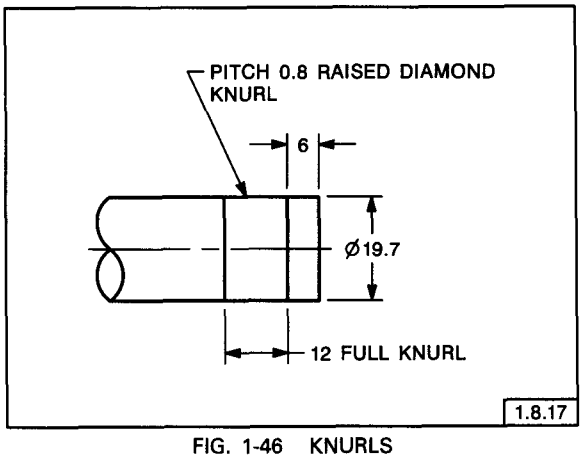

FIG. 1-46 KNURLS

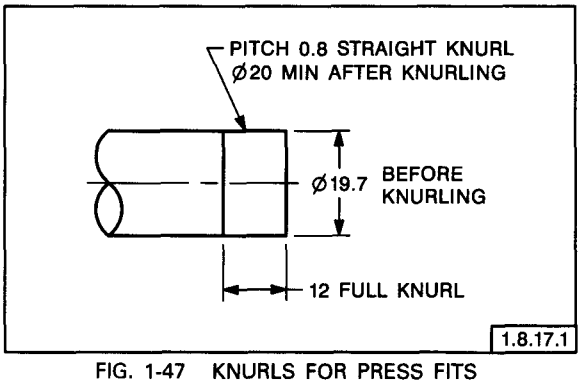

FIG. 1-47 KNURLS FOR PRESS FITS

1.8.17.2 Knurling Standard. For information on inch knurling, see ANSI/ASME B94.6.

1.8.18 Rods and Tubing Details. Rods and tubing are dimensioned in three coordinate directions and toleranced using geometric principles or by specifying the straight lengths, bend radii, angles of bend, and angles of twist for all portions of the item. This may be done by means of auxiliary views, tabulation, or supplementary data.

1.8.19 Screw Threads. Methods of specifying and dimensioning screw threads are covered in ANSI Y14.6 and ANSI Y14.6aM.

1.8.20 Surface Texture. Methods of specifying surface texture requirements are covered in ANSI Y14.36. For additional information, see ANSI/ASME B46.1.

1.8.21 Gears and Involute Splines. Methods of specifying gear requirements are covered in the ASME Y14.7 series of standards. Methods of specifying involute spline requirements are covered in the ANSI B92 series of standards.

1.8.22 Castings and Forgings. Methods of specifying requirements peculiar to castings and forgings are covered in ASME Y14.8M.

1.9 LOCATION OF FEATURES

Rectangular coordinate or polar coordinate dimensions locate features with respect to one another, and as a group or individually, from a datum or an origin. The features that establish this datum or origin must be identified. See para. 5.2.1.3. Round holes or other features of symmetrical contour are located by giving distances, or distances and directions to the feature centers. See Figs. 1-48 through 1-56.

Copyright ASME International
Provided by IHS under license with ASME
No reproduction or networking permitted without license from IHS
Not for Resale

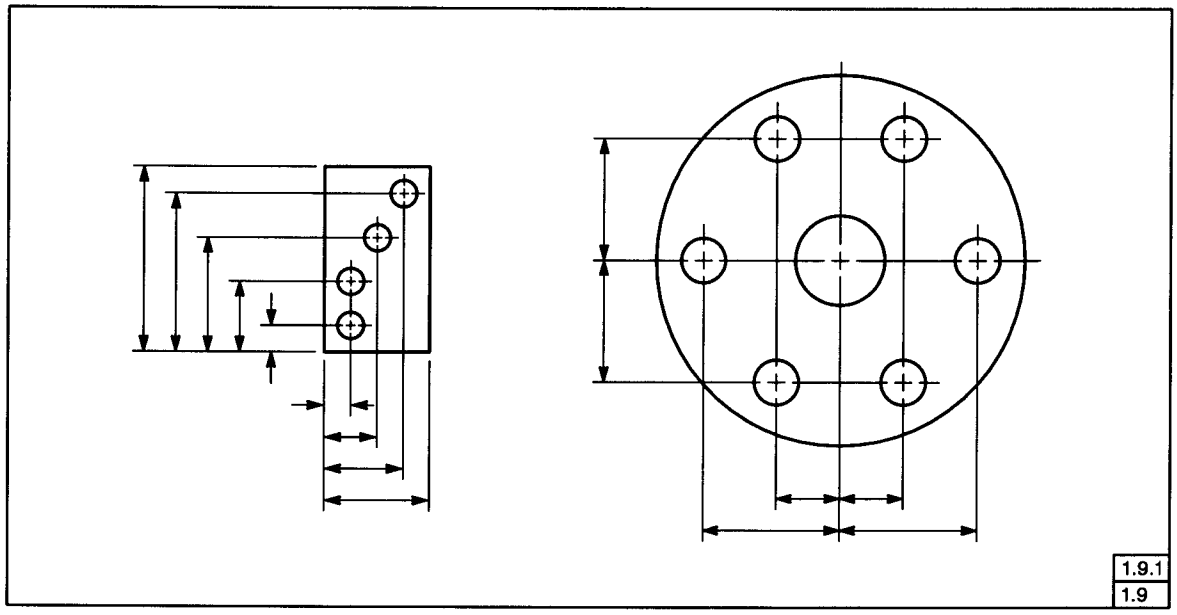

FIG. 1-48 RECTANGULAR COORDINATE DIMENSIONING

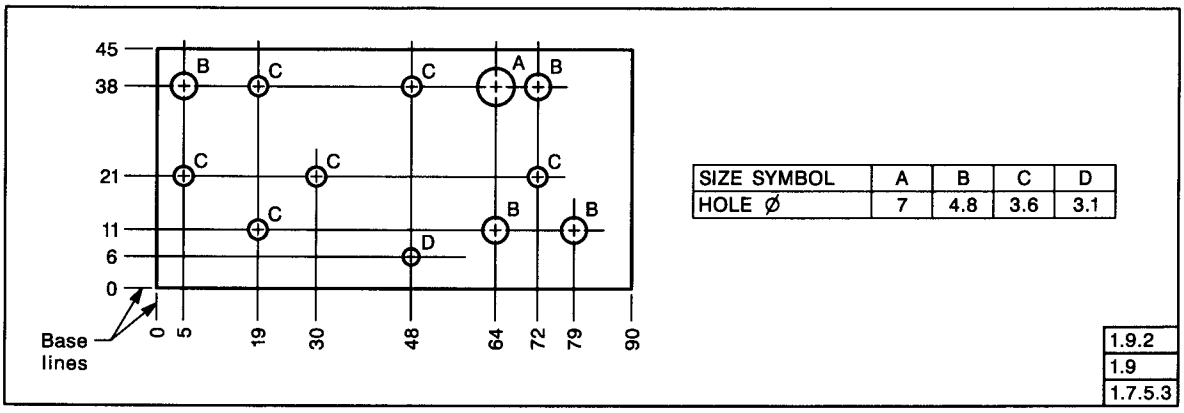

FIG. 1-49 RECTANGULAR COORDINATE DIMENSIONING WITHOUT DIMENSION LINES

1.9.1 Rectangular Coordinate Dimensioning. Where rectangular coordinate dimensioning is used to locate features, linear dimensions specify distances in coordinate directions from two or three mutually perpendicular planes. See Fig. 1-48. Coordinate dimensioning must clearly indicate which features of the part establish these planes. For methods to accomplish this, see Section 4.

1.9.2 Rectangular Coordinate Dimensioning Without Dimension Lines. Dimensions may be shown on extension lines without the use of dimension lines or arrowheads. The base lines are indicated as zero coordinates, or they may be labeled as X, Y, and Z. See Figs. 1-49 and 1-50.

1.9.3 Tabular Dimensioning. Tabular dimensioning is a type of rectangular coordinate dimensioning in which dimensions from mutually perpendicular planes are listed in a table on the drawing, rather than on the pictorial delineation. See Fig. 1-50. This method is used on drawings that require the location of a large number of similarly shaped features. Tables are prepared in any suitable manner that adequately locates the features.

Copyright ASME International
Provided by IHS under license with ASME
No reproduction or networking permitted without license from IHS
Not for Resale

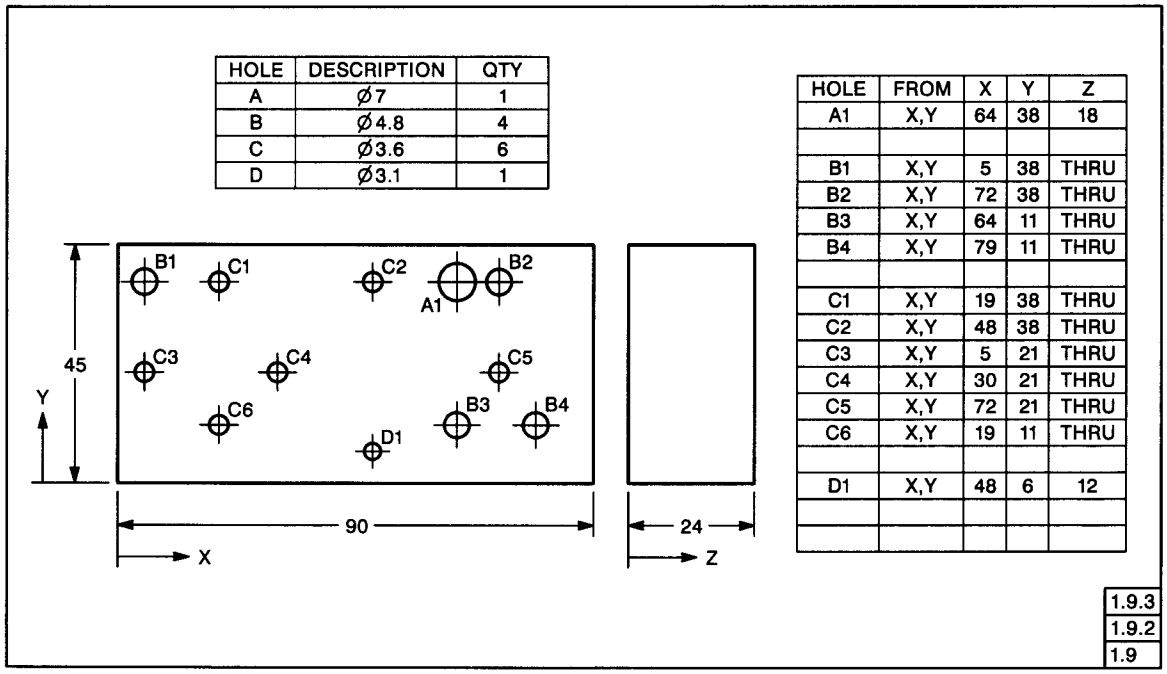

FIG. 1-50 RECTANGULAR COORDINATE DIMENSIONING IN TABULAR FORM

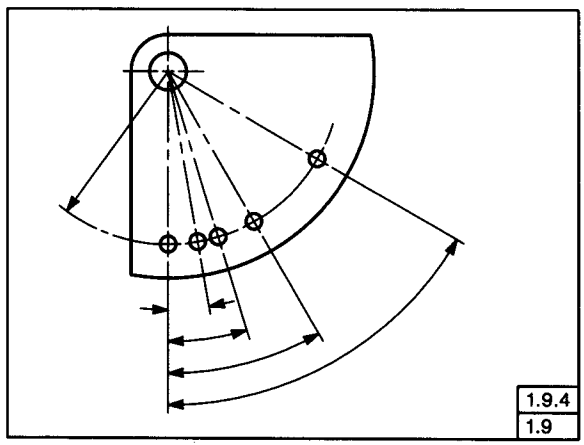

FIG. 1-51 POLAR COORDINATE DIMENSIONING

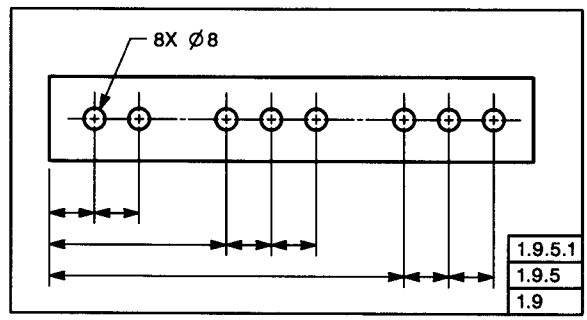

FIG. 1-52 REPETITIVE FEATURES

1.9.4 Polar Coordinate Dimensioning. Where polar coordinate dimensioning is used to locate features, a linear and an angular dimension specifies a distance from a fixed point at an angular direction from two or three mutually perpendicular planes. The fixed point is the intersection of these planes. See Fig. 1-51.

1.9.5 Repetitive Features or Dimensions. Repetitive features or dimensions may be specified by the use of an X in conjunction with a numeral to indicate the "number of places" required. See Figs. 1-52 through 1-56. Where used with a basic dimension, the X may be placed either inside or outside the basic dimension frame. See Figs. 4-26 and 5-14.

1.9.5.1 Series and Patterns. Features, such as holes and slots, that are repeated in a series or pattern, may be specified by giving the required number of features and an X followed by the size dimension of the feature. A space is used between the X and the dimension. See Figs. 1-52 through 1-56.

Copyright ASME International
Provided by IHS under license with ASME
No reproduction or networking permitted without license from IHS
Not for Resale

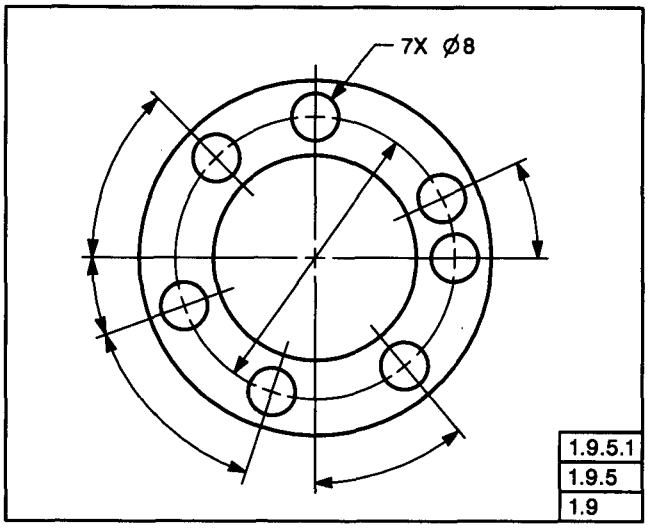

FIG. 1-53 REPETITIVE FEATURES

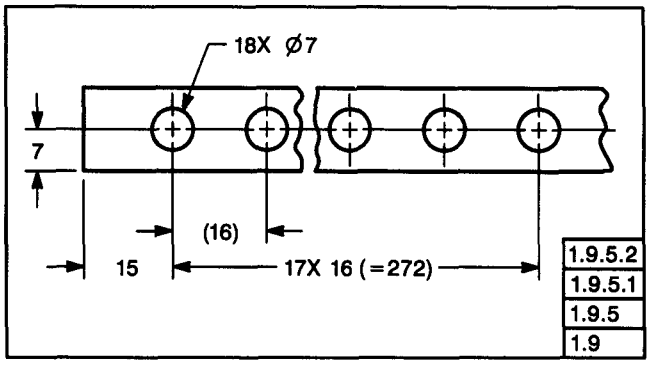

FIG. 1-54 ' REPETITIVE FEATURES AND DIMENSIONS

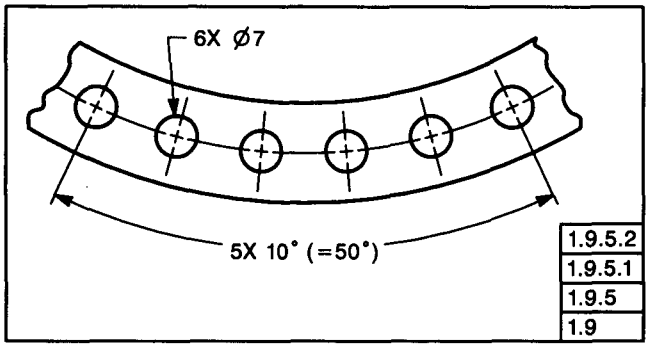

FIG. 1-55 REPETITIVE FEATURES AND DIMENSIONS

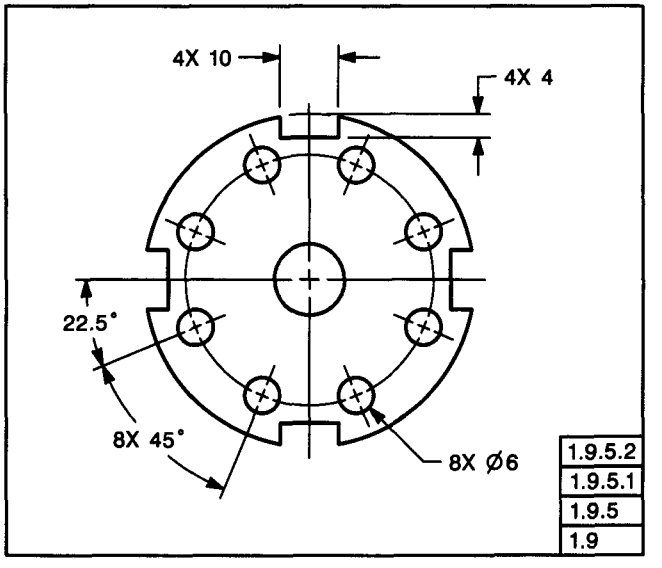

FIG. 1-56 REPETITIVE FEATURES AND DIMENSIONS

1.9.5.2 Spacing. Equal spacing of features in a series or pattern may be specified by giving the required number of spaces and an X, followed by the applicable dimension. A space is used between the X and the dimension. See Figs. 1-54 through 1-56. Where it is difficult to distinguish between the dimension and the number of spaces, as in Fig. 1-54, one space may be dimensioned and identified as reference.

1.9.6 Use of X to Indicate "By." An X may be used to indicate "by" between coordinate dimensions as shown in Figs. 1-35(b) and 1-42. In such cases, the X shall be preceded and followed by one character space.

NOTE: Where the practices described in paras. 1.9.5 and 1.9.6 are used on the same drawing, care must be taken to be sure each usage is clear.

Copyright ASME International
Provided by IHS under license with ASME
No reproduction or networking permitted without license from IHS
Not for Resale

Copyright ASME International
Provided by IHS under license with ASME
No reproduction or networking permitted without license from IHS
Not for Resale

2 General Tolerancing and Related Principles

2.1 GENERAL

This Section establishes practices for expressing tolerances on linear and angular dimensions, applicability of material condition modifiers, and interpretations governing limits and tolerances.

CAUTION: If CAD/CAM database models are used and they do not include tolerances, then tolerances must be expressed outside of the database to reflect design requirements.

2.1.1 Application. Tolerances may be expressed as follows:

(a) as direct limits or as tolerance values applied directly to a dimension (see para. 2.2);

(b) as a geometric tolerance, as described in Sections 5 and 6;

(c) in a note referring to specific dimensions;

(d) as specified in other documents referenced on the drawing for specific features or processes;

(e) in a general tolerance block referring to all dimensions on a drawing for which tolerances are not otherwise specified; see ANSI Y14.1

2.1.1.1 Positional Tolerancing Method. Preferably, tolerances on dimensions that locate features of size are specified by the positional tolerancing method described in Section 5. In certain cases, such as locating irregular-shaped features, the profile tolerancing method described in Section 6 may be used.

2.1.1.2 Implied 90° Angle. By convention, where center lines and surfaces of features of a part are depicted on engineering drawings intersecting at right angles, a 90° angle is not specified. Implied 90° angles are understood to apply. The tolerance on these implied 90° angles is the same as for all other angular features shown on the field of the drawing governed by general angular tolerance notes or general tolerance block values. Where center lines and surfaces of a part are depicted on engineering drawings intersecting at right angles and basic dimensions or geometric controls have been specified, implied 90° basic angles are understood to apply. The tolerance on the feature associated with these implied 90° basic angles is provided by feature control frames

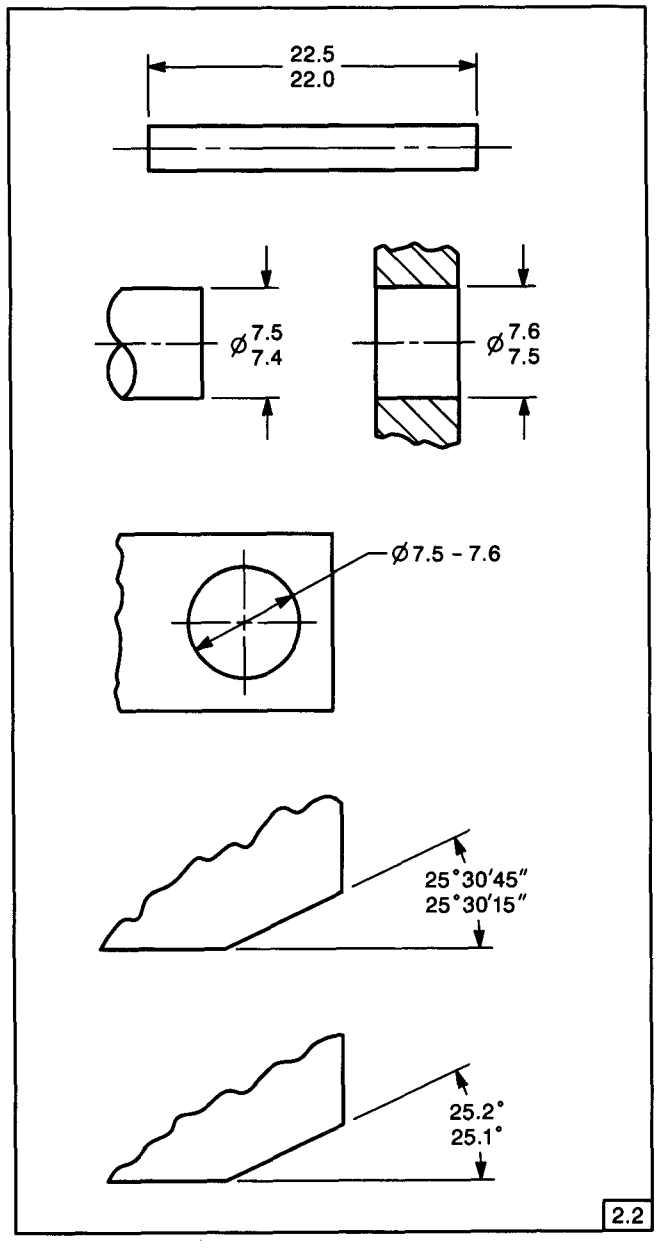

FIG. 2-1 LIMIT DIMENSIONING

Copyright ASME International
Provided by IHS under license with ASME
No reproduction or networking permitted without license from IHS
Not for Resale

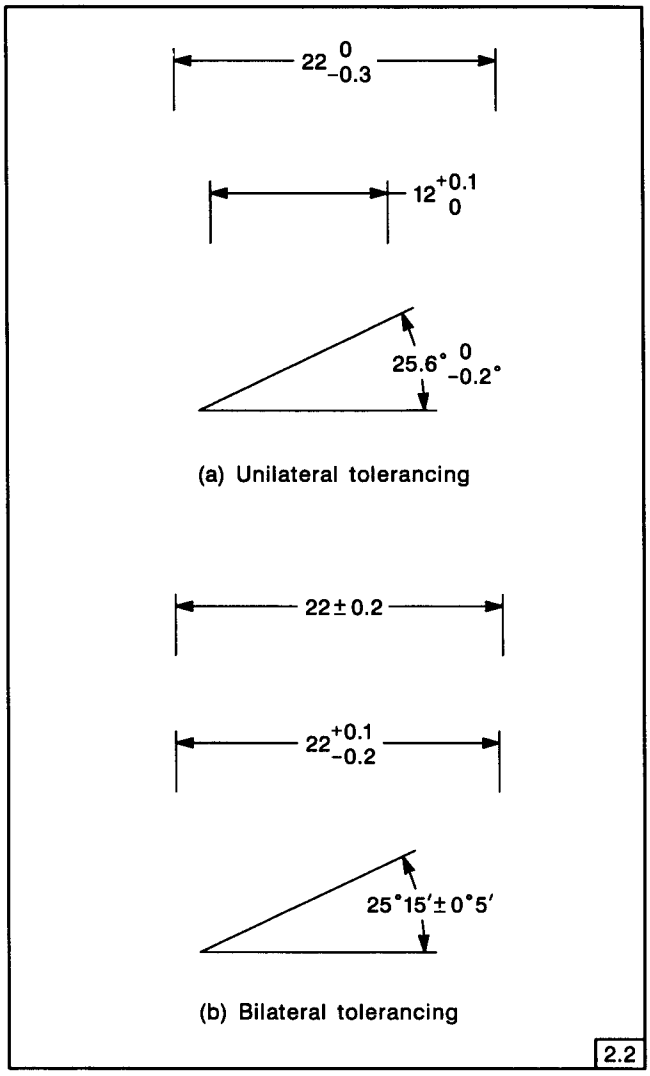

FIG. 2-2 PLUS AND MINUS TOLERANCING

that govern the location, orientation, profile, or runout of features of the part. See paras. 1.4 (i) and (j).

2.2 DIRECT TOLERANCING METHODS

Limits and directly applied tolerance values are specified as follows.

(a) Limit Dimensioning. The high limit (maximum value) is placed above the low limit (minimum value). When expressed in a single line, the low limit precedes the high limit and a dash separates the two values. See Fig. 2-1.

(b) Plus and Minus Tolerancing. The dimension is given first and is followed by a plus and minus expression of tolerance. See Fig. 2-2.

2.2.1 Metric Limits and Fits For metric application of limits and fits, the tolerance may be indicated by a basic size and tolerance symbol as in Fig. 2-3. See ANSI B4.2 for complete information on this system.

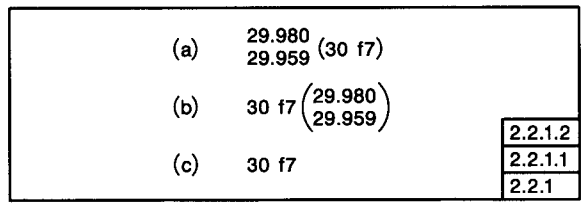

FIG. 2-3 INDICATING SYMBOLS FOR METRIC LIMITS AND FITS

2.2.1.1 Limits and Tolerance Symbols. The method shown in Fig. 2-3(a) is recommended when the system is introduced by an organization. In this case, limit dimensions are specified, and the basic size and tolerance symbol are identified as reference.

2.2.1.2 Tolerance Symbol and Limits. As experience is gained, the method shown in Fig. 2-3(b) may be used. When the system is established and standard tools, gages, and stock materials are available with size and symbol identification, the method shown in Fig. 2-3(c) may be used.

2.3 TOLERANCE EXPRESSION

The conventions shown in the following paragraphs shall be observed pertaining to the number of decimal places carried in the tolerance.

2.3.1 Millimeter Tolerances. Where millimeter dimensions are used on the drawings, the following apply.

(a) Where unilateral tolerancing is used and either the plus or minus value is nil, a single zero is shown without a plus or minus sign.

EXAMPLE:

$32^{0}_{-0.02}$ or $32^{+0.02}_{0}$

(b) Where bilateral tolerancing is used, both the plus and minus values have the same number of decimal places, using zeros where necessary.

EXAMPLE:

$32^{+0.25}_{-0.10}$ not $32^{+0.25}_{-0.1}$

(c) Where limit dimensioning is used and either the maximum or minimum value has digits following a decimal point, the other value has zeros added for uniformity.

Copyright ASME International
Provided by IHS under license with ASME
No reproduction or networking permitted without license from IHS
Not for Resale

EXAMPLE:

25.45	not	25.45
25.00		25

(d) Where basic dimensions are used, associated tolerances contain the number of decimal places necessary for control. The basic dimension value observes the practices of para. 1.6.1.

EXAMPLE:

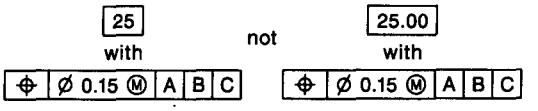

2.3.2 Inch Tolerances. Where inch dimensions are used on the drawing, the following apply:

(a) Where unilateral tolerancing is used and either the plus or minus value is nil, its dimension shall be expressed with the same number of decimal places, and the appropriate plus or minus sign.

EXAMPLE:

$.500^{+.005}_{-.000}$	not	$.500^{+.005}_{0}$

(b) Where bilateral tolerancing is used, both the plus and minus values and the dimension have the same number of decimal places.

EXAMPLE:

.500 ±.005	not	.50 ±.005

(c) Where limit dimensioning is used and either the maximum or minimum value has digits following a decimal point, the other value has zeros added for uniformity.

EXAMPLE:

.750	not	.75
.748		.748

(d) Where basic dimensions are used, associated tolerances contain the number of decimal places necessary for control. The basic dimension value is expressed with the same number of decimal places as the tolerance.

EXAMPLE:

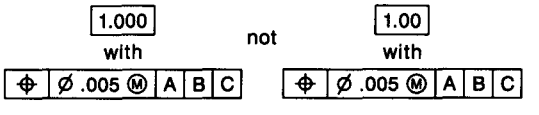

2.3.3 Angle Tolerances. Where angle dimensions are used, both the plus and minus values and the angle have the same number of decimal places.

EXAMPLE:

25.0° ±.2°	not	25° ±.2°

2.4 INTERPRETATION OF LIMITS

All limits are absolute. Dimensional limits, regardless of the number of decimal places, are used as if they were continued with zeros.

EXAMPLES:

12.2	means	12.20...0
12.0	means	12.00...0
12.01	means	12.010...0

To determine conformance within limits, the measured value is compared directly with the specified value and any deviation outside the specified limiting value signifies nonconformance with the limits.

2.4.1 Plated or Coated Parts. Where a part is to be plated or coated, the drawing or referenced document shall specify whether the dimensions are before or after plating. Typical examples of notes are the following:

(a) DIMENSIONAL LIMITS APPLY AFTER PLATING.

(b) DIMENSIONAL LIMITS APPLY BEFORE PLATING.

(For processes other than plating, substitute the appropriate term.)

2.5 SINGLE LIMITS

MIN or MAX is placed after a dimension where other elements of the design definitely determine the other unspecified limit. Features, such as depths of holes, lengths of threads, corner radii, chamfers, etc., may be limited in this way. Single limits are used where the intent will be clear, and the unspecified limit can be zero or approach infinity and will not result in a condition detrimental to the design.

2.6 TOLERANCE ACCUMULATION

Figure 2-4 compares the tolerance values resulting from three methods of dimensioning.

(a) Chain Dimensioning. The maximum variation between two features is equal to the sum of the tolerances on the intermediate distances; this results in the greatest tolerance accumulation. In Fig. 2-4(a), the tolerance accumulation between surfaces X and Y is ±0.15.

(b) Base Line Dimensioning. The maximum variation between two features is equal to the sum of the tolerances on the two dimensions from their origin to the features; this results in a reduction of the tolerance accumulation. In Fig. 2-4(b), the tolerance accumulation between surfaces X and Y is ±0.1.

(c) Direct Dimensioning. The maximum variation between two features is controlled by the tolerance on the dimension between the features; this results in the least tolerance. In Fig. 2-4(c), the tolerance between surfaces X and Y is ±0.05.

Copyright ASME International
Provided by IHS under license with ASME
No reproduction or networking permitted without license from IHS
Not for Resale

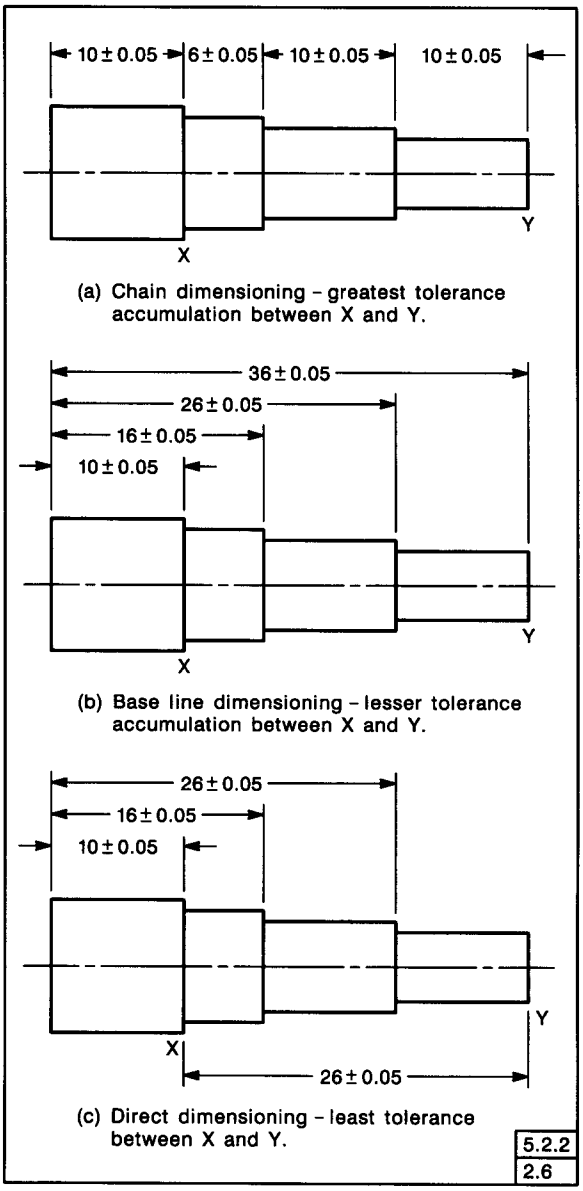

FIG. 2-4 TOLERANCE ACCUMULATION

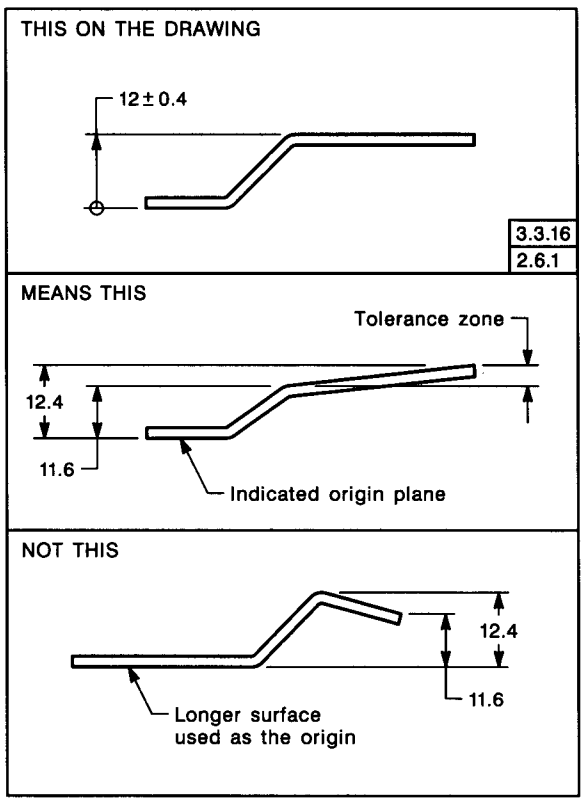

FIG. 2-5 RELATING DIMENSIONAL LIMITS TO AN ORIGIN

2.6.1 Dimensional Limits Related to an Origin. In certain cases, it is necessary to indicate that a dimension between two features shall originate from one of these features and not the other. The high points of the surface indicated as the origin define a plane for measurement. The dimensions related to the origin are taken from the plane or axis and define a zone within which the other features must lie. This concept does not establish a datum reference frame as described in Section 4. Such a case is illustrated in Fig. 2-5, where a part having two parallel surfaces of unequal length is to be mounted on the shorter surface. In this example, the dimension origin symbol described in para. 3.3.16 signifies that the dimension originates from the plane established by the shorter surface and dimensional limits apply to the other surface. Without such indication, the longer surface could have been selected as the origin, thus permitting a greater angular variation between surfaces.

2.7 LIMITS OF SIZE

Unless otherwise specified, the limits of size of a feature prescribe the extent within which variations of geometric form, as well as size, are allowed. This control applies solely to individual features of size as defined in para. 1.3.17.

2.7.1 Individual Feature of Size (Rule #1). Where only a tolerance of size is specified, the limits of size of an individual feature prescribe the extent to which variations in its geometric form, as well as size, are allowed.

Copyright ASME International
Provided by IHS under license with ASME
No reproduction or networking permitted without license from IHS
Not for Resale

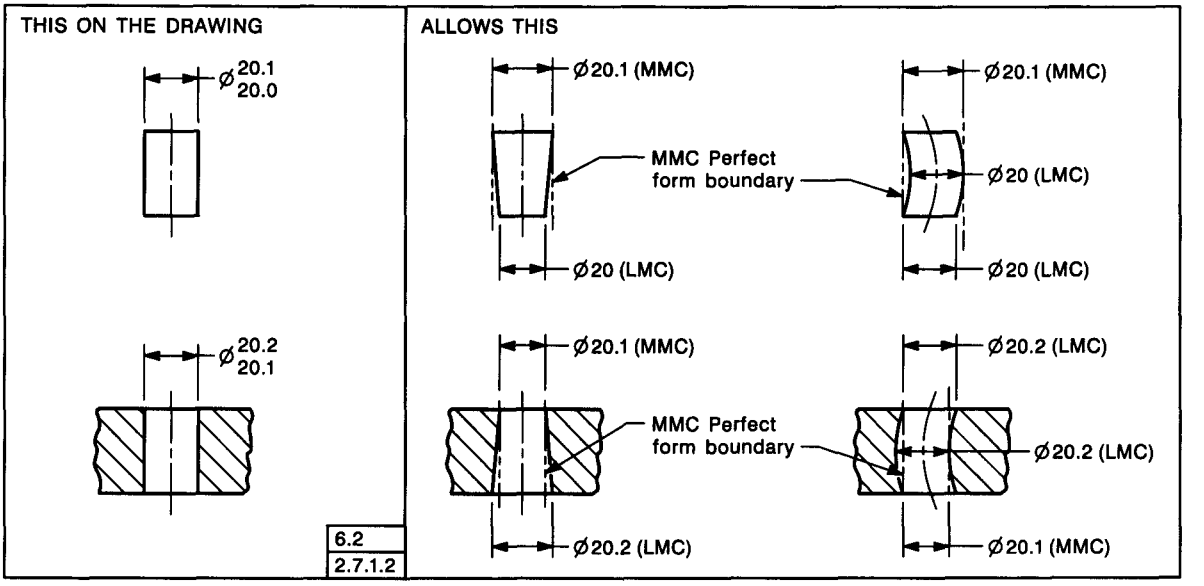

FIG. 2-6 EXTREME VARIATIONS OF FORM ALLOWED BY A SIZE TOLERANCE

2.7.1.1 Variations of Size. The actual local size of an individual feature at each cross section shall be within the specified tolerance of size.

2.7.1.2 Variations of Form (Envelope Principle). The form of an individual feature is controlled by its limits of size to the extent prescribed in the following paragraphs and illustrated in Fig. 2-6.

(a) The surface or surfaces of a feature shall not extend beyond a boundary (envelope) of perfect form at MMC. This boundary is the true geometric form represented by the drawing. No variation in form is permitted if the feature is produced at its MMC limit of size except as specified in para. 6.4.1.1.2.

(b) Where the actual local size of a feature has departed from MMC toward LMC, a variation in form is allowed equal to the amount of such departure.

(c) There is no requirement for a boundary of perfect form at LMC. Thus, a feature produced at its LMC limit of size is permitted to vary from true form to the maximum variation allowed by the boundary of perfect form at MMC.

2.7.1.3 Form Control Does Not Apply (Exceptions to Rule #1). The control of geometric form prescribed by limits of size does not apply to the following:

(a) stock, such as bars, sheets, tubing, structural shapes, and other items produced to established industry or government standards that prescribe limits for straightness, flatness, and other geometric characteristics. Unless geometric tolerances are specified on the drawing of a part made from these items, standards for these items govern the surfaces that remain in the as-furnished condition on the finished part.

(b) parts subject to free state variation in the unrestrained condition. See para. 6.8.

2.7.2 Perfect Form at MMC Not Required. Where it is desired to permit a surface or surfaces of a feature to exceed the boundary of perfect form at MMC, a note such as PERFECT FORM AT MMC NOT REQD is specified, exempting the pertinent size dimension from the provision of para. 2.7.1.2(a).

2.7.3 Relationship Between Individual Features. The limits of size do not control the orientation or location relationship between individual features. Features shown perpendicular, coaxial, or symmetrical to each other must be controlled for location or orientation to avoid incomplete drawing requirements. These controls may be specified by one of the methods given in Sections 5 and 6. If it is necessary to establish a boundary of perfect form at MMC to control the relationship between features, the following methods are used.

(a) Specify a zero tolerance of orientation at MMC, including a datum reference (at MMC if ap-

Copyright ASME International
Provided by IHS under license with ASME
No reproduction or networking permitted without license from IHS
Not for Resale

plicable), to control angularity, perpendicularity, or parallelism of the feature. See para. 6.6.1.2.

(b) Specify a zero positional tolerance at MMC, including a datum reference (at MMC if applicable) to control coaxial or symmetrical features. See paras. 5.11.1.3 and 5.13.2.

(c) Indicate this control for the features involved by a note such as PERFECT ORIENTATION (or COAXIALITY or LOCATION OF SYMMETRICAL FEATURES) AT MMC REQUIRED FOR RELATED FEATURES.

(d) Relate dimensions to a datum reference frame by a local or general note indicating datum precedence. See para. 4.4. The noted dimensions define only the maximum material condition envelope related to the datum reference frame defined by the datums. For LMC, see para. 2.7.1.2(c).

2.8 APPLICABILITY OF RFS, MMC, AND LMC

Applicability of RFS, MMC, and LMC is limited to features subject to variations in size. They may be datum features or other features whose axes or center planes are controlled by geometric tolerances. In the case of straightness covered in paras. 6.4.1.1.2 and 6.4.1.1.3, it is the derived median line and the derived median plane, rather than the axis and center plane that are controlled. In all cases, the following practices apply for indicating RFS, MMC, and LMC:

(a) All Applicable Geometric Tolerances (Rule #2). RFS applies, with respect to the individual tolerance, datum reference, or both, where no modifying symbol is specified. MMC or LMC must be specified on the drawing where it is required.

NOTE: Circular runout, total runout, concentricity, and symmetry are applicable only on an RFS basis and cannot be modified to MMC or LMC.

(b) Alternative Practice. For a tolerance of position (Rule #2a), RFS may be specified on the drawing with respect to the individual tolerance, datum reference, or both, as applicable. See Appendix D (Fig. D-1).

2.8.1 Effect of RFS. Where a geometric tolerance is applied on an RFS basis, the specified tolerance is independent of the actual size of the considered feature. The tolerance is limited to the specified value regardless of the actual size of the feature. Likewise, referencing a datum feature on an RFS basis means that a centering about its axis or center plane is necessary, regardless of the actual size of the feature.

2.8.2 Effect of MMC. Where a geometric tolerance is applied on an MMC basis, the allowed tolerance is dependent on the actual mating size of the considered feature. The tolerance is limited to the specified value if the feature is produced at its MMC limit of size. Where the actual mating size of the feature has departed from MMC, an increase in the tolerance is allowed equal to the amount of such departure. The total permissible variation in the specific geometric characteristic is maximum when the feature is at LMC. Likewise, referencing a datum feature on an MMC basis means the datum is the axis or center plane of the feature at the MMC limit. Where the actual mating size of the datum feature has departed from MMC, a deviation is allowed between its axis or center plane and the axis or center plane of the datum.

2.8.3 Effect of Zero Tolerance at MMC. Where a tolerance of position or orientation is applied on a zero tolerance at MMC basis, the tolerance is totally dependent on the actual mating size of the considered feature. No tolerance of position or orientation is allowed if the feature is produced at its MMC limit of size; and in this case, it must be located at true position or be perfect in orientation, as applicable. Where the actual mating size of the considered feature has departed from MMC, a tolerance is allowed equal to the amount of such departure. The total permissible variation in position or orientation is maximum when the feature is at LMC, unless a maximum is specified. See Figs. 6-41 and 6-42.

2.8.4 Effect of LMC. Where a positional tolerance is applied on an LMC basis, the allowed tolerance is dependent on the actual mating size of the considered feature. The tolerance is limited to the specified value if the feature is produced at its LMC limit of size. Where the actual mating size of the feature has departed from LMC, an increase in the tolerance is allowed equal to the amount of such departure. The total permissible variation in position is maximum when the feature is at MMC. Likewise, referencing a datum feature on an LMC basis means the datum is the axis or center plane of the feature at the LMC limit. Where the actual mating size of the datum feature has departed from LMC, a deviation is allowed between its axis or center plane and the axis or center plane of the datum.

2.8.5 Effect of Zero Tolerance at LMC. Where a tolerance of position or orientation is applied on a zero tolerance at LMC basis, the tolerance is totally dependent on the size of the considered feature. No tolerance of position or orientation is allowed if the

Copyright ASME International
Provided by IHS under license with ASME
No reproduction or networking permitted without license from IHS
Not for Resale

feature is produced at its LMC limit of size; and in this case, it must be located at true position or be perfect in orientation, as applicable. Where the actual mating size of the considered feature has departed from LMC, a tolerance is allowed equal to the amount of such departure. The total permissible variation in position or orientation is maximum when the feature is at MMC unless a maximum is specified. See Figs. 5-13, 5-14, and 6-42.

2.9 SCREW THREADS

Each tolerance of orientation or position and datum reference specified for a screw thread applies to the axis of the thread derived from the pitch cylinder. Where an exception to this practice is necessary, the specific feature of the screw thread (such as MAJOR DIA or MINOR DIA) shall be stated beneath the feature control frame, or beneath or adjacent to the datum feature symbol, as applicable. See Fig. 5-62.

2.10 GEARS AND SPLINES

Each tolerance of orientation or position and datum reference specified for features other than screw threads, such as gears and splines, must designate the specific feature of the gear or spline to which each applies (such as MAJOR DIA, PITCH DIA, or MINOR DIA). This information is stated beneath the feature control frame or beneath the datum feature symbol, as applicable.

2.11 VIRTUAL/RESULTANT CONDITION

Depending upon its function, a feature is controlled by size and applicable geometric controls. Material condition (MMC or LMC) may also be applicable. Consideration must be given to the collective effects of MMC and applicable tolerances in determining the clearance between parts (fixed or floating fastener formula) and in establishing gage feature sizes. Consideration must be given to the collective effects of LMC and applicable tolerances in determining guaranteed area of contact, thin wall conservation, and alignment hole location in establishing gage feature sizes.

2.11.1 Virtual Condition. From para. 2.11 considerations, constant value outer locus and constant value inner locus values are derived and termed *virtual condition*. See Figs. 2-7 through 2-12.

2.11.2 Resultant Condition. From para. 2.11 considerations, the worst case inner locus and worst case outer locus values are derived and termed *resultant condition*. See Figs. 2-7 through 2-12.

2.11.3 Datum Features at Virtual Condition. A virtual condition exists for a datum feature of size where its axis or center plane is controlled by a geometric tolerance. In such cases, the datum feature applies at its virtual condition even though it is referenced in a feature control frame at MMC or LMC. Where a virtual condition equal to the maximum material condition or the least material condition is the design requirement, a zero tolerance at MMC or LMC is specified. See Sections 4, 5, and 6.

2.12 ANGULAR SURFACES

Where an angular surface is defined by a combination of a linear dimension and an angle, the surface must lie within a tolerance zone represented by two nonparallel planes. See Fig. 2-13. The tolerance zone will widen as the distance from the apex of the angle increases. Where a tolerance zone with parallel boundaries is desired, a basic angle may be specified as in Fig. 2-14. The dimensions related to the origin are then used in the same manner described in para. 2.6.1. Additionally, an angularity tolerance may be specified within these boundaries. See Fig. 6-27.

2.13 CONICAL TAPERS

Conical tapers include the category of standard machine tapers used throughout the tooling industry, classified as American Standard Self-Holding and Steep Taper series. See ANSI B5.10. American Standard machine tapers are usually dimensioned by specifying the taper name and number. See Fig. 2-16(b). The diameter at the gage line and the length may also be specified. The taper in inches per foot and the diameter of the small end may be shown as reference. A conical taper may also be specified by one of the following methods:

(a) a basic taper and a basic diameter (see Fig. 2-15);

(b) a size tolerance combined with a profile of a surface tolerance applied to the taper (see para. 6.5.8);

(c) a toleranced diameter at both ends of a taper and a toleranced length. See Fig. 2-16(a).

NOTE: The method described in (c) above is applicable for noncritical tapers, such as the transition between diameters of a shaft.

(d) a composite profile tolerance.

Copyright ASME International
Provided by IHS under license with ASME
No reproduction or networking permitted without license from IHS
Not for Resale

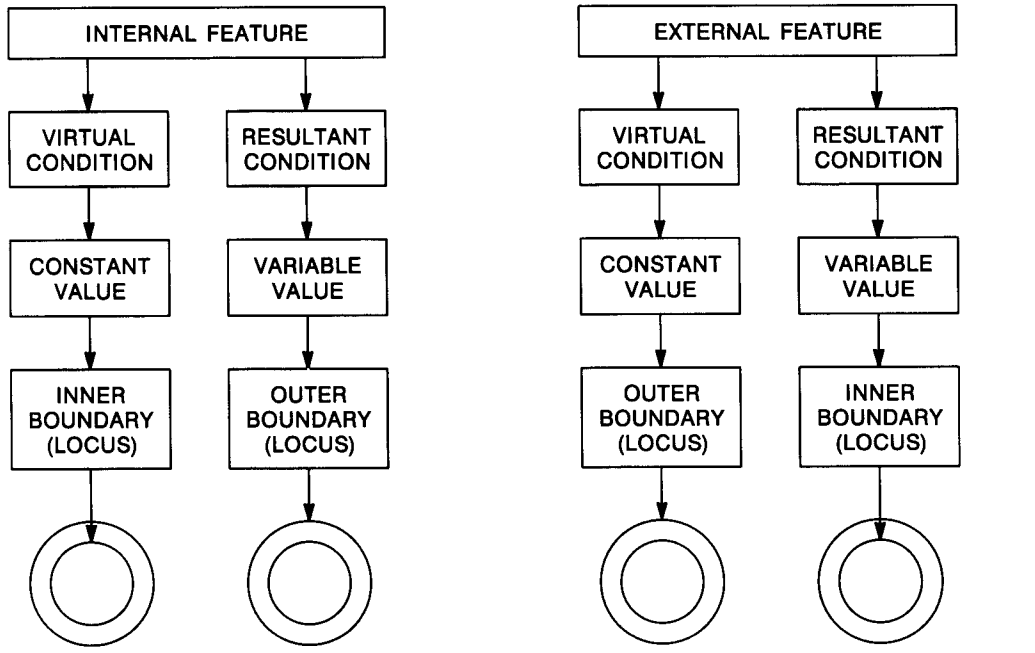

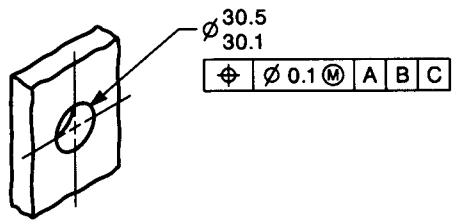

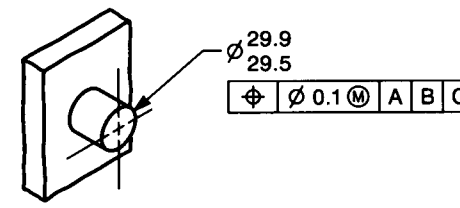

	Ø HOLE	Ø TOL	V COND	R COND
LMC	30.5	0.5		31.0
	30.4	0.4		30.8
	30.3	0.3	30.0	30.6
	30.2	0.2		30.4
MMC	30.1	0.1		30.2

	Ø PIN	Ø TOL	V COND	R COND
MMC	29.9	0.1		29.8
	29.8	0.2		29.6
	29.7	0.3	30.0	29.4
	29.6	0.4		29.2
LMC	29.5	0.5		29.0

The virtual condition of an internal feature is a constant value equal to its maximum material condition size MINUS its applicable tolerance of location.

The resultant condition of an internal feature is a variable value equal to its actual mating envelope size PLUS its applicable tolerance of location.

The virtual condition of an external feature is a constant value equal to its maximum material condition size PLUS its applicable tolerance of location.

The resultant condition of an external feature is a variable value equal to its actual mating envelope size MINUS its applicable tolerance of location.

2.11.2
2.11.1

FIG. 2-7 MMC CONCEPT — VIRTUAL AND RESULTANT CONDITION

Copyright ASME International
Provided by IHS under license with ASME
No reproduction or networking permitted without license from IHS
Not for Resale

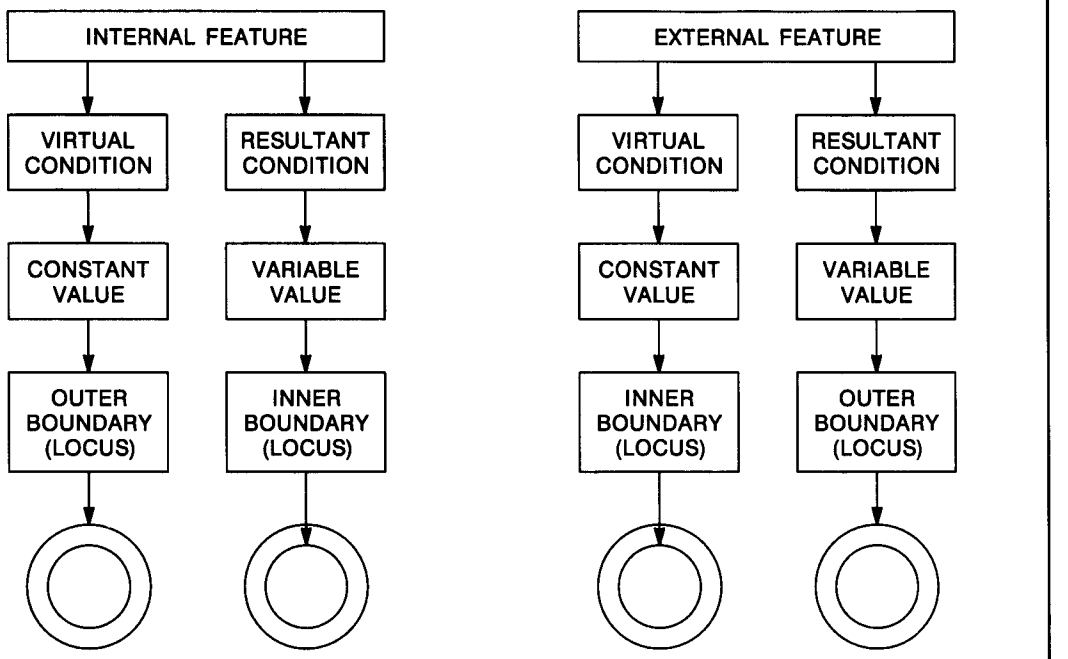

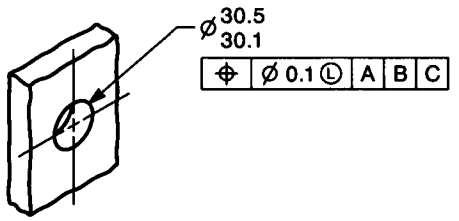

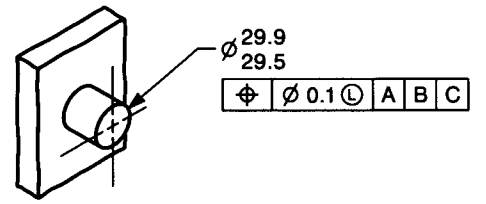

	Ø HOLE	Ø TOL	V COND	R COND
LMC	30.5	0.1		30.4
	30.4	0.2		30.2
	30.3	0.3	30.6	30.0
	30.2	0.4		29.8
MMC	30.1	0.5		29.6

	Ø PIN	Ø TOL	V COND	R COND
MMC	29.9	0.5		30.4
	29.8	0.4		30.2
	29.7	0.3	29.4	30.0
	29.6	0.2		29.8
LMC	29.5	0.1		29.6

The virtual condition of an internal feature is a constant value equal to its least material condition size PLUS its applicable tolerance of location.

The resultant condition of an internal feature is a variable value equal to its actual mating envelope size MINUS its applicable tolerance of location.

The virtual condition of an external feature is a constant value equal to its least material condition size MINUS its applicable tolerance of location.

The resultant condition of an external feature is a variable value equal to its actual mating envelope size PLUS its applicable tolerance of location.

2.11.2
2.11.1

FIG. 2-8 LMC CONCEPT — VIRTUAL AND RESULTANT CONDITION

Copyright ASME International
Provided by IHS under license with ASME
No reproduction or networking permitted without license from IHS
Not for Resale

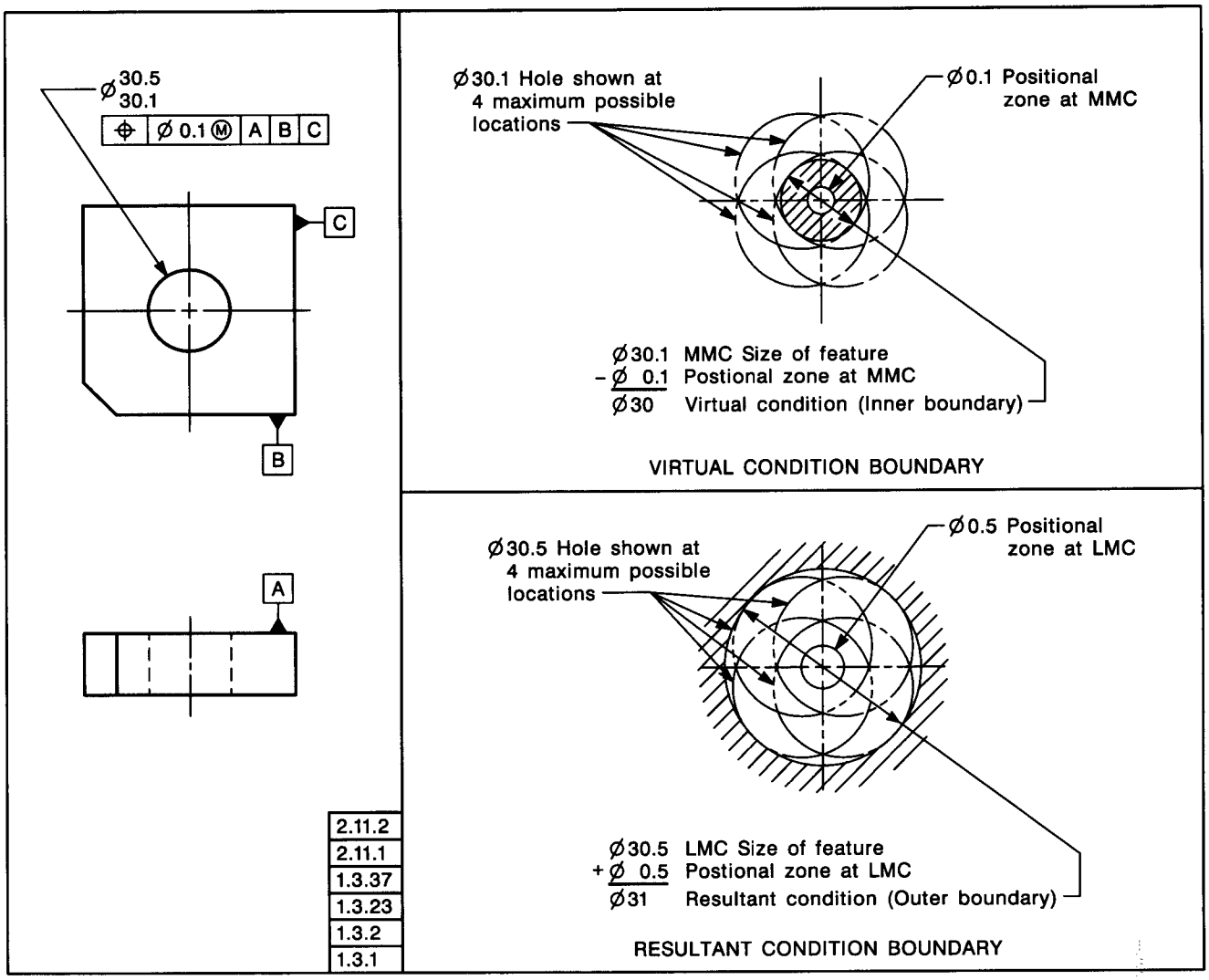

FIG. 2-9 VIRTUAL AND RESULTANT CONDITION BOUNDARIES USING MMC CONCEPT — INTERNAL FEATURE

Copyright ASME International
Provided by IHS under license with ASME
No reproduction or networking permitted without license from IHS
Not for Resale

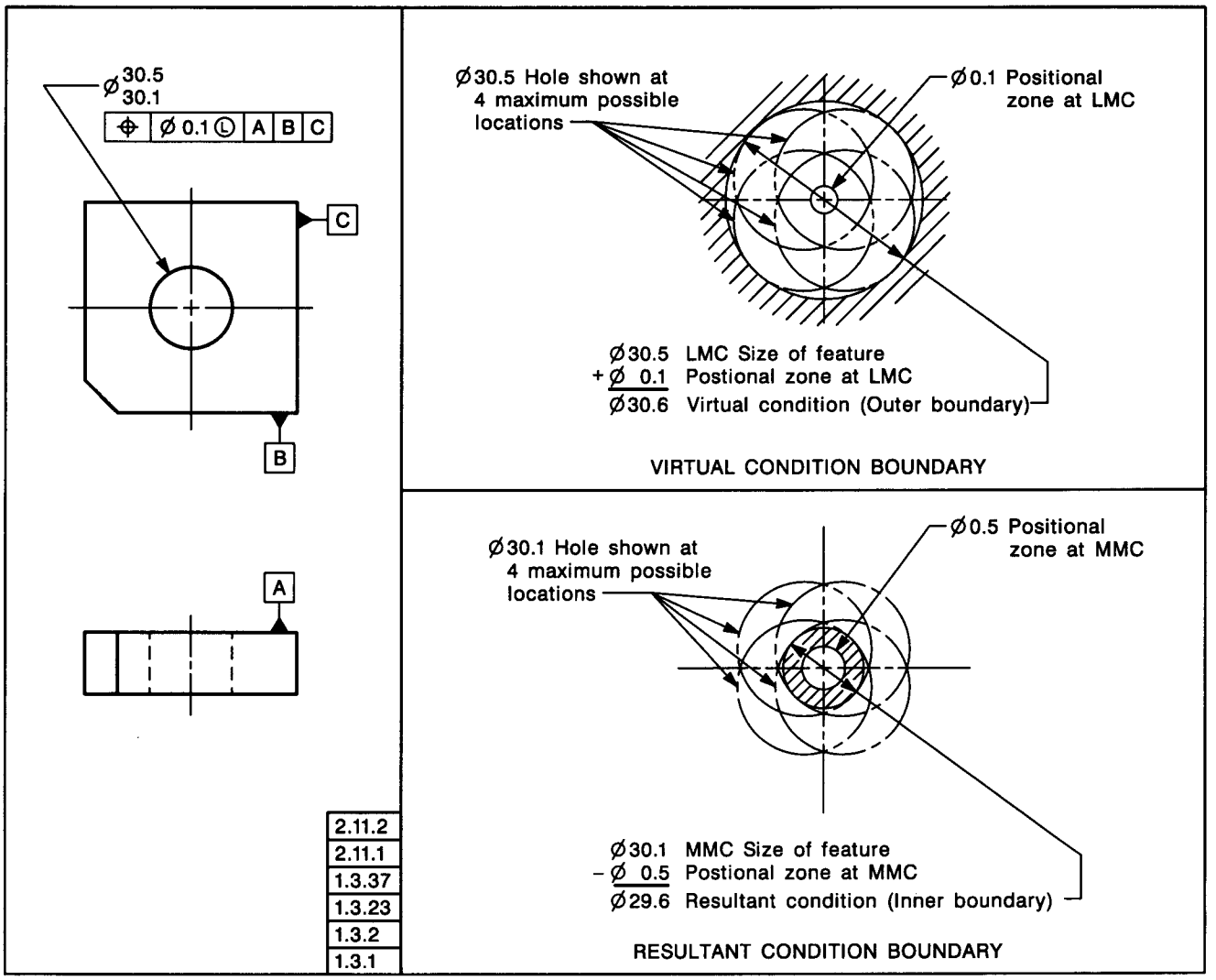

FIG. 2-10 VIRTUAL AND RESULTANT CONDITION BOUNDARIES USING LMC CONCEPT — INTERNAL FEATURE

Copyright ASME International
Provided by IHS under license with ASME
No reproduction or networking permitted without license from IHS
Not for Resale

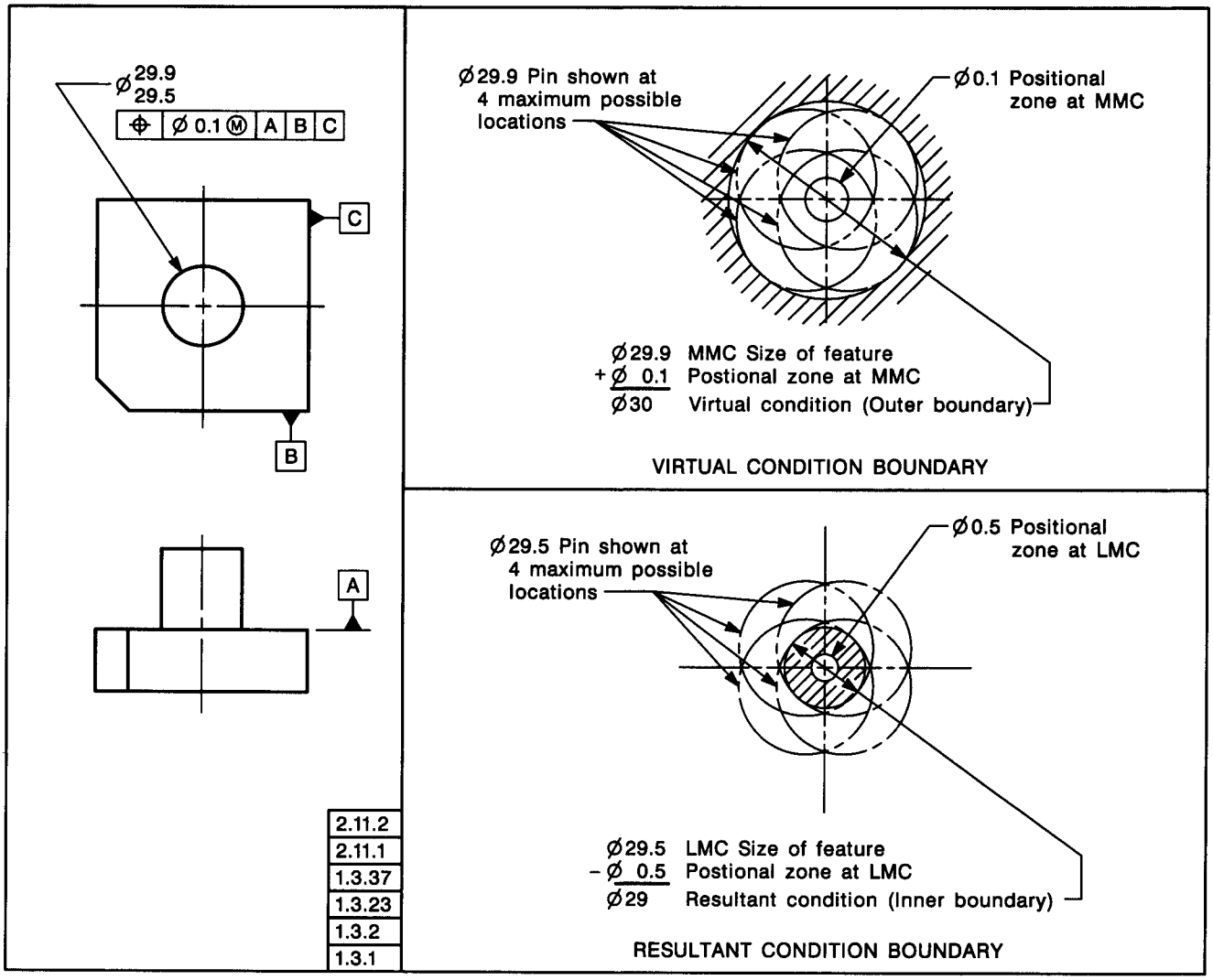

FIG. 2-11 VIRTUAL AND RESULTANT CONDITION BOUNDARIES USING MMC CONCEPT — EXTERNAL FEATURE

Copyright ASME International
Provided by IHS under license with ASME
No reproduction or networking permitted without license from IHS
Not for Resale

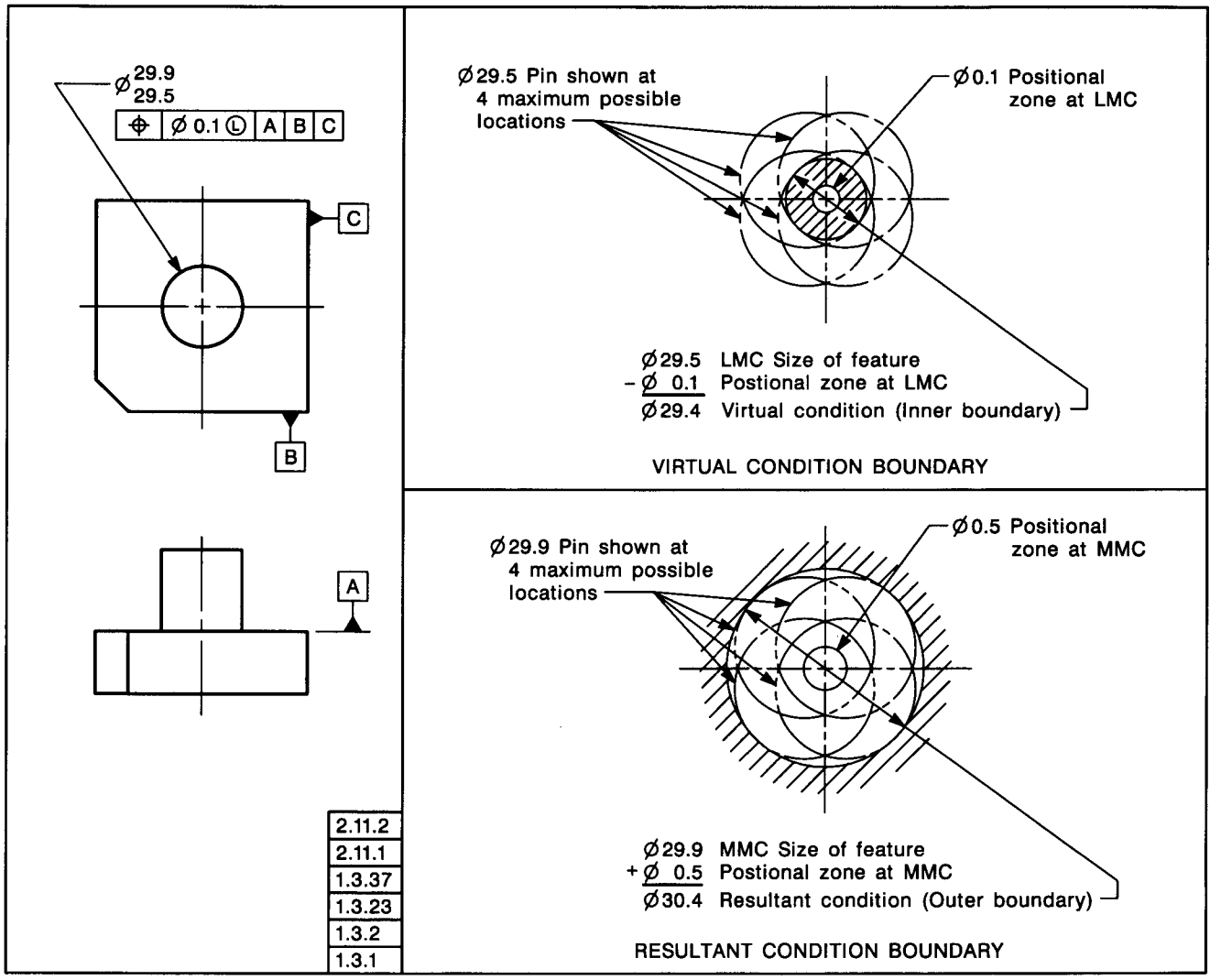

FIG. 2-12 VIRTUAL AND RESULTANT CONDITION BOUNDARIES USING LMC CONCEPT — EXTERNAL FEATURE

Copyright ASME International
Provided by IHS under license with ASME
No reproduction or networking permitted without license from IHS
Not for Resale

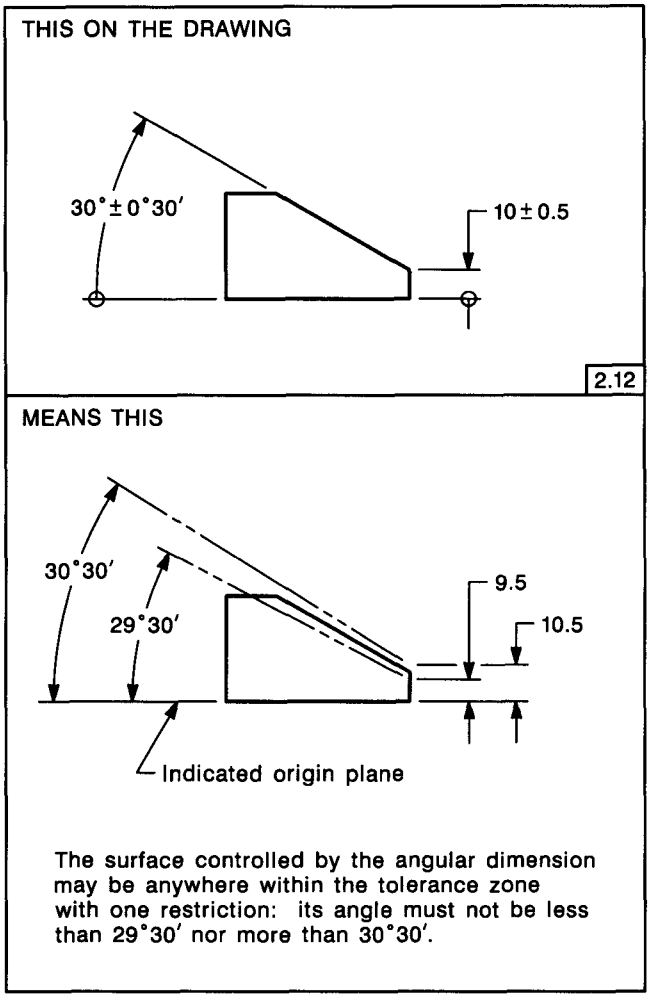

FIG. 2-13 TOLERANCING AN ANGULAR SURFACE USING A COMBINATION OF LINEAR AND ANGULAR DIMENSIONS

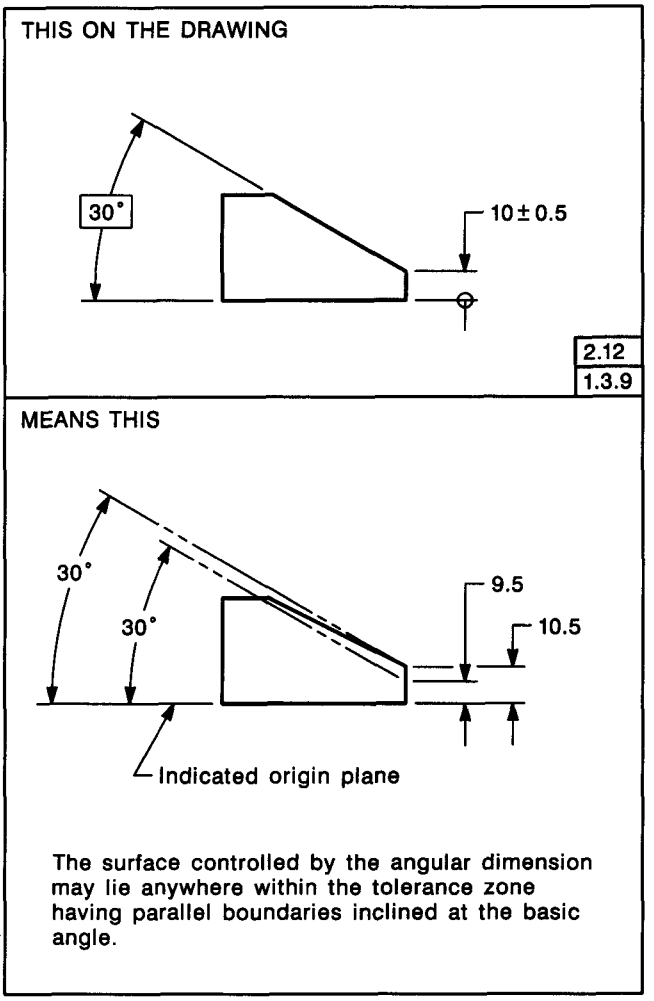

FIG. 2-14 TOLERANCING AN ANGULAR SURFACE WITH A BASIC ANGLE

Copyright ASME International
Provided by IHS under license with ASME
No reproduction or networking permitted without license from IHS
Not for Resale

THIS ON THE DRAWING

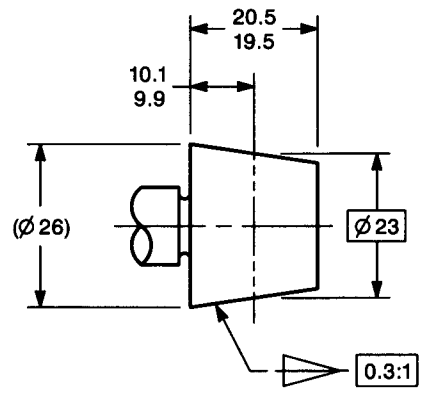

The basic diameter controls the size of the tapered section as well as its longitudinal position in relation to some other surface.

3.3.17
2.13
1.3.9

MEANS THIS

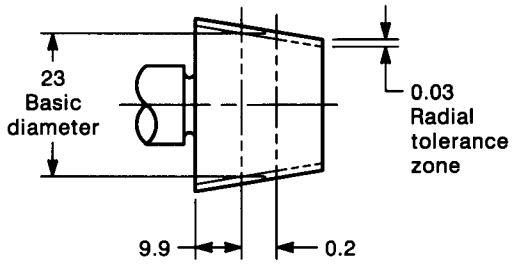

The taper must fall within the zone created by the basic taper and the locating dimension of the basic diameter.

FIG. 2-15 SPECIFYING A BASIC TAPER AND A BASIC DIAMETER

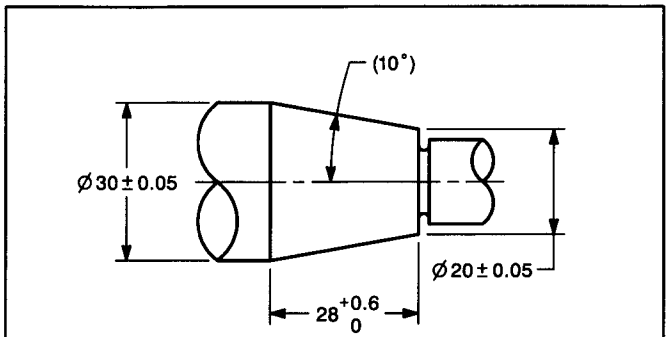

The slope of the taper may be given as a reference to aid manufacturing.

(a) Non-critical taper

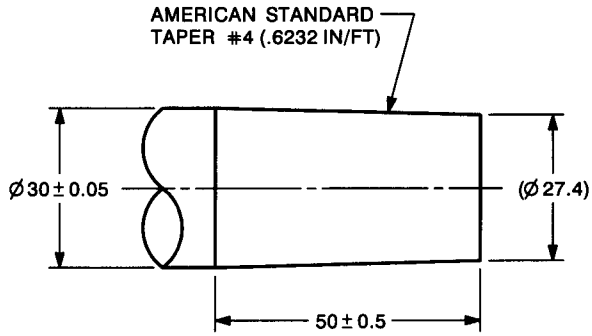

(b) Standard taper

2.13

FIG. 2-16 SPECIFYING TAPERS

Conical taper is defined as the ratio of the difference in the diameters of two sections (perpendicular to the axis) of a cone to the distance between these sections.

Thus, taper = $(D - d)/L$.

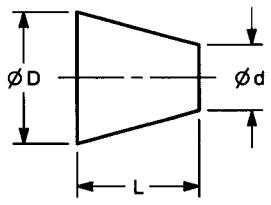

The symbol for a conical taper is shown in Fig. 2-15.

2.14 FLAT TAPERS

A flat taper may be specified by a toleranced slope and a toleranced height at one end. See Fig. 2-17. *Slope* may be specified as the inclination of a surface expressed as a ratio of the difference in the heights at each end (above and at right angles to a base line) to the distance between those heights.

Thus, slope = $(H - h)/L$.

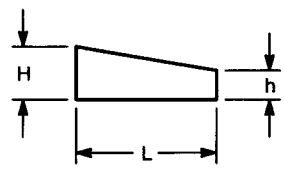

The symbol for slope is shown in Fig. 2-17.

Copyright ASME International
Provided by IHS under license with ASME
No reproduction or networking permitted without license from IHS
Not for Resale

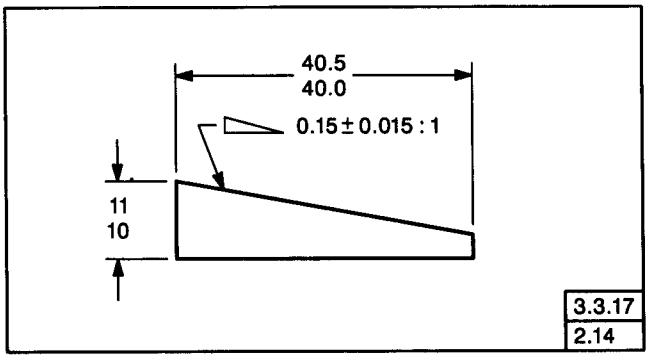

FIG. 2-17 SPECIFYING A FLAT TAPER

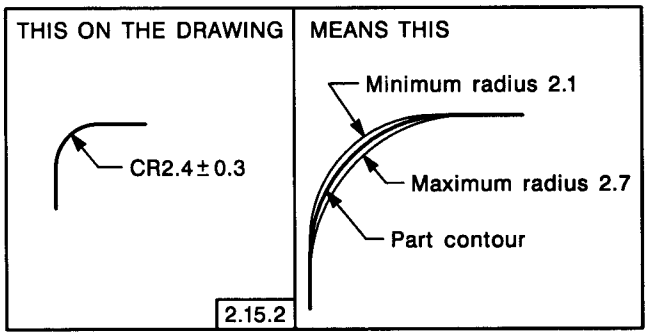

FIG. 2-19 SPECIFYING A CONTROLLED RADIUS

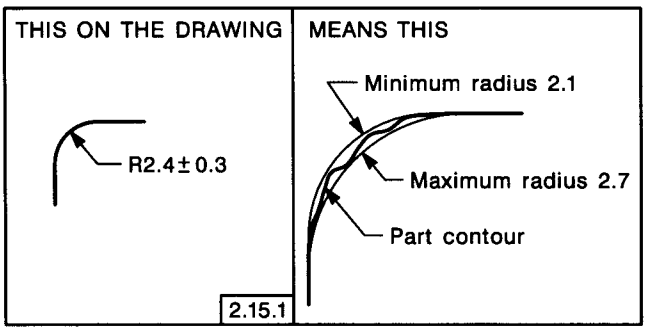

FIG. 2-18 SPECIFYING A RADIUS

2.15 RADIUS

A *radius* is any straight line extending from the center to the periphery of a circle or sphere.

2.15.1 Radius Tolerance. A radius symbol R creates a zone defined by two arcs (the minimum and maximum radii). The part surface must lie within this zone. See Fig. 2-18.

NOTE: This is a change from the previous editions of this Standard. See Appendix D.

2.15.2 Controlled Radius Tolerance. A controlled radius symbol CR creates a tolerance zone defined by two arcs (the minimum and maximum radii) that are tangent to the adjacent surfaces. When specifying a controlled radius, the part contour within the crescent-shaped tolerance zone must be a fair curve without reversals. Additionally, radii taken at all points on the part contour shall neither be smaller than the specified minimum limit nor larger than the maximum limit. See Fig. 2-19. Where it is necessary to apply further restrictions to the part radius, they shall be specified on the drawing or in a document referenced on the drawing.

2.16 STATISTICAL TOLERANCING

Statistical tolerancing is the assigning of tolerances to related components of an assembly on the basis of sound statistics (such as the assembly tolerance is equal to the square root of the sum of the squares of the individual tolerances).

2.16.1 Application to Assemblies. The tolerances assigned to component items of an assembly are determined by arithmetically dividing the assembly tolerances among the individual components of the assembly. When tolerances assigned by arithmetic stacking are restrictive, statistical tolerancing may be used for increased individual feature tolerance. The increased tolerance may reduce manufacturing cost, but shall only be employed where the appropriate statistical process control will be used. For application see appropriate statistics or engineering design manuals.

2.16.2 Identification. Statistical tolerances on dimensions are designated as illustrated in Figs. 2-20 through 2-22.

(a) A note such as the following shall be placed on the drawing: FEATURES IDENTIFIED AS STATISTICALLY TOLERANCED ⟨ST⟩ SHALL BE PRODUCED WITH STATISTICAL PROCESS CONTROLS. See Fig. 2-20.

(b) It may be necessary to designate both the statistical limits and the arithmetic stacking limits when the dimension has the possibility of being produced without statistical process control (SPC). A note such as the following shall be placed on the drawing: FEATURES IDENTIFIED AS STATISTICALLY TOLERANCED ⟨ST⟩ SHALL BE PRODUCED WITH STATISTICAL PROCESS CONTROLS, OR TO THE MORE RESTRICTIVE ARITHMETIC LIMITS. See Fig. 2-21.

Copyright ASME International
Provided by IHS under license with ASME
No reproduction or networking permitted without license from IHS
Not for Resale

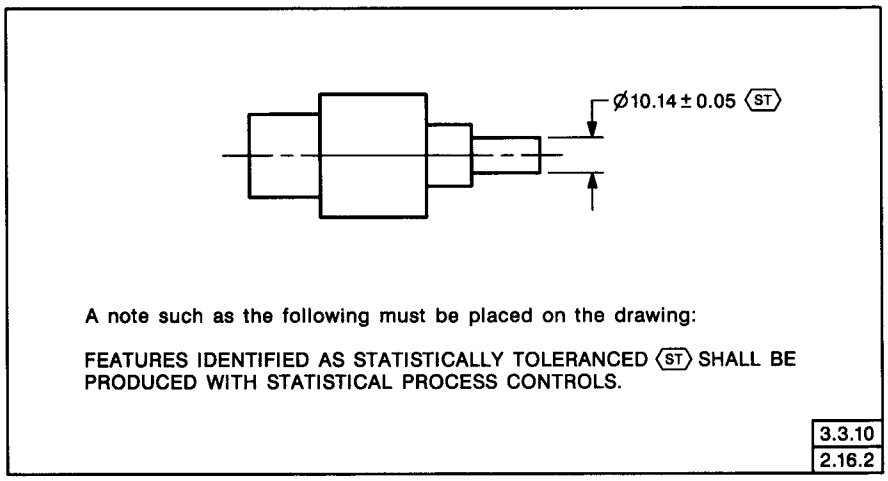

FIG. 2-20 STATISTICAL TOLERANCING

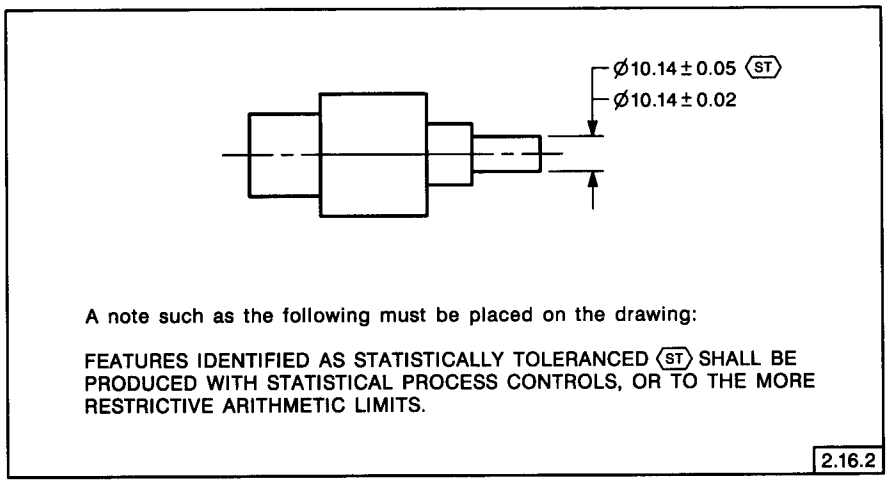

FIG. 2-21 STATISTICAL TOLERANCING WITH ARITHMETIC LIMITS

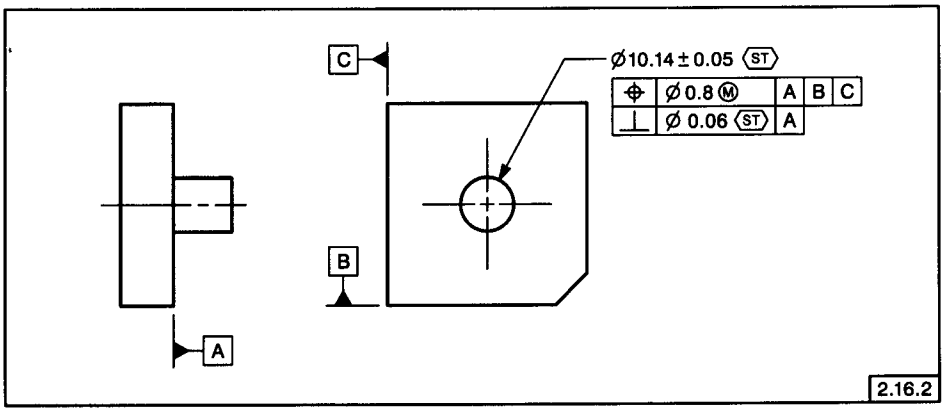

FIG. 2-22 STATISTICAL TOLERANCING WITH GEOMETRIC CONTROLS

Copyright ASME International
Provided by IHS under license with ASME
No reproduction or networking permitted without license from IHS Not for Resale

Copyright ASME International
Provided by IHS under license with ASME
No reproduction or networking permitted without license from IHS
Not for Resale

3 Symbology

3.1 GENERAL

This Section establishes the symbols for specifying geometric characteristics and other dimensional requirements on engineering drawings. Symbols should be of sufficient clarity to meet the legibility and reproducibility requirements of ASME Y14.2M. Symbols are to be used only as described herein.

3.2 USE OF NOTES TO SUPPLEMENT SYMBOLS

Situations may arise where the desired geometric requirements cannot be completely conveyed by symbology. In such cases, a note may be used to describe the requirement, either separately or to supplement a geometric symbol. See Figs. 5-18 and 6-44.

3.3 SYMBOL CONSTRUCTION

Information related to the construction, form, and proportion of individual symbols described herein is contained in Appendix C.

3.3.1 Geometric Characteristic Symbols. The symbolic means of indicating geometric characteristics are shown in Fig. 3-1.

3.3.2 Datum Feature Symbol. The symbolic means of indicating a datum feature consists of a capital letter enclosed in a square frame and a leader line extending from the frame to the concerned feature, terminating with a triangle. The triangle may be filled or not filled. See Fig. 3-2. Letters of the alphabet (except I, O, and Q) are used as datum identifying letters. Each datum feature of a part requiring identification shall be assigned a different letter. When datum features requiring identification on a drawing are so numerous as to exhaust the single alpha series, the double alpha series (AA through AZ, BA through BZ, etc.) shall be used and enclosed in a rectangular frame. Where the same datum feature symbol is repeated to identify the same feature in other locations of a drawing, it need not be identified as reference. The datum feature symbol is applied to the concerned feature surface outline, extension line, dimension line, or feature control frame as follows:

(a) placed on the outline of a feature surface, or on an extension line of the feature outline, clearly separated from the dimension line, when the datum feature is the surface itself. See Fig. 3-3.

(b) placed on an extension of the dimension line of a feature of size when the datum is the axis or center plane. If there is insufficient space for the two arrows, one of them may be replaced by the datum feature triangle. See Figs. 3-4(a) through (c).

(c) placed on the outline of a cylindrical feature surface or an extension line of the feature outline, separated from the size dimension, when the datum is the axis. For CAD systems, the triangle may be tangent to the feature. See Figs. 3-4(d) and (f).

(d) placed on a dimension leader line to the feature size dimension where no geometrical tolerance and feature control frame are used. See Figs. 3-4(e) and 5-2.

(e) placed on the planes established by datum targets on complex or irregular datum features (see para. 4.6.7), or to reidentify previously established datum axes or planes on repeated or multisheet drawing requirements.

(f) placed above or below and attached to the feature control frame when the feature (or group of features) controlled is the datum axis or datum center plane. See Figs. 3-5 and 3-23.

3.3.3 Datum Target Symbol. The symbolic means of indicating a datum target is a circle divided horizontally into halves. See Fig. 3-6. The lower half contains a letter identifying the associated datum, followed by the target number assigned sequentially starting with 1 for each datum. See Fig. 4-30. A radial line attached to the symbol is directed to a target point, target line, or target area, as applicable. See para. 4.6.1. Where the datum target is an area, the area size is entered in the upper half of the symbol; otherwise, the upper half is left blank. If there is not sufficient space within the compartment, the

Copyright ASME International
Provided by IHS under license with ASME
No reproduction or networking permitted without license from IHS
Not for Resale

	TYPE OF TOLERANCE	CHARACTERISTIC	SYMBOL	SEE:
FOR INDIVIDUAL FEATURES	FORM	STRAIGHTNESS	—	6.4.1
		FLATNESS	▱	6.4.2
		CIRCULARITY (ROUNDNESS)	○	6.4.3
		CYLINDRICITY	⌭	6.4.4
FOR INDIVIDUAL OR RELATED FEATURES	PROFILE	PROFILE OF A LINE	⌒	6.5.2 (b)
		PROFILE OF A SURFACE	⌓	6.5.2 (a)
FOR RELATED FEATURES	ORIENTATION	ANGULARITY	∠	6.6.2
		PERPENDICULARITY	⊥	6.6.4
		PARALLELISM	//	6.6.3
	LOCATION	POSITION	⌖	5.2
		CONCENTRICITY	◎	5.11.3
		SYMMETRY	⌯	5.13
	RUNOUT	CIRCULAR RUNOUT	↗*	6.7.1.2.1
		TOTAL RUNOUT	⌰*	6.7.1.2.2
* ARROWHEADS MAY BE FILLED OR NOT FILLED				3.3.1

FIG. 3-1 GEOMETRIC CHARACTERISTIC SYMBOLS

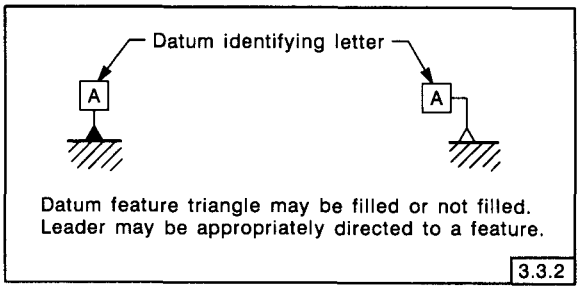

FIG. 3-2 DATUM FEATURE SYMBOL

is not sufficient space within the compartment, the area size may be placed outside and connected to the compartment by a leader line. See Fig. 4-29.

3.3.4 Basic Dimension Symbol. The symbolic means of indicating a basic dimension is shown in Fig. 3-7.

3.3.5 Material Condition Symbols. The symbolic means of indicating "at maximum material condition" and "at least material condition" are shown in Fig. 3-8. The use of these symbols in local and general notes is prohibited.

3.3.6 Projected Tolerance Zone Symbol. The symbolic means of indicating a projected tolerance zone is shown in Fig. 3-8. The use of the symbol in local and general notes is prohibited.

3.3.7 Diameter and Radius Symbols. The symbols used to indicate diameter, spherical diameter, radius, spherical radius, and controlled radius are shown in Fig. 3-8. These symbols precede the value of a dimension or tolerance given as a diameter or radius, as applicable. The symbol and the value are not separated by a space.

3.3.8 Reference Symbol. The symbolic means of indicating a dimension or other dimensional data as reference is by enclosing the dimension (or dimensional data) within parentheses. See Fig. 3-8. In written notes, parentheses retain their grammatical interpretation unless otherwise specified.

3.3.9 Arc Length Symbol. The symbolic means of indicating that a linear dimension is an arc length measured on a curved outline is shown in Fig. 3-8. The symbol is placed above the dimension.

Copyright ASME International
Provided by IHS under license with ASME
No reproduction or networking permitted without license from IHS
Not for Resale

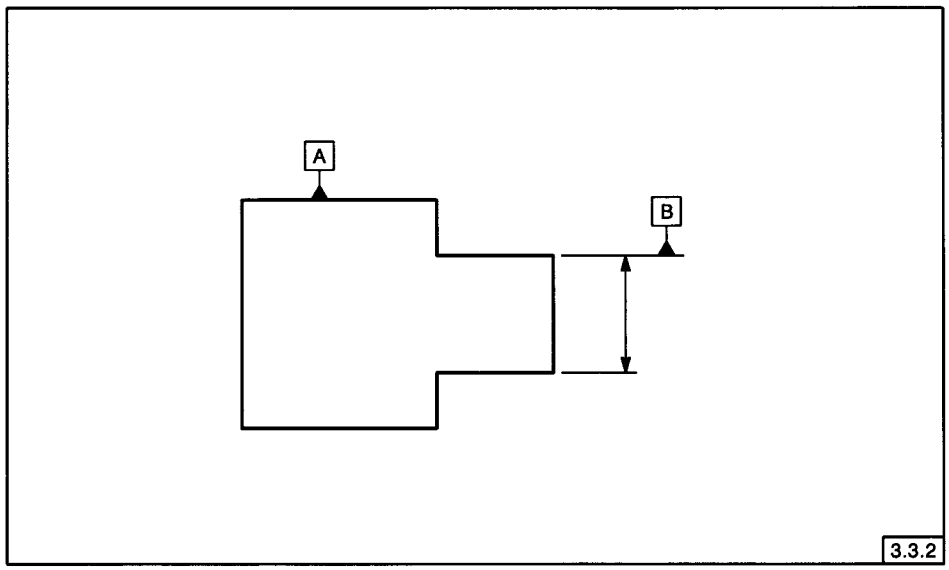

FIG. 3-3 DATUM FEATURE SYMBOLS ON A FEATURE SURFACE AND AN EXTENSION LINE

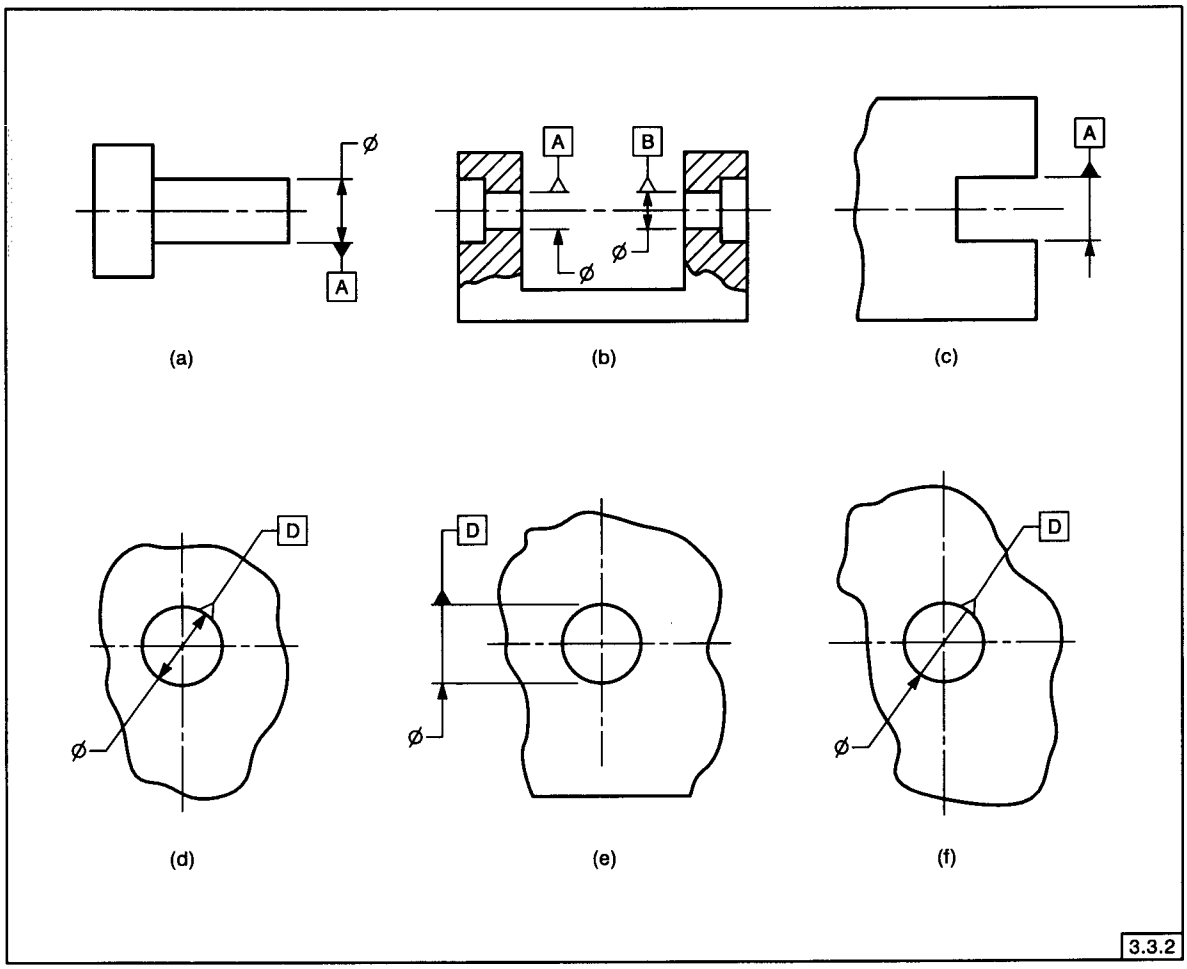

FIG. 3-4 PLACEMENT OF DATUM FEATURE SYMBOLS ON FEATURES OF SIZE

Copyright ASME International
Provided by IHS under license with ASME
No reproduction or networking permitted without license from IHS
Not for Resale

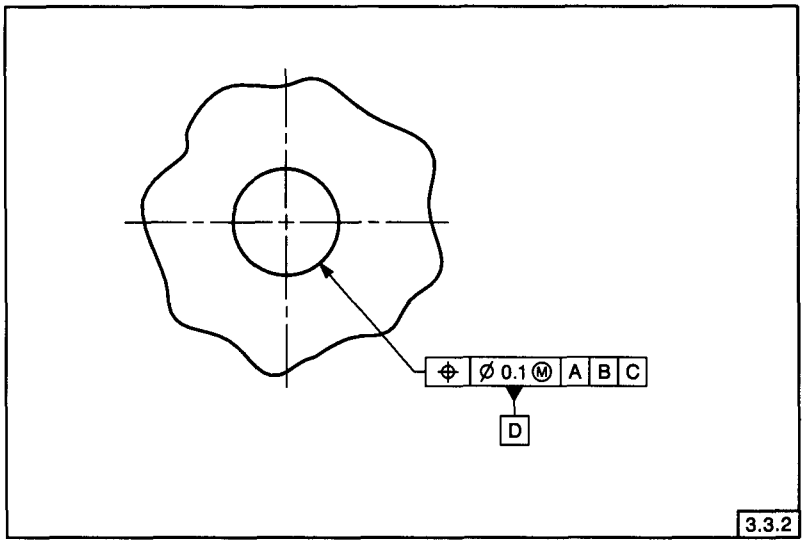

FIG. 3-5 PLACEMENT OF DATUM FEATURE SYMBOL IN CONJUNCTION WITH A FEATURE CONTROL FRAME

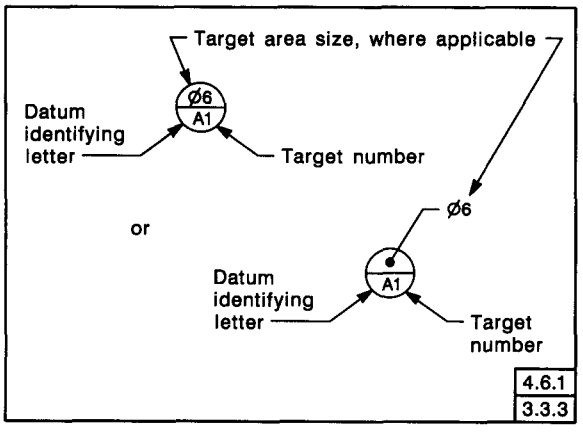

FIG. 3-6 DATUM TARGET SYMBOL

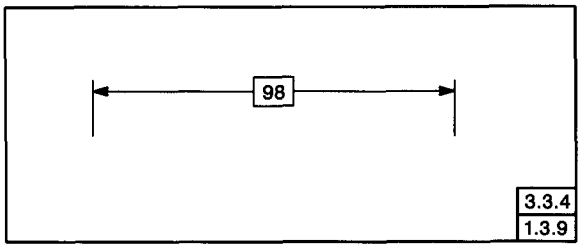

FIG. 3-7 BASIC DIMENSION SYMBOL

3.3.10 Statistical Tolerancing Symbol. The symbolic means of indicating that a tolerance is based on statistical tolerancing is shown in Fig. 3-8. If the tolerance is a statistical geometric tolerance, the symbol is placed in the feature control frame following the stated tolerance and any modifier. See Fig. 3-9. If the tolerance is a statistical size tolerance, the symbol is placed adjacent to the size dimension. See Figs. 2-20 and 3-10.

3.3.11 Between Symbol. The symbolic means of indicating that a tolerance applies to a limited segment of a surface between designated extremities is shown in Figs. 3-8, 3-11, 6-13, and 6-14. In Fig. 3-11, for example, the tolerance applies only between point G and point H.

3.3.12 Counterbore or Spotface Symbol. The symbolic means of indicating a counterbore or a spotface is shown in Fig. 3-12. The symbol precedes, with no space, the dimension of the counterbore or spotface.

3.3.13 Countersink Symbol. The symbolic means of indicating a countersink is shown in Fig. 3-13. The symbol precedes, with no space, the dimensions of the countersink.

3.3.14 Depth Symbol. The symbolic means of indicating that a dimension applies to the depth of a feature is to precede that dimension with the depth symbol, as shown in Fig. 3-14. The symbol and the value are not separated by a space.

Copyright ASME International
Provided by IHS under license with ASME
No reproduction or networking permitted without license from IHS
Not for Resale

TERM	SYMBOL	SEE:
AT MAXIMUM MATERIAL CONDITION	Ⓜ	3.3.5
AT LEAST MATERIAL CONDITION	Ⓛ	3.3.5
PROJECTED TOLERANCE ZONE	Ⓟ	3.3.6
FREE STATE	Ⓕ	3.3.19
TANGENT PLANE	Ⓣ	3.3.20
DIAMETER	Ø	3.3.7
SPHERICAL DIAMETER	SØ	3.3.7
RADIUS	R	3.3.7
SPHERICAL RADIUS	SR	3.3.7
CONTROLLED RADIUS	CR	3.3.7
REFERENCE	( )	3.3.8
ARC LENGTH	⌒	3.3.9
STATISTICAL TOLERANCE	⟨ST⟩	3.3.10
BETWEEN	◄►	3.3.11

FIG. 3-8 MODIFYING SYMBOLS

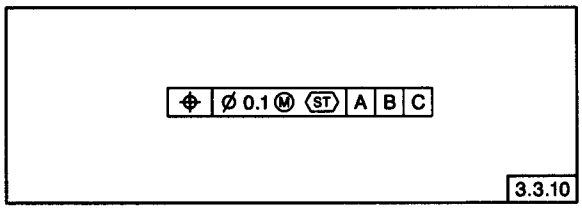

FIG. 3-9 SYMBOL INDICATING THE SPECIFIED TOLERANCE IS A STATISTICAL GEOMETRIC TOLERANCE

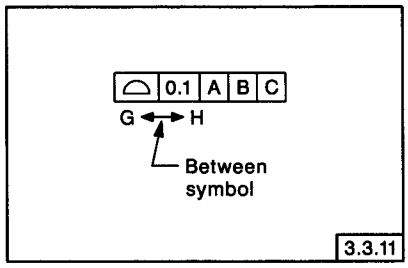

FIG. 3-11 BETWEEN SYMBOL

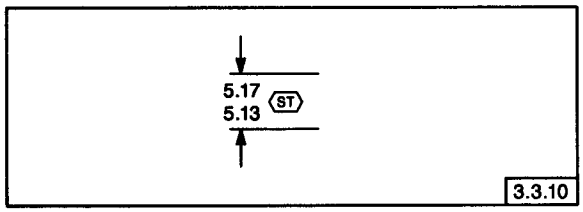

FIG. 3-10 STATISTICAL TOLERANCE SYMBOL

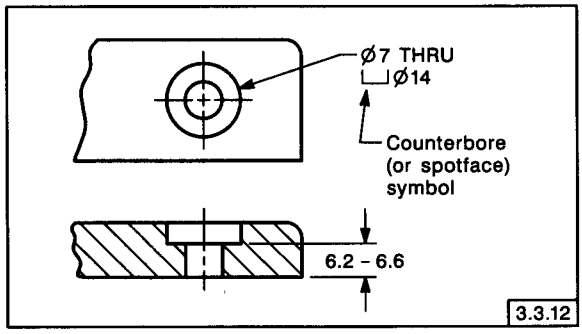

FIG. 3-12 COUNTERBORE OR SPOTFACE SYMBOL

Copyright ASME International
Provided by IHS under license with ASME
No reproduction or networking permitted without license from IHS
Not for Resale

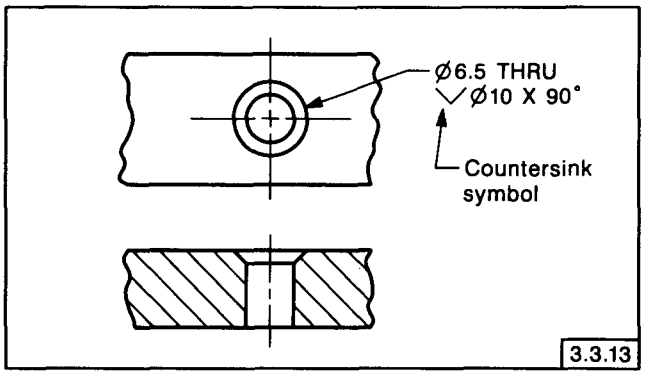

FIG. 3-13 COUNTERSINK SYMBOL

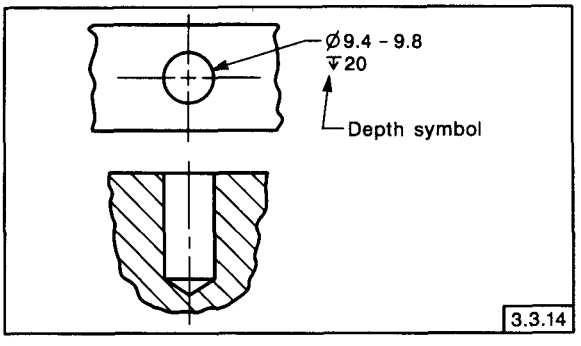

FIG. 3-14 DEPTH SYMBOL

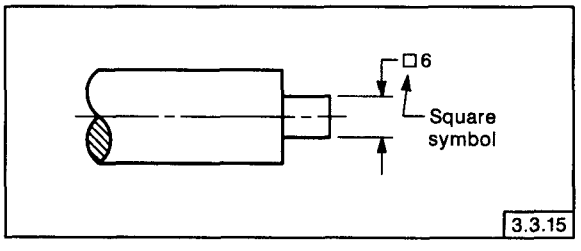

FIG. 3-15 SQUARE SYMBOL

3.3.15 Square Symbol. The symbolic means of indicating that a single dimension applies to a square shape is to precede that dimension with the square symbol, as shown in Fig. 3-15. The symbol and the value are not separated by a space.

3.3.16 Dimension Origin Symbol. The symbolic means of indicating that a toleranced dimension between two features originates from one of these features and not the other is shown in Figs. 2-5 and 3-16.

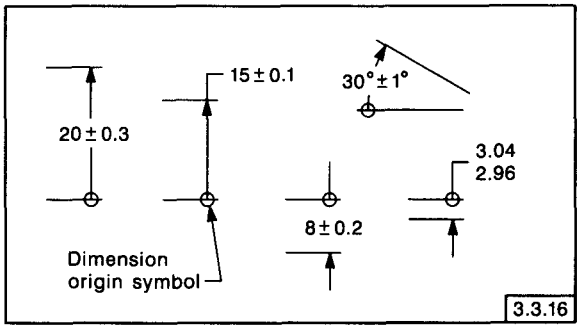

FIG. 3-16 DIMENSION ORIGIN SYMBOL

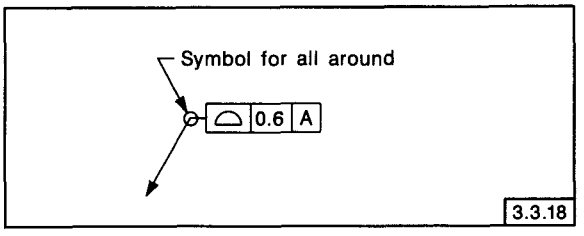

FIG. 3-17 SYMBOL FOR ALL AROUND

3.3.17 Taper and Slope Symbols. The symbolic means of indicating taper and slope for conical and flat tapers are shown in Figs. 2-15 and 2-17. These symbols are always shown with the vertical leg to the left.

3.3.18 All Around Symbol. The symbolic means of indicating that a tolerance applies to surfaces all around the part is a circle located at the junction of the leader from the feature control frame. See Fig. 3-17.

3.3.19 Free State Symbol. For features subject to free state variation as defined in para. 6.8, the symbolic means of indicating that the geometric tolerance applies in its "free state" is shown in Fig. 3-8. The symbol is placed in the feature control frame following the stated tolerance and any modifier. See Fig. 3-18.

3.3.20 Tangent Plane Symbol. The symbolic means of indicating a tangent plane is shown in Fig. 3-8. The symbol is placed in the feature control frame following the stated tolerance as shown in Fig. 6-43. Also see paras. 1.3.21 and 6.6.1.3.

3.3.21 Surface Texture Symbols. For information on the symbolic means of specifying surface texture, see ANSI Y14.36.

Copyright ASME International
Provided by IHS under license with ASME
No reproduction or networking permitted without license from IHS
Not for Resale

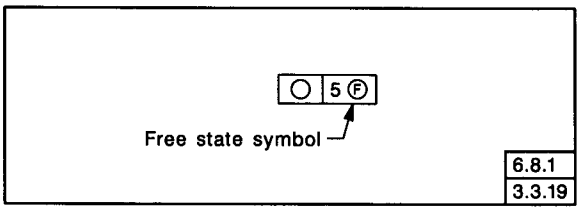

FIG. 3-18 FEATURE CONTROL FRAME WITH FREE STATE SYMBOL

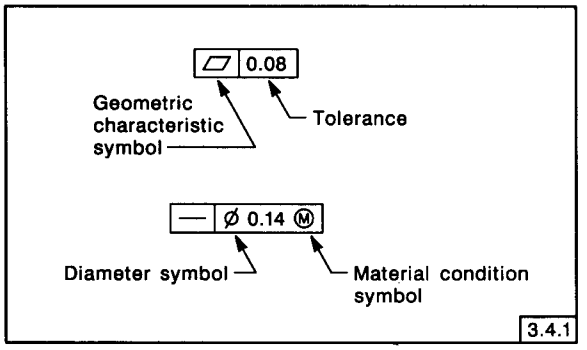

FIG. 3-19 FEATURE CONTROL FRAME

3.3.22 Symbols for Limits and Fits. For information on the symbolic means of specifying metric limits and fits, see para. 2.2.1.

3.4 GEOMETRIC TOLERANCE SYMBOLS

Geometric characteristic symbols, the tolerance value, and datum reference letters, where applicable, are combined in a feature control frame to express a geometric tolerance.

3.4.1 Feature Control Frame. A geometric tolerance for an individual feature is specified by means of a feature control frame divided into compartments containing the geometric characteristic symbol followed by the tolerance. See Fig. 3-19. Where applicable, the tolerance is preceded by the diameter symbol and followed by a material condition symbol.

3.4.2 Feature Control Frame Incorporating One Datum Reference. Where a geometric tolerance is related to a datum, this relationship is indicated by entering the datum reference letter in a compartment following the tolerance. Where applicable, the datum reference letter is followed by a material condition symbol. See Fig. 3-20. Where a datum is established by two datum features — for example,

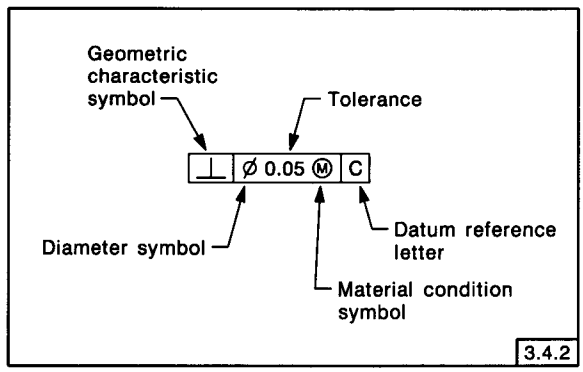

FIG. 3-20 FEATURE CONTROL FRAME INCORPORATING A DATUM REFERENCE

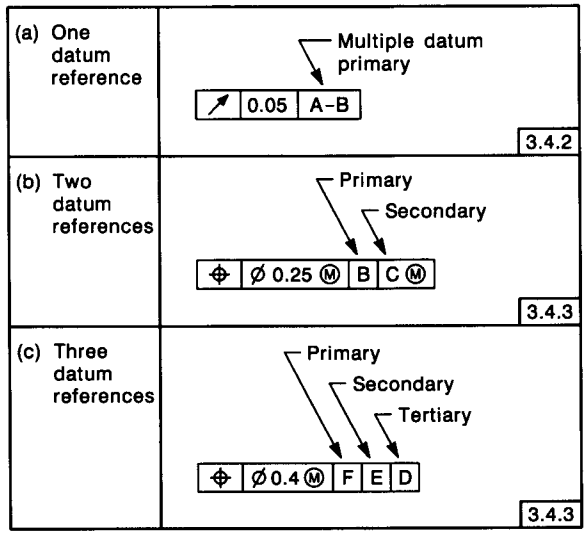

FIG. 3-21 ORDER OF PRECEDENCE OF DATUM REFERENCE

an axis established by two datum diameters — both datum reference letters, separated by a dash, are entered in a single compartment. Where applicable, each datum reference letter is followed by a material condition symbol. See Figs. 3-21(a) and 4-19 and para. 4.5.7.

3.4.3 Feature Control Frame Incorporating Two or Three Datum References. Where more than one datum is required, the datum reference letters (each followed by a material condition symbol, where applicable) are entered in separate compartments in the desired order of precedence, from left to right. See Figs. 3-21(b) and (c). Datum reference

Copyright ASME International
Provided by IHS under license with ASME
No reproduction or networking permitted without license from IHS
Not for Resale

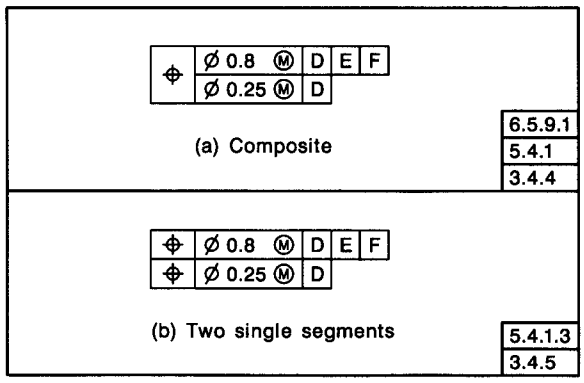

FIG. 3-22 MULTIPLE FEATURE CONTROL FRAMES

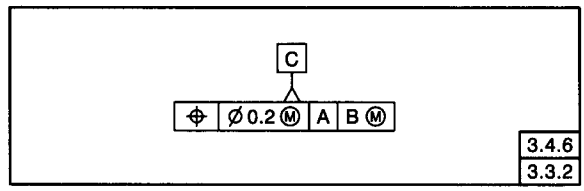

FIG. 3-23 COMBINED FEATURE CONTROL FRAME AND DATUM FEATURE SYMBOL

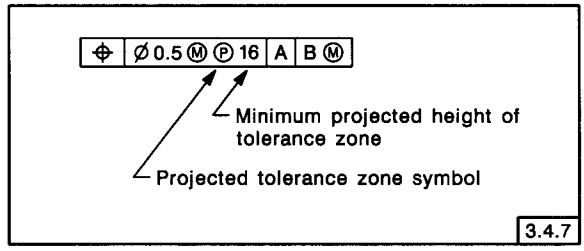

FIG. 3-24 FEATURE CONTROL FRAME WITH A PROJECTED TOLERANCE ZONE SYMBOL

letters need not be in alphabetical order in the feature control frame.

3.4.4 Composite Feature Control Frame. The composite feature control frame contains a single entry of the geometric characteristic symbol followed by each tolerance and datum requirement, one above the other. See Figs. 3-22(a) and paras. 5.4.1 and 6.5.9.

3.4.5 Two Single-Segment Feature Control Frames. The symbolic means of representing two single-segment feature control frames is shown in Fig. 3-22(b). Application of this control is described in para. 5.4.1.3.

3.4.6 Combined Feature Control Frame and Datum Feature Symbol. Where a feature or pattern of features controlled by a geometric tolerance also serves as a datum feature, the feature control frame and datum feature symbol are combined. See Fig. 3-23. Wherever a feature control frame and datum feature symbol are combined, datums referenced in the feature control frame are not considered part of the datum feature symbol. In the positional tolerance example, Fig. 3-23, a feature is controlled for position in relation to datums A and B, and identified as datum feature C. Whenever datum C is referenced elsewhere on the drawing, the reference applies to datum C, not to datums A and B.

3.4.7 Feature Control Frame With a Projected Tolerance Zone. Where a positional or an orientation tolerance is specified as a projected tolerance zone, the projected tolerance zone symbol is placed in the feature control frame, along with the dimension indicating the minimum height of the tolerance zone. This is to follow the stated tolerance and any modifier. See Fig. 3-24. Where necessary for clarification, the projected tolerance zone is indicated with a chain line and the minimum height of the tolerance zone is specified in a drawing view. The height dimension may then be omitted from the feature control frame. See Fig. 5-34.

3.5 FEATURE CONTROL FRAME PLACEMENT

The feature control frame is related to the considered feature by one of the following methods and as depicted in Fig. 3-25:

(a) locating the frame below or attached to a leader-directed callout or dimension pertaining to the feature;

(b) running a leader from the frame to the feature;

(c) attaching a side or an end of the frame to an extension line from the feature, provided it is a plane surface;

(d) attaching a side or an end of the frame to an extension of the dimension line pertaining to a feature of size.

3.6 DEFINITION OF THE TOLERANCE ZONE

Where the specified tolerance value represents the diameter of a cylindrical or spherical zone, the diam-

Copyright ASME International
Provided by IHS under license with ASME
No reproduction or networking permitted without license from IHS
Not for Resale

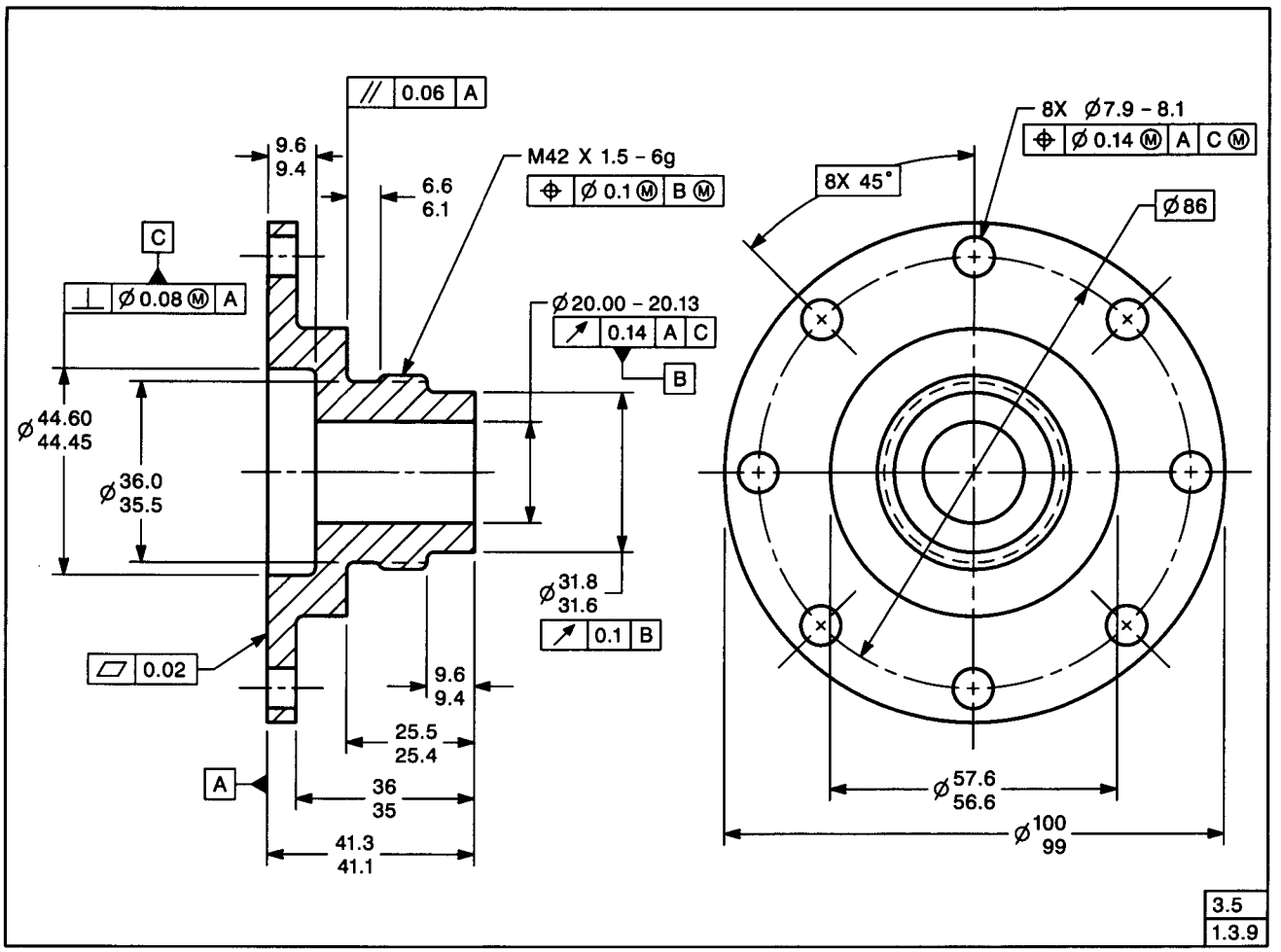

FIG. 3-25 FEATURE CONTROL FRAME PLACEMENT

Copyright ASME International
Provided by IHS under license with ASME
No reproduction or networking permitted without license from IHS
Not for Resale

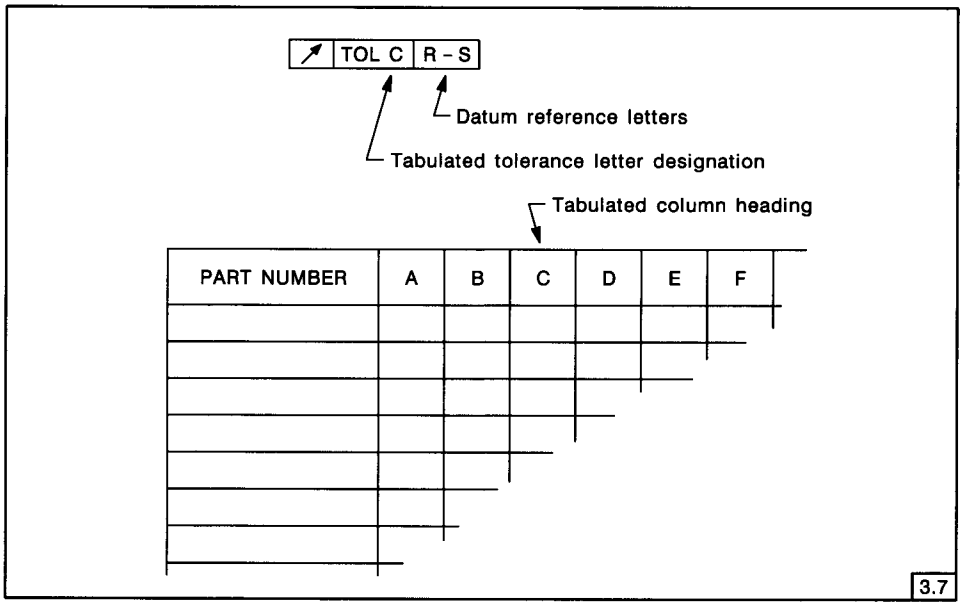

FIG. 3-26 TABULATED TOLERANCES

eter or spherical diameter symbol shall precede the tolerance value. Where the tolerance zone is other than a diameter, identification is unnecessary, and the specified tolerance value represents the distance between two parallel straight lines or planes, or the distance between two uniform boundaries, as the specific case may be.

3.7 TABULATED TOLERANCES

Where the tolerance in a feature control frame is tabulated, a letter representing the tolerance, preceded by the abbreviation TOL, is entered as shown in Fig. 3-26.

Copyright ASME International
Provided by IHS under license with ASME
No reproduction or networking permitted without license from IHS
Not for Resale

4 Datum Referencing

4.1 GENERAL

This Section establishes the principles of identifying features of a part as datum features for the purpose of establishing geometric relationships imposed by a feature control frame. Datums are theoretically exact points, axes, and planes. These elements exist within a framework of three mutually perpendicular intersecting planes known as the *datum reference frame.* See Fig. 4-1. This Section also establishes the criteria for establishing datums and the datum reference frame from datum features.

4.2 IMMOBILIZATION OF PART

Where features of a part have been identified as datum features, the part is oriented and immobilized relative to the three mutually perpendicular planes of the datum reference frame in a selected order of precedence. This in turn makes the geometric relationships that exist between the features measurable. A true geometric counterpart of a feature used to establish a datum may be:

(a) a plane;

(b) a maximum material condition boundary (MMC concept);

(c) a least material condition boundary (LMC concept);

(d) a virtual condition boundary;

(e) an actual mating envelope;

(f) a mathematically defined contour.

4.2.1 Application. As measurements cannot be made from a true geometric counterpart that is theoretical, a datum is assumed to exist in and be simulated by the associated processing equipment. For example, machine tables and surface plates, though not true planes, are of such quality that the planes derived from them are used to simulate the datums from which measurements are taken and dimensions verified. See Fig. 4-10. Also, for example, ring and plug gages, and mandrels, though not true cylinders, are of such quality that their axes are used as simulated datums from which measurements are taken and dimensions verified. See Figs. 4-11 and 4-12. When magnified surfaces of manufactured parts are seen to have irregularities, contact is made with a simulated datum at a number of surface extremities or high points.

4.2.2 Datum Reference Frame. Sufficient datum features, those most important to the design of a part, or designated portions of these features are chosen to position the part in relation to a set of three mutually perpendicular planes, jointly called a datum reference frame. This reference frame exists in theory only and not on the part. Therefore, it is necessary to establish a method of simulating the theoretical reference frame from the actual features of the part. This simulation is accomplished by positioning specifically identified features in contact with appropriate datum simulators, in a stated order of precedence, to restrict motion of the part and to relate the part adequately to the datum reference frame. See Fig. 4-1.

4.2.2.1 Mutually Perpendicular Planes. The planes of the datum reference frame are simulated in a mutually perpendicular relationship to provide direction as well as the origin for related dimensions and measurements. Thus, when the part is positioned on the datum reference frame (by physical contact between each datum feature and its counterpart in the associated processing equipment), dimensions related to the datum reference frame by a feature control frame or note are thereby mutually perpendicular. This theoretical reference frame constitutes the three-plane dimensioning system used for datum referencing.

4.2.2.2 Number of Datum Reference Frames. In some cases, a single datum reference frame will suffice. In others, additional datum reference frames may be necessary where physical separation or the functional relationship of features requires that datum reference frames be applied at specific locations on the part. In such cases, each feature control frame must contain the datum feature references that are applicable. Any difference in the

Copyright ASME International
Provided by IHS under license with ASME
No reproduction or networking permitted without license from IHS
Not for Resale

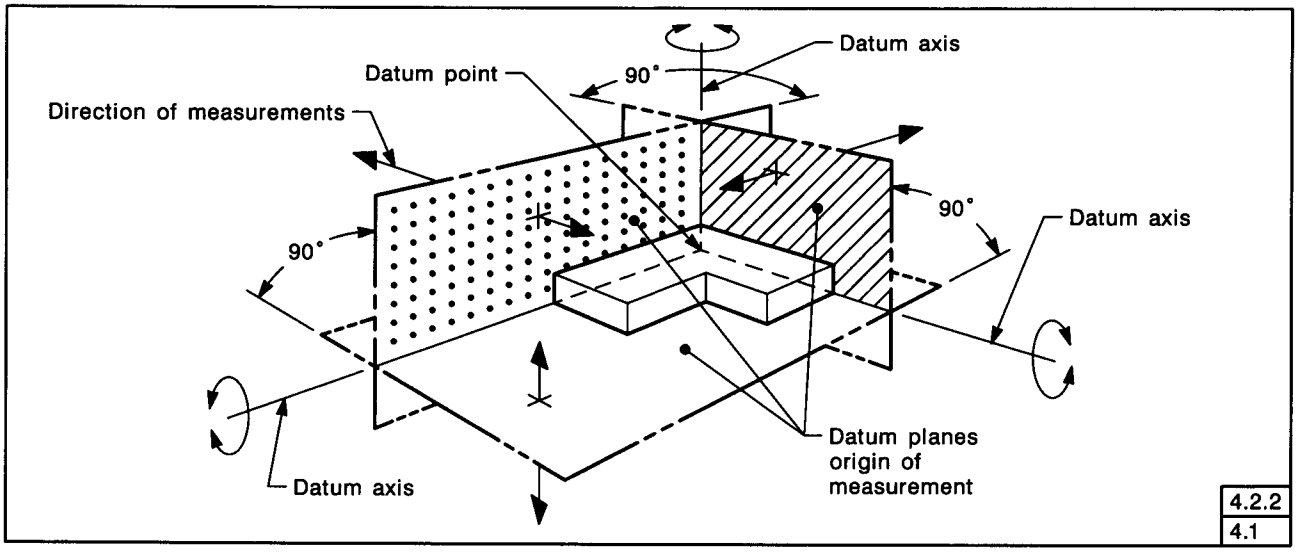

FIG. 4-1 DATUM REFERENCE FRAME

order of precedence or in the material condition of any datum features referenced in multiple feature control frames requires different datum simulation methods and, consequently, establishes a different datum reference frame. See para. 4.5.11.

4.3 DATUM FEATURES

A datum feature is selected on the basis of its geometric relationship to the toleranced feature and the requirements of the design. To ensure proper assembly, corresponding interfacing features of mating parts should be selected as datum features. However, a datum feature should be accessible on the part and be of sufficient size to permit its use. Datum features must be readily discernible on the part. Therefore, in the case of symmetrical parts or parts with identical features, physical identification of the datum feature on the part may be necessary.

4.3.1 Temporary and Permanent Datum Features. Selected datum features of in-process parts, such as castings, forgings, machinings, or fabrications, may be used temporarily for the establishment of machined surfaces to serve as permanent datum features. Such temporary datum features may or may not be subsequently removed by machining. Permanent datum features should be surfaces or diameters not appreciably changed by subsequent processing operations.

4.3.2 Datum Feature Identification. Datum features are identified on the drawing by means of a datum feature symbol. The datum feature symbol identifies physical features and shall not be applied to center lines, center planes, or axes except as defined in paras. 4.6.6 and 4.6.7.

4.3.3 Datum Feature Controls. Measurements made from a datum reference frame do not take into account any variations of the datum features. Consideration shall be given to controlling the desired accuracy of the datum features by applying appropriate geometric tolerances. Where a control of an entire feature becomes impracticable, use of datum targets may be considered or a partial surface may be designated as the datum feature. See paras. 4.5.10 and 4.6.

4.4 SPECIFYING DATUM FEATURES IN AN ORDER OF PRECEDENCE

Datum features must be specified in an order of precedence to position a part properly on the datum reference frame. Figure 4-2 illustrates a part where the datum features are plane surfaces. The desired order of precedence is indicated by entering the appropriate datum feature reference letters, from left to right, in the feature control frame. In Fig. 4-2(a), the datum features are identified as surfaces D, E, and F. These surfaces are most important to the design and function of the part, as illustrated by Fig. 4-2(b). Surfaces D, E, and F are the primary, secondary, and tertiary datum features, respectively, since they appear in that order in the feature control frame.

NOTE: When necessary to relate linear and angular dimensions to a datum reference frame, the desired order of precedence may be indicated by a note such as: UNLESS OTHERWISE SPECI-

Copyright ASME International
Provided by IHS under license with ASME
No reproduction or networking permitted without license from IHS
Not for Resale

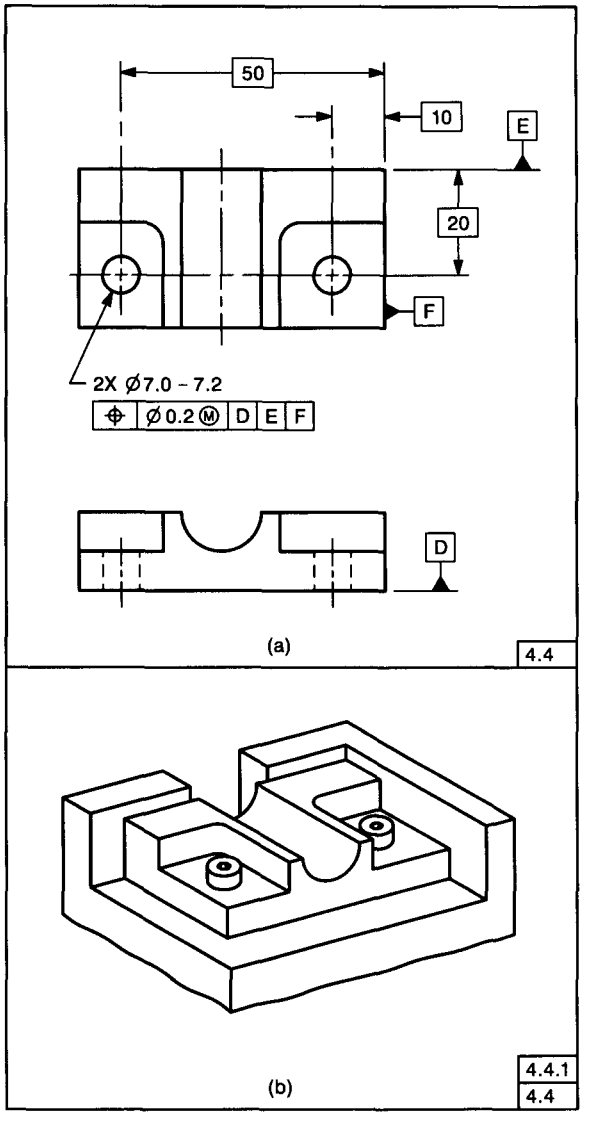

FIG. 4-2 PART WHERE DATUM FEATURES ARE PLANE SURFACES

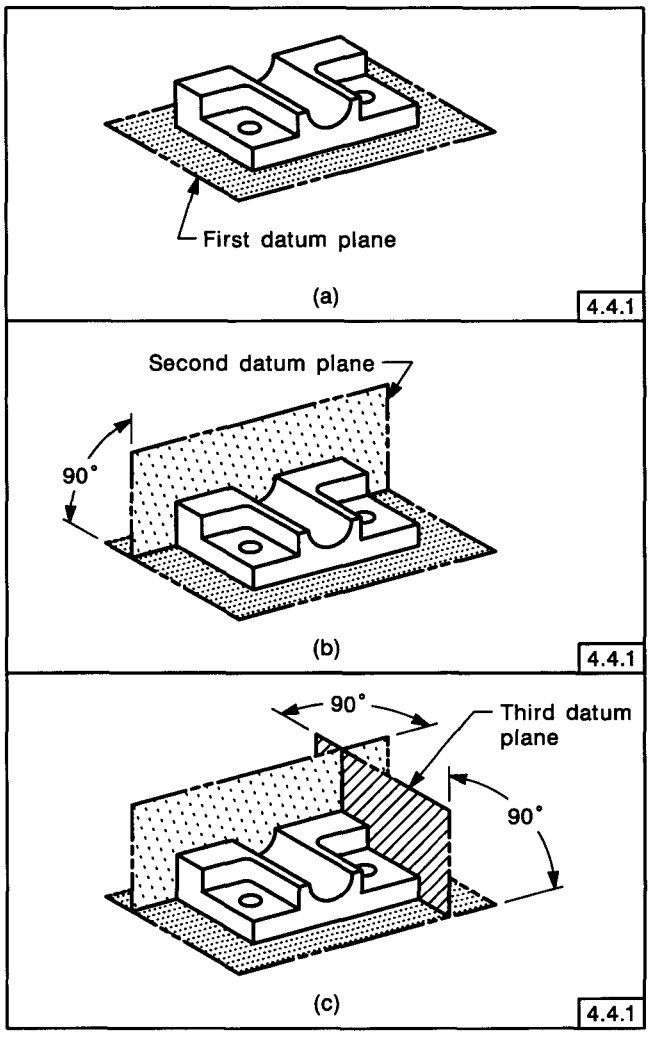

FIG. 4-3 SEQUENCE OF DATUM FEATURES RELATES PART TO DATUM REFERENCE FRAME

FIED, DIMENSIONS ARE RELATED TO DATUM A (PRIMARY), DATUM B (SECONDARY), AND DATUM C (TERTIARY). This note is not to be used in lieu of indicating datum references in a feature control frame for geometric tolerancing applications.

4.4.1 Positioning Parts With Plane Surface Datum Features on Datum Reference Frame. Figure 4-3 illustrates the sequence for positioning the part shown in Fig. 4-2 on a datum reference frame that is simulated by the processing equipment. Where a surface is specified as a datum feature without qualification, a high point or points anywhere on the entire surface must contact the datum plane. The primary datum feature relates the part to the datum reference frame by bringing a minimum of three points on the surface into contact with the first datum plane. See Fig. 4-3(a). The part is further related to the frame by bringing at least two points of the secondary datum feature into contact with the second datum plane. See Fig. 4-3(b). The relationship is completed by bringing at least one point of the tertiary datum feature into contact with the third datum plane. See Fig. 4-3(c). As measurements are made from simulated datum planes, positioning of the part on a datum reference frame in this manner ensures a common basis for measurements.

4.4.1.1 Parts With Inclined Datum Features. For parts with inclined datum features as shown in Fig. 4-4, a true contacting plane is oriented at the basic angle of the feature. The corresponding plane of the datum reference frame is rotated through

Copyright ASME International
Provided by IHS under license with ASME
No reproduction or networking permitted without license from IHS
Not for Resale

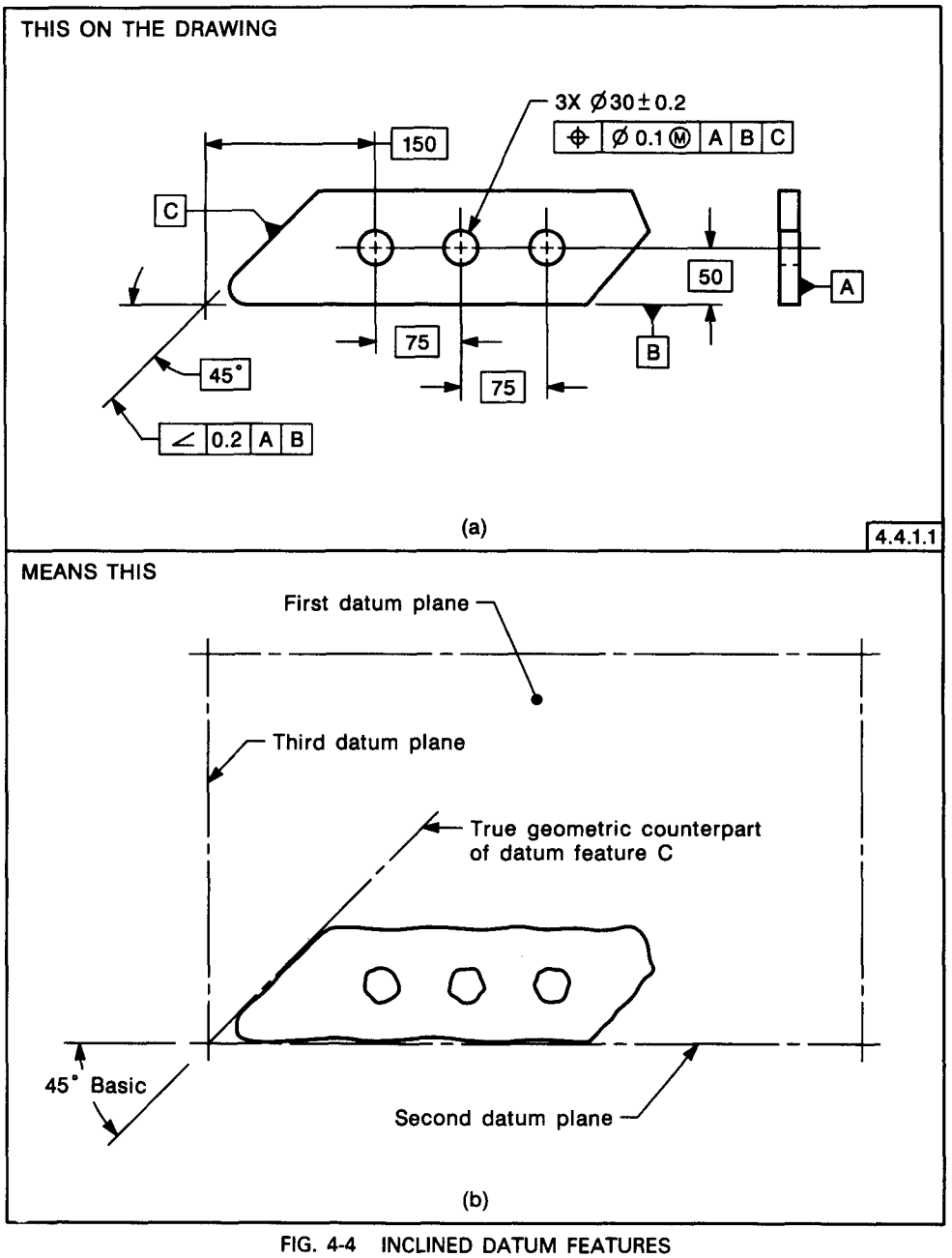

FIG. 4-4 INCLINED DATUM FEATURES

Copyright ASME International
Provided by IHS under license with ASME
No reproduction or networking permitted without license from IHS
Not for Resale

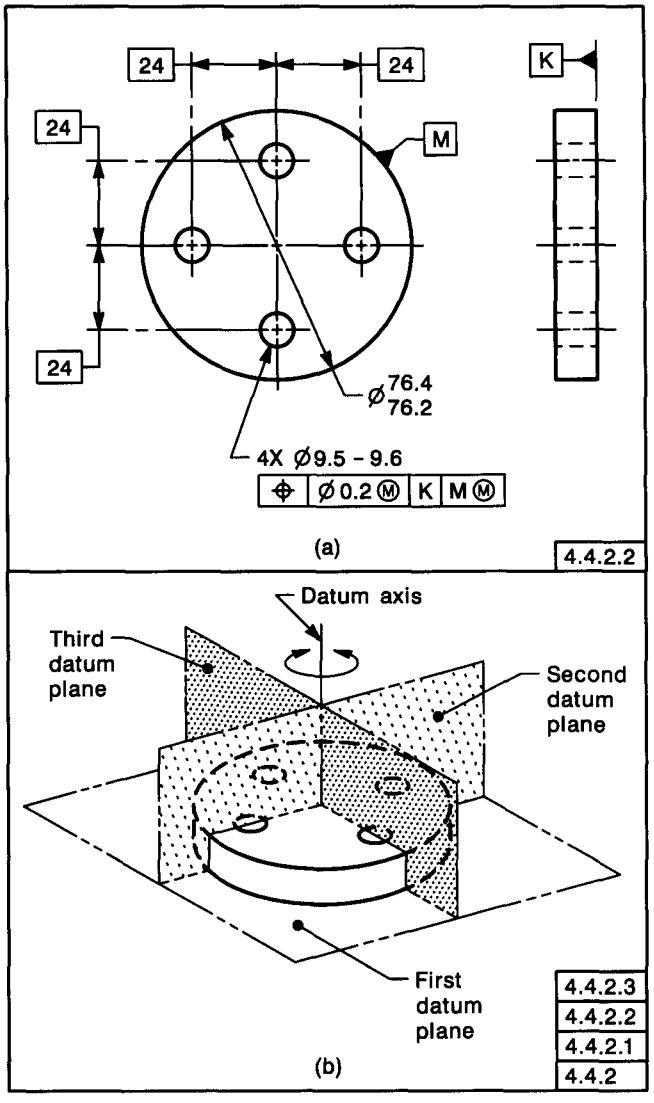

FIG. 4-5 PART WITH CYLINDRICAL DATUM FEATURE

this same basic angle to be mutually perpendicular to the other two planes. For this method of establishing a datum reference frame, the angle must be indicated as basic.

4.4.2 Parts With Cylindrical Datum Features. A cylindrical datum feature is always associated with two theoretical planes intersecting at right angles on the datum axis. The datum of a cylindrical surface is the axis of the true geometric counterpart of the datum feature (for example, the actual mating envelope or the virtual condition boundary), and simulated by the axis of a cylinder in the processing equipment. This axis serves as the origin of measurement from which other features of the part are located. See Figs. 4-5, 4-11, and 4-12.

4.4.2.1 Cylindrical Datum Feature. Figure 4-5 illustrates a part having a cylindrical datum feature. Primary datum feature K relates the part to the first datum plane. Since secondary datum feature M is cylindrical, it is associated with two theoretical planes, the second and third in a three-plane relationship.

4.4.2.2 Datum Axis and Two Planes. These two theoretical planes are represented on a drawing by center lines crossing at right angles, as in Fig. 4-5(a). The intersection of these planes coincides with the datum axis. See Fig. 4-5(b). Once established, the datum axis becomes the origin for related dimensions while the second and third planes indicate the direction of measurements.

4.4.2.3 Orientation of Two Planes. In Fig. 4-5, the rotational orientation of the second and third planes of the datum reference frame is not specified, as rotation of the pattern of holes about the datum axis has no effect on the function of the part. In such cases, only two datum features are referenced in the feature control frame:

(a) primary datum feature K, that establishes a datum plane; and

(b) secondary datum feature M, that establishes a datum axis perpendicular to datum plane K. This axis is the intersection of the second and third datum planes.

4.4.3 Rotational Orientation. To establish rotational orientation of two planes about a datum axis, a third or tertiary datum feature is referenced in the feature control frame.

(a) Figure 4-6 illustrates rotational orientation of the two planes intersecting through shaft B, the secondary datum feature, established by the center plane of slot C, the tertiary datum feature. Figure 4-7 illustrates the development of the theoretical datum reference frame for the positional tolerance of the three holes in Fig. 4-6.

(b) Figure 4-8 illustrates rotational orientation of the two planes intersecting through hole B, the secondary datum feature. Orientation is established by the width of hole C, the tertiary datum feature. Figure 4-9 illustrates the development of the theoretical datum reference frame for the positional tolerance of the other holes applied in Fig. 4-8.

4.5 ESTABLISHING DATUMS

The following paragraphs define the criteria for establishing datums from datum features.

4.5.1 Datum Features Not Subject to Size Variations. Where a nominally flat surface is speci-

Copyright ASME International
Provided by IHS under license with ASME
No reproduction or networking permitted without license from IHS
Not for Resale

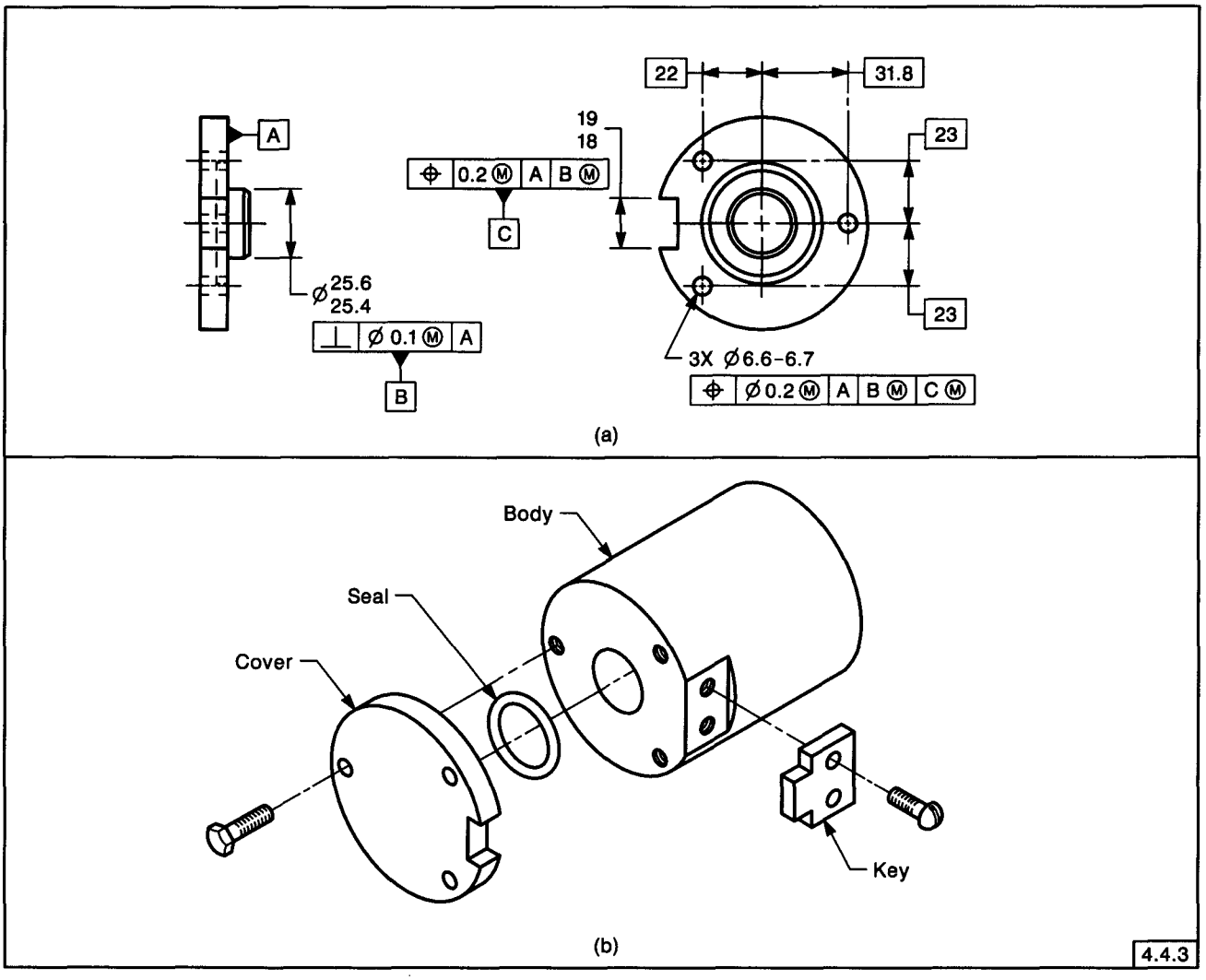

FIG. 4-6 PART WHERE ANGULAR ORIENTATION IS IMPORTANT

fied as a datum feature, the corresponding datum is simulated by a plane contacting points of that surface. See Fig. 4-10. The extent of contact depends on whether the surface is a primary, a secondary, or a tertiary datum feature. See para. 4.4. If irregularities on the surface of a primary or secondary datum feature are such that the part is unstable (that is, it wobbles) when brought into contact with the corresponding surface of a fixture, the part may be adjusted to an optimum position, if necessary, to simulate the datum. See para. 4.3.3.

4.5.2 Datum Features Subject to Size Variations. Datum features, such as diameters and widths, differ from singular flat surfaces in that they are subject to variations in size as well as form. Because variations are allowed by the size tolerance, it becomes necessary to determine whether RFS, MMC, or LMC applies in each case. See para. 2.8.

4.5.3 Specifying Datum Features RFS. Where a datum feature of size is applied on an RFS basis, the datum is established by physical contact between the feature surface(s) and surface(s) of the processing equipment. A machine element that is variable in size (such as a chuck, mandrel, vise, or centering device) is used to simulate a true geometric counterpart of the feature and to establish the datum axis or center plane.

(a) Primary Datum Feature — Diameter RFS. The simulated datum is the axis of the true geometric counterpart of the datum feature. The true geometric counterpart (or actual mating envelope) is the smallest circumscribed (for an external feature) or largest inscribed (for an internal feature) perfect cylinder that contacts the datum feature surface. See Figs. 4-11 and 4-12.

(b) Primary Datum Feature — Width RFS. The simulated datum is the center plane of the true geo-

Copyright ASME International
Provided by IHS under license with ASME
No reproduction or networking permitted without license from IHS
Not for Resale

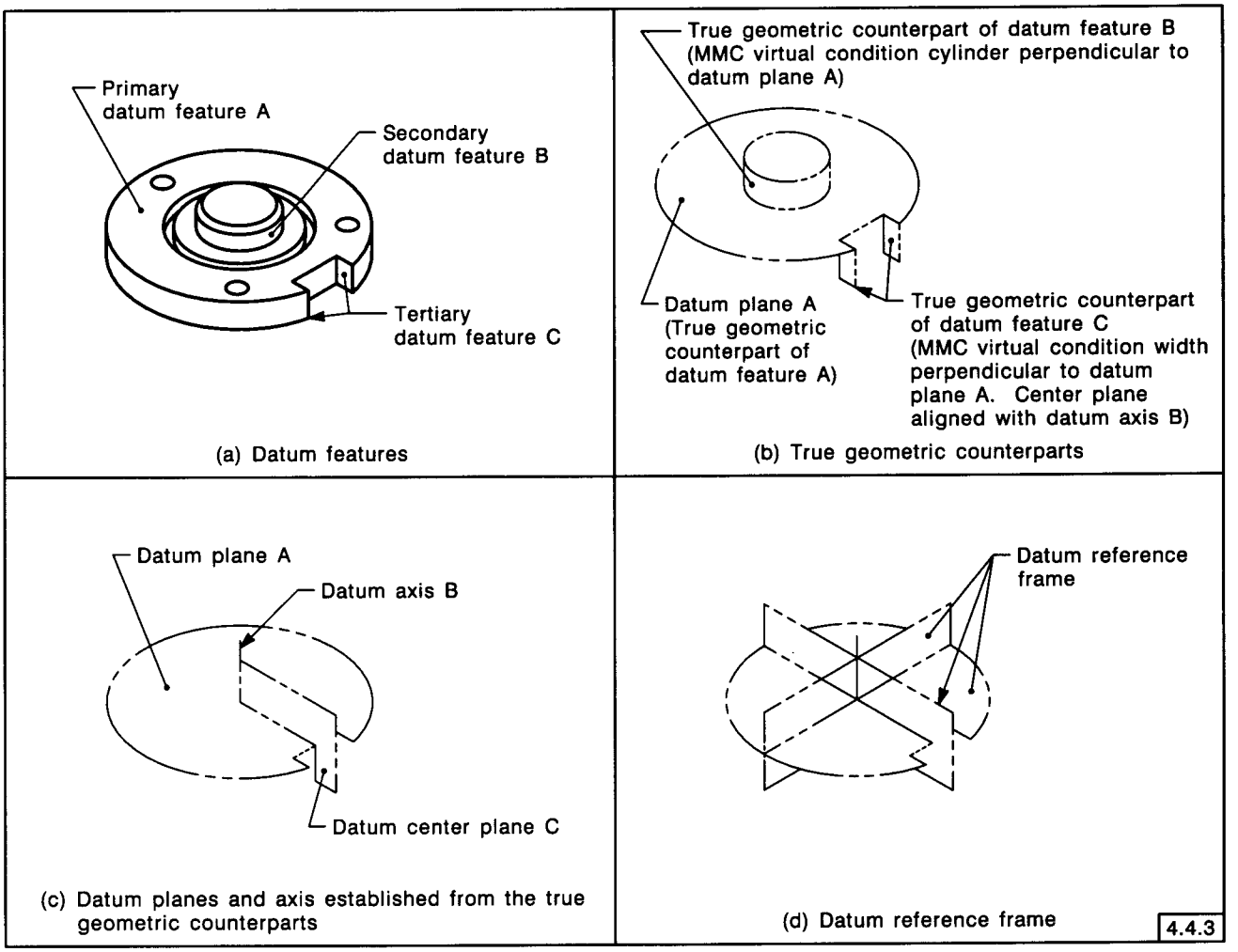

FIG. 4-7 DEVELOPMENT OF A DATUM REFERENCE FRAME FOR PART IN FIG. 4-6

metric counterpart of the datum feature. The true geometric counterpart (or actual mating envelope) is two parallel planes at minimum separation (for an external feature) or maximum separation (for an internal feature) that contact the corresponding surfaces of the datum feature. See Figs. 4-13 and 4-14.

(c) Secondary Datum Feature RFS — Diameter or Width. For both external and internal features, the secondary datum (axis or center plane) is established in the same manner as indicated in (a) and (b) above with an additional requirement: The contacting cylinder or parallel planes of the true geometric counterpart must be oriented to the primary datum (usually a plane) — that is, the actual mating envelope relative to the primary datum. Datum B in Fig. 4-15 illustrates this principle for diameters; the same principle applies for widths.

(d) Tertiary Datum Feature — Diameter or Width RFS. For both external and internal features, the tertiary datum (axis or center plane) is established in the same manner as indicated in (c) above with an additional requirement: The contacting cylinder or parallel planes must be oriented in relation to both the primary and the secondary datum — that is, the actual mating envelope relative to the primary and secondary datum. The tertiary datum feature may be aligned with a datum axis as in Fig. 4-15 or offset from a plane of the datum reference frame.

4.5.4 Specifying Datum Features at MMC. Where a datum feature of size is applied on an MMC basis, machine and gaging elements in the processing equipment that remain constant in size may be used to simulate a true geometric counterpart of the feature and to establish the datum. In each case, the size of the true geometric counterpart is determined by the specified MMC limit of size of the datum feature, or its MMC virtual condition, where applicable.

4.5.4.1 Size of a Primary or Single Datum Feature. Where a primary or single datum feature

Copyright ASME International
Provided by IHS under license with ASME
No reproduction or networking permitted without license from IHS
Not for Resale

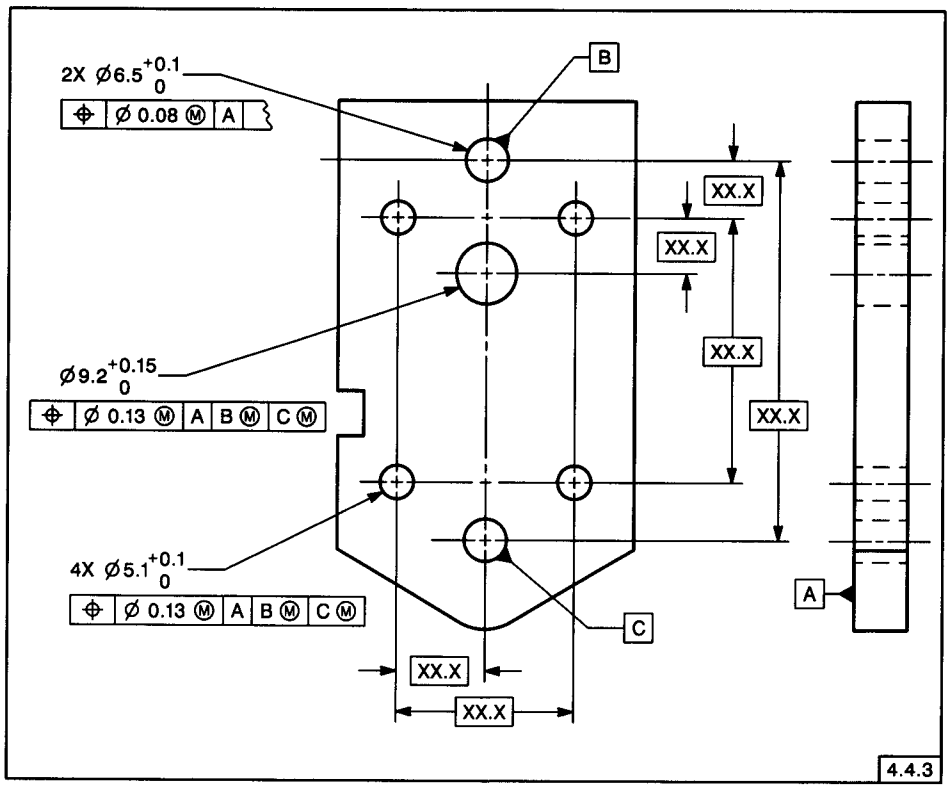

FIG. 4-8 ORIENTATION OF TWO DATUM PLANES THROUGH A HOLE

of size is controlled by a roundness or cylindricity tolerance, the size of the true geometric counterpart used to establish the simulated datum is the MMC limit of size. Where a straightness tolerance is applied on an MMC basis, the size of the true geometric counterpart is the MMC virtual condition. See Fig. 6-3. Where a straightness tolerance is applied on an RFS basis, the size of the true geometric counterpart is the applicable inner or outer boundary. See Fig. 6-2.

4.5.4.2 Size of a Secondary or Tertiary Datum Feature. Where secondary or tertiary datum features of size in the same datum reference frame are controlled by a specified tolerance of location or orientation with respect to each other, the size of the true geometric counterpart used to establish the simulated datum is the virtual condition of the datum feature. See para. 2.11.1 and Fig. 4-16. This example illustrates both secondary and tertiary datum features specified at MMC but simulated at virtual condition.

4.5.4.3 Determining Size. An analysis of tolerance controls applied to a datum feature is necessary in determining the size for simulating its true geometric counterpart. Consideration must be given to the effects of the difference in size between the applicable virtual condition of a datum feature and its MMC limit of size. Where a virtual condition equal to MMC is the design requirement, a zero geometric tolerance at MMC is specified. See para. 5.3.3 and Fig. 6-41.

4.5.5 Specifying Datum Features at LMC. Where a datum feature of size is specified on an LMC basis, a primary datum may be established as the axis or center plane of the LMC boundary. A secondary or tertiary datum may be established as the axis or center plane of the true geometric counterpart of the feature's virtual condition size. See para. 2.11 and Fig. 4-17. This example illustrates both secondary and tertiary datum features specified at LMC but simulated at virtual conditions.

4.5.6 Effects of Datum Precedence and Material Condition. Where datums specified in an order of precedence include a feature of size, the material condition at which the datum feature applies must be

Copyright ASME International
Provided by IHS under license with ASME
No reproduction or networking permitted without license from IHS
Not for Resale

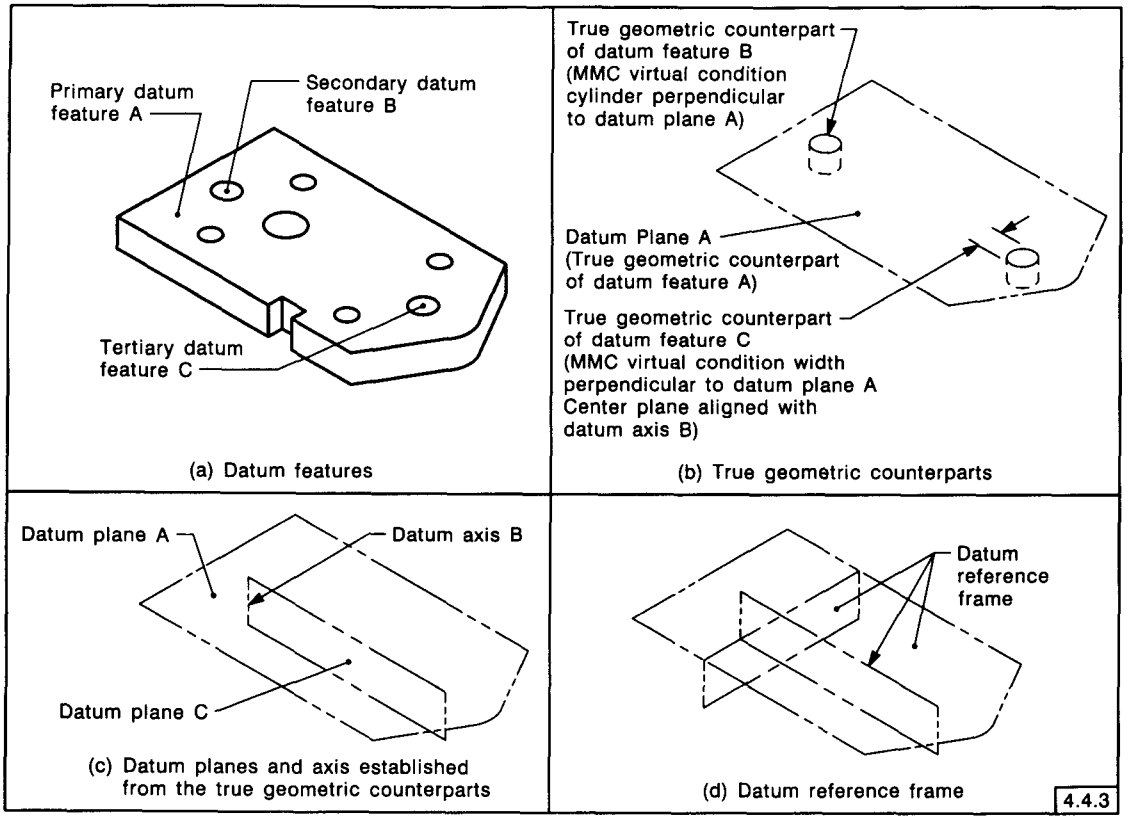

FIG. 4-9 DEVELOPMENT OF A DATUM REFERENCE FRAME FOR PART IN FIG. 4-8

determined. See para. 4.5.2. The effect of its material condition and order of precedence should be considered relative to fit and function of the part. Figure 4-18(a) illustrates a part with a pattern of holes located in relation to diameter A and surface B. As indicated by asterisks, datum requirements may be specified in three different ways.

4.5.6.1 Cylindrical Feature at RFS Primary. In Fig. 4-18(b), diameter A is the primary datum feature and RFS is applied; surface B is the secondary datum feature. The datum axis is the axis of the smallest circumscribed cylinder that contacts diameter A — that is, the actual mating envelope of diameter A. This cylinder encompasses variations in the size of A within specified limits. However, any variation in perpendicularity between surface B and diameter A, the primary datum feature, will affect the degree of contact of surface B with its datum plane.

4.5.6.2 Surface Primary. In Fig. 4-18(c), surface B is the primary datum feature; diameter A is the secondary datum feature and RFS is applied. The datum axis is the axis of the smallest circumscribed cylinder that contacts diameter A and is perpendicular to the datum plane — that is, the actual mating envelope of a diameter that is perpendicular to datum plane B. In addition to size variations, this cylinder encompasses any variation in perpendicularity between diameter A and surface B, the primary datum feature.

4.5.6.3 Cylindrical Feature at MMC Secondary. In Fig. 4-18(d), surface B is the primary datum feature; diameter A is the secondary datum feature and MMC is applied. The datum axis is the axis of a virtual condition cylinder of fixed size that is perpendicular to the datum plane B. Variations in the size and perpendicularity of datum feature A are permitted to occur within this cylindrical boundary. Furthermore, as the actual mating envelope of datum feature A departs from its MMC size, a displacement of its axis relative to the datum axis is allowed. See para. 5.3.2.2.

4.5.7 Multiple Datum Features. Where more than one datum feature is used to establish a single datum, the appropriate datum reference letters and

Copyright ASME International
Provided by IHS under license with ASME
No reproduction or networking permitted without license from IHS
Not for Resale

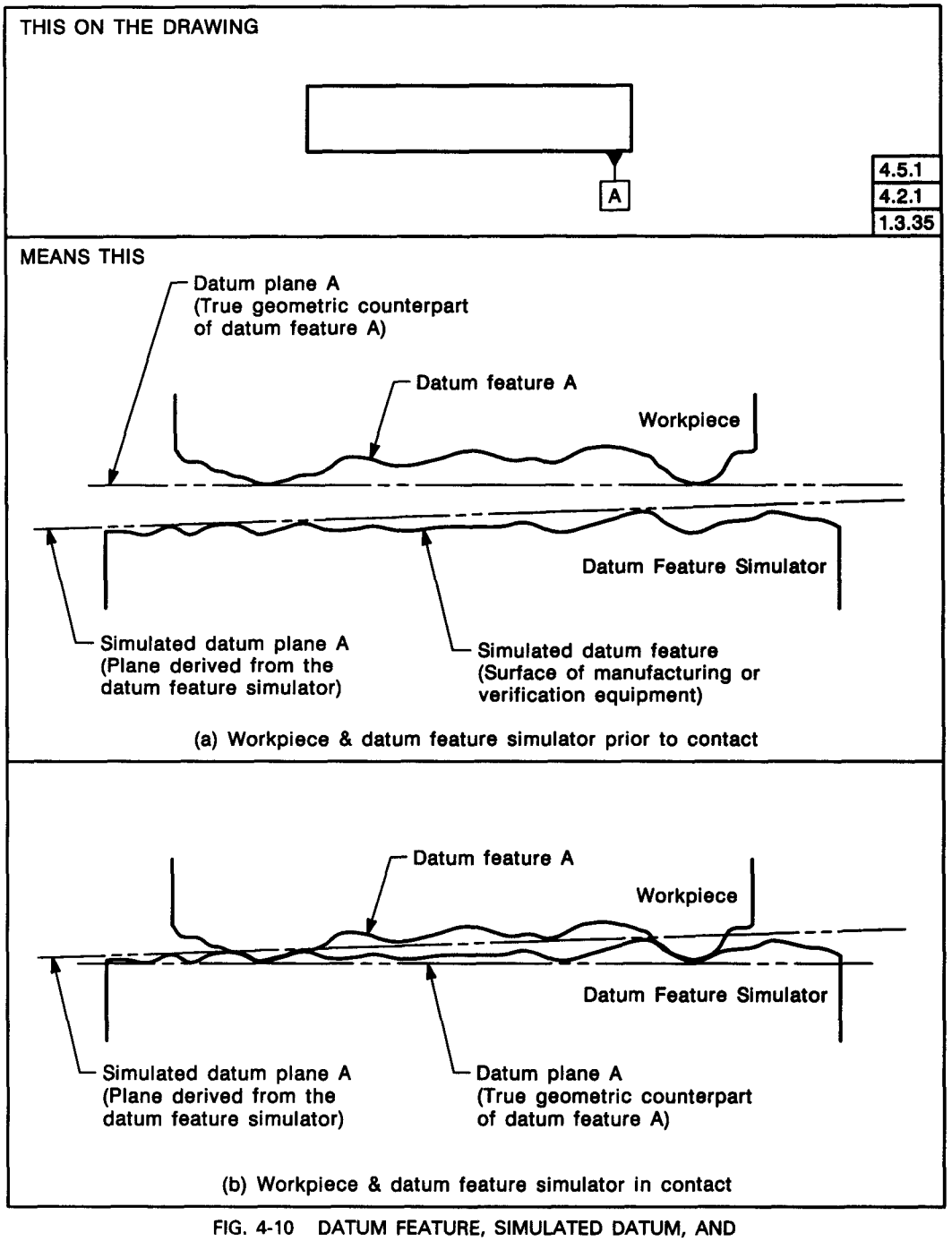

FIG. 4-10 DATUM FEATURE, SIMULATED DATUM, AND THEORETICAL DATUM PLANE

Copyright ASME International
Provided by IHS under license with ASME
No reproduction or networking permitted without license from IHS
Not for Resale

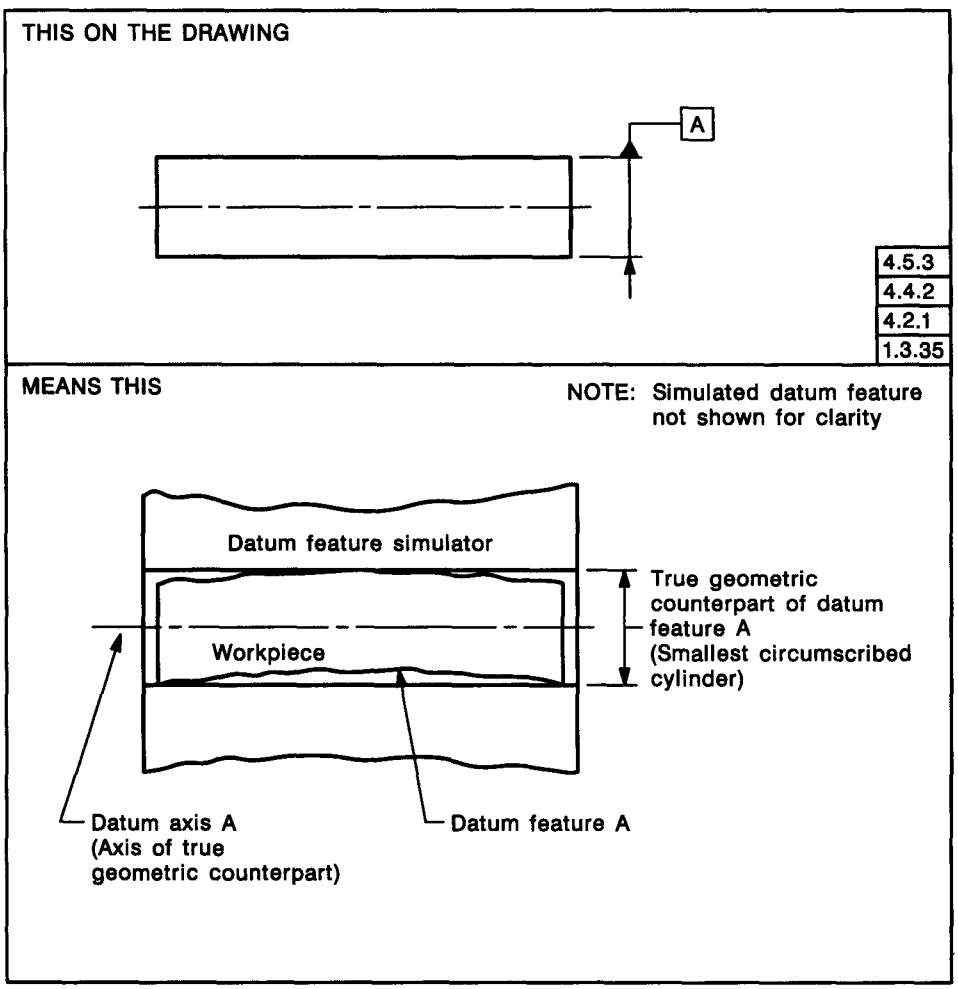

FIG. 4-11 PRIMARY EXTERNAL DATUM DIAMETER — RFS

Copyright ASME International
Provided by IHS under license with ASME
No reproduction or networking permitted without license from IHS
Not for Resale

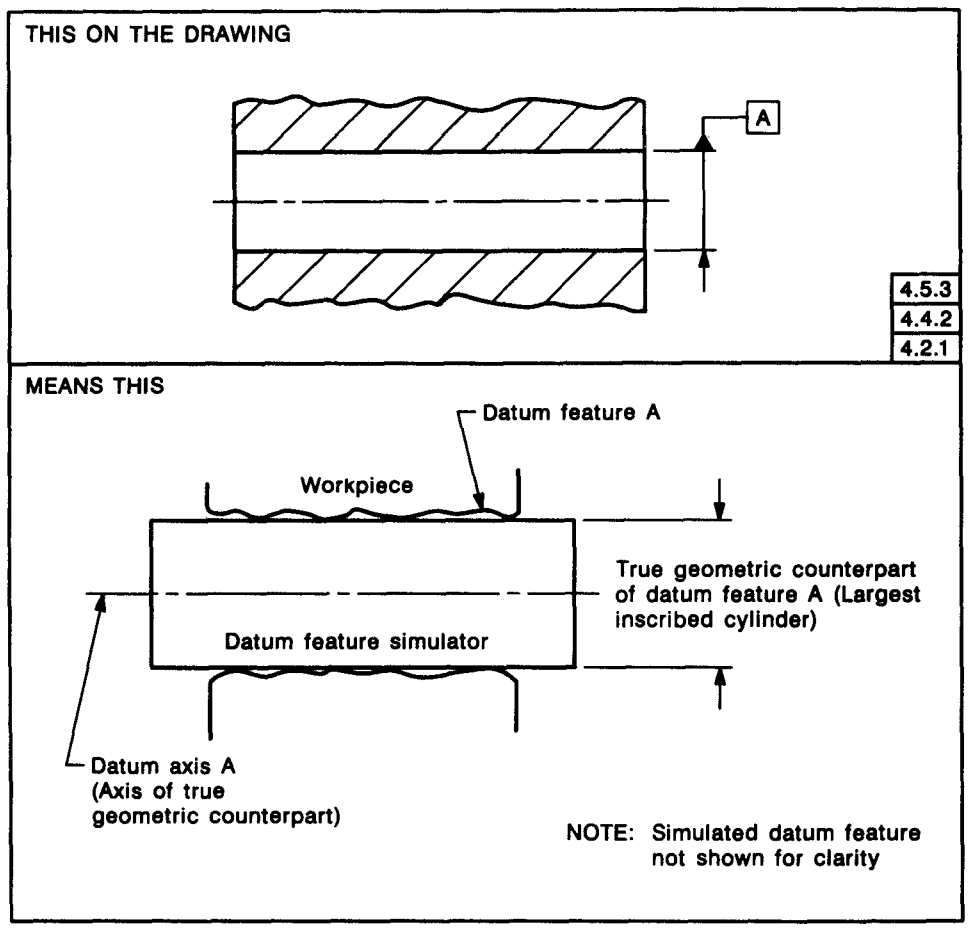

FIG. 4-12 PRIMARY INTERNAL DATUM DIAMETER — RFS

Copyright ASME International
Provided by IHS under license with ASME
No reproduction or networking permitted without license from IHS
Not for Resale

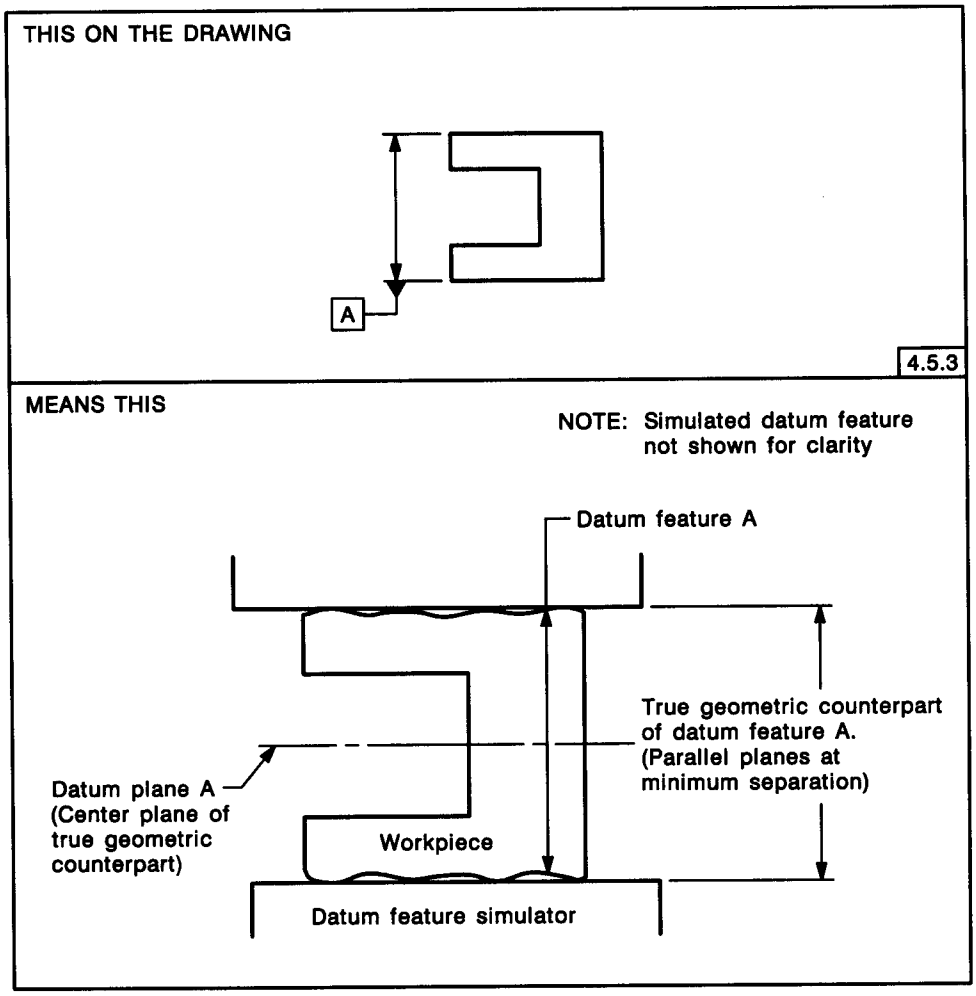

FIG. 4-13 PRIMARY EXTERNAL DATUM WIDTH — RFS

Copyright ASME International
Provided by IHS under license with ASME
No reproduction or networking permitted without license from IHS
Not for Resale

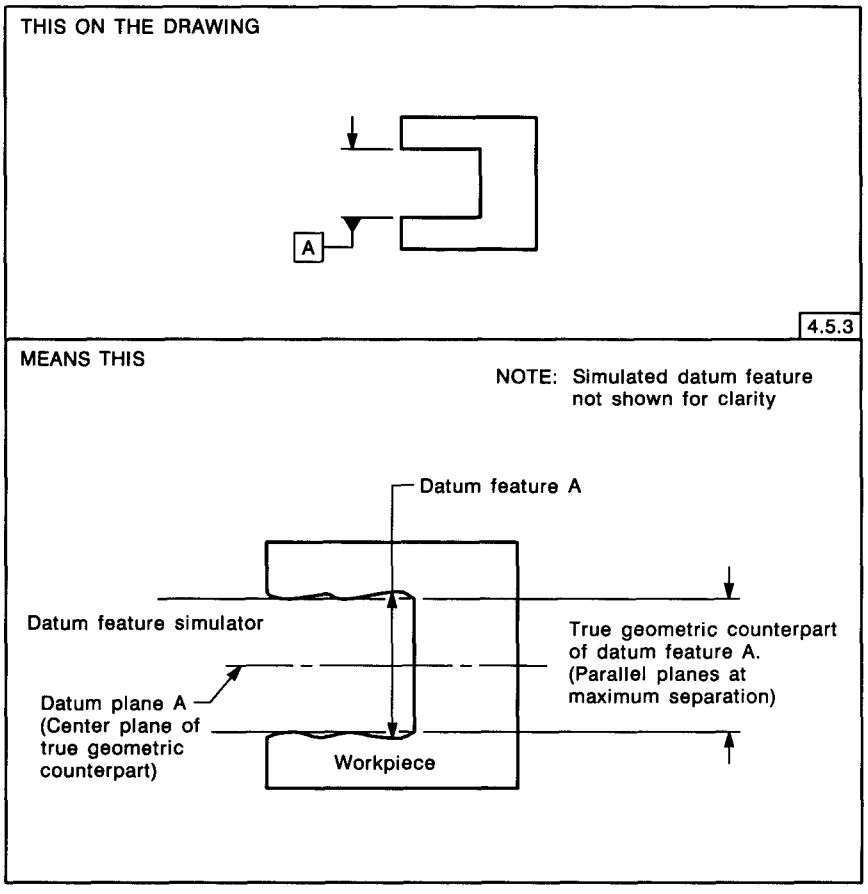

FIG. 4-14 PRIMARY INTERNAL DATUM WIDTH — RFS

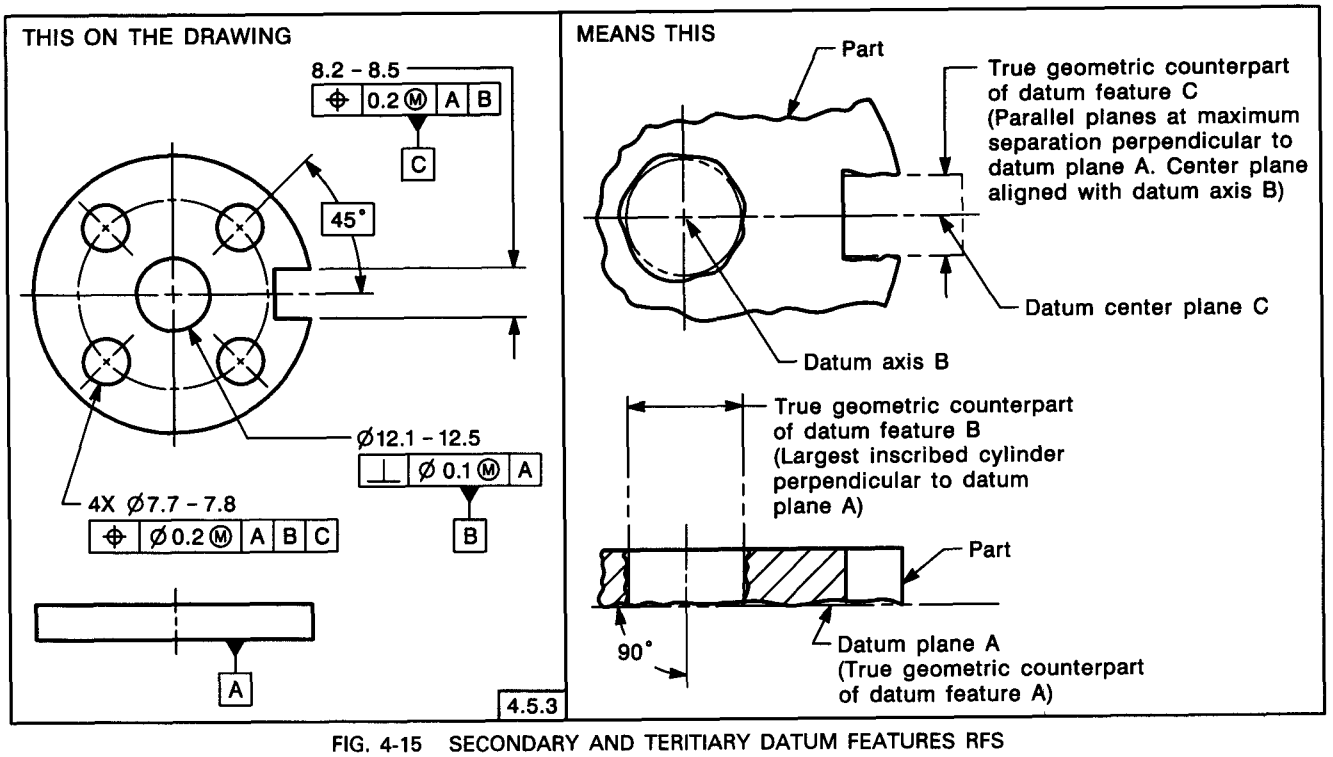

FIG. 4-15 SECONDARY AND TERITIARY DATUM FEATURES RFS

Copyright ASME International
Provided by IHS under license with ASME
No reproduction or networking permitted without license from IHS
Not for Resale

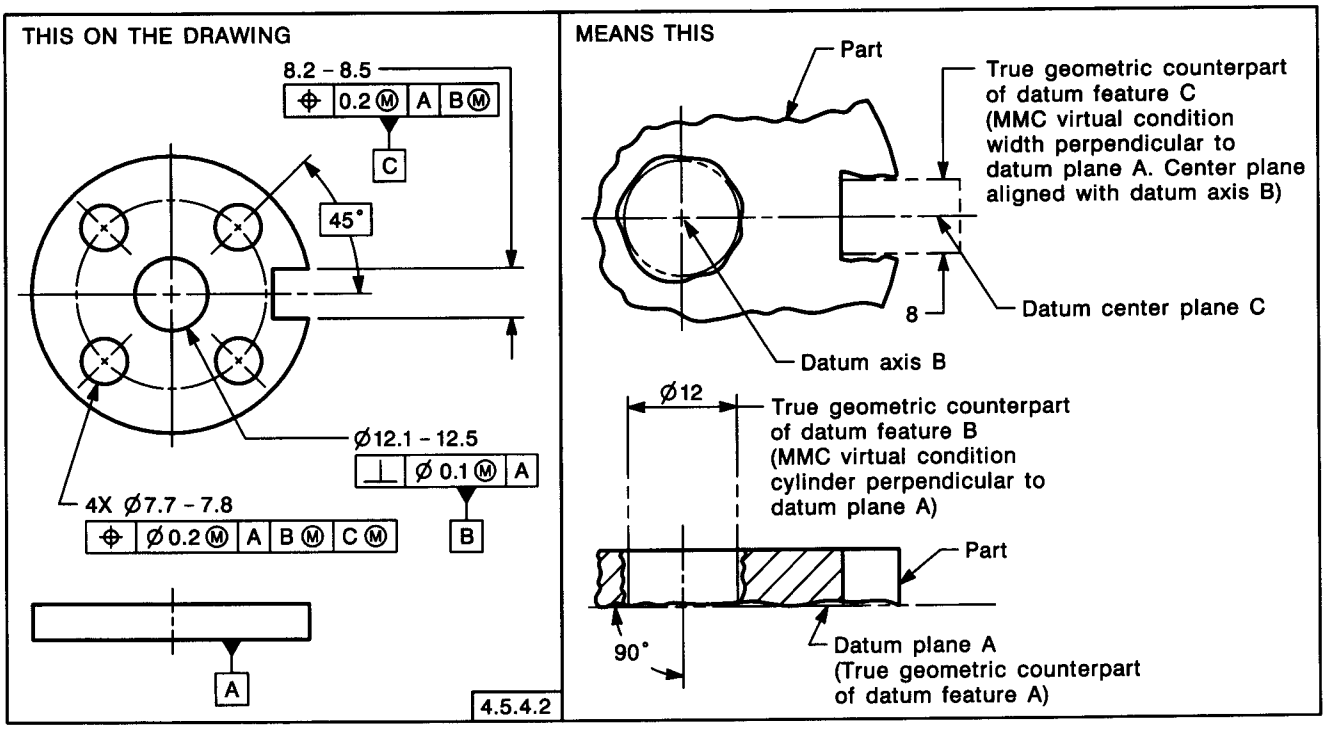

FIG. 4-16 SECONDARY AND TERITIARY DATUM FEATURES AT MMC

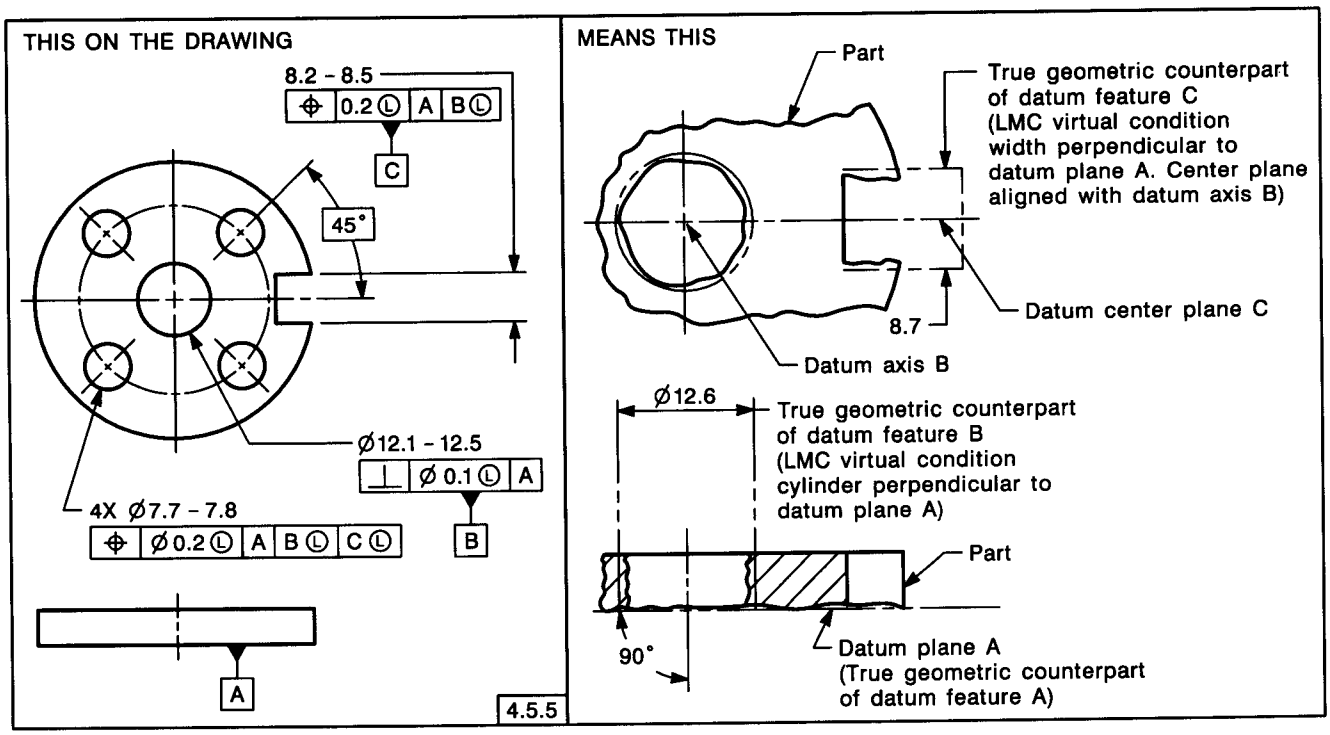

FIG. 4-17 SECONDARY AND TERITIARY DATUM FEATURES AT LMC

Copyright ASME International
Provided by IHS under license with ASME
No reproduction or networking permitted without license from IHS
Not for Resale

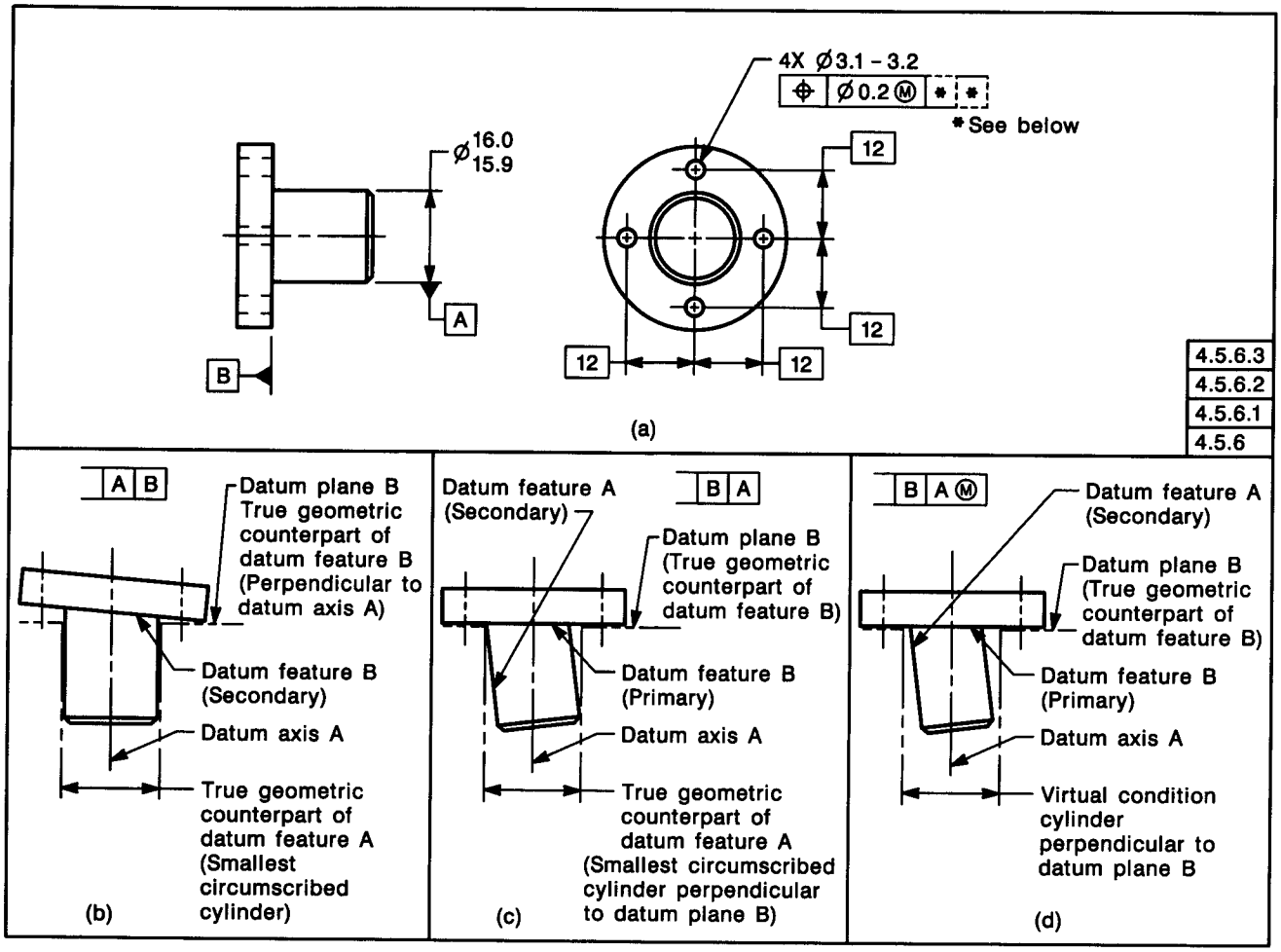

FIG. 4-18 EFFECT OF MATERIAL CONDITION AND DATUM PRECEDENCE

Copyright ASME International
Provided by IHS under license with ASME
No reproduction or networking permitted without license from IHS
Not for Resale

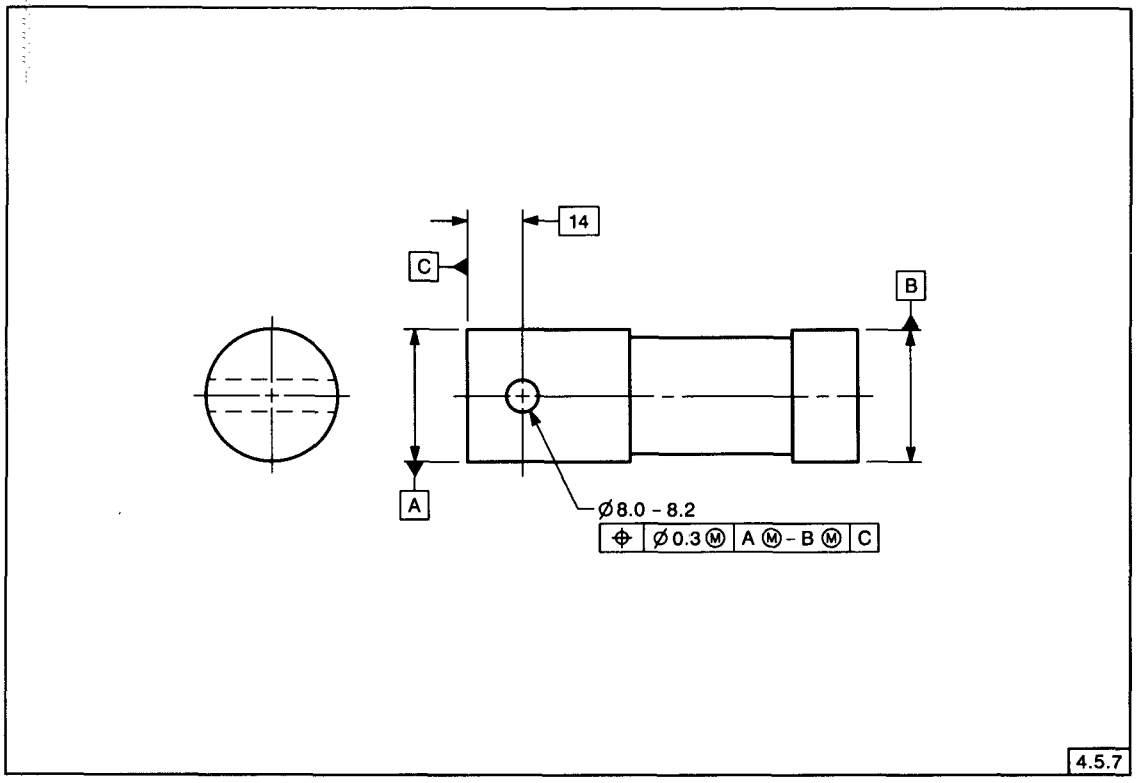

FIG. 4-19 TWO DATUM FEATURES, SINGLE DATUM AXIS

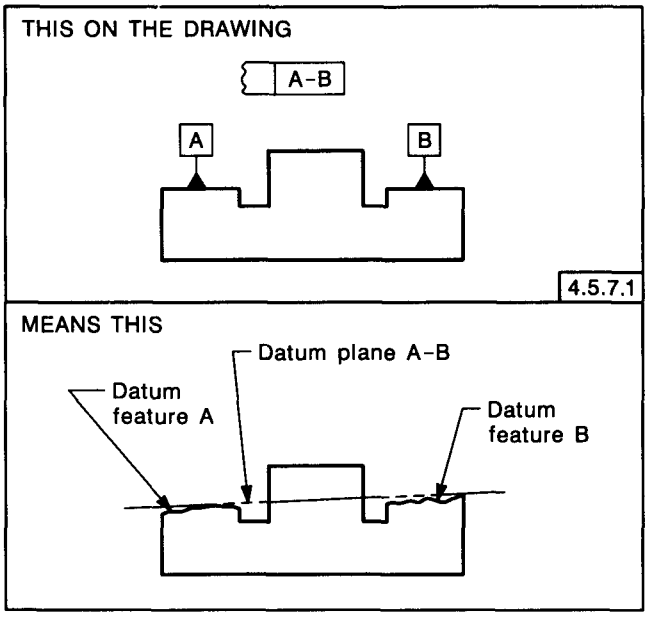

FIG. 4-20 TWO DATUM FEATURES, SINGLE DATUM PLANE

associated modifiers, separated by a dash, are entered in one compartment of the feature control frame. See para. 3.4.2 and Fig. 4-19. Since the features have equal importance, datum reference letters may be entered in any order within this compartment.

4.5.7.1 Simulation of a Single Datum Plane. Figure 4-20 is an example of a single datum plane simulated, as explained in para. 4.5.1, by simultaneously contacting the high points of two surfaces. Identification of two features to establish a single datum plane may be required where separation of the features is caused by an obstruction, such as in Fig. 4-20, or by a comparable opening (for example, a slot) of sufficient width. Where appropriate, an extension line may be used to indicate a continuation of one datum feature across slots or obstructions. For controlling coplanarity of these surfaces, see para. 6.5.6.

4.5.7.2 Single Axis of Two Coaxial Features. Figure 4-21 is an example of a single datum axis established by two coaxial diameters. The datum axis is simulated by simultaneously contacting the high points of both surfaces with two coaxial cylin-

Copyright ASME International
Provided by IHS under license with ASME
No reproduction or networking permitted without license from IHS
Not for Resale

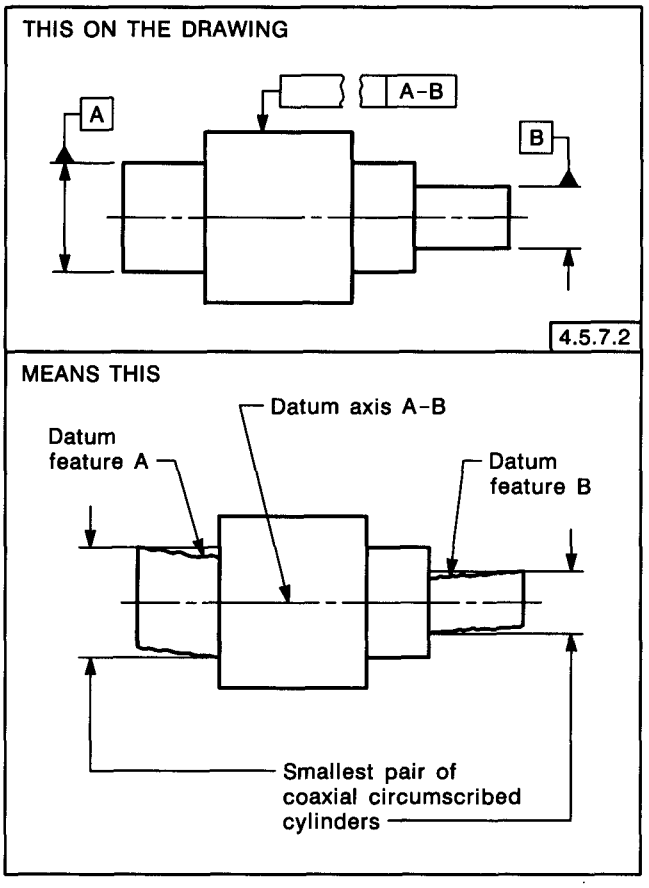

FIG. 4-21 TWO DATUM FEATURES AT RFS, SINGLE DATUM AXIS

ders, as explained in para. 4.5.3(a). A datum axis established by coaxial datum features is normally used as a primary datum. For one possible method of controlling the coaxiality of these diameters, see para. 6.7.1.3.4

4.5.8 Pattern of Features. Multiple features of size, such as a pattern of holes at MMC, may be used as a group to establish a datum when part function dictates. See Fig. 4-22. In this case, individual datum axes are established at the true position of each hole. These are the axes of true cylinders that simulate the virtual condition of the holes. When the part is mounted on the primary datum surface, the pattern of holes establishes the second and third datum planes of the datum reference frame. Where the secondary datum feature is referenced at MMC in the feature control frame, the axis of the feature pattern established by all the holes may depart from the axis of the datum reference frame as the datum feature departs from MMC.

4.5.9 Screw Threads, Gears, and Splines. Where a screw thread is specified as a datum reference, the datum axis is derived from the pitch cylinder, unless otherwise specified. See para. 2.9. Where a gear or spline is specified as a datum reference, a specific feature of the gear or spline must be designated to derive a datum axis. See para. 2.10. In general, these types of datum features should be avoided.

4.5.10 Partial Surfaces as Datum Features. It is often desirable to specify only part of a surface, instead of the entire surface, as defined in para. 4.4.1, to serve as a datum feature. This may be indicated by means of a chain line drawn parallel to the surface profile (dimensioned for length and location) as in Fig. 4-23, specified in note form, or by a datum target area as described in para. 4.6.1.3. Figure 4-23 illustrates a long part where holes are located only on one end.

4.5.10.1 Mathematically Defined Surface. It is sometimes necessary to identify a compound curve or a contoured surface as a datum feature. Such a feature can be used as a datum feature only when it can be mathematically defined and can be related to a three-plane datum reference frame. In such cases, the theoretically true geometric counterpart of the shape is used to establish the datum.

4.5.11 Multiple Datum Reference Frames. More than one datum reference frame may be necessary for certain parts, depending upon functional requirements. In Fig. 4-24, datum features A, B, and C establish one datum reference frame, while datum features D, B, and C and datum features D, E, and B establish different datum reference frames.

4.5.11.1 Functional Datum Features. Only the required datum features should be referenced in feature control frames when specifying geometric tolerances. An understanding of the geometric control provided by these tolerances (as explained in Sections 5 and 6) is necessary to determine effectively the number of datum references required for a given application. Additionally, functional requirements of the design should be the basis for selecting the related datum features to be referenced in the feature control frame. Figure 4-25 illustrates a part where three geometric tolerances are specified, each having the required number of datum references. Although common datum identifying letters appear in each frame, each combination is a different and independent requirement.

4.5.12 Simultaneous Requirements. Where two or more features or patterns of features are located by basic dimensions related to common datum

Copyright ASME International
Provided by IHS under license with ASME
No reproduction or networking permitted without license from IHS
Not for Resale

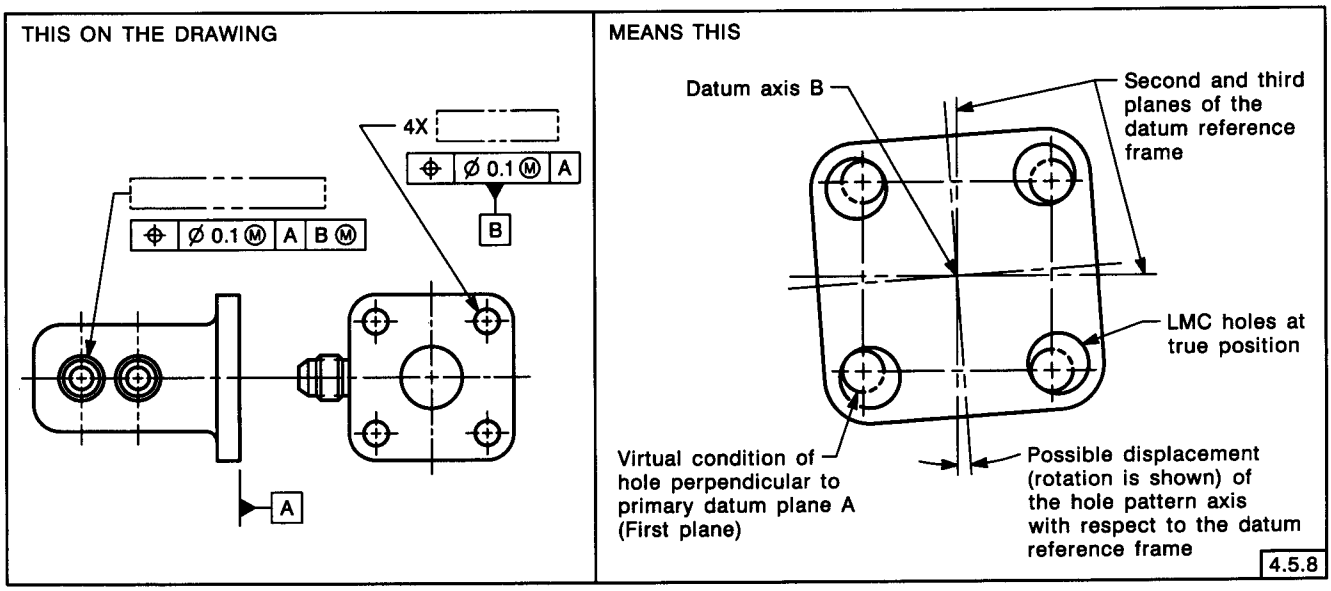

FIG. 4-22 HOLE PATTERN IDENTIFIED AS DATUM

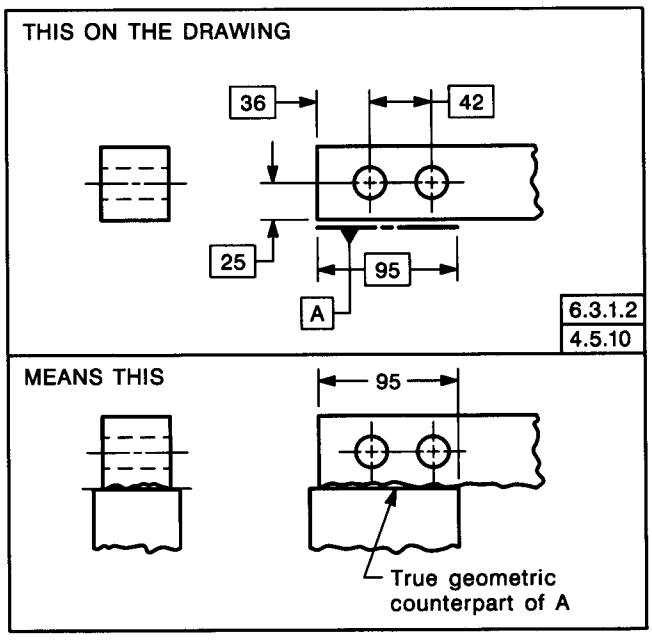

FIG. 4-23 PARTIAL DATUM

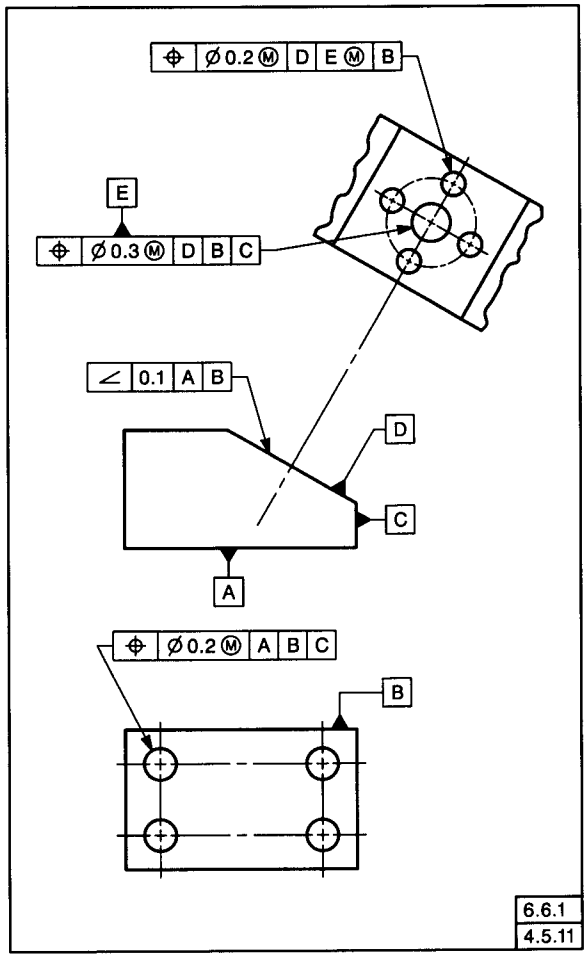

FIG. 4-24 INTERRELATED DATUM REFERENCE FRAMES

Copyright ASME International
Provided by IHS under license with ASME
No reproduction or networking permitted without license from IHS
Not for Resale

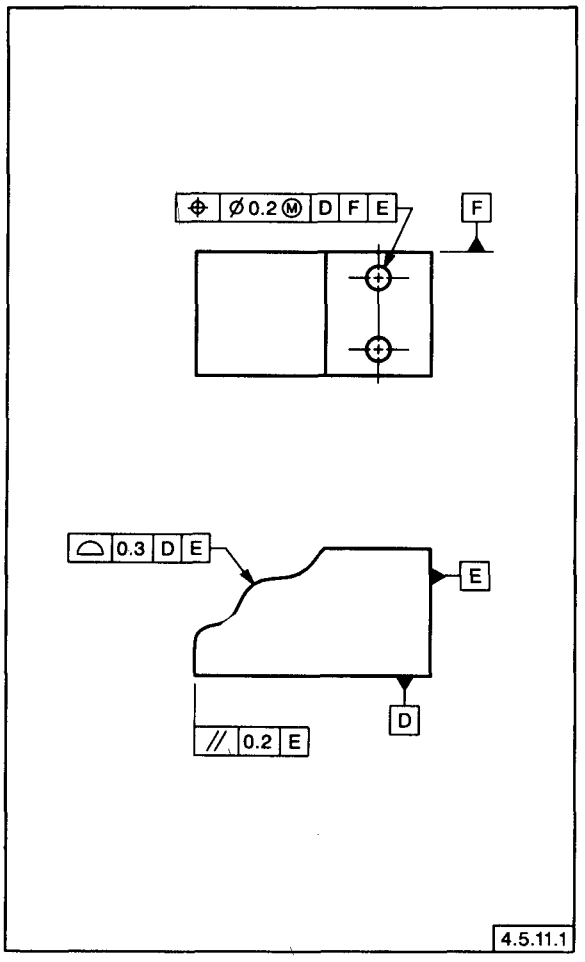

FIG. 4-25 MULTIPLE DATUM REFERENCE FRAMES

features referenced in the same order of precedence and at the same material condition, as applicable, they are considered a composite pattern with the geometric tolerances applied simultaneously as illustrated by Fig. 4-26. If such interrelationship is not required, a notation such as SEP REQT is placed adjacent to each applicable feature control frame. See para. 5.3.6.2, and Fig. 5-18.

4.5.12.1 Simultaneous Requirement, Composite Feature Control Frames. The principle stated in para. 4.5.12 does not apply to the lower segments of composite feature control frames. See paras. 5.3.6.2, 5.4.1, and 6.5.9. If a simultaneous requirement is desired for the lower segments of two or more composite feature control frames, a notation such as SIM REQT is placed adjacent to each applicable lower segment of the feature control frames.

4.6 DATUM TARGETS

Datum targets designate specific points, lines, or areas of contact on a part that are used in establishing a datum reference frame. Because of inherent irregularities, the entire surface of some features cannot be effectively used to establish a datum. Examples are nonplanar or uneven surfaces produced by casting, forging, or molding; surfaces of weldments; and thin-section surfaces subject to bowing, warping, or other inherent or induced distortions. Datum targets and datum features (as described earlier) may be combined to establish a datum reference frame.

4.6.1 Datum Target Symbols. Points, lines, and areas on datum features are designated on the drawing by means of a datum target symbol. See Fig. 3-6. The symbol is placed outside the part outline with a radial (leader) line directed to the target. The use of a solid radial (leader) line indicates that the datum target is on the near (visible) surface. The use of a dashed radial (leader) line, as in Fig. 4-38, indicates that the datum target is on the far (hidden) surface. The datum feature itself is usually identified with a datum feature symbol.

4.6.1.1 Datum Target Points. A datum target point is indicated by the target point symbol, dimensionally located on a direct view of the surface. Where there is no direct view, the point location is dimensioned on two adjacent views. See Fig. 4-27.

4.6.1.2 Datum Target Lines. A datum target line is indicated by the target point symbol on an edge view of the surface, a phantom line on the direct view, or both. See Fig. 4-28. Where the length of the datum target line must be controlled, its length and location are dimensioned.

4.6.1.3 Datum Target Areas. Where it is determined that an area or areas of contact is necessary to assure establishment of the datum (that is, where spherical or pointed pins would be inadequate), a target area of the desired shape is specified. The datum target area is indicated by section lines inside a phantom outline of the desired shape, with controlling dimensions added. The diameter of circular areas is given in the upper half of the datum target symbol. See Fig. 4-29(a). Where it becomes impracticable to delineate a circular target area, the method of indication shown in Fig. 4-29(b) may be used.

4.6.2 Datum Target Dimensions. The location and size, where applicable, of datum targets are defined with either basic or toleranced dimensions. If defined with basic dimensions, established tooling or

Copyright ASME International
Provided by IHS under license with ASME
No reproduction or networking permitted without license from IHS
Not for Resale

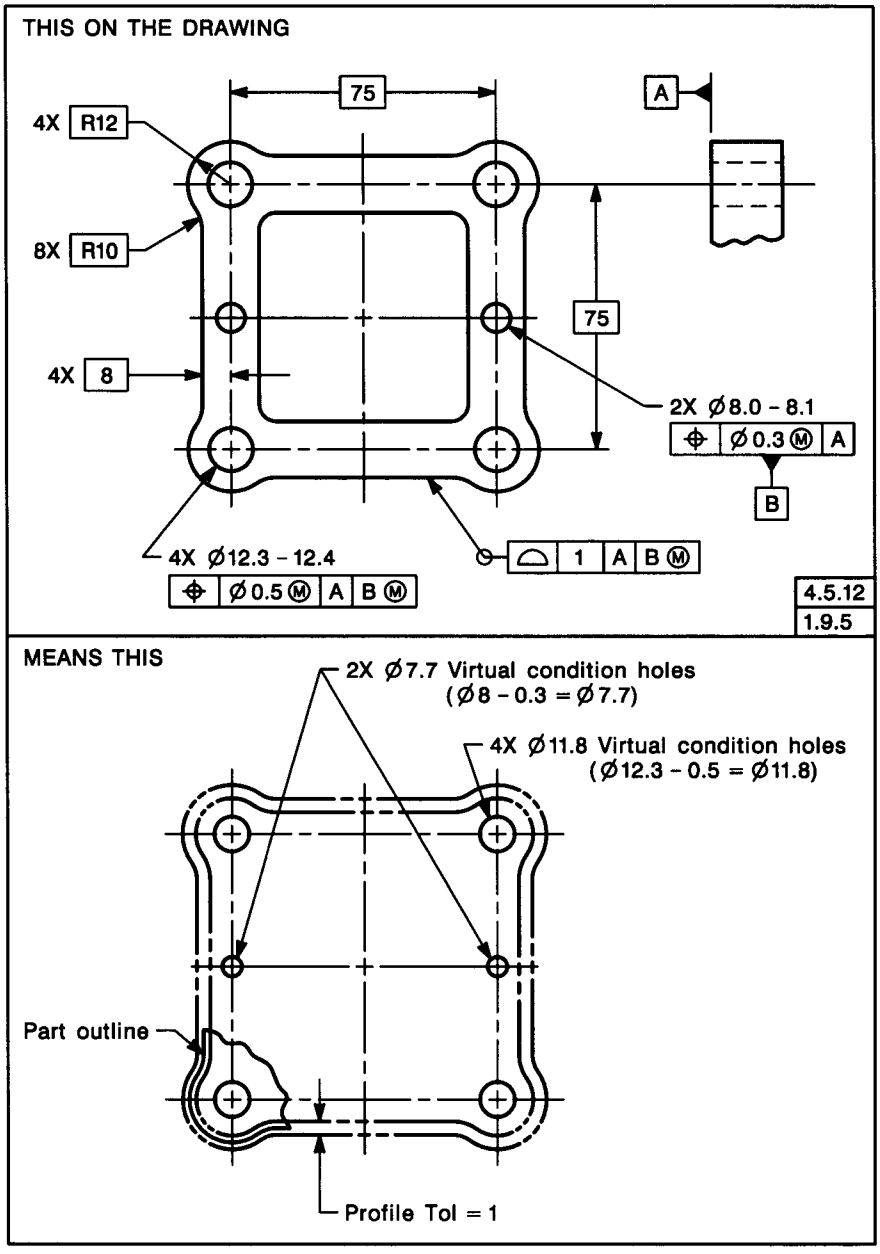

FIG. 4-26 SIMULTANEOUS POSITION AND PROFILE TOLERANCES

Copyright ASME International
Provided by IHS under license with ASME
No reproduction or networking permitted without license from IHS
Not for Resale

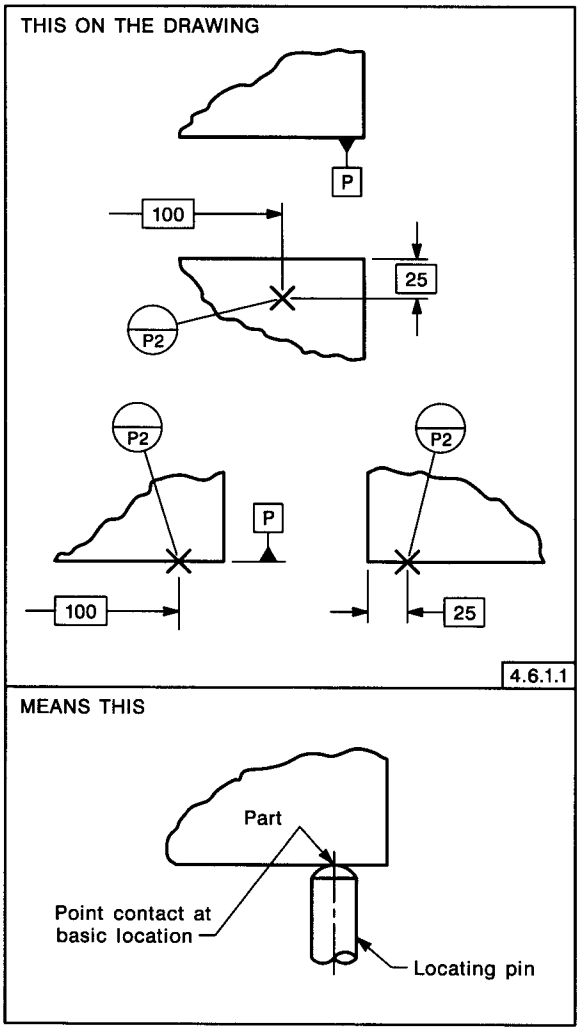

FIG. 4-27 DATUM TARGET POINT

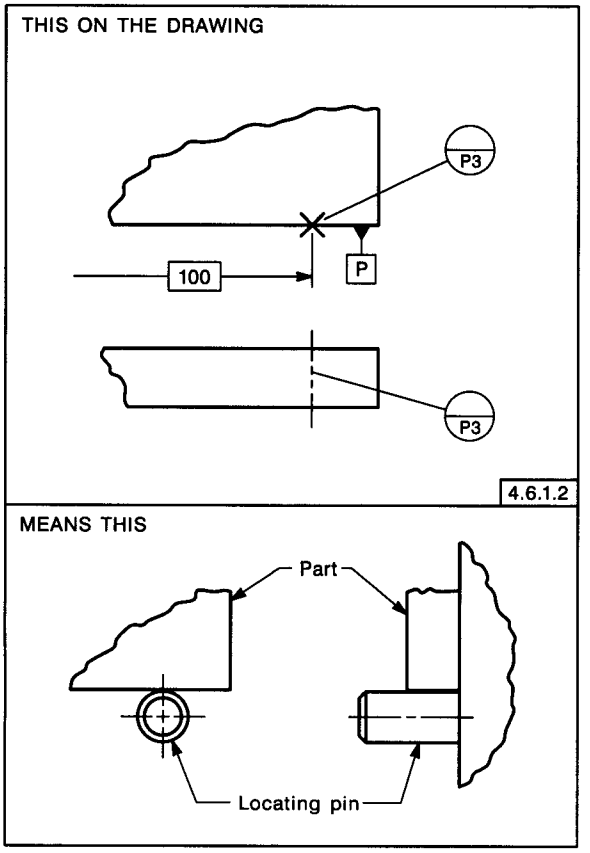

FIG. 4-28 DATUM TARGET LINE

Copyright ASME International
Provided by IHS under license with ASME
No reproduction or networking permitted without license from IHS
Not for Resale

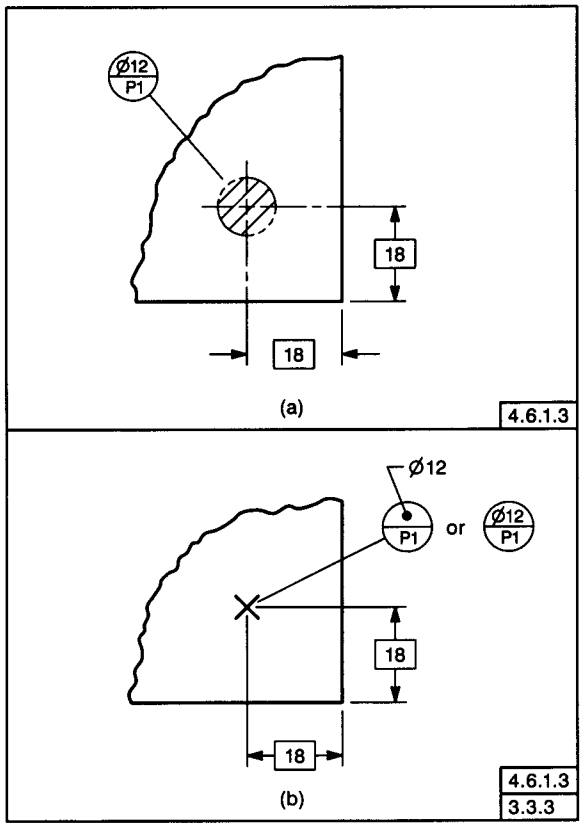

FIG. 4-29 DATUM TARGET AREA

gaging tolerances apply. Figure 4-30 illustrates a part where datum target points are located by means of basic dimensions. In this example, the three mutually perpendicular planes of the datum reference frame are established by three target points on the primary datum feature, two on the secondary, and one on the tertiary.

4.6.3 Datum Planes Established by Datum Targets. A primary datum plane is established by at least three target points or areas not on a straight line. See Fig. 4-31. A secondary datum plane is usually established by two targets. A tertiary datum plane is usually established by one target. A combination of target points, lines, and areas may be used. See Fig. 4-32. For irregular or step surfaces, the datum plane should contain at least one of the datum targets.

4.6.3.1 Stepped Surfaces. A datum plane may also be established by targets located on step surfaces, as in Fig. 4-33. The basic dimension defines the offset between the target points (the toleranced linear dimension in this example controls the distance between the surfaces). Profile tolerancing may be used on the offset surface in lieu of the toleranced dimension and dimension origin symbol. Curved or free-form surfaces may require datum planes completely offset from the datum targets. See Fig. 4-39.

4.6.4 Primary Datum Axis. Two sets of three equally spaced targets may be used to establish a datum axis for a primary datum feature (RFS). See Figs. 4-34 and 4-35. The two target sets are spaced as far apart as practicable and dimensioned from the secondary datum. The centering device used to establish the datum axis has two sets of three equally spaced contacting features capable of moving radially at an equal rate from a common axis. Where two cylindrical datum features are used to establish a datum axis, as in Fig. 4-35, each datum feature is identified with a different datum feature symbol. Each target set contains different datum identifying letters.

4.6.4.1 Circular and Cylindrical Targets. Circular target lines and cylindrical target areas may be used to establish a datum axis on rotating parts. See Fig. 4-36.

4.6.5 Secondary Datum Axis. For a secondary datum feature (RFS), a set of three equally spaced targets may be used to establish a datum axis. See Fig. 4-37. The centering device used to establish the datum axis has a set of three equally spaced contacting features capable of moving radially at an equal rate from a common axis that is perpendicular to the primary datum plane. In this example, the datum targets and the contacting features are oriented relative to a tertiary datum feature.

4.6.6 Equalizing Datums. Where a part configuration is such that rounded features on opposite ends are used to establish datums, pairs of datum target points or lines are indicated on these surfaces, as in Fig. 4-38. Equalizing pin locations are intended where target points are coordinately dimensioned. V-type equalizers are intended where target points are defined by angles shown tangent to the surface. Where target lines are defined by a dimension from another datum plane, as in Fig. 4-38 for lines B1 and B2, knife edge V-type equalizers are intended, whereas V-type planes may be indicated by only showing the lines in the top view. Equalizing datums may be applied to other suitable part configurations. It is permissible, in such a case, to use the datum feature symbol to identify the equalized theoretical planes of the datum reference frame. It should be noted however, that this is an exception, and is to be

Copyright ASME International
Provided by IHS under license with ASME
No reproduction or networking permitted without license from IHS
Not for Resale

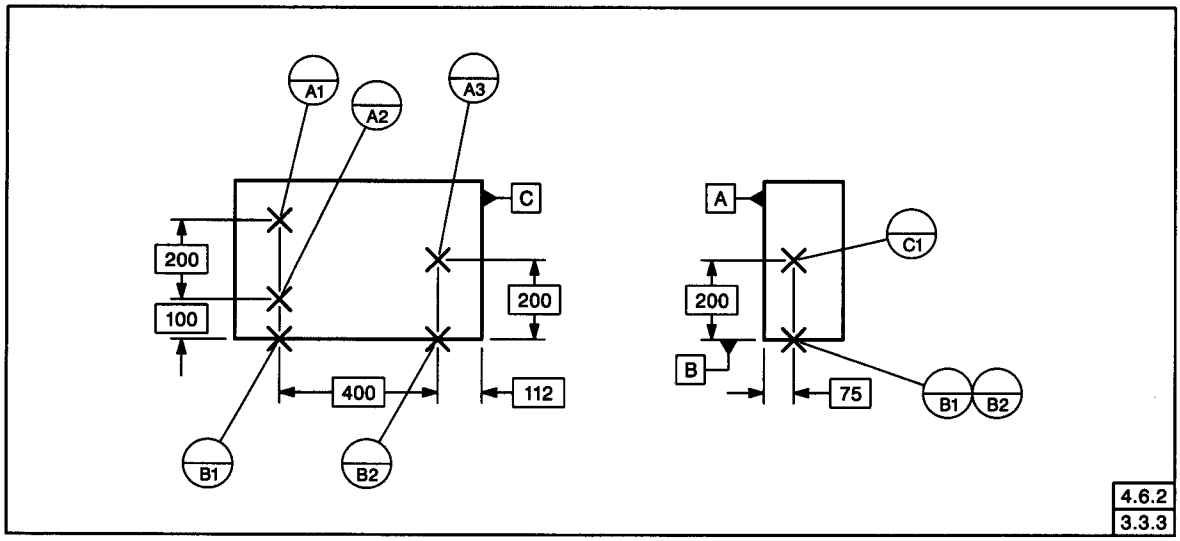

FIG. 4-30 DIMENSIONING DATUM TARGETS

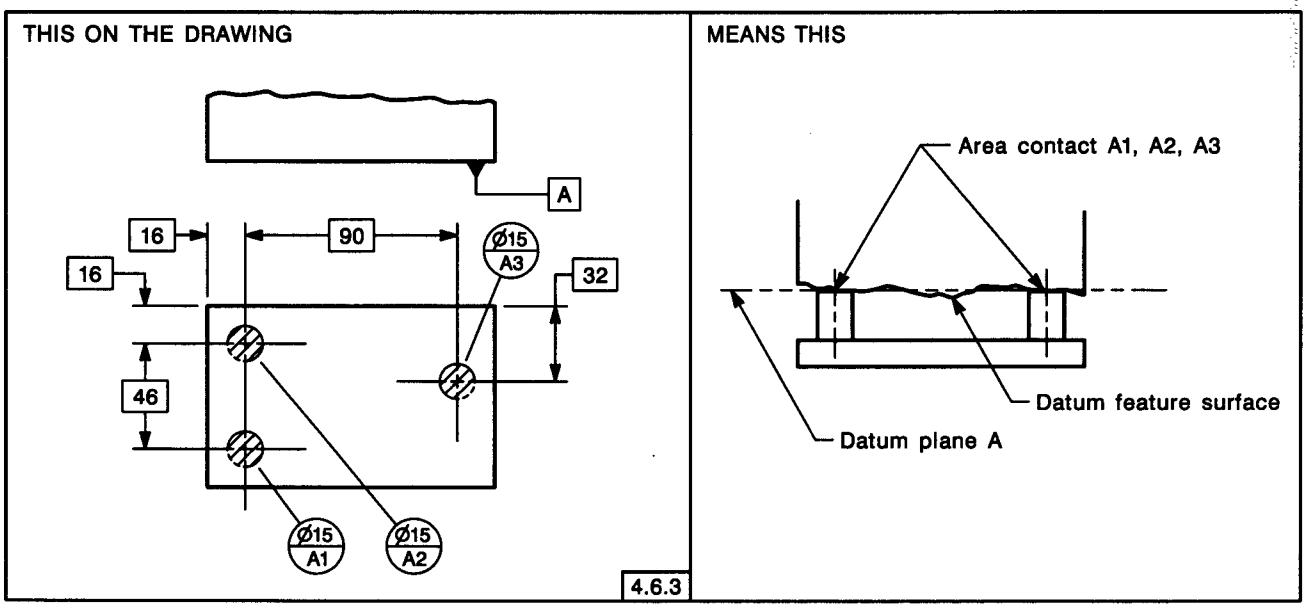

FIG. 4-31 PRIMARY DATUM PLANE ESTABLISHED BY THREE DATUM TARGET AREAS

Copyright ASME International
Provided by IHS under license with ASME
No reproduction or networking permitted without license from IHS
Not for Resale

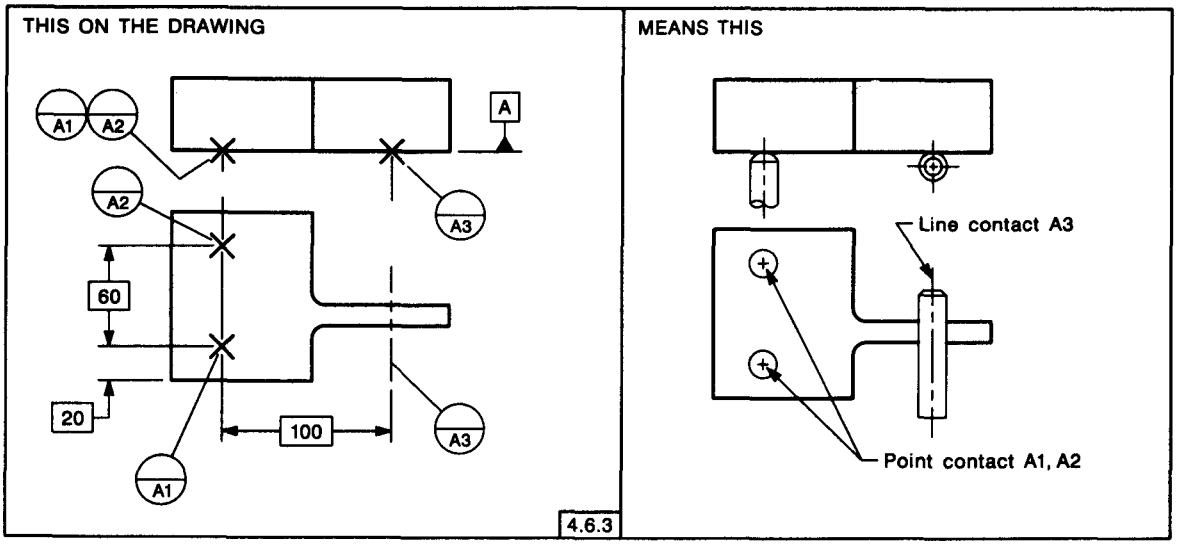

FIG. 4-32 PRIMARY DATUM PLANE ESTABLISHED BY TWO DATUM TARGET POINTS AND ONE DATUM TARGET LINE

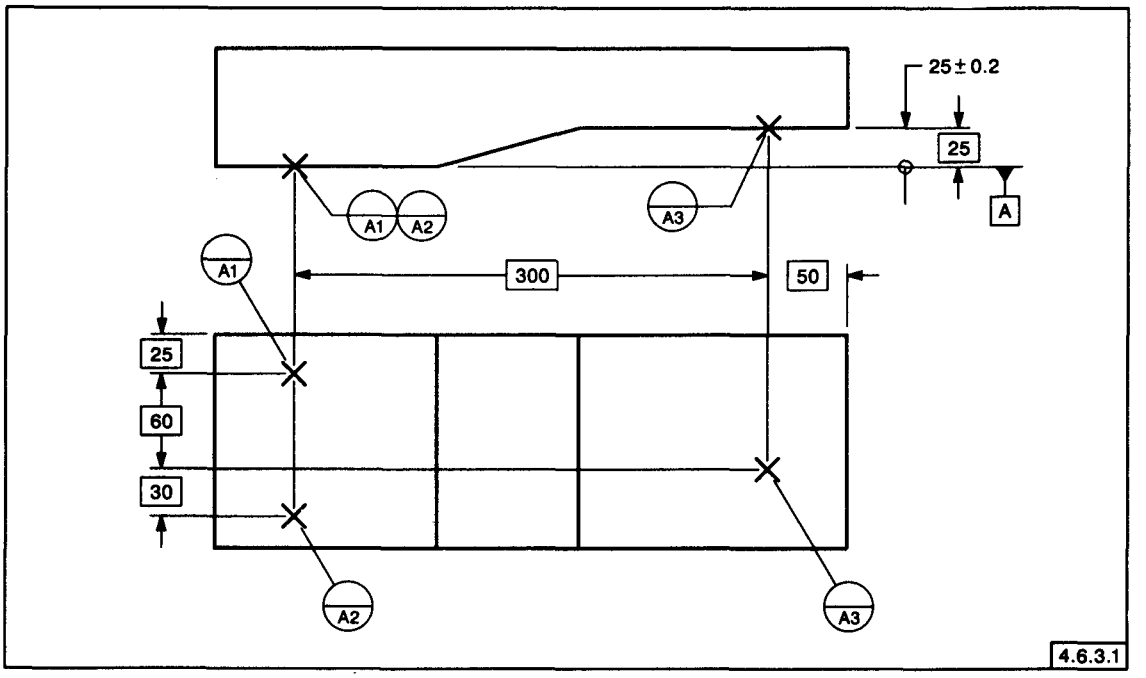

FIG. 4-33 STEP DATUM FEATURE

Copyright ASME International
Provided by IHS under license with ASME
No reproduction or networking permitted without license from IHS
Not for Resale

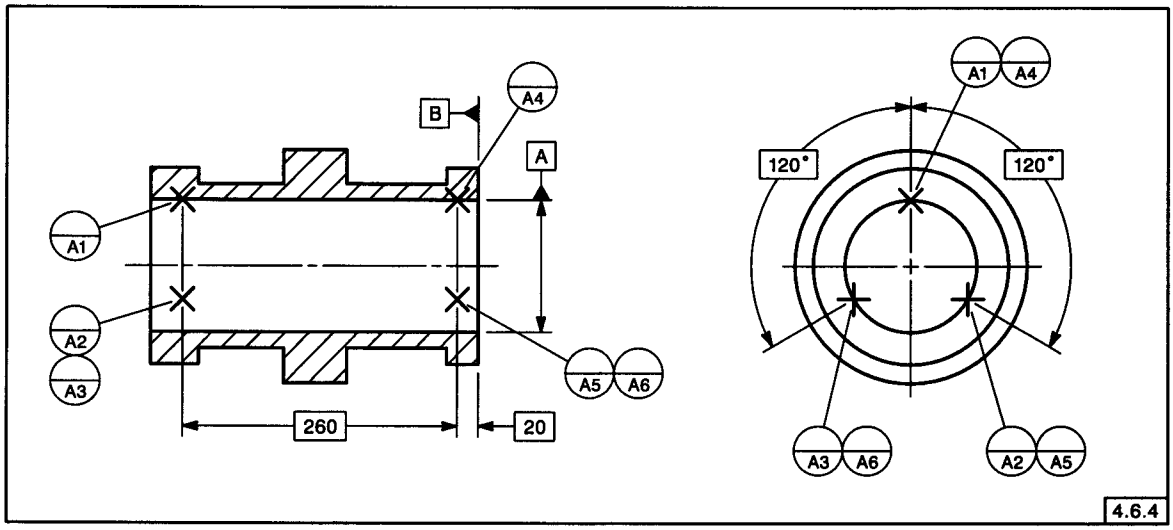

FIG. 4-34 PRIMARY DATUM AXIS ESTABLISHED BY DATUM TARGET POINTS ON A SINGLE CYLINDRICAL FEATURE

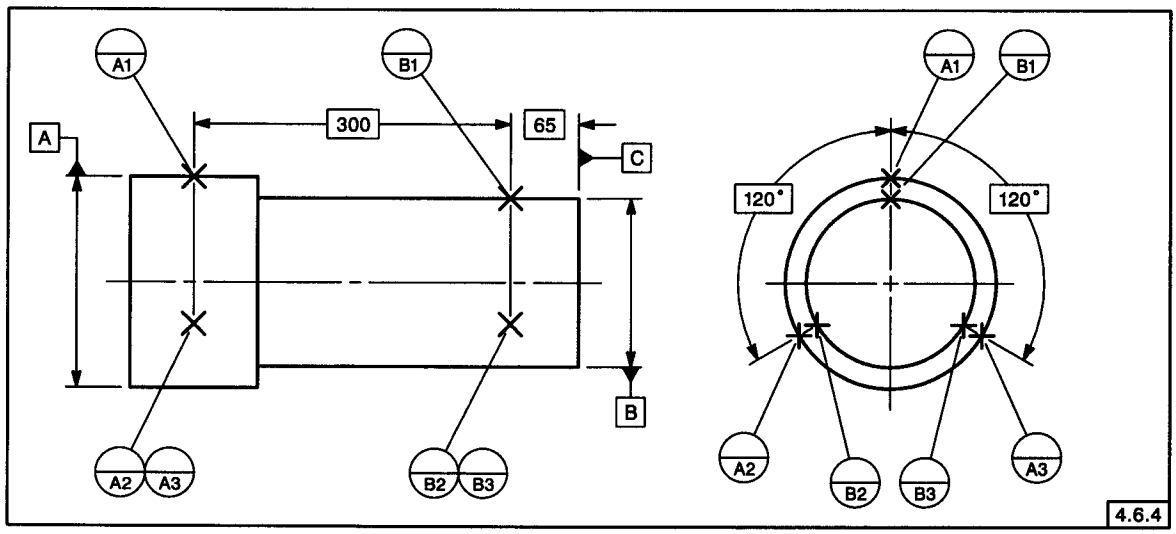

FIG. 4-35 PRIMARY DATUM AXIS ESTABLISHED BY DATUM TARGET POINTS ON TWO CYLINDRICAL FEATURES

Copyright ASME International
Provided by IHS under license with ASME
No reproduction or networking permitted without license from IHS
Not for Resale

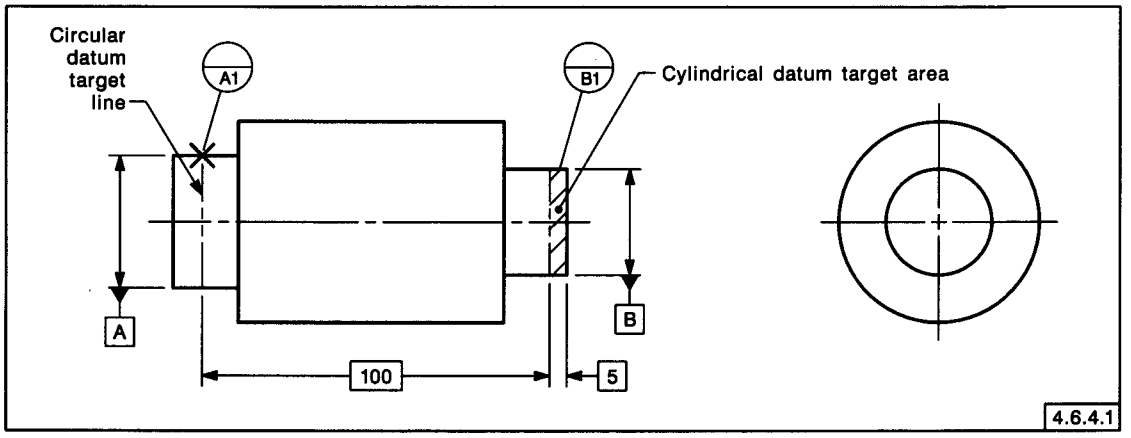

FIG. 4-36 DATUM TARGET LINES AND AREAS

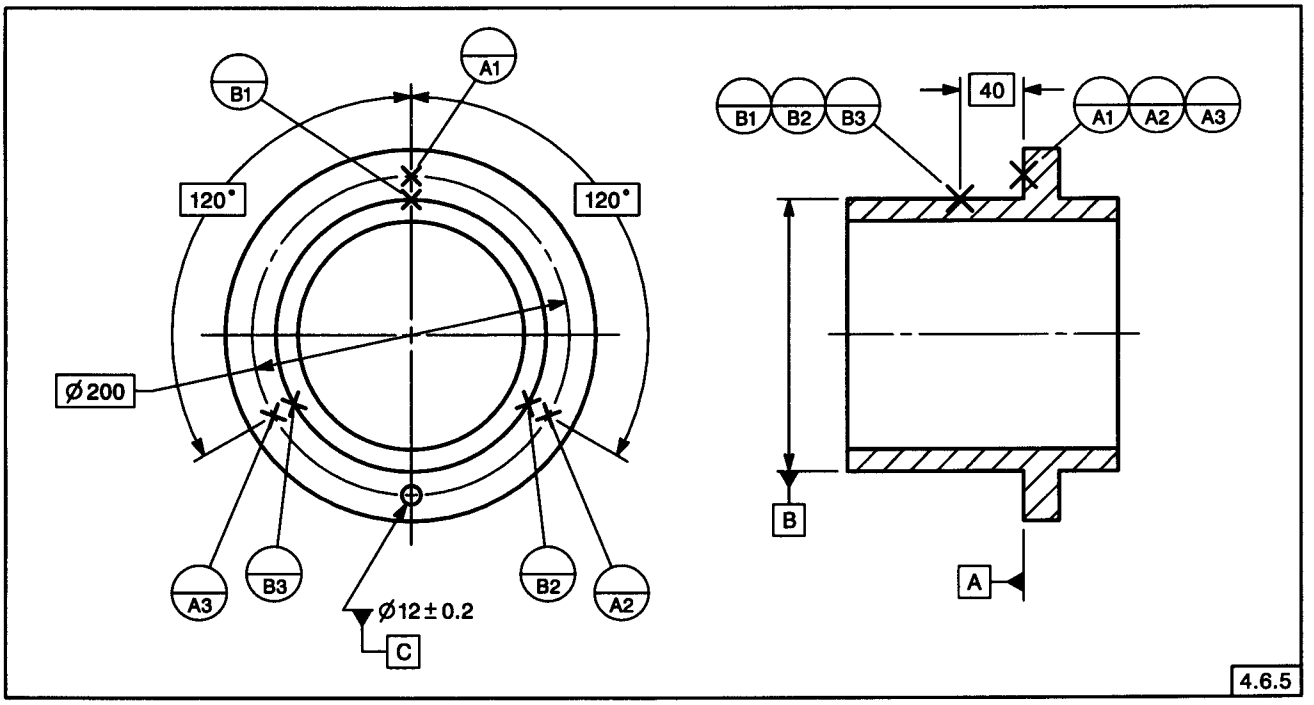

FIG. 4-37 SECONDARY DATUM AXIS

Copyright ASME International
Provided by IHS under license with ASME
No reproduction or networking permitted without license from IHS
Not for Resale

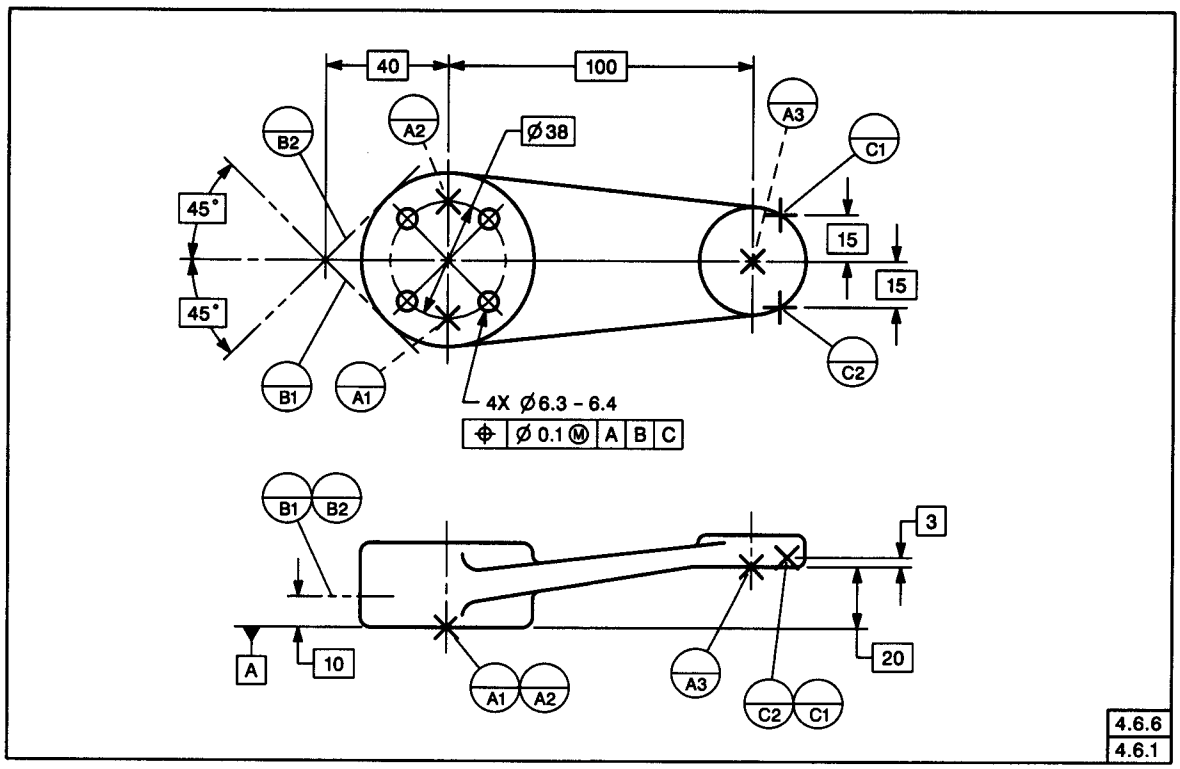

FIG. 4-38 APPLICATIONS OF EQUALIZING DATUMS

Copyright ASME International
Provided by IHS under license with ASME
No reproduction or networking permitted without license from IHS
Not for Resale

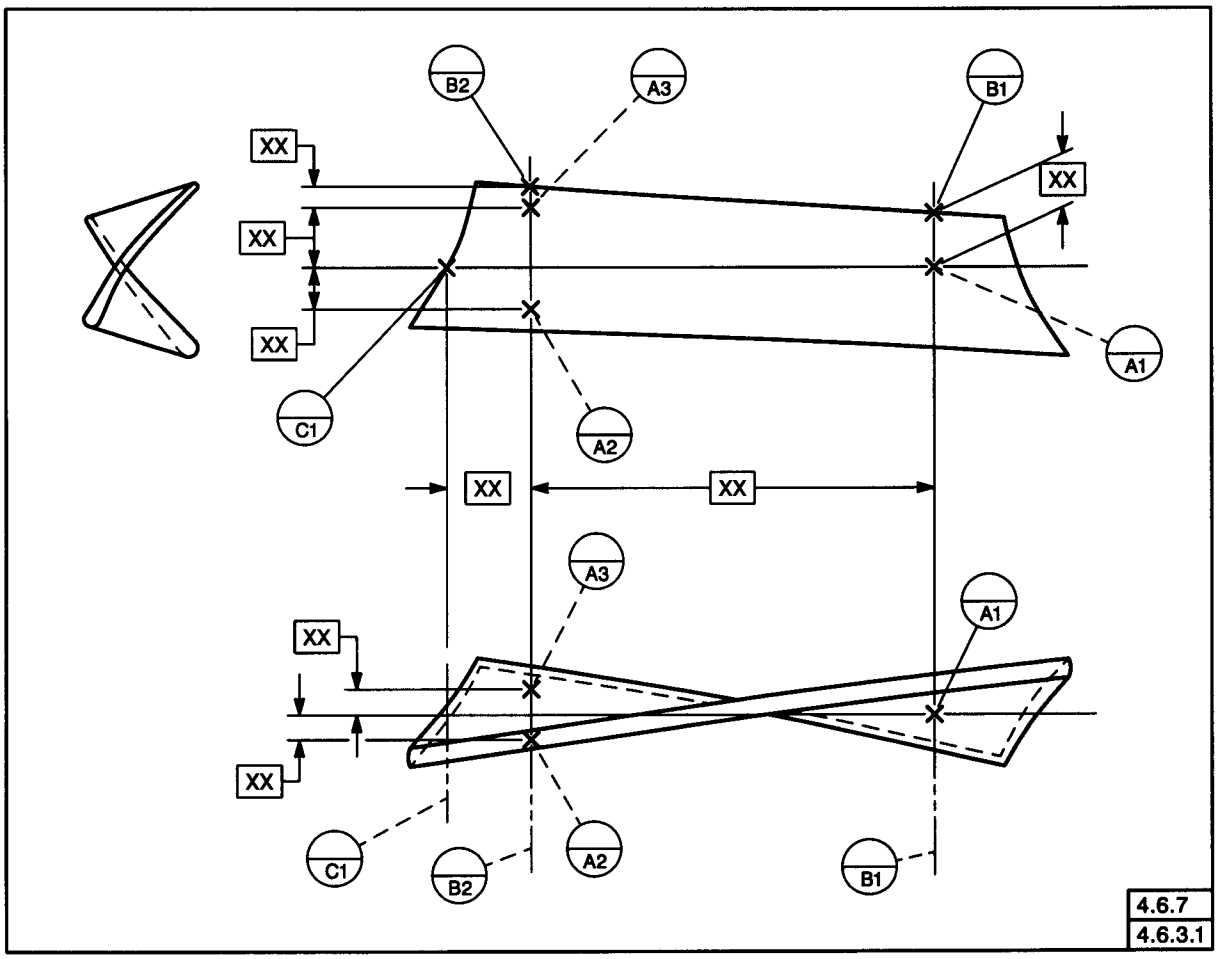

FIG. 4-39 DATUM TARGETS USED TO ESTABLISH DATUM REFERENCE FRAME FOR COMPLEX PART

done only when necessary and in conjunction with datum targets.

4.6.7 Datums Established From Complex or Irregular Surfaces. The datum feature symbol should be attached only to identifiable datum features. Where datums are established by targets on complex or irregular surfaces, the datum feature symbol is not required. See Fig. 4-39. In this example, although the datum targets establish a proper datum reference frame (A,B,C), no surface of the part can be identified as a datum feature. Where a datum reference frame has been properly established but its planes are unclear, the datum feature symbol may be applied to appropriate extension or center lines as needed.

Copyright ASME International
Provided by IHS under license with ASME
No reproduction or networking permitted without license from IHS Not for Resale

Copyright ASME International
Provided by IHS under license with ASME
No reproduction or networking permitted without license from IHS
Not for Resale

5 Tolerances of Location

5.1 GENERAL

This Section establishes the principles of tolerances of location. Included are position, concentricity, and symmetry used to control the following relationships:

(a) center distance between such features as holes, slots, bosses, and tabs;

(b) location of features [such as in (a) above] as a group, from datum features, such as plane and cylindrical surfaces;

(c) coaxiality of features;

(d) concentricity or symmetry of features — center distances of correspondingly-located feature elements equally disposed about a datum axis or plane.

5.2 POSITIONAL TOLERANCING

A *positional tolerance* defines:

(a) a zone within which the center, axis, or center plane of a feature of size is permitted to vary from a true (theoretically exact) position; or

(b) (where specified on an MMC or LMC basis) a boundary, defined as the *virtual condition,* located at the true (theoretically exact) position, that may not be violated by the surface or surfaces of the considered feature.

Basic dimensions establish the true position from specified datum features and between interrelated features. A positional tolerance is indicated by the position symbol, a tolerance value, applicable material condition modifiers, and appropriate datum references placed in a feature control frame.

5.2.1 Method. The following paragraphs describe methods used in expressing positional tolerances.

5.2.1.1 Basic Dimensions and General Tolerances. The location of each feature (hole, slot, stud, etc.) is given by basic dimensions. Many drawings are based on a schedule of general tolerances, usually provided near the drawing title block. Dimensions locating true position must be excluded from the general tolerance in one of the following ways:

(a) applying the basic dimension symbol to each of the basic dimensions [see Figs. 5-1(a) and (b)];

(b) specifying on the drawing (or in a document referenced on the drawing) the general note: UNTOLERANCED DIMENSIONS LOCATING TRUE POSITION ARE BASIC. See Fig. 5-1(c).

5.2.1.2 Use of Feature Control Frame. A feature control frame is added to the callout used to specify the size and number of features. See Figs. 5-2 through 5-4. These figures show different types of feature pattern dimensioning.

5.2.1.3 Identifying Features to Establish Datums. It is necessary to identify features on a part to establish datums for dimensions locating true positions. For example, in Fig. 5-2, if datum references had been omitted, it would not be clear whether the inside diameter or the outside diameter was the intended datum feature for the dimensions locating true positions. The intended datum features are identified with datum feature symbols, and the applicable datum references are included in the feature control frame. For information on specifying datums in an order of precedence, see para. 4.4.

5.2.2 Application to Base Line and Chain Dimensioning. True position dimensioning can be applied as base line dimensioning or as chain dimensioning. For positional tolerancing, unlike plus and minus tolerancing as shown in Fig. 2-4, basic dimensions are used to establish the true positions of features. Assuming identical positional tolerances are specified, the resultant tolerance between any two holes will be the same for chain dimensioning as for base line dimensioning. This also applies to angular dimensions, whether base line or chain type.

5.3 FUNDAMENTAL EXPLANATION OF POSITIONAL TOLERANCING

The following is a general explanation of positional tolerancing.

Copyright ASME International
Provided by IHS under license with ASME
No reproduction or networking permitted without license from IHS
Not for Resale

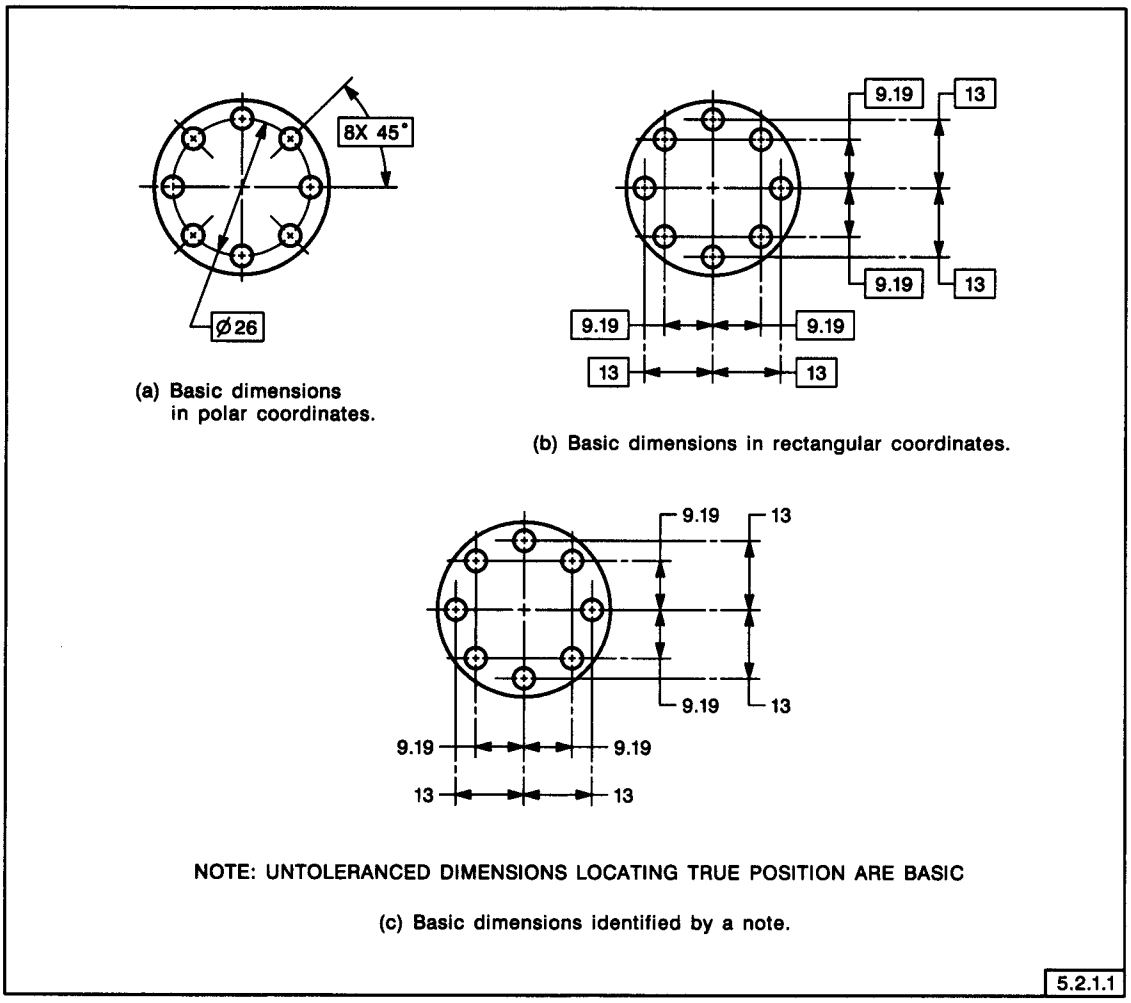

(a) Basic dimensions in polar coordinates.

(b) Basic dimensions in rectangular coordinates.

(c) Basic dimensions identified by a note.

FIG. 5-1 IDENTIFYING BASIC DIMENSIONS

Copyright ASME International
Provided by IHS under license with ASME
No reproduction or networking permitted without license from IHS
Not for Resale

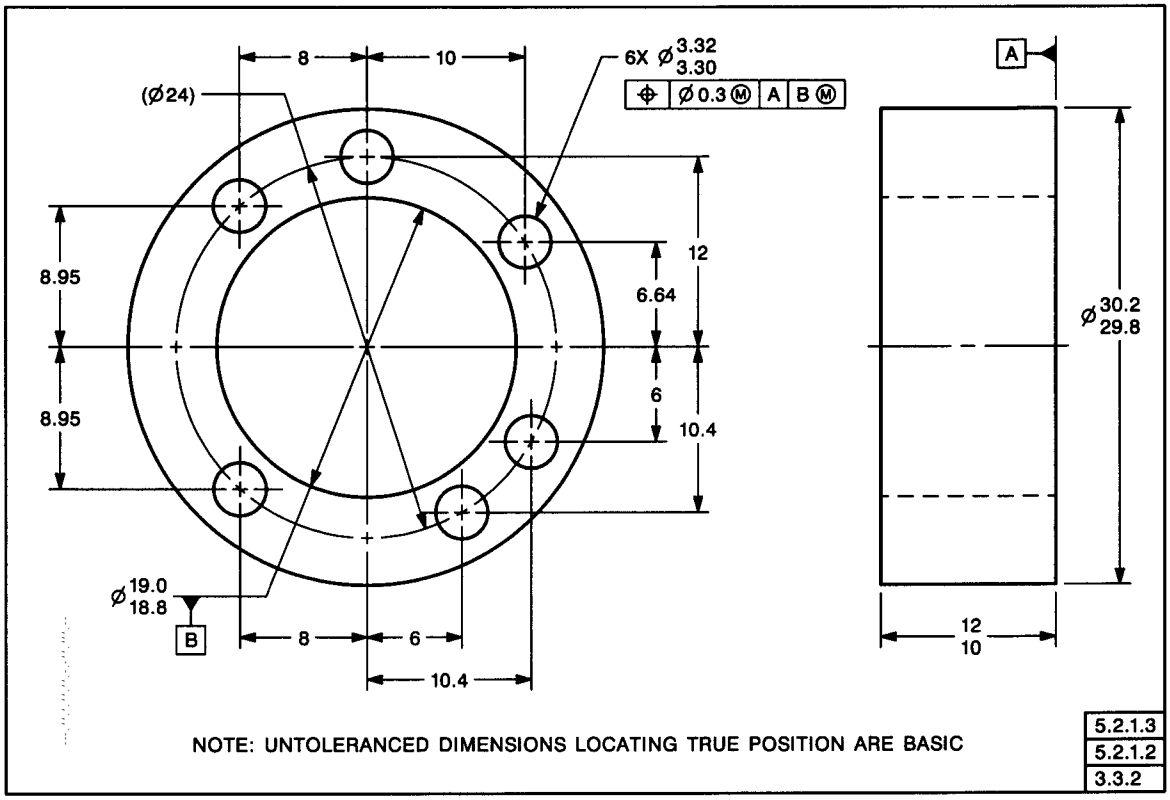

FIG. 5-2 POSITIONAL TOLERANCING WITH DATUM REFERENCES

Copyright ASME International
Provided by IHS under license with ASME
No reproduction or networking permitted without license from IHS Not for Resale

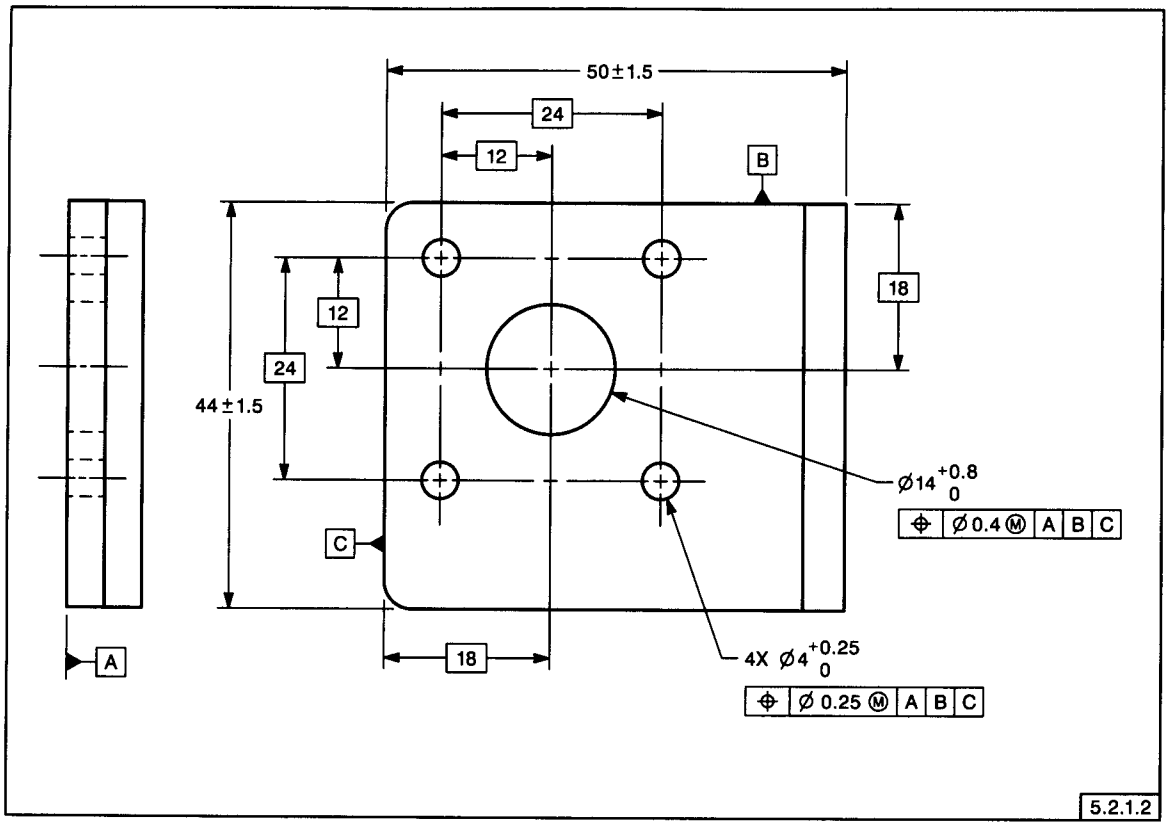

FIG. 5-3 POSITIONAL TOLERANCING RELATIVE TO PLANE DATUM FEATURE SURFACES

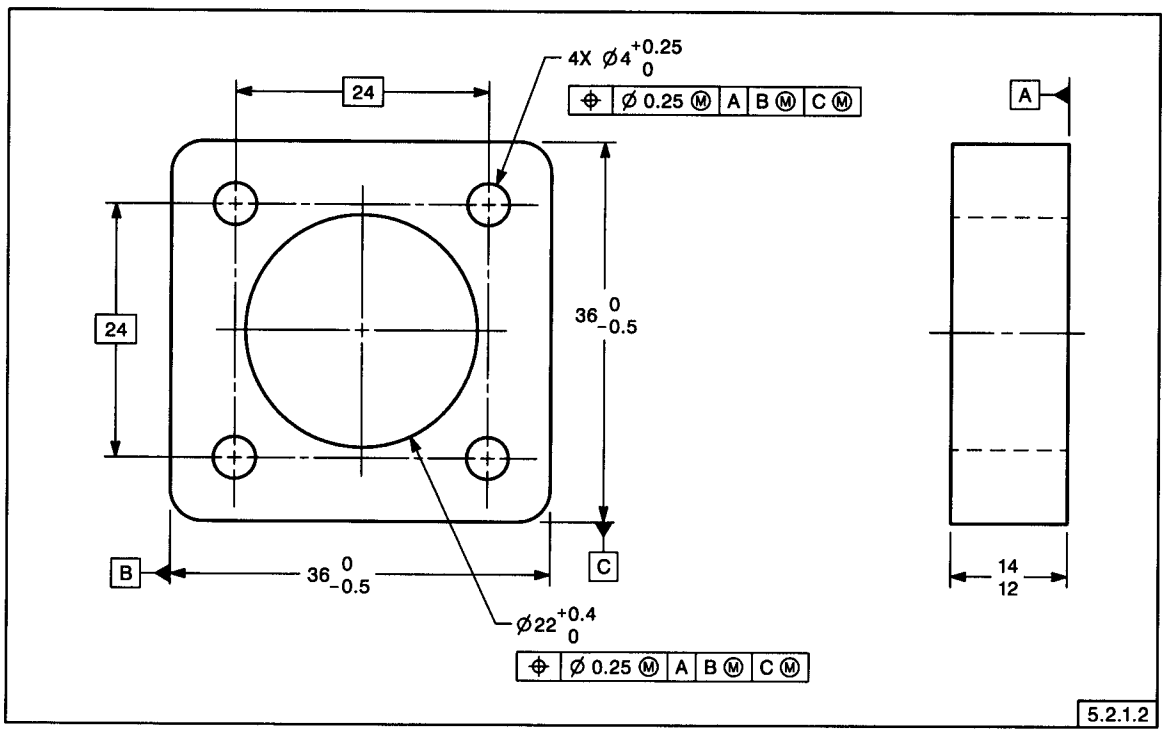

FIG. 5-4 POSITIONAL TOLERANCING AT MMC RELATIVE TO DATUM FEATURE CENTER PLANES

Copyright ASME International
Provided by IHS under license with ASME
No reproduction or networking permitted without license from IHS
Not for Resale

5.3.1 Material Condition Basis. Positional tolerancing is applied on an MMC, RFS, or LMC basis. When MMC or LMC is required, the appropriate modifier follows the specified tolerance and applicable datum reference in the feature control frame. See para. 2.8.

5.3.2 MMC as Related to Positional Tolerancing. The positional tolerance and maximum material condition of mating features are considered in relation to each other. MMC by itself means a feature of a finished product contains the maximum amount of material permitted by the toleranced size dimension for that feature. For holes, slots, and other internal features, maximum material is the condition where these features are at their minimum allowable sizes. For shafts, bosses, lugs, tabs, and other external features, maximum material is the condition where these features are at their maximum allowable sizes.

5.3.2.1 Explanation of Positional Tolerance at MMC. A positional tolerance applied at MMC may be explained in either of the following ways.

(a) In Terms of the Surface of a Hole. While maintaining the specified size limits of the hole, no element of the hole surface shall be inside a theoretical boundary located at true position. See Fig. 5-5.

(b) In Terms of the Axis of a Hole. Where a hole is at MMC (minimum diameter), its axis must fall within a cylindrical tolerance zone whose axis is located at true position. The diameter of this zone is equal to the positional tolerance. See Figs. 5-6(a) and (b). This tolerance zone also defines the limits of variation in the attitude of the axis of the hole in relation to the datum surface. See Fig. 5-6(c). It is only where the hole is at MMC that the specified tolerance zone applies. Where the actual mating size of the hole is larger than MMC, additional positional tolerance results. See Fig. 5-7. This increase of positional tolerance is equal to the difference between the specified maximum material condition limit of size (MMC) and the actual mating size of the hole. Where the actual mating size is larger than MMC, the specified positional tolerance for a hole may be exceeded and still satisfy function and interchangeability requirements.

NOTE: In certain cases of extreme form deviation (within limits of size) or orientation deviation of the hole, the tolerance in terms of the axis may not be exactly equivalent to the tolerance in terms of the surface. In such cases, the surface interpretation shall take precedence.

5.3.2.2 Displacement Allowed by Datum Features at MMC. In many instances, a group of features (such as a group of mounting holes) must be positioned relative to a datum feature at MMC. See Fig. 5-8. Where datum feature B is at MMC, its axis determines the location of the pattern of features as a group. Where datum feature B departs from MMC, its axis may be displaced relative to the location of the datum axis (datum B at MMC) in an amount equal to one-half the difference between its actual mating size and MMC size.

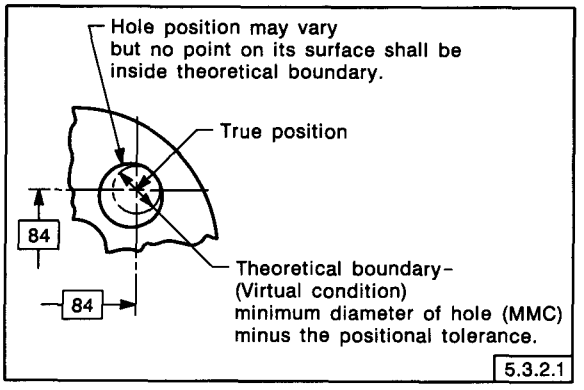

FIG. 5-5 BOUNDARY FOR SURFACE OF HOLE AT MMC

NOTE: If a functional gage is used to check the part, this shift of the axis of the datum feature is automatically accommodated. However, if open set-up inspection methods are used to check the location of the feature pattern relative to the axis of the datum feature's actual mating envelope, this must be taken into account.

Since the axis of the datum feature's actual mating envelope must serve as the origin of measurements for the pattern of features, the features are therefore viewed as if they, as a group, had been displaced relative to the axis of the datum feature's actual mating envelope. This relative shift of the pattern of features, as a group, with respect to the axis of the datum feature does not affect the positional tolerance of the features relative to one another within the pattern.

5.3.2.3 Calculating Positional Tolerance. Figure 5-9 shows a drawing for one of two identical plates to be assembled with four 14 mm maximum diameter fasteners. The 14.25 minimum diameter clearance holes are selected with a size tolerance as shown. Using conventional positional tolerancing, the required tolerance is found by the equation as given in para. B3 of Appendix B.

$$T = H - F$$

$$= 14.25 - 14$$

$$= 0.25 \text{ diameter}$$

Copyright ASME International
Provided by IHS under license with ASME
No reproduction or networking permitted without license from IHS
Not for Resale

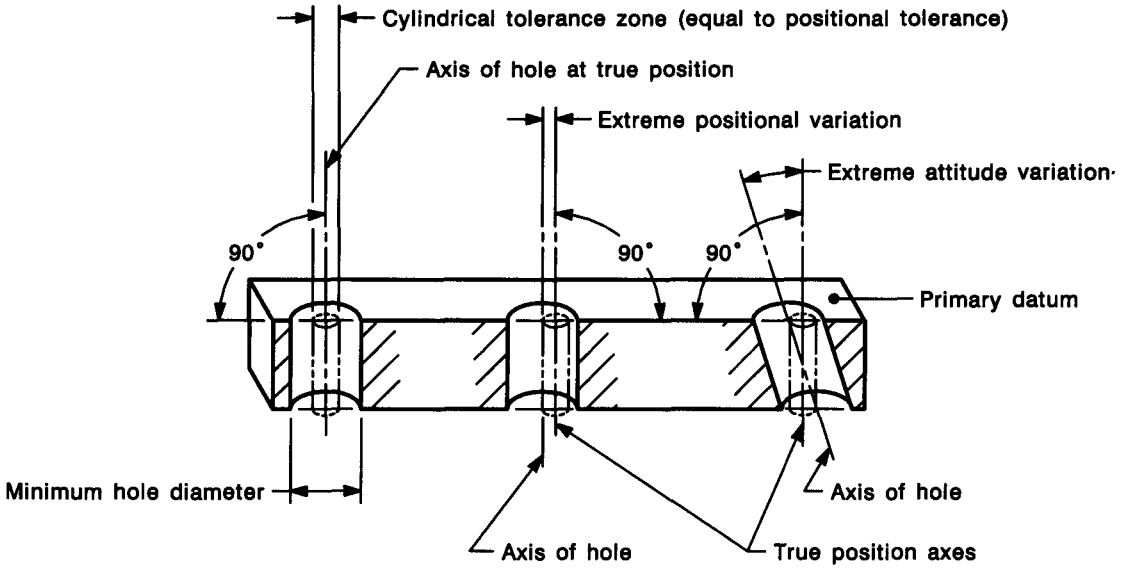

Note that the length of the tolerance zone is equal to the length of the feature, unless otherwise specified on the drawing.

6.2
5.3.2.1

FIG. 5-6 HOLE AXES IN RELATION TO POSITIONAL TOLERANCE ZONES

Copyright ASME International
Provided by IHS under license with ASME
No reproduction or networking permitted without license from IHS
Not for Resale

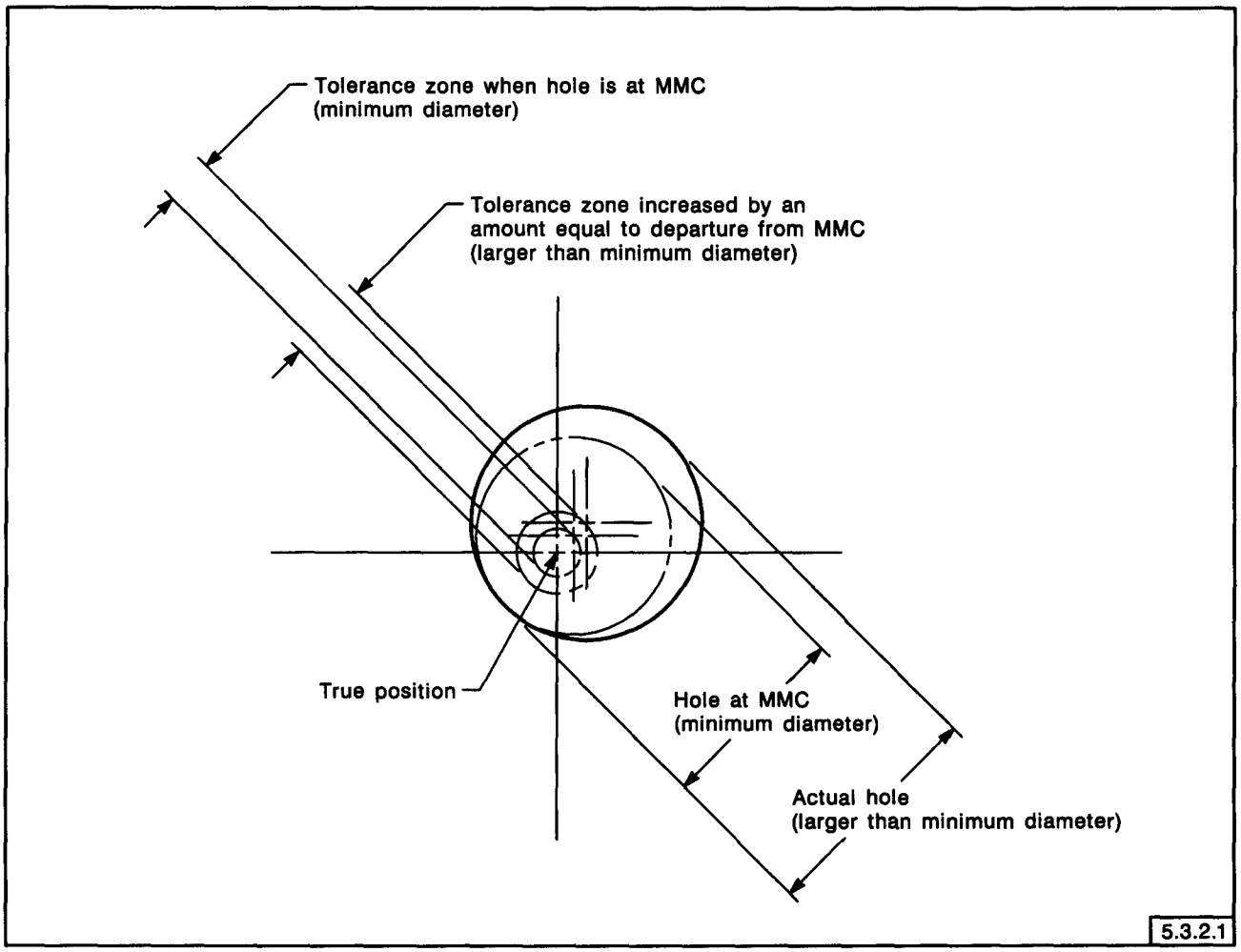

FIG. 5-7 INCREASE IN POSITIONAL TOLERANCE WHERE HOLE IS NOT AT MMC

Copyright ASME International
Provided by IHS under license with ASME
No reproduction or networking permitted without license from IHS
Not for Resale

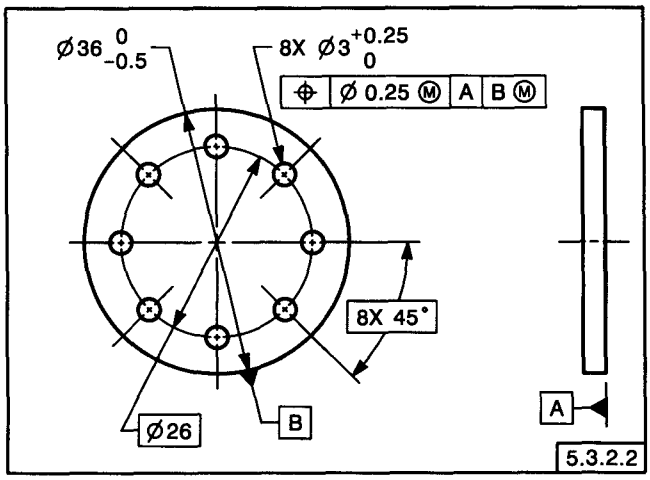

FIG. 5-8 DATUM FEATURE AT MMC

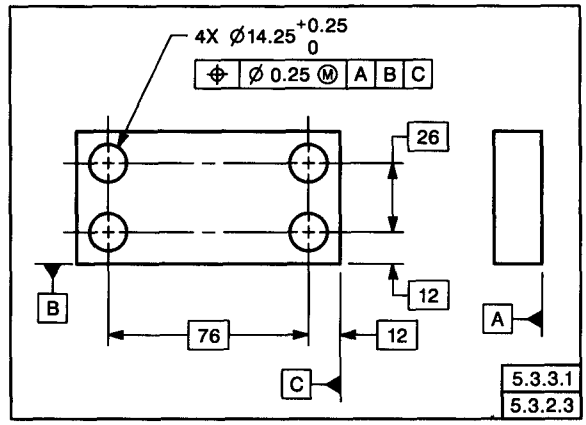

FIG. 5-9 CONVENTIONAL POSITIONAL TOLERANCING AT MMC

Note that if the clearance holes were located exactly at true position, the parts would still assemble with clearance holes as small as 14 diameter (or slightly larger). However, otherwise usable parts having clearance holes smaller than 14.25 diameter would be rejected for violating size limits.

5.3.3 Zero Positional Tolerance at MMC. In the preceding explanation, a positional tolerance of some magnitude is specified for the location of features. The application of MMC permits the tolerance to exceed the value specified, provided features are within size limits, and the feature locations are such as to make the part acceptable. However, rejection of usable parts can occur where these features are actually located on or close to their true positions, but produced to a size smaller than the specified minimum (outside of limits). The principle of positional tolerancing at MMC can be extended in applications where it is necessary to provide greater tolerance within functional limits than would otherwise be allowed. This is accomplished by adjusting the minimum size limit of a hole to the absolute minimum required for insertion of an applicable fastener located precisely at true position, and specifying a zero positional tolerance at MMC. In this case, the positional tolerance allowed is totally dependent on the actual mating size of the considered feature, as explained in para. 2.8.3.

5.3.3.1 Example of Zero Positional Tolerance at MMC. Figure 5-10 shows a drawing of the same part with a zero positional tolerance at MMC specified. Note that the maximum size limit of the clearance holes remains the same but the minimum was adjusted to correspond with a 14 mm diameter fastener. This results in an increase in the size tolerance for the clearance holes, the increase being equal to the conventional positional tolerance specified in Fig. 5-9. Although the positional tolerance specified in Fig. 5-10 is zero at MMC, the positional tolerance allowed is in direct proportion to the actual clearance hole size as shown by the following tabulation:

Clearance Hole Diameter (Feature Actual Mating Size)	Positional Tolerance Diameter Allowed
14	0
14.1	0.1
14.2	0.2
14.25	0.25
14.3	0.3
14.4	0.4
14.5	0.5

5.3.4 RFS as Related to Positional Tolerancing. In certain cases, the design or function of a part may require the positional tolerance, datum reference, or both, to be maintained regardless of feature actual mating sizes. RFS, where applied to the positional tolerance of circular features, requires the axis of each feature to be located within the specified positional tolerance regardless of the size of the feature. This requirement imposes a closer control of the features involved and introduces complexities in verification.

5.3.4.1 RFS Applied to a Pattern of Holes. In Fig. 5-11, the six holes may vary in size from 25 to 25.6 diameter. Each hole must be located within the specified positional tolerance regardless of the size of that hole. A hole at LMC (25.6 diameter) is

Copyright ASME International
Provided by IHS under license with ASME
No reproduction or networking permitted without license from IHS
Not for Resale

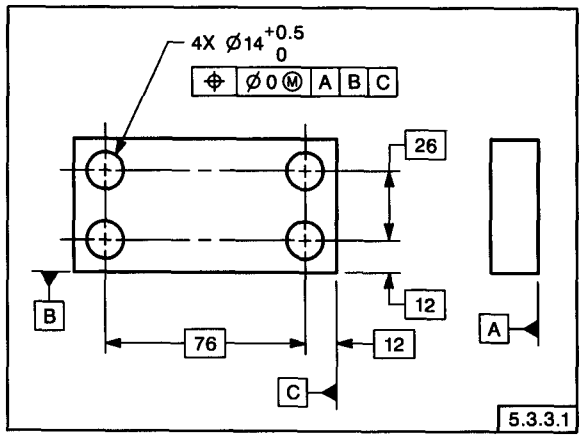

FIG. 5-10 ZERO POSITIONAL TOLERANCING AT MMC

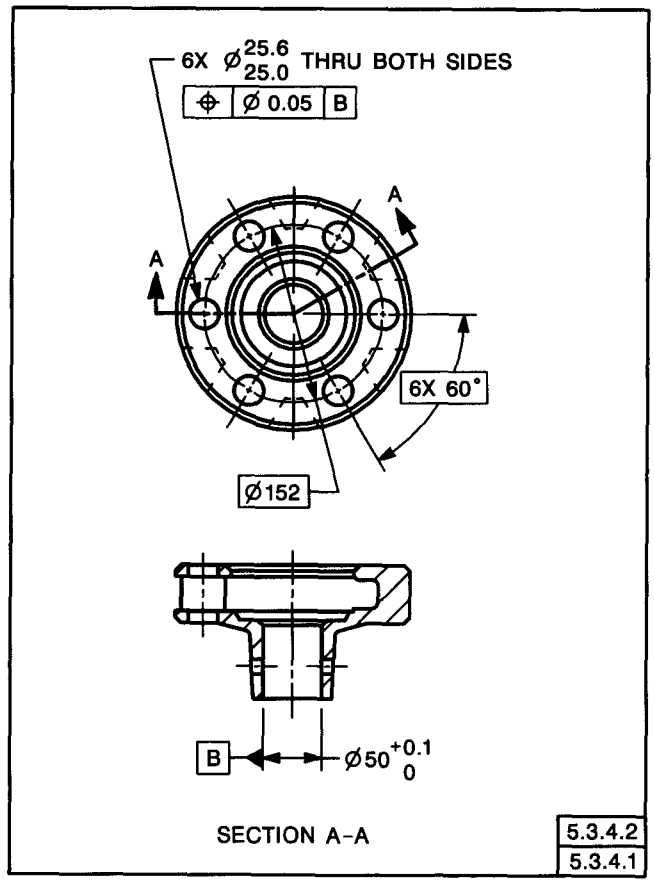

FIG. 5-11 RFS APPLIED TO A FEATURE AND DATUM

as accurately located as a hole at MMC (25 diameter). This positional control is more restrictive than the MMC principle.

5.3.4.2 Datum Features at RFS. The functional requirements of some designs may require that RFS be applied to a datum feature. That is, it may be necessary to require the axis of an actual datum feature (such as datum diameter B in Fig. 5-11) to be the datum axis for the holes in the pattern regardless of the datum feature's size. The RFS application does not permit any shift between the axis of the datum feature and the pattern of features, as a group, where the datum feature departs from MMC.

5.3.5 LMC as Related to Positional Tolerancing. Where positional tolerancing at LMC is specified, the stated positional tolerance applies where the feature contains the least amount of material permitted by its toleranced size dimension. Specification of LMC requires perfect form at LMC. Perfect form at MMC is not required. Where the feature departs from its LMC limit of size, an increase in positional tolerance is allowed, equal to the amount of such departure. See Fig. 5-12. LMC may be specified in positional tolerancing applications where MMC does not provide the desired control and RFS is too restrictive. See Figs. 5-13 through 5-15. LMC is used to maintain a desired relationship between the surface of a feature and its true position at tolerance extremes. Considerations critical to the design are usually involved.

5.3.5.1 LMC to Protect Wall Thickness. Figure 5-13 illustrates a boss and hole combination located by basic dimensions. Wall thickness is minimum where the boss and hole are at their LMC sizes and both features are displaced in opposite extremes. Since positional tolerances are specified on an LMC basis, as each feature departs from LMC, the wall thickness increases. This permits a corresponding increase in the positional tolerance, thus maintaining the desired minimum material thickness between these surfaces.

5.3.5.2 LMC Applied to a Radial Pattern of Slots. In Fig. 5-14, a radial pattern of slots is located relative to an end face and a center hole. LMC is specified to maintain the desired relationship between the side surfaces of the slots and the true position, where rotational alignment with the mating part may be critical.

5.3.5.3 LMC Applied to Single Features. LMC may also be applied to single features, such as the hole shown in Fig. 5-15. In this example, the position of the hole relative to the inside web is critical. RFS can be specified. However, LMC is applied, permitting an increase in the positional tolerance in specifying the design considerations.

Copyright ASME International
Provided by IHS under license with ASME
No reproduction or networking permitted without license from IHS
Not for Resale

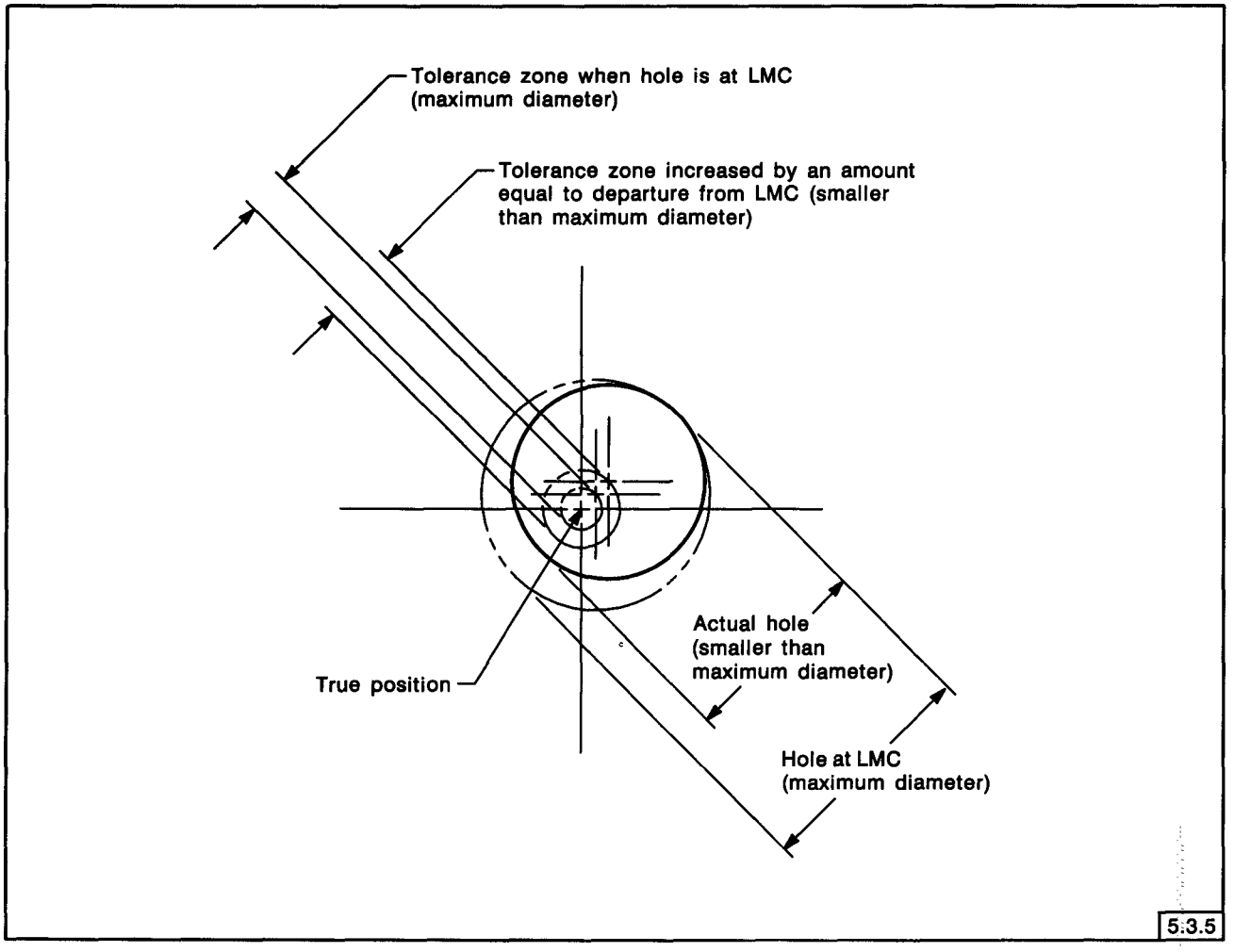

FIG. 5-12 INCREASE IN POSITIONAL TOLERANCE WHERE HOLE IS NOT AT LMC

Copyright ASME International
Provided by IHS under license with ASME
No reproduction or networking permitted without license from IHS
Not for Resale

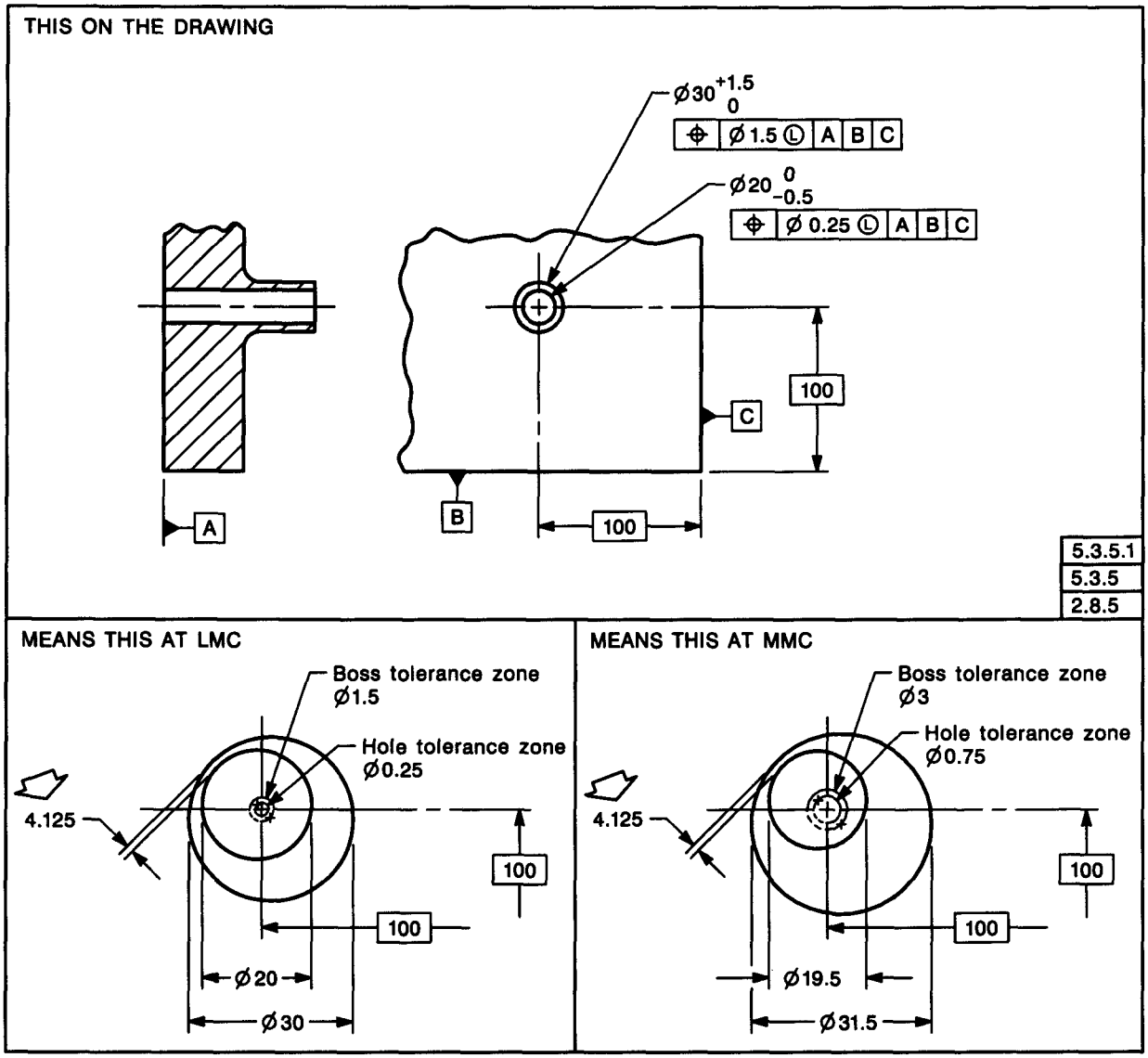

FIG. 5-13 LMC APPLIED TO BOSS AND HOLE

Copyright ASME International
Provided by IHS under license with ASME
No reproduction or networking permitted without license from IHS
Not for Resale

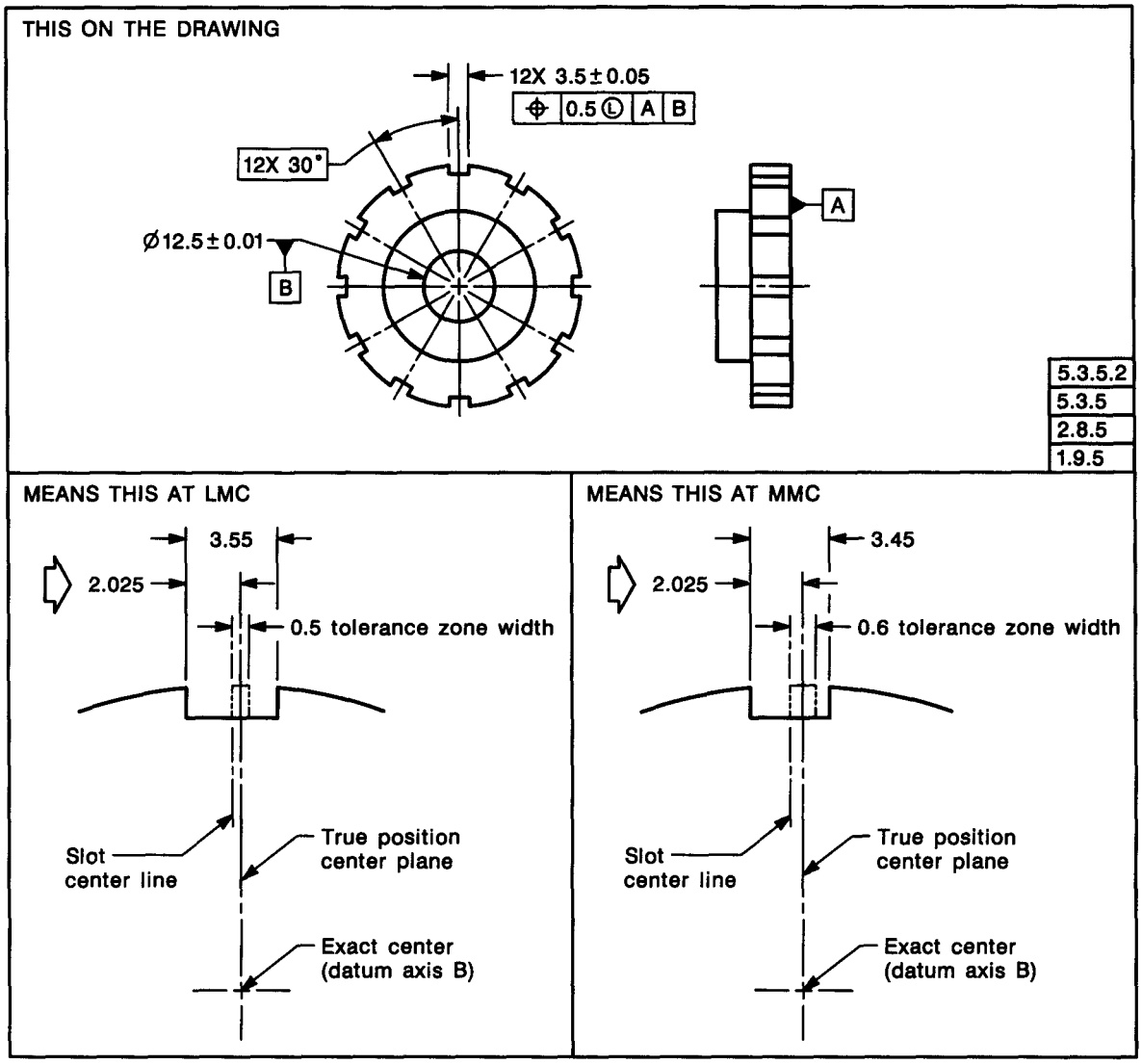

FIG. 5-14 LMC APPLIED TO PATTERN OF SLOTS

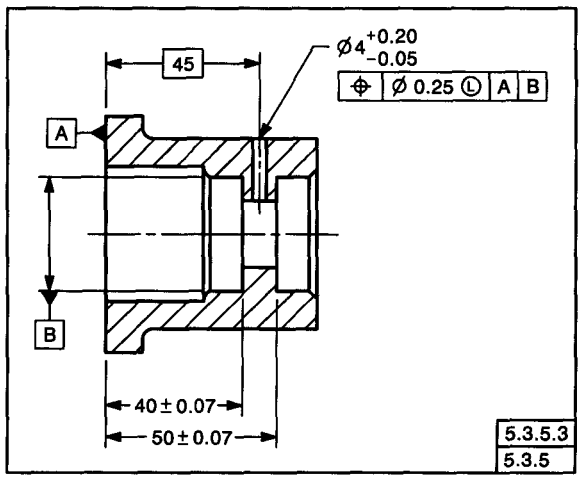

FIG. 5-15 LMC APPLIED TO A SINGLE FEATURE

5.3.6 Multiple Patterns of Features Located by Basic Dimensions Relative to Common Datums. Where two or more patterns of features are located by basic dimensions relative to common datum features referenced in the same order of precedence, and at the same material conditions, the following apply.

5.3.6.1 Simultaneous Requirement — RFS. Where multiple patterns of features are located relative to common datum features not subject to size tolerances, or to common datum features of size specified on an RFS basis, they are considered to be a single pattern. For example, in Fig. 5-16 each pattern of features is located relative to common datum features not subject to size tolerances. Since all locating dimensions are basic and all measurements are

Copyright ASME International
Provided by IHS under license with ASME
No reproduction or networking permitted without license from IHS
Not for Resale

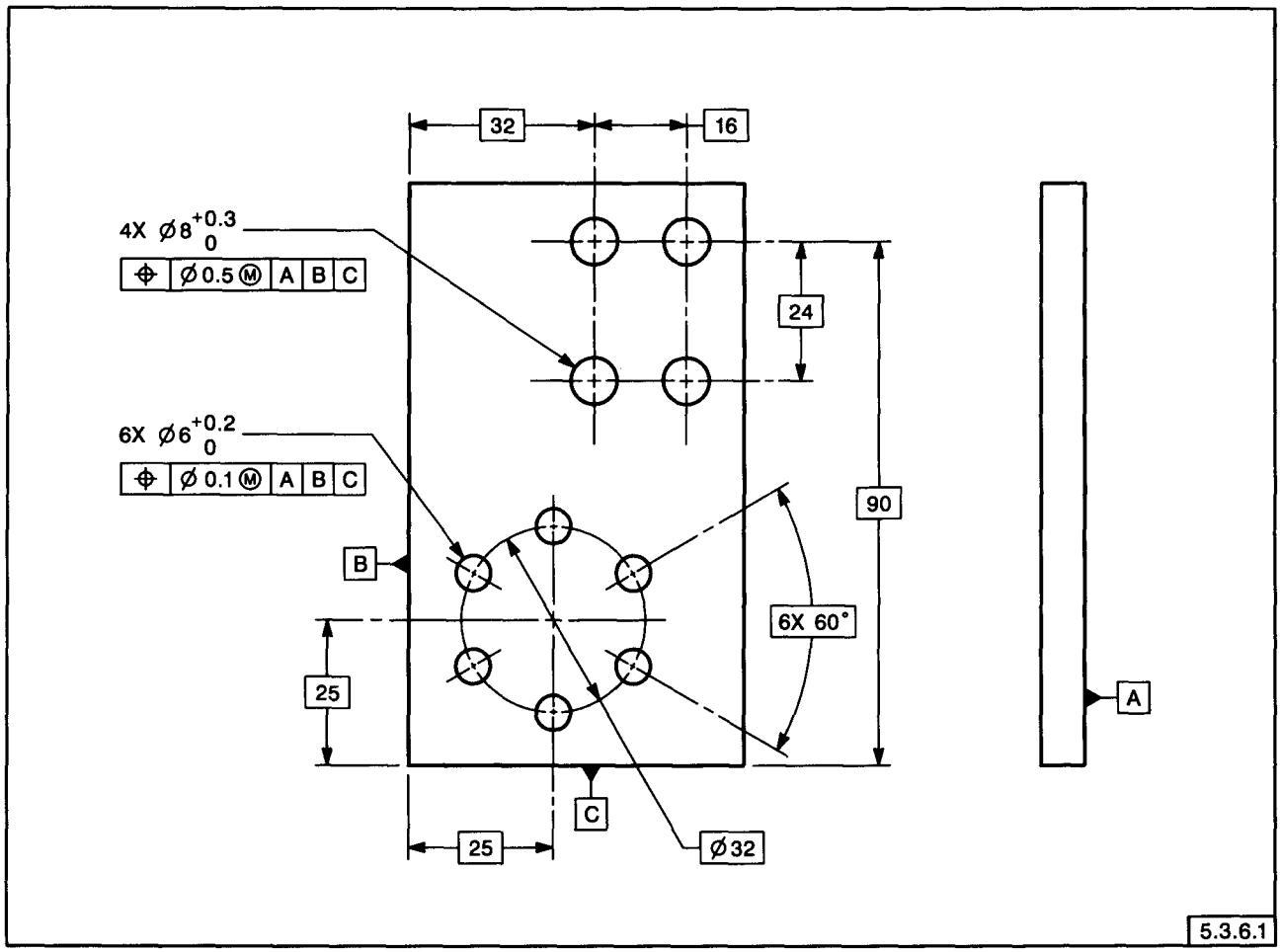

FIG. 5-16 MULTIPLE PATTERNS OF FEATURES

from a common datum reference frame, verification of positional tolerance requirements for the part can be collectively accomplished in a single setup or gage as illustrated by Fig. 5-17. The actual centers of all holes must lie on or within their respective tolerance zones when measured from datums A, B, and C.

NOTE: The explanation given in Fig. 5-17 still applies where independent verification of pattern locations becomes necessary due to size or complexity of the part.

5.3.6.2 Simultaneous Requirement — MMC. Where any of the common datums in multiple patterns of features is specified on an MMC basis, there is an option whether the patterns are to be considered as a single pattern or as having separate requirements. If no note is added under the feature control frames, the patterns are to be treated as a single pattern. Where it is desired to permit the patterns to be treated as separate patterns, a notation such as SEP REQT is placed beneath each feature control frame. See Fig. 5-18. This allows the datum features of size to establish a separate datum reference frame for each pattern of features, as a group. These datum reference frames may shift independently of each other, resulting in an independent relationship between the patterns. This principle does not apply to the lower segments of composite feature control frames except as noted in para. 4.5.12.1.

5.4 FEATURE PATTERN LOCATION

Where design requirements permit a *Feature-Relating Tolerance Zone Framework (FRTZF)* to be located and oriented within limits imposed upon it by a *Pattern-Locating Tolerance Zone Framework (PLTZF),* composite positional tolerancing is used. (The acronyms are pronounced "Fritz" and "Plahtz.")

5.4.1 Composite Positional Tolerancing. This provides a composite application of positional tolerancing for the location of feature patterns as well as the interrelation (position and orientation) of features within these patterns. Requirements are annotated by

Copyright ASME International
Provided by IHS under license with ASME
No reproduction or networking permitted without license from IHS
Not for Resale

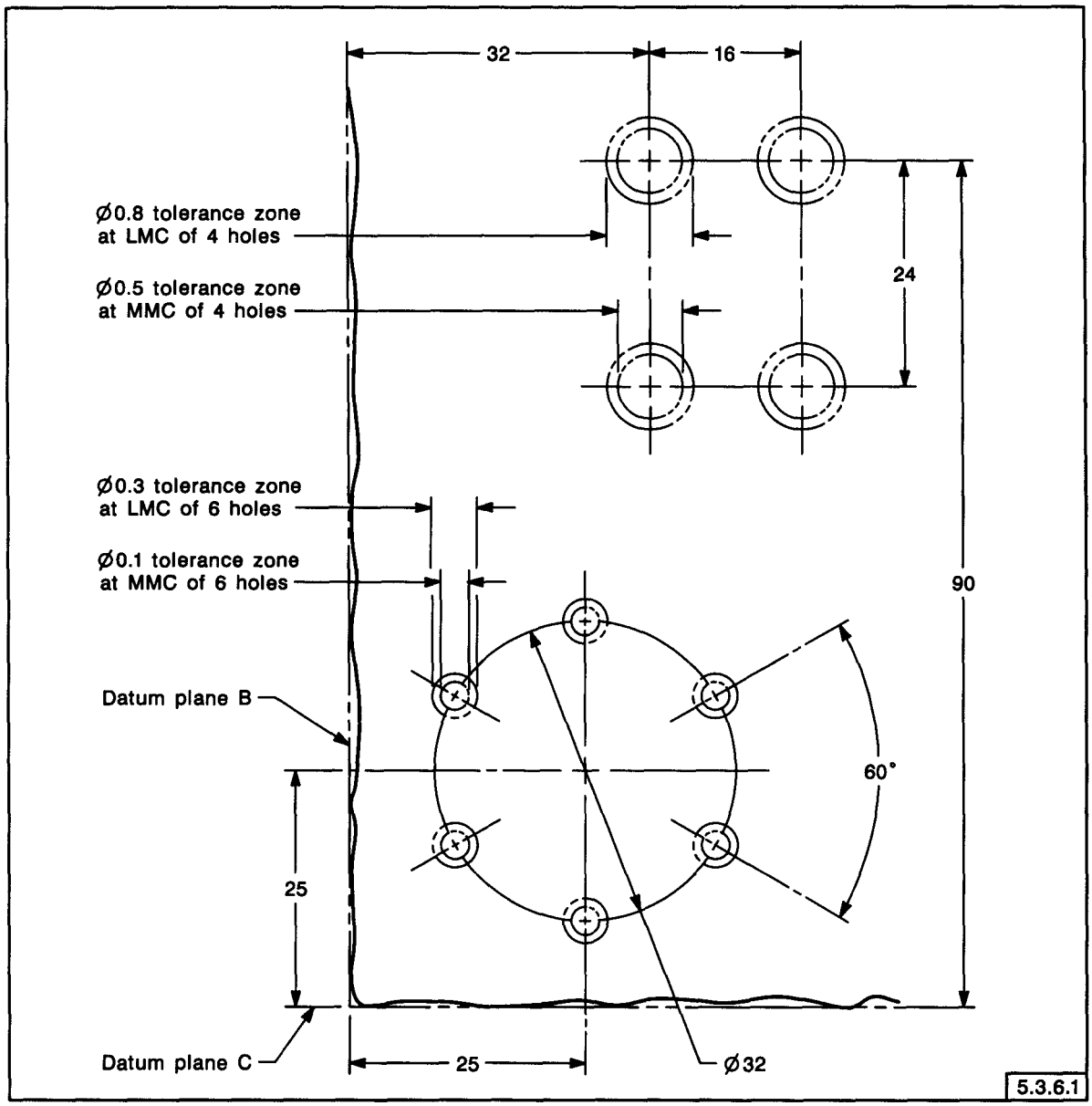

FIG. 5-17 TOLERANCE ZONES FOR PATTERNS SHOWN IN FIG. 5-16

Copyright ASME International
Provided by IHS under license with ASME
No reproduction or networking permitted without license from IHS
Not for Resale

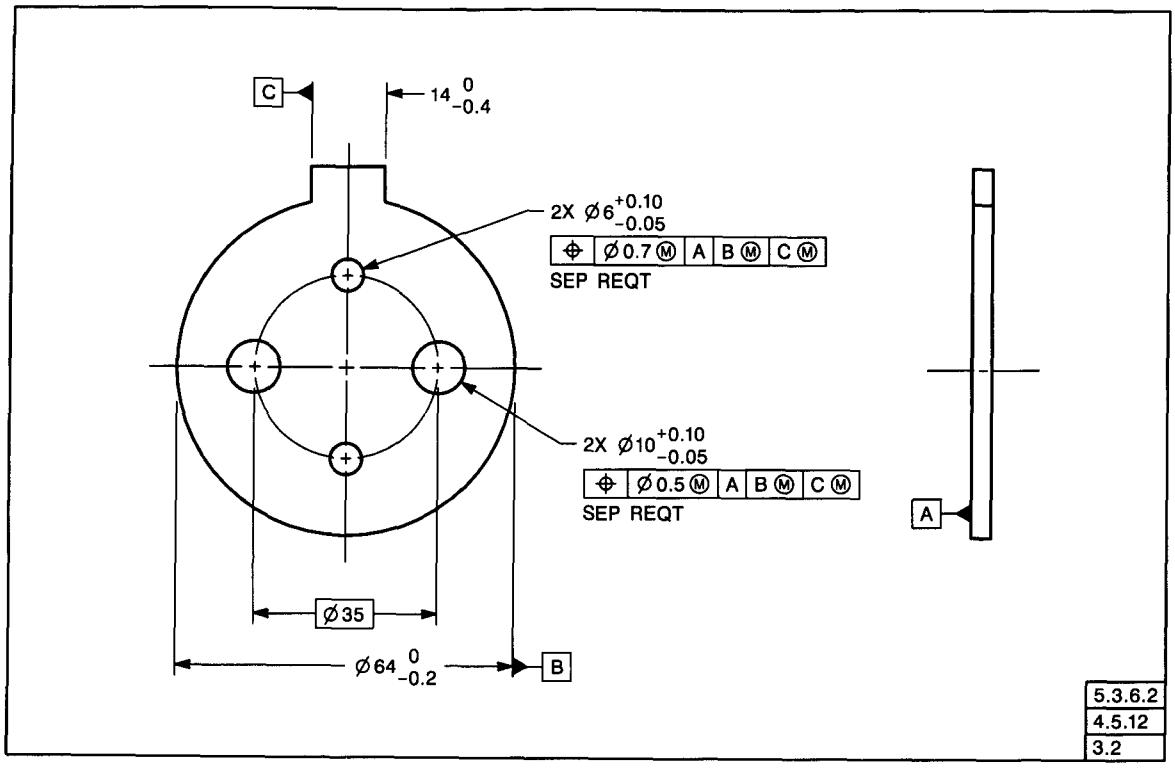

FIG. 5-18 MULTIPLE PATTERNS OF FEATURES, SEPARATE REQUIREMENTS

the use of a composite feature control frame. See para. 3.4.4 and Fig. 3-22(a). The position symbol is entered once and is applicable to both horizontal segments. Each complete horizontal segment in the feature control frames of Figs. 5-19 and 5-20 may be verified separately, but the lower segment is always a subset of the upper segment.

(a) Pattern-Locating Tolerance Zone Framework (PLTZF). Where composite controls are used, the upper segment is referred to as the pattern-locating control. The PLTZF is located from specified datums by basic dimensions. It specifies the larger positional tolerance for the location of the pattern of features as a group. Applicable datums are specified in a desired order of precedence, and serve to relate the PLTZF to the datum reference frame. See Figs. 5-19(a) and 5-20(a).

(b) Feature-Relating Tolerance Zone Framework (FRTZF). The lower segment is referred to as the feature-relating control. It governs the smaller positional tolerance for each feature within the pattern (feature-to-feature relationship). Basic dimensions used to relate the PLTZF to specified datums are not applicable to the FRTZF. See Figs. 5-19(b) and 5-20(b). Where datum references are not specified in the lower segment of the composite feature control frame, the FRTZF is free to be located and oriented (shift and/or tilt) within the boundaries established and governed by the PLTZF. If datums are specified in the lower segment, they govern the orientation of the FRTZF relative to the PLTZF. See Figs. 5-19(c) and 5-20(c). Where datum references are specified, one or more of the datums specified in the upper segment of the frame are repeated, as applicable, and in the same order of precedence, to govern the orientation of the FRTZF.

NOTE: If different datums, different datum modifiers, or the same datums in a different order of precedence are specified, this constitutes a different datum reference frame and design requirements. This is not to be specified using the composite positional tolerancing method, since such a requirement no longer represents a liberation-within-given-limits of the FRTZF. A separately-specified feature-relating tolerance, using a second single-segment feature control frame is used, including applicable datums, as an independent requirement. See Fig. 5-28.

5.4.1.1 Primary Datum Repeated in Lower Segment. As can be seen from the sectional view of the tolerance zones in Fig. 5-19(d), since datum plane A has been repeated in the lower segment of the composite feature control frame, the axes of both the PLTZF and FRTZF cylinders are perpendicular

Copyright ASME International
Provided by IHS under license with ASME
No reproduction or networking permitted without license from IHS
Not for Resale

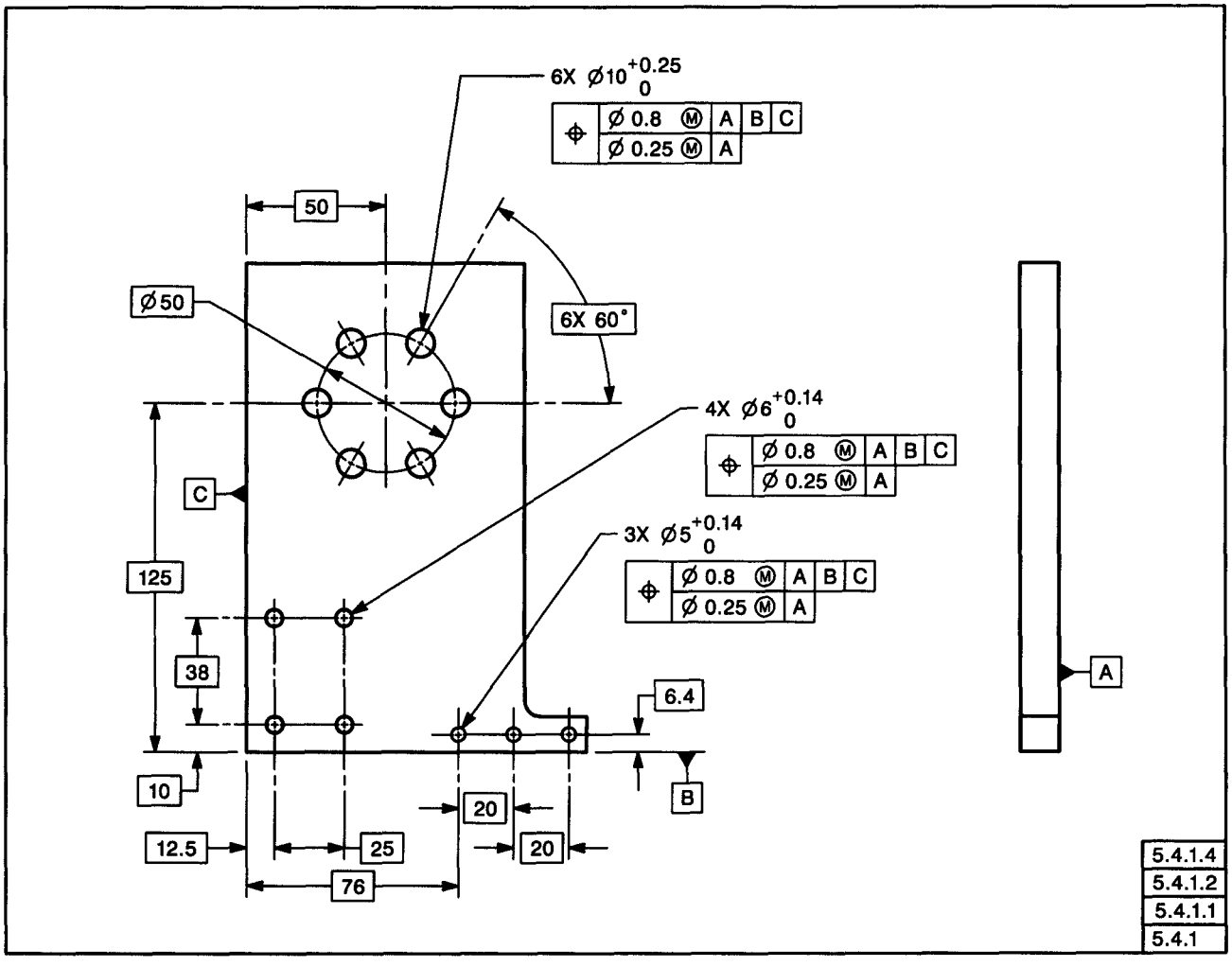

FIG. 5-19 HOLE PATTERNS LOCATED BY COMPOSITE POSITIONAL TOLERANCING

Copyright ASME International
Provided by IHS under license with ASME
No reproduction or networking permitted without license from IHS
Not for Resale

FIG. 5-19(a)

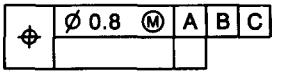

FIRST PART OF CALLOUT MEANS THIS:

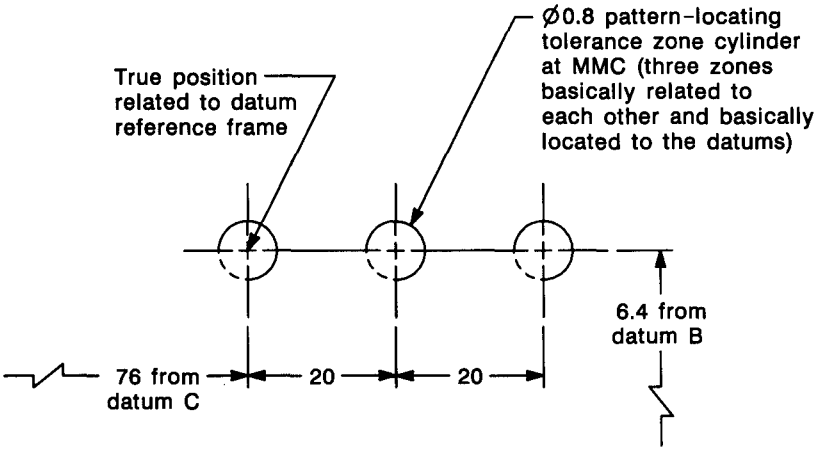

Pattern-locating tolerance zone framework (PLTZF) basically located relative to the specified datum reference frame.

FIG. 5-19(b)

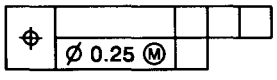

SECOND PART OF CALLOUT MEANS THIS:

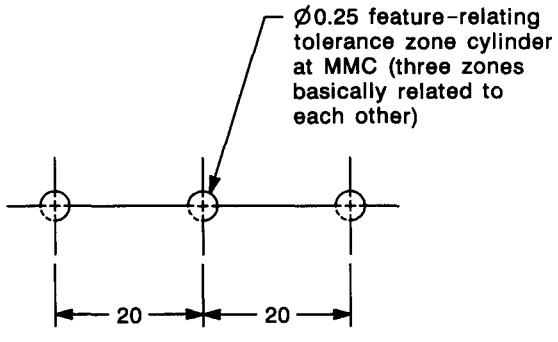

Feature-relating tolerance zone framework (FRTZF)

FIG. 5-19 HOLE PATTERNS LOCATED BY COMPOSITE POSITIONAL TOLERANCING (CONT'D)
Tolerance Zones for Three-Hole Pattern

Copyright ASME International
Provided by IHS under license with ASME
No reproduction or networking permitted without license from IHS
Not for Resale

FIG. 5-19(c)

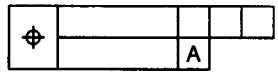

ADDITIONALLY, SECOND PART OF CALLOUT MEANS THIS:

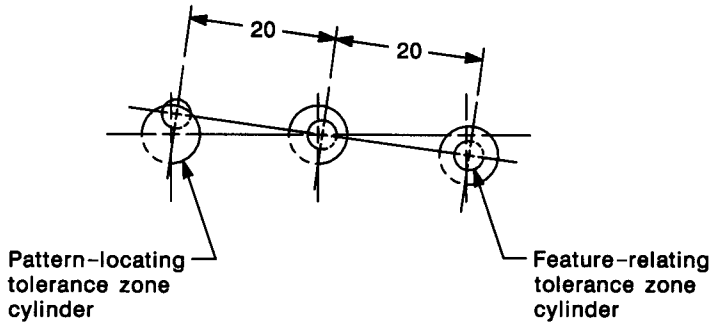

One possible displacement of feature-relating tolerance zone framework (FRTZF) relative to pattern-locating tolerance zone framework (PLTZF).

FIG. 5-19(d)

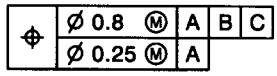

ADDITIONALLY, SECOND PART OF CALLOUT MEANS THIS:

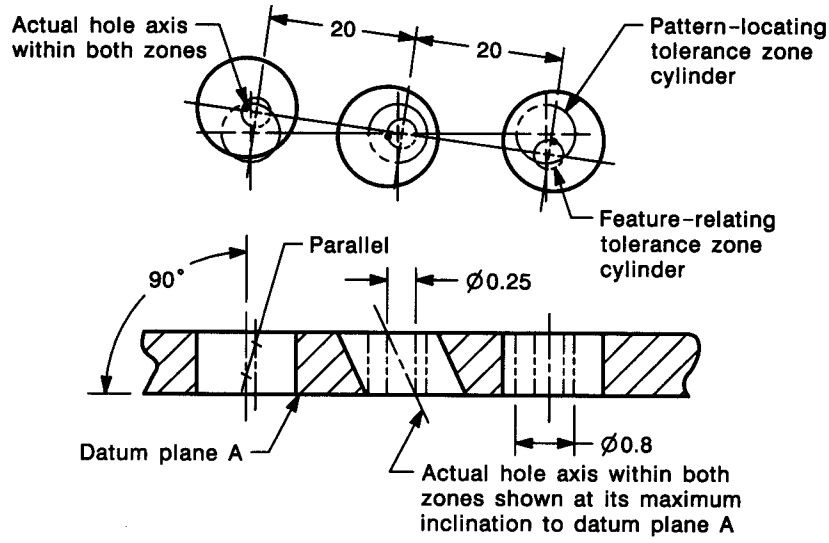

One possible displacement of actual feature pattern

FIG. 5-19 HOLE PATTERNS LOCATED BY COMPOSITE POSITIONAL TOLERANCING (CONT'D)
Tolerance Zones for Three-Hole Pattern (Cont'd)

Copyright ASME International
Provided by IHS under license with ASME
No reproduction or networking permitted without license from IHS
Not for Resale

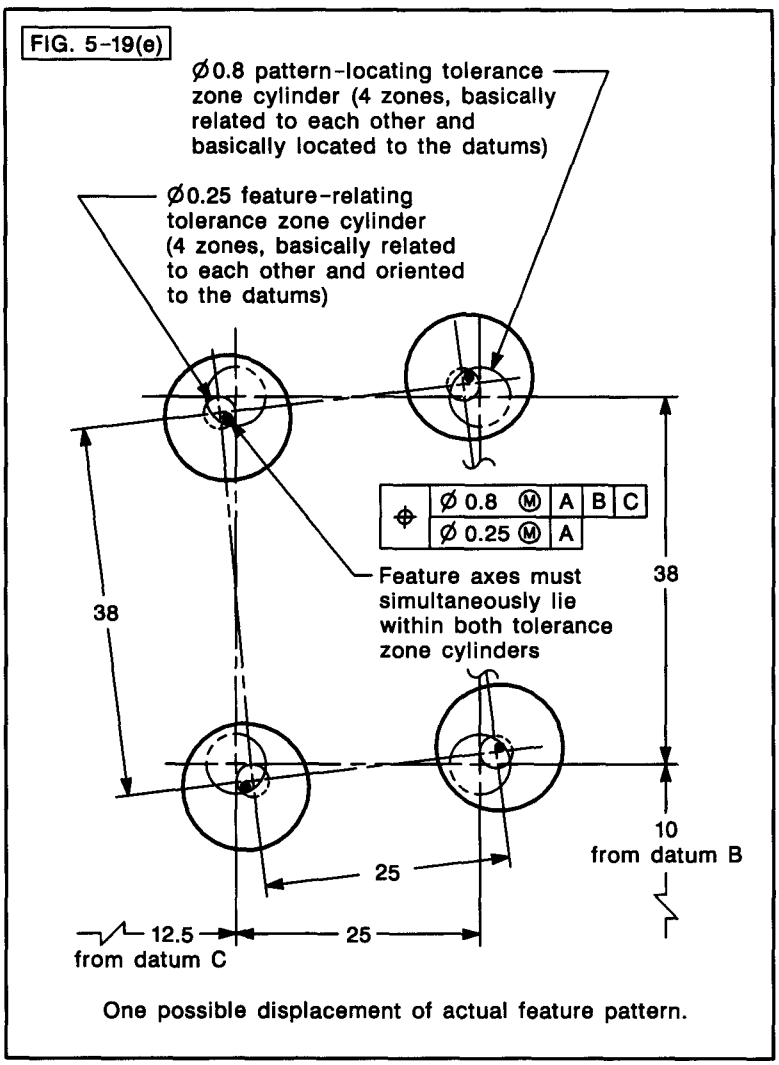

FIG. 5-19 HOLE PATTERNS LOCATED BY COMPOSITE POSITIONAL TOLERANCING (CONT'D)
Tolerance Zones for Four-Hole Pattern

Copyright ASME International
Provided by IHS under license with ASME
No reproduction or networking permitted without license from IHS
Not for Resale

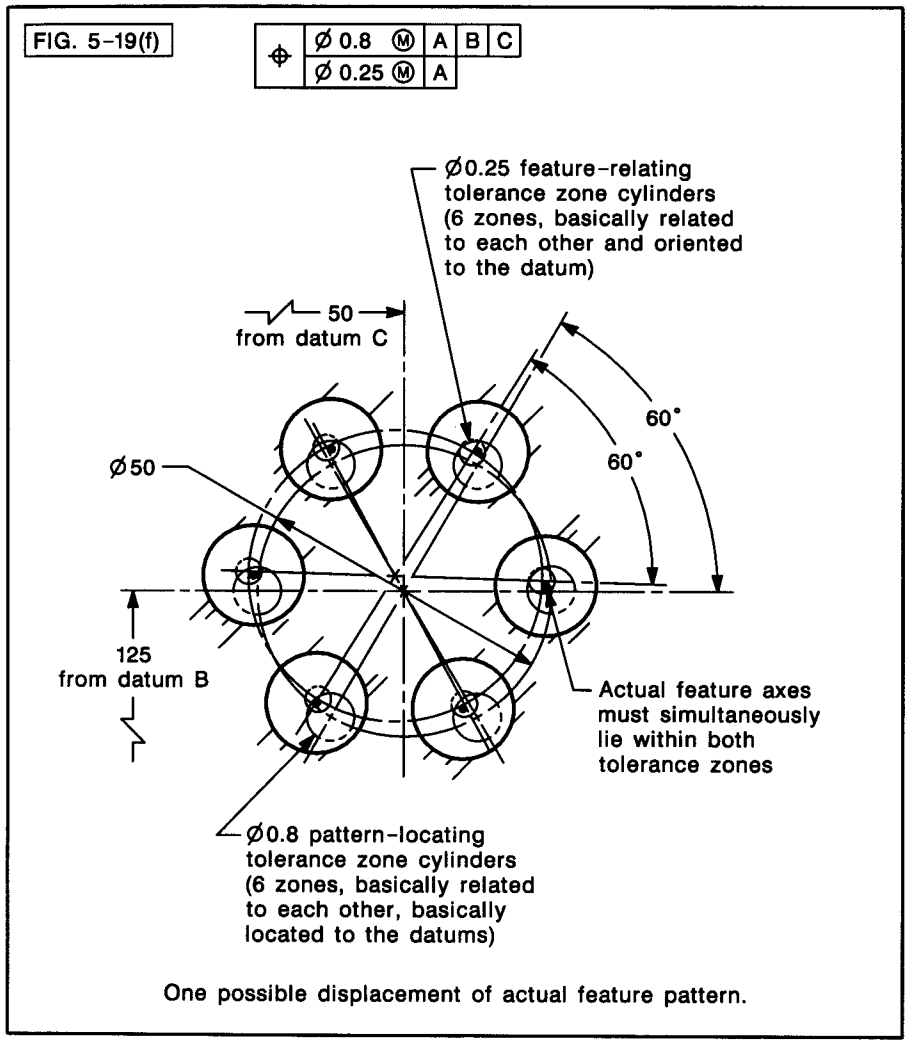

FIG. 5-19 HOLE PATTERNS LOCATED BY COMPOSITE POSITIONAL TOLERANCING (CONT'D)
Tolerance Zones for Six-Hole Pattern

Copyright ASME International
Provided by IHS under license with ASME
No reproduction or networking permitted without license from IHS
Not for Resale

FIG. 5-19(g)

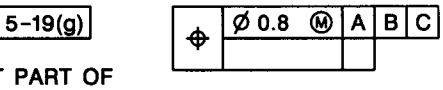

FIRST PART OF CALLOUT MEANS THIS:

No portion of the surface of any hole is permitted to be inside its respective Ø4.2 pattern-locating boundary, each boundary being basically located in relation to the specific datum reference frame.

FIG. 5-19(h)

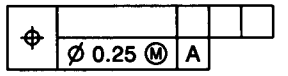

SECOND PART OF CALLOUT MEANS THIS:

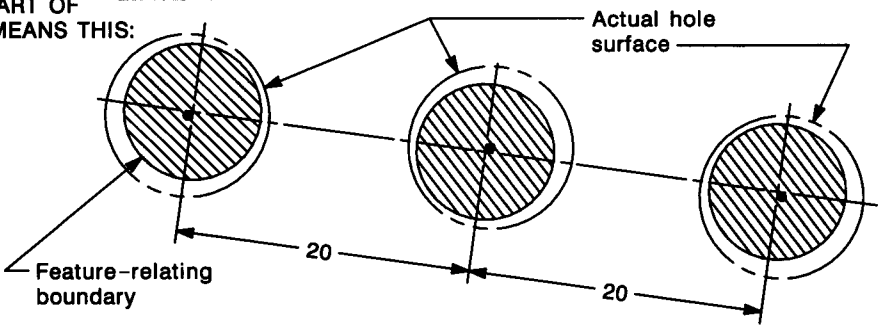

No portion of the surface of any hole is permitted to be inside its respective Ø4.75 feature-relating boundary, each boundary being basically related to the other and basically oriented to datum plane A.

FIG. 5-19(i)

Ø5 MMC of hole
-Ø0.8 pattern-locating tolerance
Ø4.2 acceptance boundary

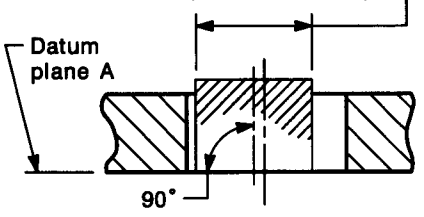

Pattern-locating boundary shown with hole nearing its maximum positional shift.

Ø5 MMC of hole
-Ø0.25 feature-locating tolerance
Ø4.75 acceptance boundary

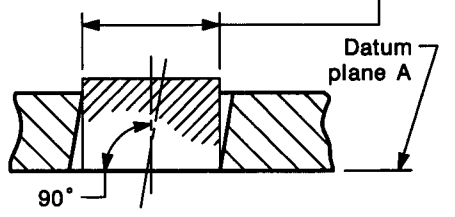

Feature-relating boundary shown with hole at its maximum inclination in relation to datum plane A.

(Note: Verifications are made independent of each other)

FIG. 5-19 HOLE PATTERNS LOCATED BY COMPOSITE POSITIONAL TOLERANCING (CONT'D)
Acceptance Boundaries for Three-Hole Pattern

Copyright ASME International
Provided by IHS under license with ASME
No reproduction or networking permitted without license from IHS Not for Resale

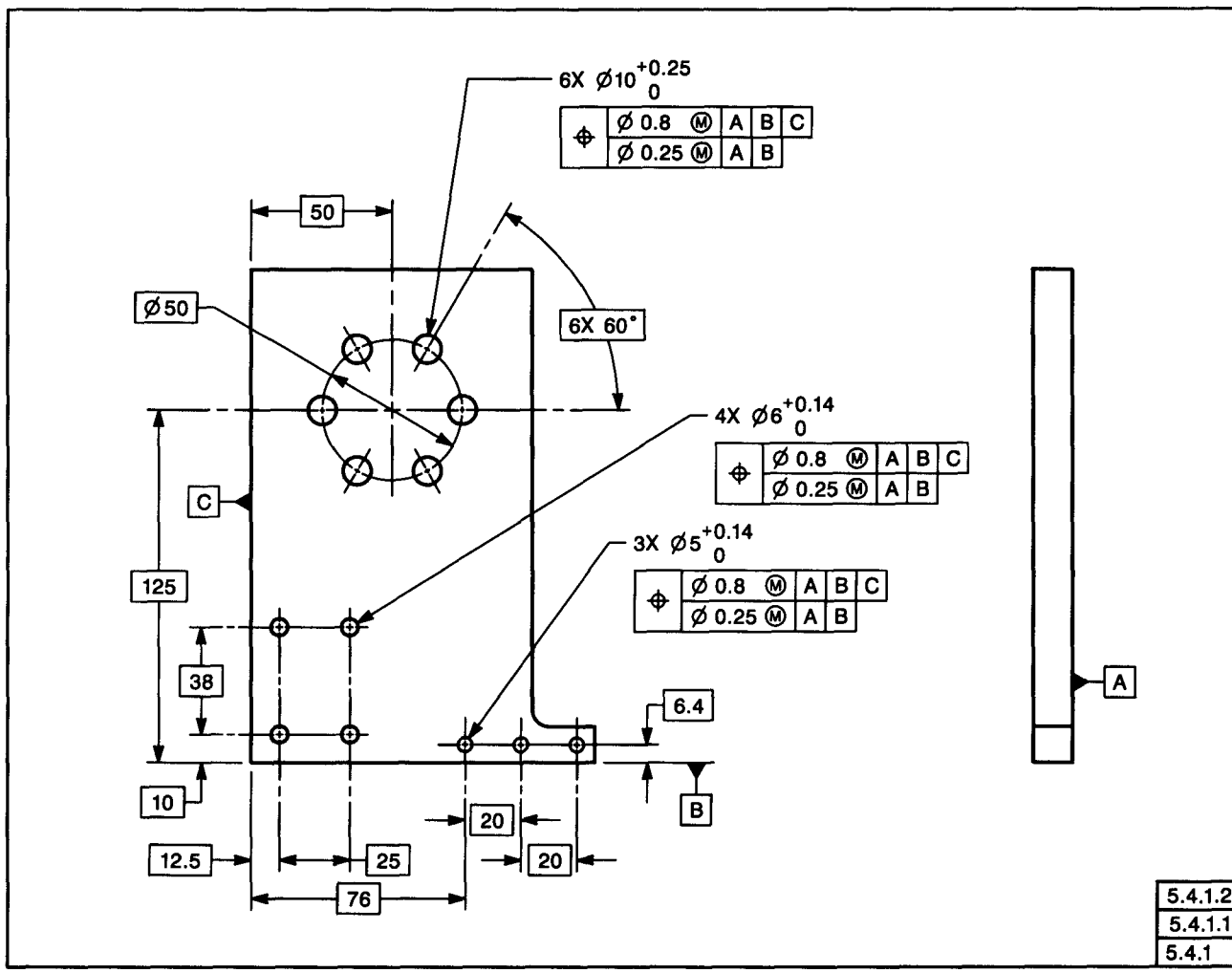

FIG. 5-20 HOLE PATTERNS OF FIG. 5-19 WITH SECONDARY DATUMS IN FEATURE-RELATING SEGMENTS OF COMPOSITE FEATURE CONTROL FRAMES

Copyright ASME International
Provided by IHS under license with ASME
No reproduction or networking permitted without license from IHS
Not for Resale

FIG. 5-20(a)

⌖	Ø 0.8 Ⓜ	A	B	C

FIRST PART OF CALLOUT MEANS THIS:

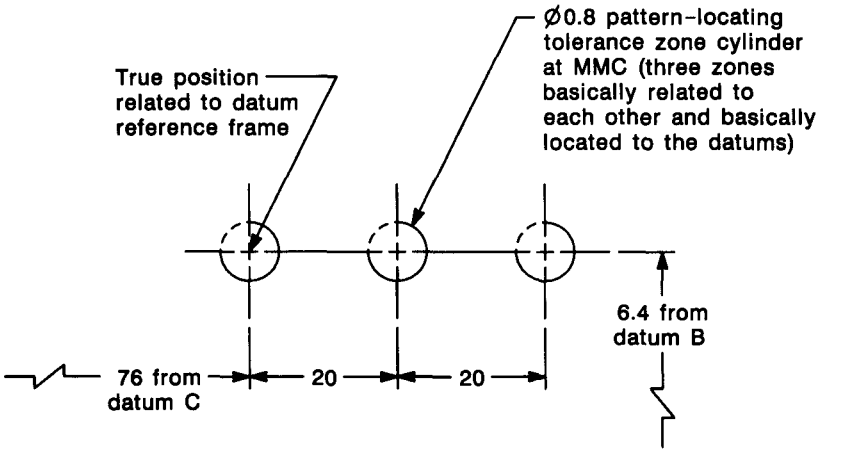

Pattern-locating tolerance zone framework (PLTZF) basically located relative to the specified datum reference frame.

FIG. 5-20(b)

⌖				
	Ø 0.25 Ⓜ			

SECOND PART OF CALLOUT MEANS THIS:

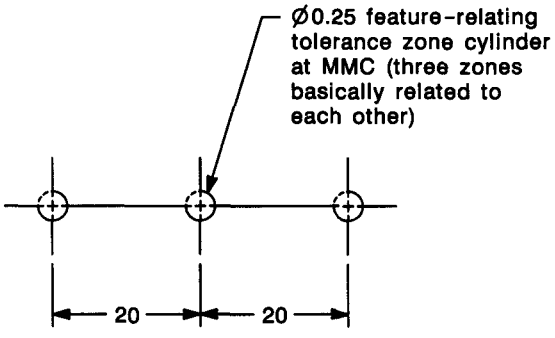

Feature-relating tolerance zone framework (FRTZF)

FIG. 5-20 HOLE PATTERNS OF FIG. 5-19 WITH SECONDARY DATUMS IN FEATURE-RELATING SEGMENTS OF COMPOSITE FEATURE CONTROL FRAMES (CONT'D)
Tolerance Zones for Three-Hole Pattern

Copyright ASME International
Provided by IHS under license with ASME
No reproduction or networking permitted without license from IHS
Not for Resale

FIG. 5-20(c)

⌖				
		A	B	

ADDITIONALLY, SECOND PART OF CALLOUT MEANS THIS:

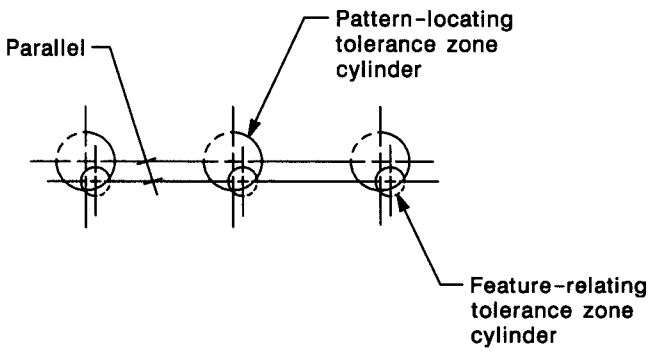

One possible displacement of feature-relating tolerance zone framework (FRTZF) relative to pattern-locating tolerance zone framework (PLTZF).

FIG. 5-20(d)

⌖	Ø 0.8 Ⓜ	A	B	C
	Ø 0.25 Ⓜ	A	B	

ADDITIONALLY, SECOND PART OF CALLOUT MEANS THIS:

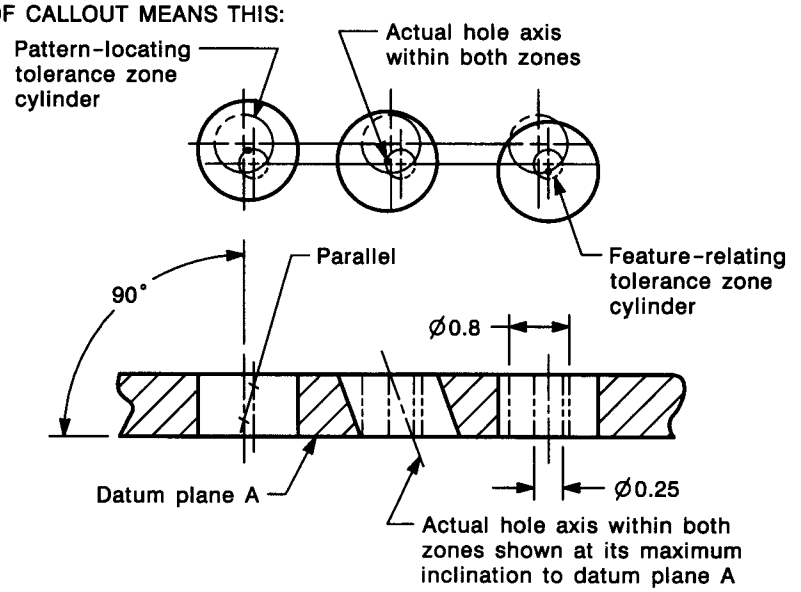

One possible displacement of actual feature pattern.

FIG. 5-20 HOLE PATTERNS OF FIG. 5-19 WITH SECONDARY DATUMS IN FEATURE-RELATING SEGMENTS OF COMPOSITE FEATURE CONTROL FRAMES (CONT'D)
Tolerance Zones for Three-Hole Pattern (Cont'd)

Copyright ASME International
Provided by IHS under license with ASME
No reproduction or networking permitted without license from IHS
Not for Resale

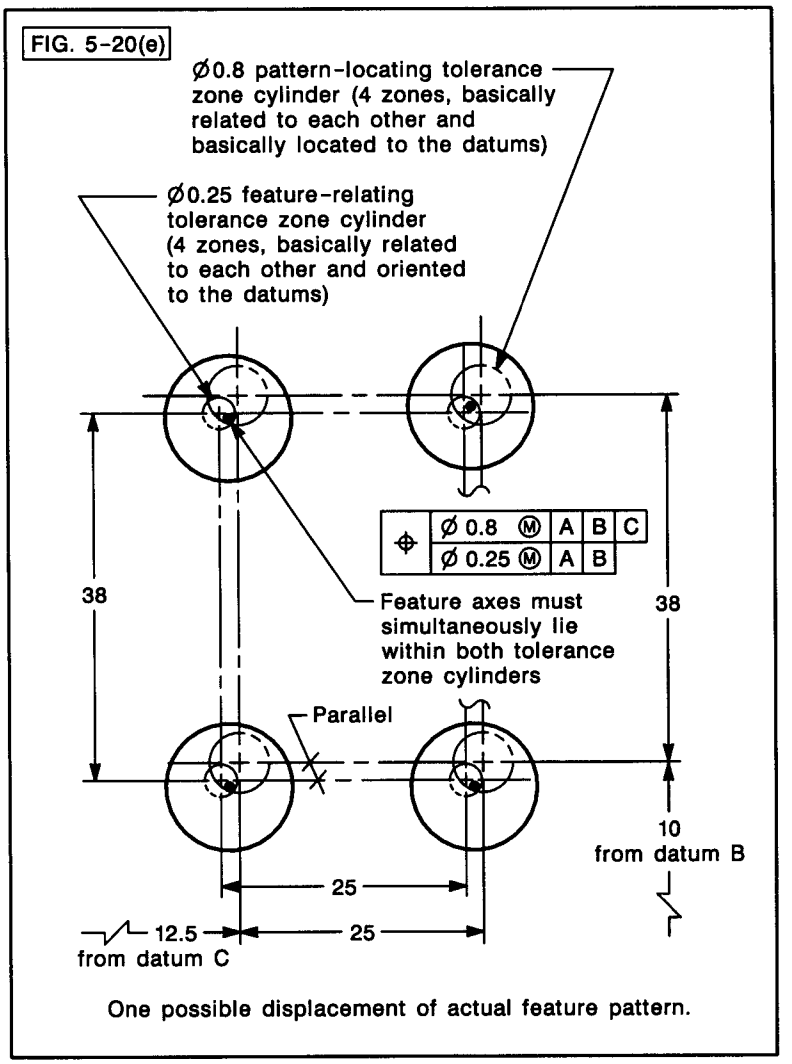

FIG. 5-20 HOLE PATTERNS OF FIG. 5-19 WITH SECONDARY DATUMS IN FEATURE-RELATING SEGMENTS OF COMPOSITE FEATURE CONTROL FRAMES (CONT'D)
Tolerance Zones for Four-Hole Pattern

Copyright ASME International
Provided by IHS under license with ASME
No reproduction or networking permitted without license from IHS
Not for Resale

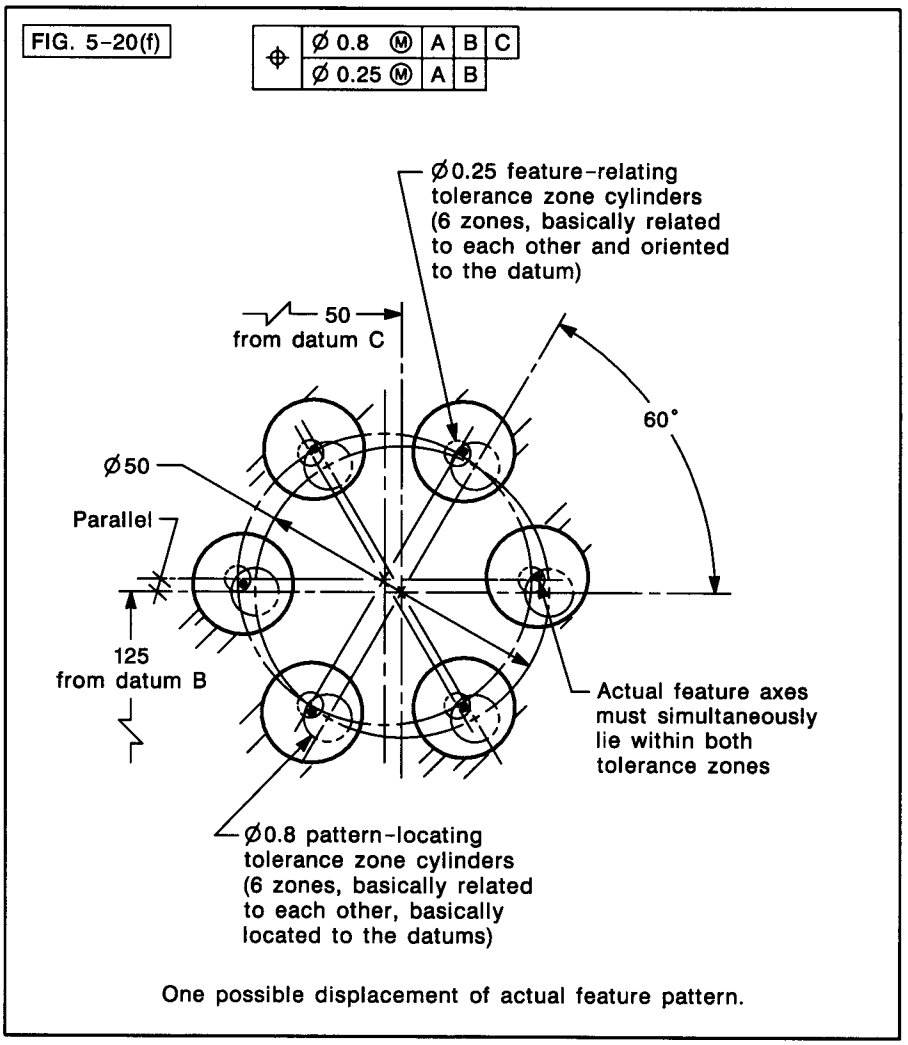

FIG. 5-20 HOLE PATTERNS OF FIG. 5-19 WITH SECONDARY DATUMS IN FEATURE-RELATING SEGMENTS OF COMPOSITE FEATURE CONTROL FRAMES (CONT'D)
Tolerance Zones for Six-Hole Pattern

to datum plane A and therefore, parallel to each other. In certain instances, portions of the smaller zones may fall beyond the peripheries of the larger tolerance zones. However, these portions of the smaller tolerance zones are not usable because the axes of the features must not violate the boundaries of the larger tolerance zones. The axes of the holes must lie within the larger tolerance zones and within the smaller tolerance zones. The axes of the actual holes may vary obliquely (out of perpendicularity) only within the confines of the respective smaller positional tolerance zones (FRTZF). Figure 5-19(e) repeats the heretofore-described relationships for the four-hole pattern, and Fig. 5-19(f) for the six-hole pattern of features shown in Fig. 5-19.

NOTE: The zones in Figs. 5-19 and 5-20 are shown as they exist at MMC of the features. The large zones would increase in size by the amount the features depart from MMC, as would the smaller zones; the two zones are not cumulative.

5.4.1.2 Primary and Secondary Datums Repeated in Lower Segment. Figure 5-20 repeats the hole patterns of Fig. 5-19. In Fig. 5-20, the lower segment of the composite feature control frame repeats datums A and B. Figure 5-20(c) shows that the tolerance cylinders of the FRTZF may be displaced from the true position locations (as a group) as governed by the tolerance cylinders of the PLTZF, while remaining perpendicular to datum plane A and parallel to datum plane B. Figure 5-20(d) shows that the actual axes of the holes in the actual feature pattern must reside within both the tolerance cylinders of the FRTZF and the PLTZF. Figure 5-20(e) repeats the heretofore-described relationships for the four-hole

Copyright ASME International
Provided by IHS under license with ASME
No reproduction or networking permitted without license from IHS
Not for Resale

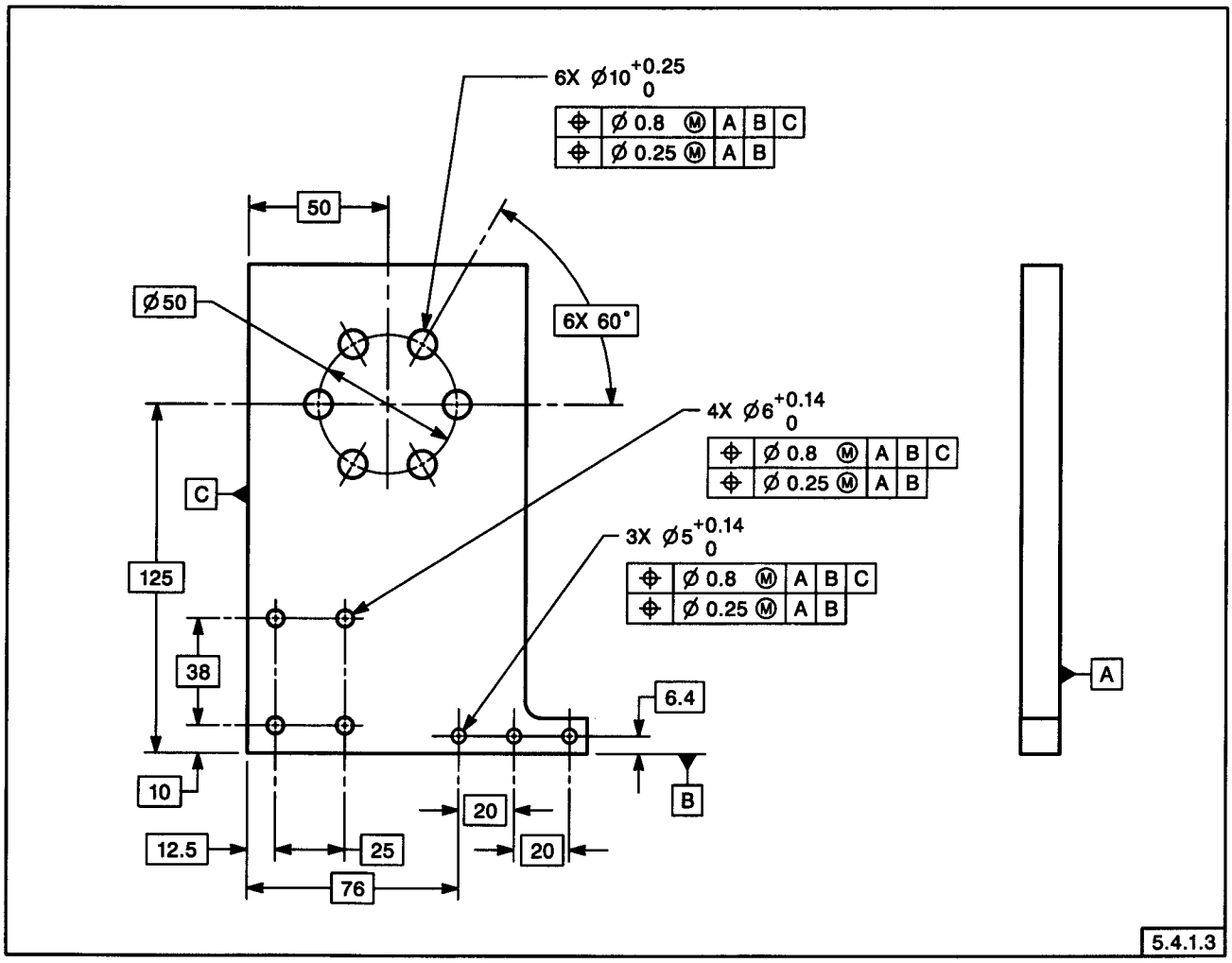

FIG. 5-21 HOLE PATTERNS OF FIG. 5-19. TWO SINGLE-SEGMENT FEATURE CONTROL FRAMES WITH SECONDARY DATUM IN LOWER FEATURE CONTROL FRAME

pattern, and Fig. 5-20(f) for the six-hole pattern of features shown in Fig. 5-20.

5.4.1.3 Two Single-Segment Feature Control Frames. Where it is desired to invoke basic dimensions along with the datum references, single-segment feature control frames are used. See Fig. 3-22(b). Figure 5-21 shows two single-segment feature control frames. The lower feature control frame repeats datums A and B. Figure 5-21(c) shows that the tolerance cylinders of the FRTZF (as a group) are free to be displaced to the left or right as governed by the basically-located tolerance cylinders of the PLTZF, while remaining perpendicular to datum plane A and parallel to datum plane B. Figure 5-21(d) shows that the actual axes of the holes in the actual feature pattern must reside within both the tolerance cylinders of the FRTZF and the PLTZF. Figure 5-21(e) repeats the heretofore-described relationships for the four-hole pattern, and Fig. 5-21(f) for the six-hole pattern of features shown in Fig. 5-21.

5.4.1.4 In Terms of Hole Surfaces. Figures 5-19(g) through (i) illustrate the same three-hole pattern of Figs. 5-19(a) through (d), explained in terms of hole surfaces relative to acceptance boundaries. See para. 5.3.2.1(a). By comparing Fig. 5-19(d) with Fig. 5-19(i), it can be seen that the result is the same for both axis and surface explanations except as noted in para. 5.3.2.1(b).

5.4.1.5 Applied to Circular Patterns of Features. Composite positional tolerancing may be ap-

Copyright ASME International
Provided by IHS under license with ASME
No reproduction or networking permitted without license from IHS
Not for Resale

FIG. 5-21(a)

⌖	Ø 0.8 Ⓜ	A	B	C

FIRST PART OF CALLOUT MEANS THIS:

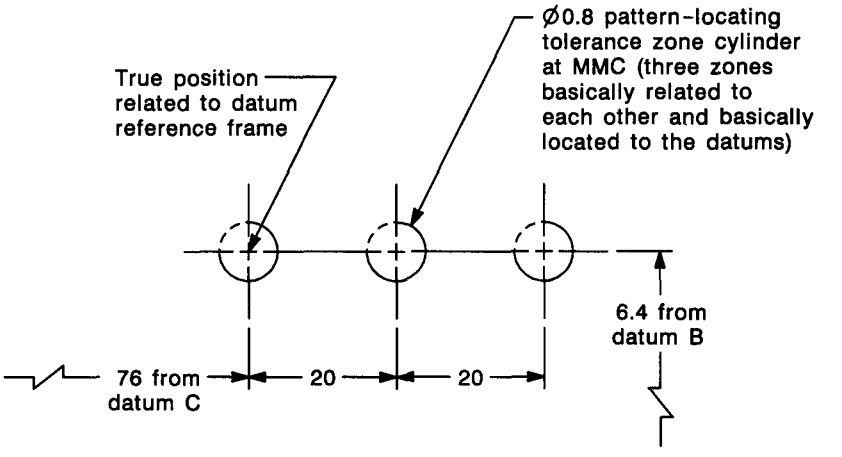

Pattern-locating tolerance zone framework (PLTZF) basically located relative to the specified datum reference frame.

FIG. 5-21(b)

⌖	Ø 0.25 Ⓜ	A	B

SECOND PART OF CALLOUT MEANS THIS:

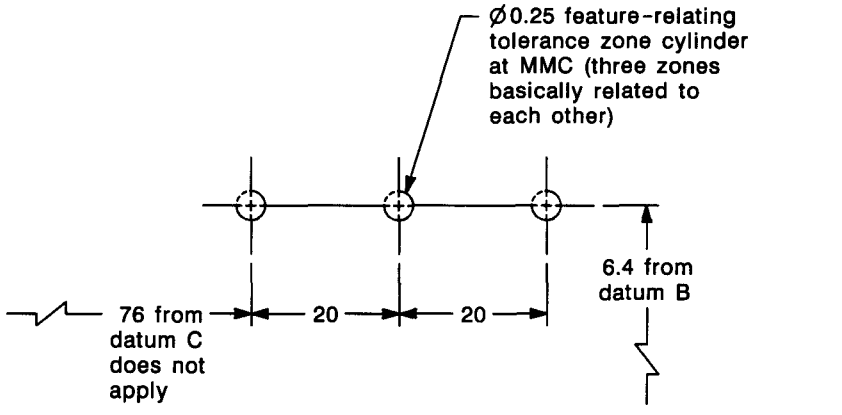

Feature-relating tolerance zone framework (FRTZF)

FIG. 5-21 HOLE PATTERNS OF FIG. 5-19. TWO SINGLE-SEGMENT FEATURE CONTROL FRAMES WITH SECONDARY DATUM IN LOWER FEATURE CONTROL FRAME (CONT'D)
Tolerance Zones for Three-Hole Pattern

Copyright ASME International
Provided by IHS under license with ASME
No reproduction or networking permitted without license from IHS
Not for Resale

FIG. 5-21(c)



ADDITIONALLY, SECOND PART OF CALLOUT MEANS THIS:

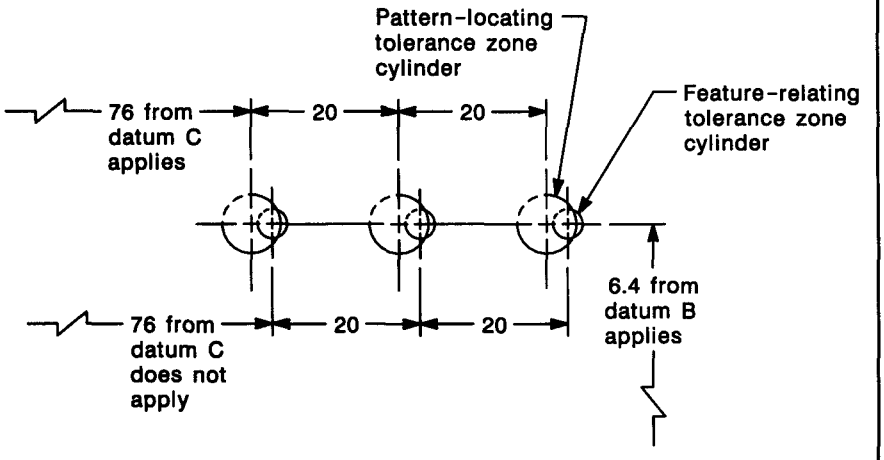

One possible displacement of feature-relating tolerance zone framework (FRTZF) relative to pattern-locating tolerance zone framework (PLTZF).

FIG. 5-21(d)

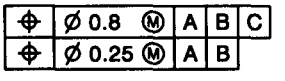

ADDITIONALLY, SECOND PART OF CALLOUT MEANS THIS:

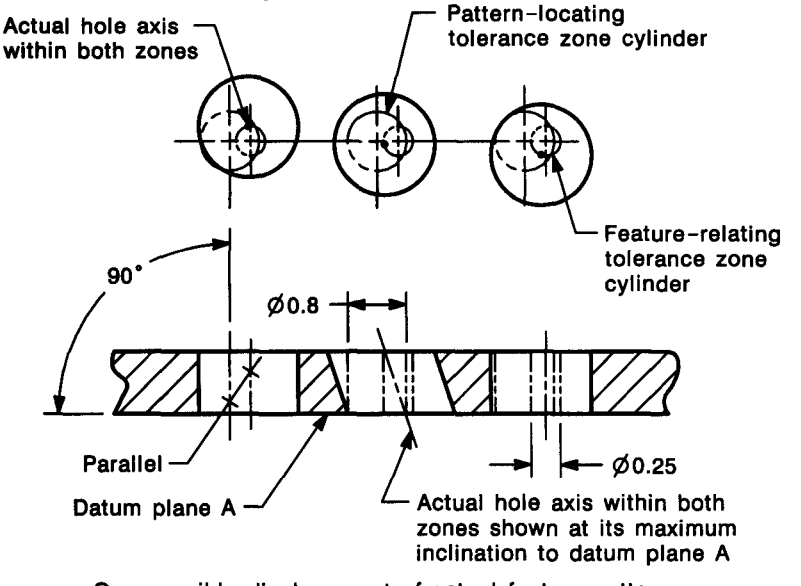

One possible displacement of actual feature pattern.

FIG. 5-21 HOLE PATTERNS OF FIG. 5-19. TWO SINGLE-SEGMENT FEATURE CONTROL FRAMES WITH SECONDARY DATUM IN LOWER FEATURE CONTROL FRAME (CONT'D)
Tolerance Zones for Three-Hole Pattern (Cont'd)

Copyright ASME International
Provided by IHS under license with ASME
No reproduction or networking permitted without license from IHS
Not for Resale

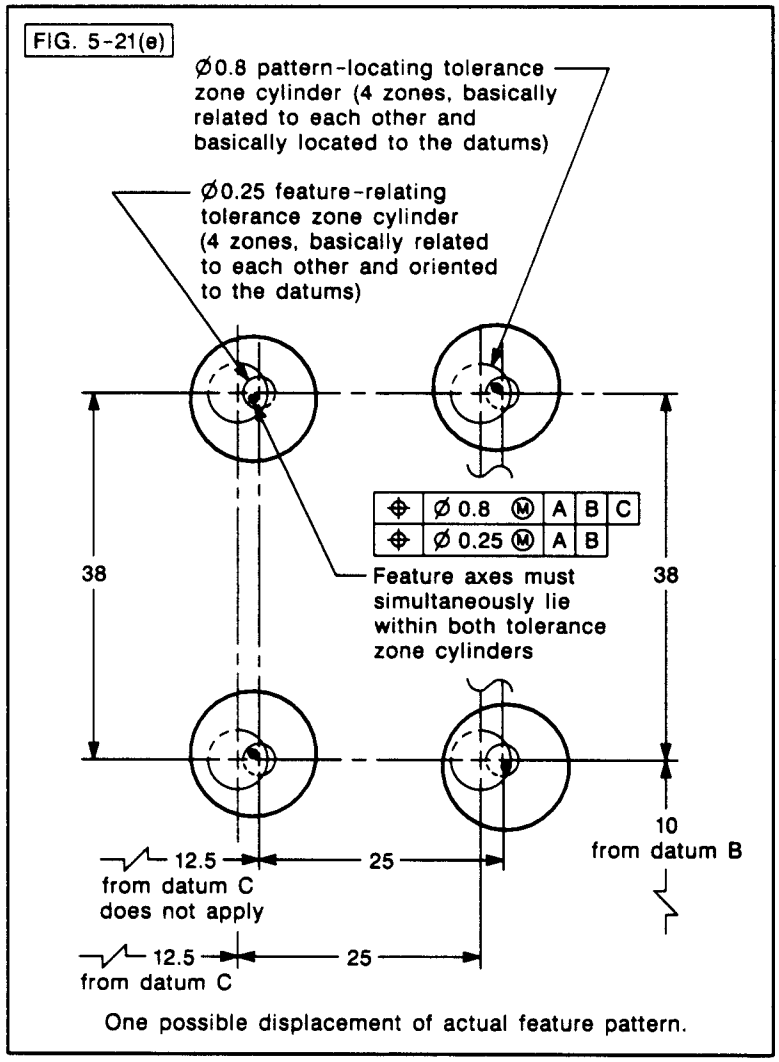

FIG. 5-21 HOLE PATTERNS OF FIG. 5-19. TWO SINGLE-SEGMENT FEATURE CONTROL FRAMES WITH SECONDARY DATUM IN LOWER FEATURE CONTROL FRAME (CONT'D)
Tolerance Zones for Four-Hole Pattern

Copyright ASME International
Provided by IHS under license with ASME
No reproduction or networking permitted without license from IHS
Not for Resale

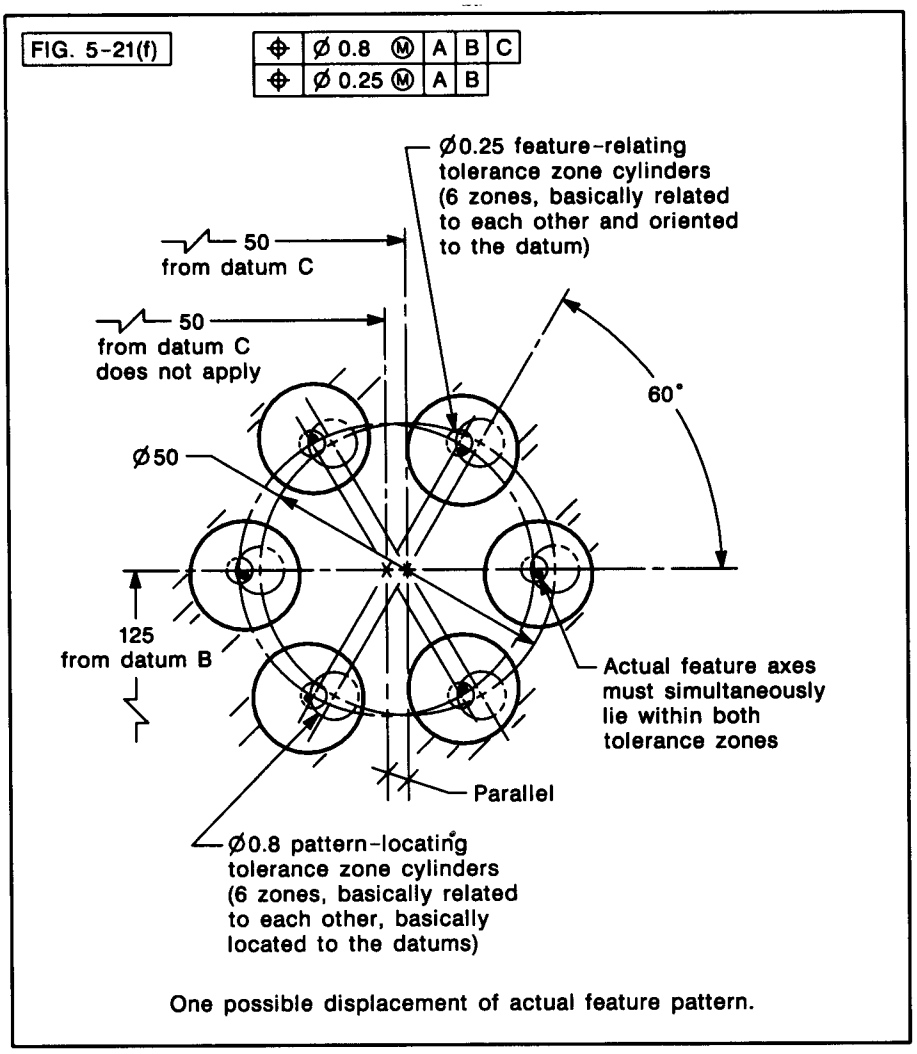

FIG. 5-21 HOLE PATTERNS OF FIG. 5-19. TWO SINGLE-SEGMENT FEATURE CONTROL FRAMES WITH SECONDARY DATUM IN LOWER FEATURE CONTROL FRAME (CONT'D)
Tolerance Zones for Six-Hole Pattern

plied to patterns of features on circular parts. See Fig. 5-22. With datum A repeated in the lower segment of the composite feature control frame, Figs. 5-22(c) and (d) shows the tolerance cylinders of the FRTZF displaced (as a group) from the basic locations within the bounds imposed by the PLTZF, while maintaining a perpendicularity relationship with datum plane A. Figure 5-23 shows two single-segment feature control frames. These are used where it is desired to establish a coaxiality relationship between the FRTZF and the PLTZF. Figure 5-23(c) shows that the FRTZF may rotate relative to the PLTZF. Figure 5-23(d) shows that the actual hole axes of the actual feature pattern must reside within both the tolerance cylinders of the FRTZF and the PLTZF.

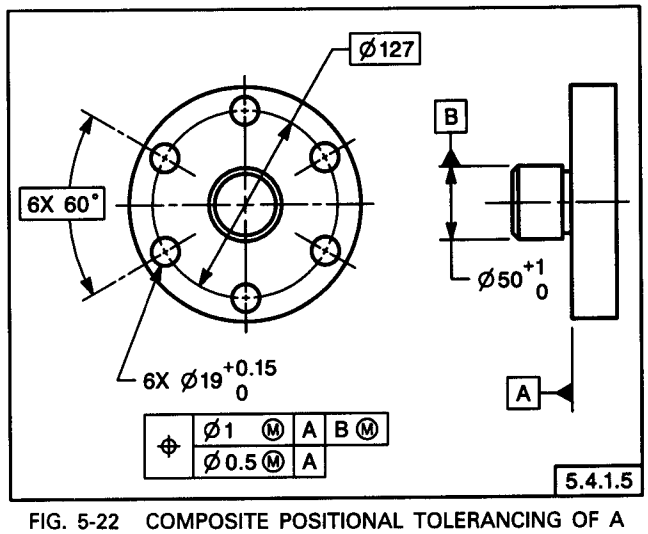

FIG. 5-22 COMPOSITE POSITIONAL TOLERANCING OF A CIRCULAR PATTERN OF FEATURES

Copyright ASME International
Provided by IHS under license with ASME
No reproduction or networking permitted without license from IHS
Not for Resale

FIG. 5-22(a)

FIRST PART OF
CALLOUT MEANS THIS:

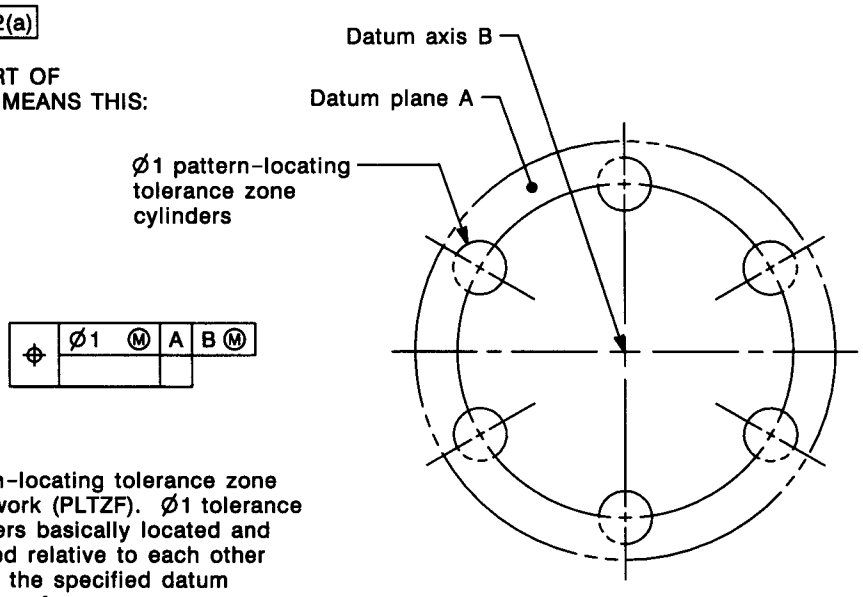

Pattern-locating tolerance zone framework (PLTZF). Ø1 tolerance cylinders basically located and oriented relative to each other and to the specified datum reference frame.

FIG. 5-22(b)

SECOND PART OF
CALLOUT MEANS THIS:

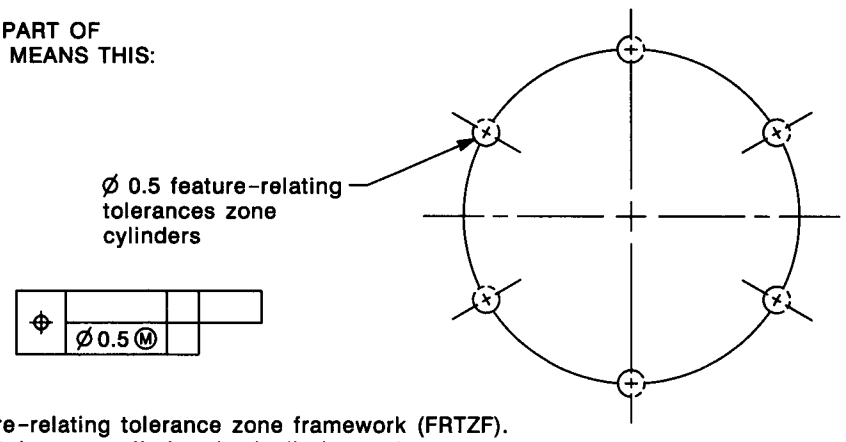

Feature-relating tolerance zone framework (FRTZF). Ø0.5 tolerance cylinders basically located and oriented relative to each other.

FIG. 5-22 COMPOSITE POSITIONAL TOLERANCING OF A CIRCULAR PATTERN OF FEATURES (CONT'D)

Copyright ASME International
Provided by IHS under license with ASME
No reproduction or networking permitted without license from IHS
Not for Resale

FIG. 5-22(c)

ADDITIONALLY, SECOND PART OF CALLOUT MEANS THIS:

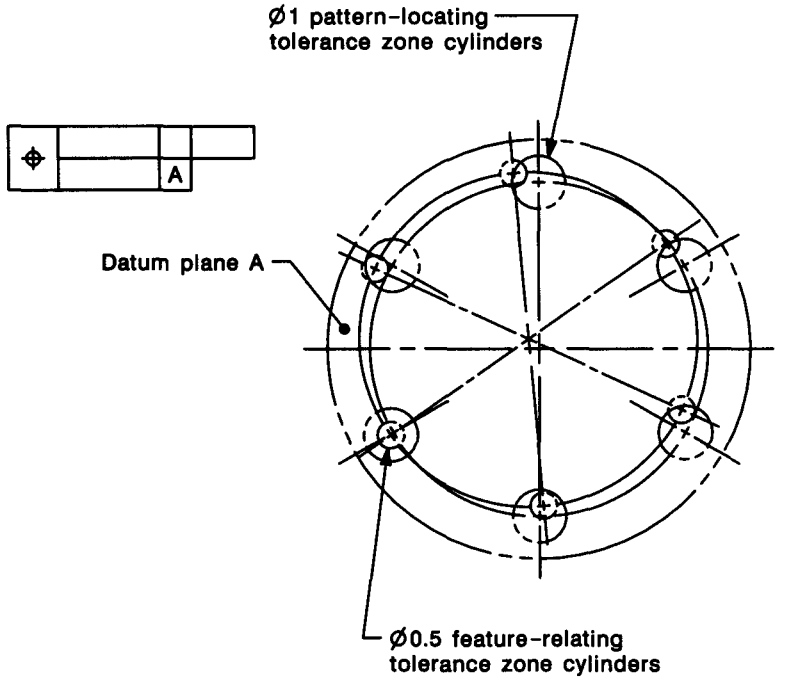

One possible location and orientation of feature-relating tolerance zone framework (FRTZF) relative to pattern-locating tolerance zone framework (PLTZF).

FIG. 5-22 COMPOSITE POSITIONAL TOLERANCING OF A CIRCULAR PATTERN OF FEATURES (CONT'D)

Copyright ASME International
Provided by IHS under license with ASME
No reproduction or networking permitted without license from IHS
Not for Resale

FIG. 5-22(d)

ADDITIONALLY, SECOND PART OF CALLOUT MEANS THIS:

⌖	Ø1 Ⓜ	A	B Ⓜ
	Ø0.5 Ⓜ	A	

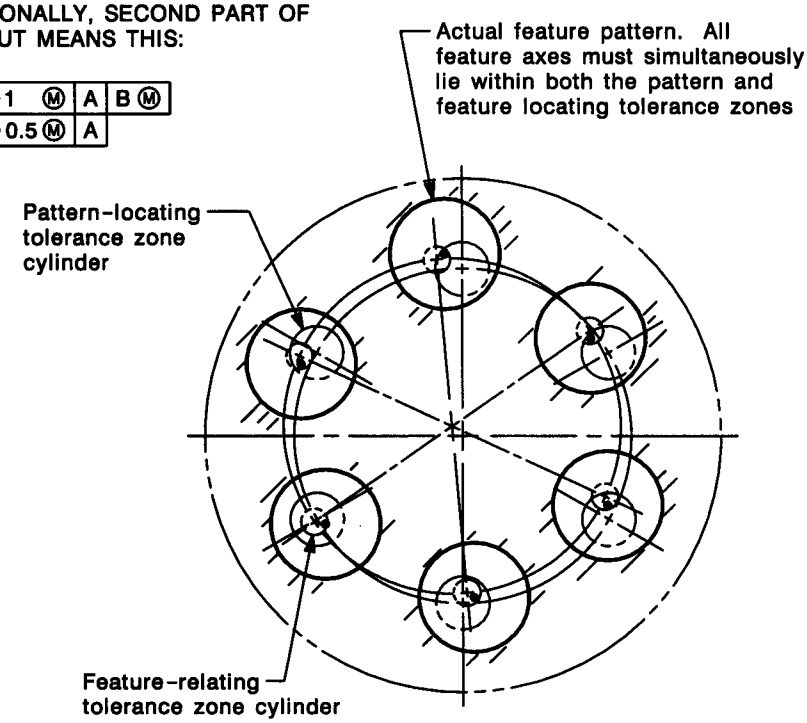

One possible location and orientation of actual feature pattern.

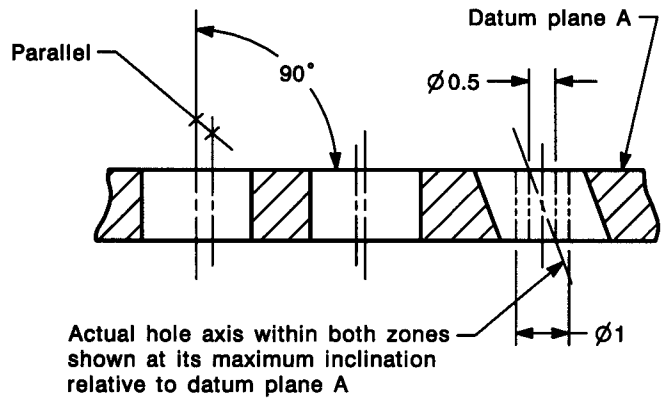

FIG. 5-22 COMPOSITE POSITIONAL TOLERANCING OF A CIRCULAR PATTERN OF FEATURES (CONT'D)

Copyright ASME International
Provided by IHS under license with ASME
No reproduction or networking permitted without license from IHS
Not for Resale

5.4.1.6 Radial Hole Pattern. Figure 5-24 shows an example of a radial hole pattern where the plane of the PLTZF is located from a datum face by a basic dimension. Where datum references are not specified in the lower segment of a composite feature control frame, the FRTZF is free to be located and oriented (shift and/or tilt) as governed by the tolerance zones of the PLTZF. The same explanation given in para. 5.4.1 also applies to Fig. 5-24. With datum plane A referenced in the lower segment of the composite feature control frame, the tolerance zones of the FRTZF (as a group) are parallel to datum plane A and may be displaced as governed by the tolerance zones of the PLTZF. Figure 5-26 shows two single-segment feature control frames. These are used where it is desired to specify a need for a coaxiality relationship between the FRTZF and the PLTZF. A secondary datum reference is shown in the lower feature control frame. Figure 5-26(c) shows that the tolerance zones of the FRTZF are parallel to datum plane A and concentric about datum axis B. While remaining parallel and concentric, the FRTZF may be displaced rotationally, as governed by the tolerance cylinders of the PLTZF. The axes of the features in the actual feature pattern may be displaced, individually or in concert, within the boundaries of the smaller tolerance cylinders. Portions of the smaller tolerance zones located outside the larger tolerance zones are not usable, since the actual feature axes must reside within the boundaries of both zones. Where two single-segment feature control frames are used and it is desired to avoid a reorientation of the workpiece in mid-operation, the same datums in the same order of precedence are specified to apply in the upper and lower feature control frames.

5.4.1.7 Where Radial Location is Important. The control shown in Figs. 5-25 and 5-27 may be specified where radial orientation is important, yet the design permits a feature-relating tolerance zone to be displaced within the bounds governed by a pattern-locating tolerance zone, while held parallel and perpendicular to the three mutually perpendicular planes of the datum reference frame.

5.4.1.8 Difference Between Composite Positional Tolerance and Two Single-Segment Feature Control Frames. Figure 5-29 explains the relationships of the FRTZF to the PLTZF established by a two-segment feature control frame having a single positional tolerance symbol (composite positional tolerance). Two different part configurations are shown for comparison. In contrast, Fig. 5-30 shows

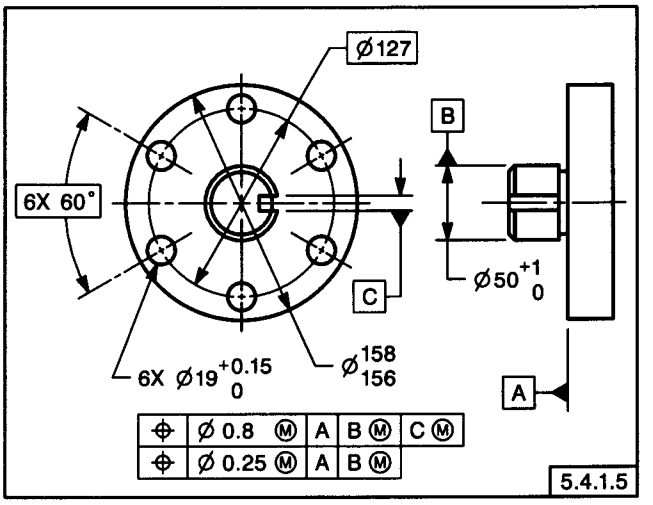

FIG. 5-23 POSITIONAL TOLERANCING WITH MULTIPLE SINGLE-SEGMENT FEATURE CONTROL FRAMES

the relationships established by two single-segment feature control frames.

5.5 PROJECTED TOLERANCE ZONE

The application of this concept is recommended where the variation in perpendicularity of threaded or press-fit holes could cause fasteners, such as screws, studs, or pins, to interfere with mating parts. See Fig. 5-31. An interference can occur where a tolerance is specified for the location of a threaded or press-fit hole, and the hole is inclined within the positional limits. Unlike the floating fastener application involving clearance holes only, the attitude of a fixed fastener is governed by the inclination of the produced hole into which it assembles. Figure 5-32 illustrates how the projected tolerance zone concept realistically treats the condition shown in Fig. 5-31. Note that it is the variation in perpendicularity of the portion of the fastener passing through the mating part that is significant. The location and perpendicularity of the threaded hole are only of importance insofar as they affect the extended portion of the engaging fastener. Where design considerations require a closer control in the perpendicularity of a threaded hole than that allowed by the positional tolerance, a perpendicularity tolerance applied as a projected tolerance zone may be specified. See Fig. 6-38.

5.5.1 Clearance Holes in Mating Parts. Specifying a projected tolerance zone will ensure that fixed fasteners do not interfere with mating parts having clearance hole sizes determined by the formulas recommended in Appendix B. Further enlarge-

Copyright ASME International
Provided by IHS under license with ASME
No reproduction or networking permitted without license from IHS
Not for Resale

FIG. 5-23(a)

FIRST PART OF CALLOUT MEANS THIS:

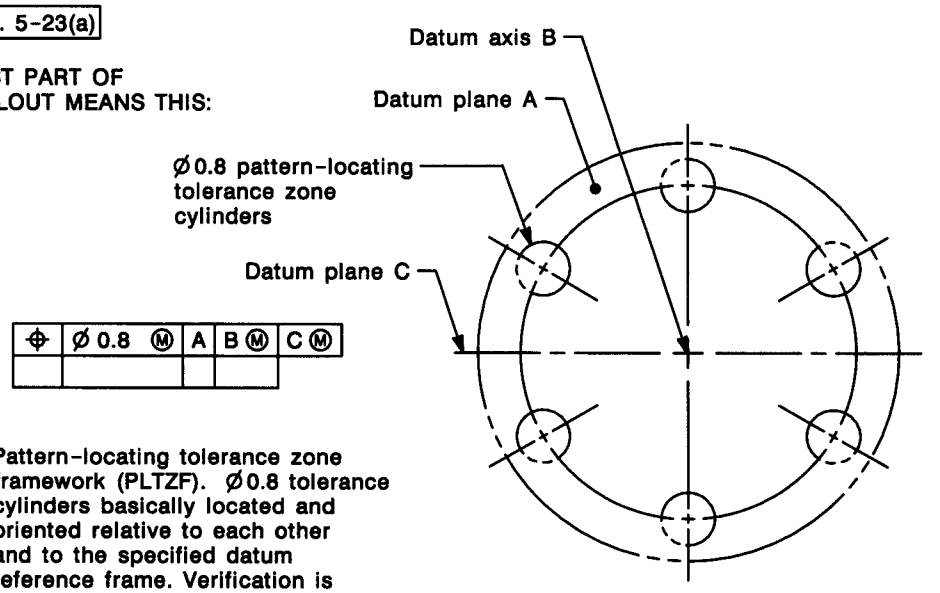

Pattern-locating tolerance zone framework (PLTZF). Ø0.8 tolerance cylinders basically located and oriented relative to each other and to the specified datum reference frame. Verification is independent of the lower segment.

FIG. 5-23(b)

SECOND PART OF CALLOUT MEANS THIS:

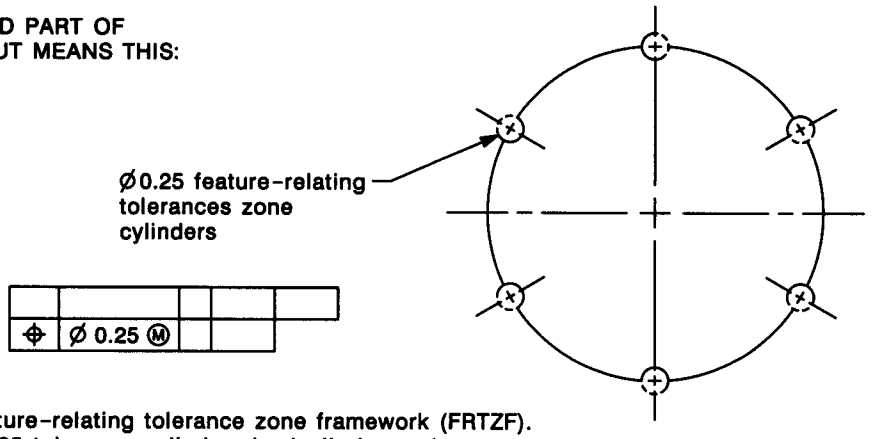

Feature-relating tolerance zone framework (FRTZF). Ø0.25 tolerance cylinders basically located and oriented relative to each other. Verification is independent of the upper segment.

FIG. 5-23 POSITIONAL TOLERANCING WITH MULTIPLE SINGLE-SEGMENT FEATURE CONTROL FRAMES (CONT'D)
Multiple Single-Segment Tolerancing of a Circular Pattern of Features

Copyright ASME International
Provided by IHS under license with ASME
No reproduction or networking permitted without license from IHS
Not for Resale

FIG. 5-23(c)

ADDITIONALLY, SECOND PART OF CALLOUT MEANS THIS:

⌖	Ø 0.25 Ⓜ	A	B Ⓜ	

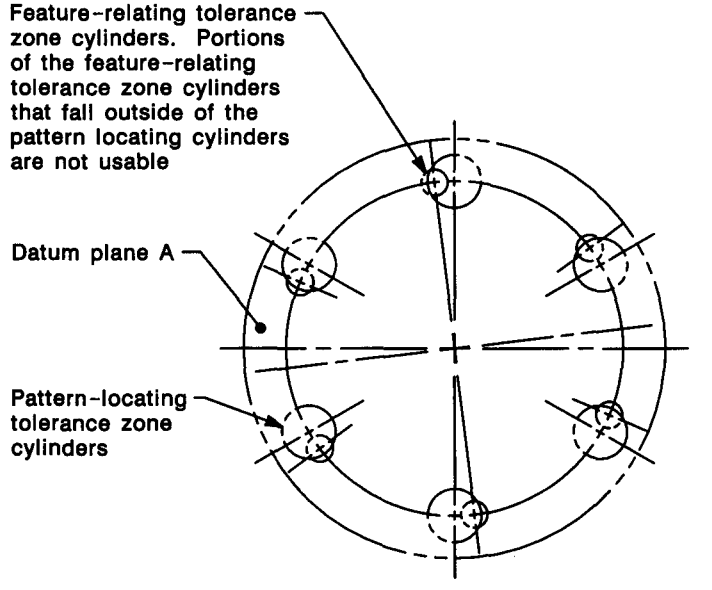

One possible displacement of feature-relating tolerance zone framework (FRTZF) relative to pattern-locating tolerance zone framework (PLTZF).

FIG. 5-23 POSITIONAL TOLERANCING WITH MULTIPLE SINGLE-SEGMENT FEATURE CONTROL FRAMES (CONT'D)
Multiple Single-Segment Tolerancing of a Circular Pattern of Features (Cont'd)

Copyright ASME International
Provided by IHS under license with ASME
No reproduction or networking permitted without license from IHS
Not for Resale

FIG. 5-23(d)

ADDITIONALLY, SECOND PART OF CALLOUT MEANS THIS:

⌖	Ø 0.8 Ⓜ	A	B Ⓜ	C Ⓜ
⌖	Ø 0.25 Ⓜ	A	B Ⓜ	

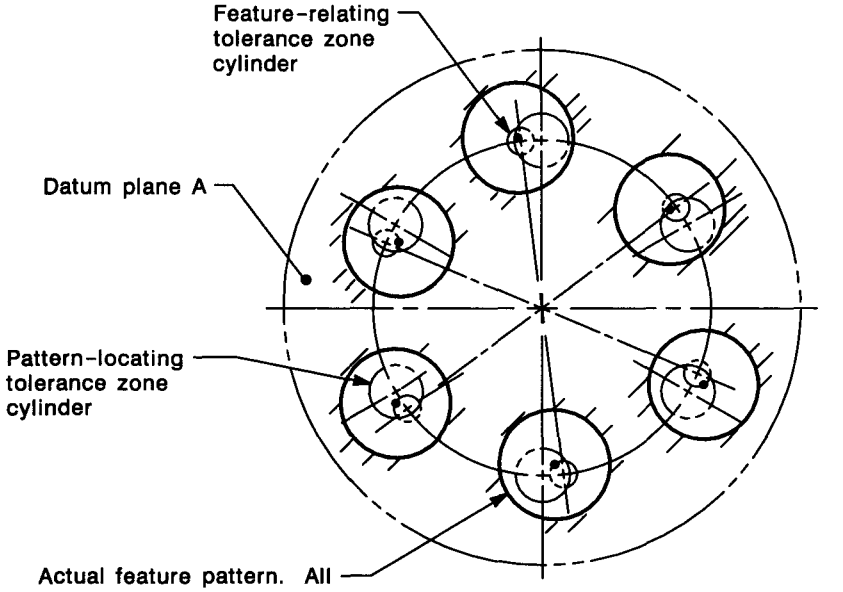

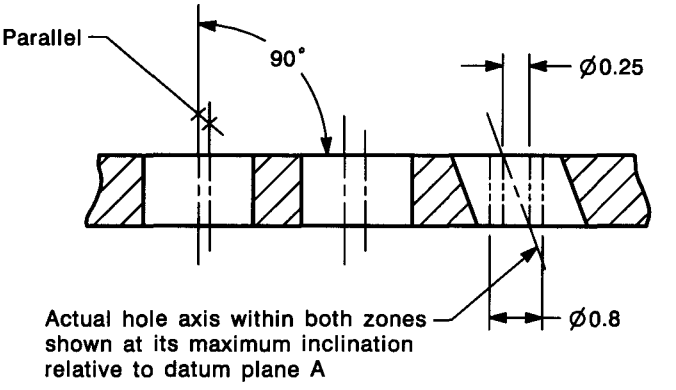

One possible displacement of actual feature pattern.

FIG. 5-23 POSITIONAL TOLERANCING WITH MULTIPLE SINGLE-SEGMENT FEATURE CONTROL FRAMES (CONT'D)
Multiple Single-Segment Tolerancing of a Circular Pattern of Features (Cont'd)

Copyright ASME International
Provided by IHS under license with ASME
No reproduction or networking permitted without license from IHS
Not for Resale

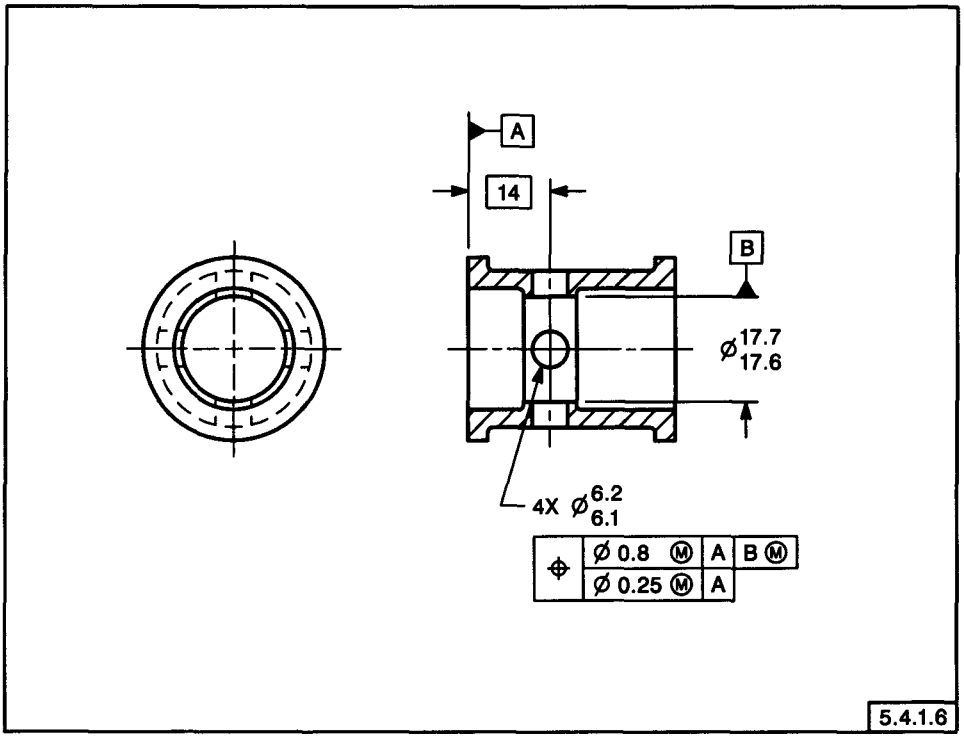

FIG. 5-24 RADIAL HOLE PATTERN LOCATED BY COMPOSITE POSITIONAL TOLERANCING

Copyright ASME International
Provided by IHS under license with ASME
No reproduction or networking permitted without license from IHS
Not for Resale

FIG. 5-24(a) PATTERN-LOCATING TOLERANCE ZONE FRAMEWORK

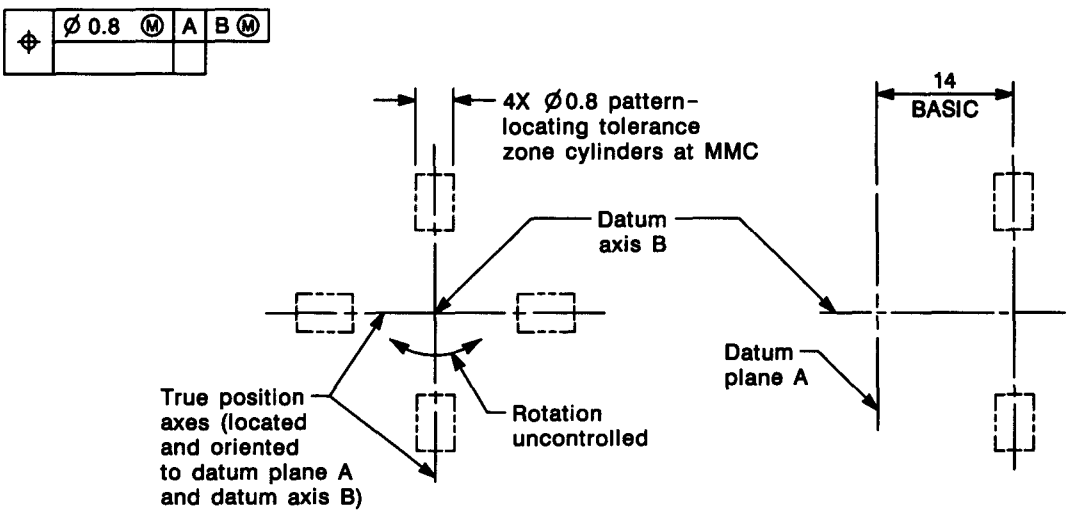

Applicability of tolerance zones specified in the upper entry of the composite feature control frame.

FIG. 5-24(b) FEATURE-RELATING TOLERANCE ZONE FRAMEWORK

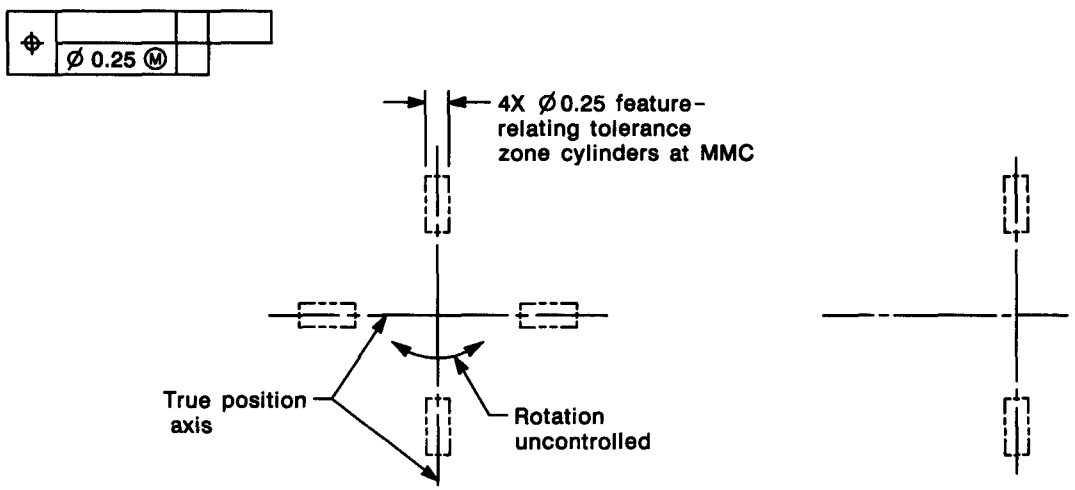

Applicability of tolerance zones specified in the lower entry of the composite feature control frame.

FIG. 5-24 RADIAL HOLE PATTERN LOCATED BY COMPOSITE POSITIONAL TOLERANCING (CONT'D)
Tolerance Zones for Radial Hole Pattern

Copyright ASME International
Provided by IHS under license with ASME
No reproduction or networking permitted without license from IHS
Not for Resale

FIG. 5-24(c)

⌖	Ø 0.8 Ⓜ	A	B Ⓜ
	Ø 0.25 Ⓜ	A	

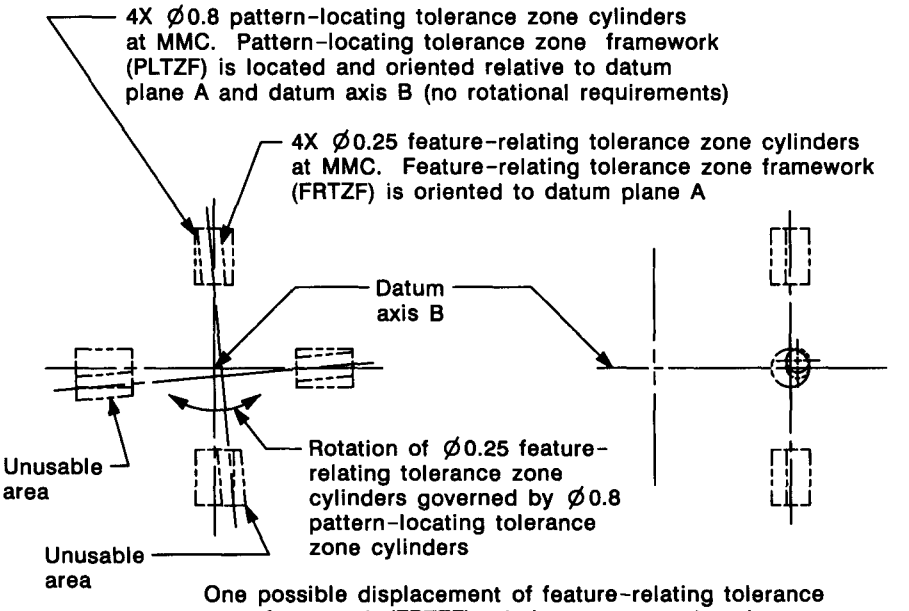

One possible displacement of feature-relating tolerance zone framework (FRTZF) relative to pattern-locating tolerance zone framework (PLTZF).

FIG. 5-24(d)

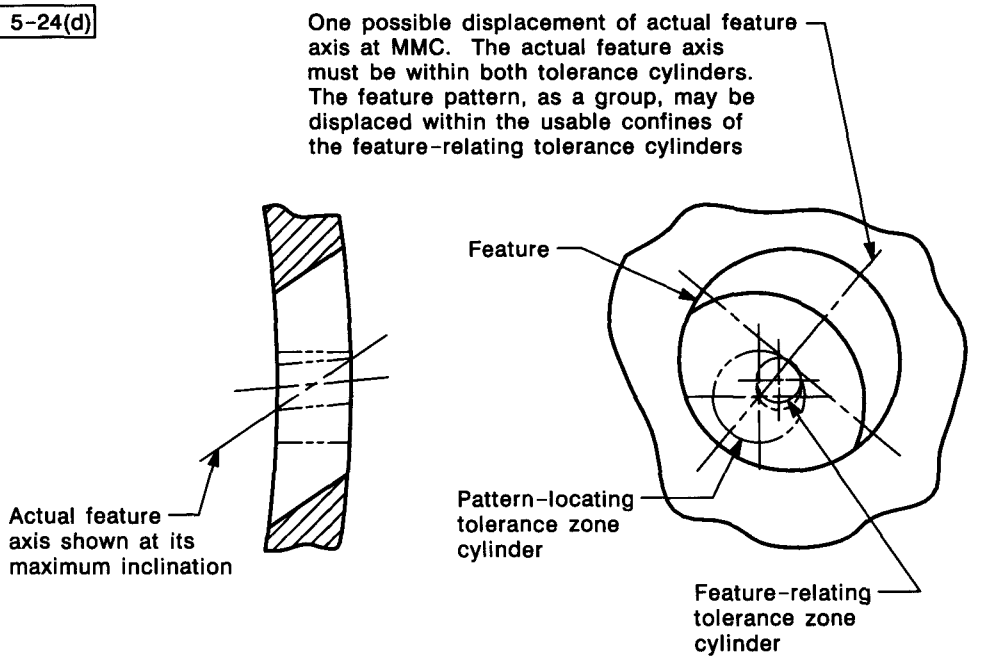

One possible displacement of actual feature pattern (one hole shown).

FIG. 5-24 RADIAL HOLE PATTERN LOCATED BY COMPOSITE POSITIONAL TOLERANCING (CONT'D)
Tolerance Zones for Radial Hole Pattern (Cont'd)

Copyright ASME International
Provided by IHS under license with ASME
No reproduction or networking permitted without license from IHS
Not for Resale

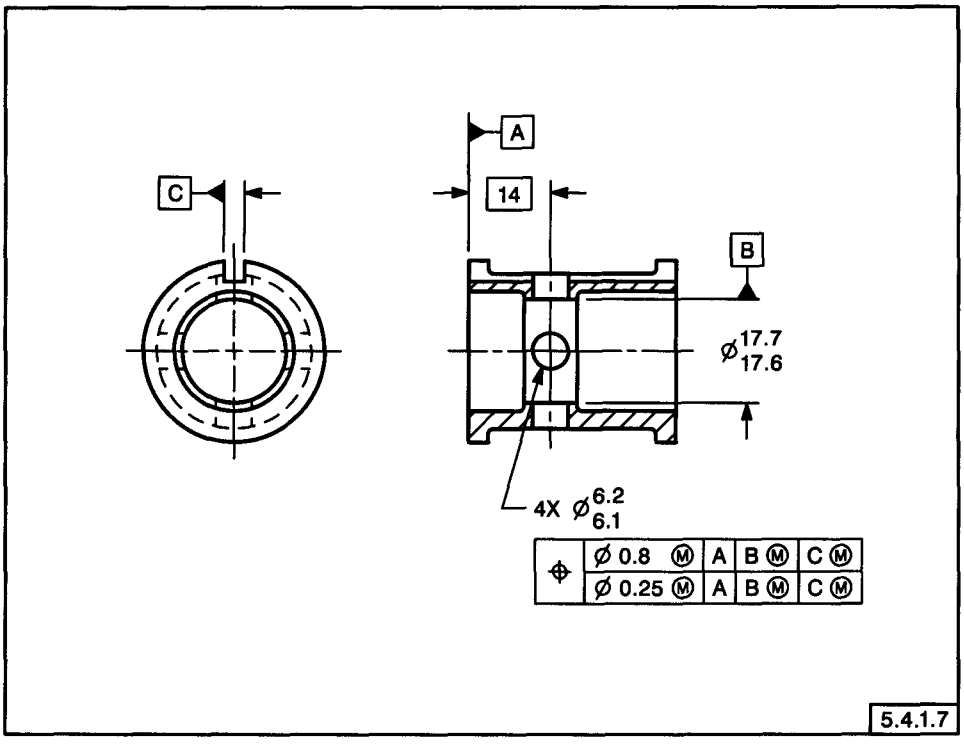

FIG. 5-25 RADIAL HOLE PATTERN LOCATED BY COMPOSITE POSITIONAL TOLERANCING

Copyright ASME International
Provided by IHS under license with ASME
No reproduction or networking permitted without license from IHS
Not for Resale

FIG. 5-25(a) PATTERN-LOCATING TOLERANCE ZONE FRAMEWORK

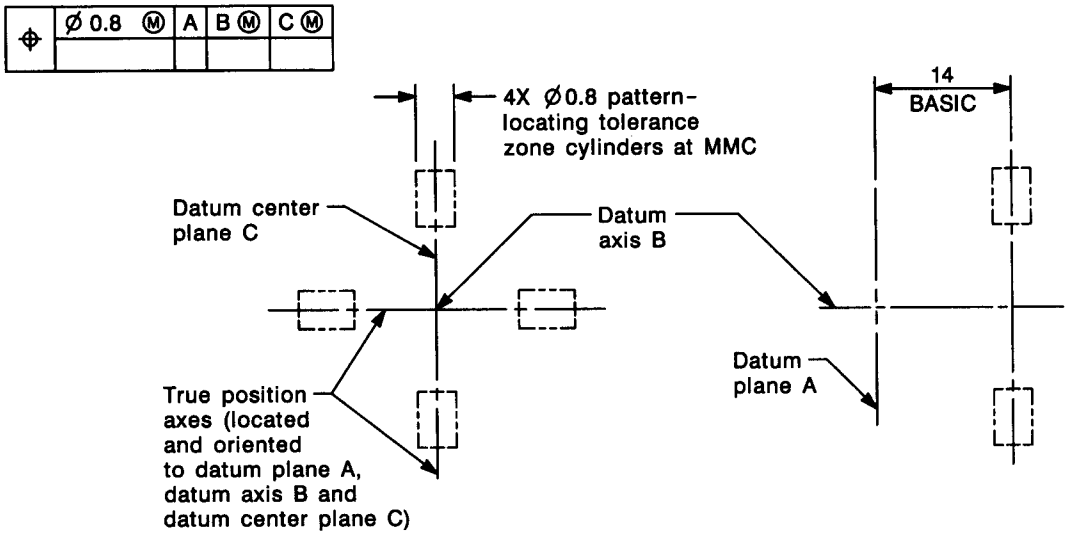

Applicability of tolerance zones specified in the upper entry of the composite feature control frame.

FIG. 5-25(b) FEATURE-RELATING TOLERANCE ZONE FRAMEWORK

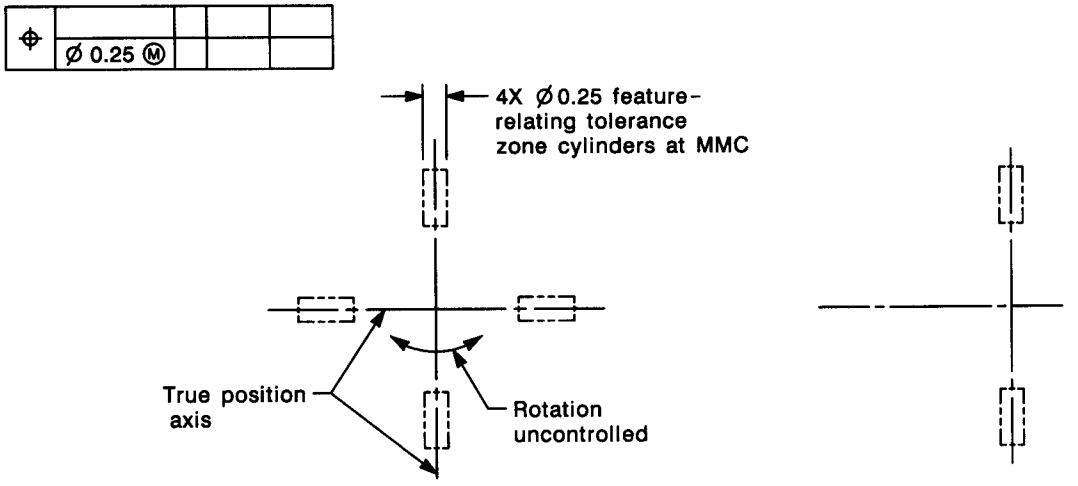

Applicability of tolerance zones specified in the lower entry of the composite feature control frame.

FIG. 5-25 RADIAL HOLE PATTERN LOCATED BY COMPOSITE POSITIONAL TOLERANCING (CONT'D)
Tolerance Zones for Radial Hole Pattern

Copyright ASME International
Provided by IHS under license with ASME
No reproduction or networking permitted without license from IHS Not for Resale

FIG. 5-25(c)

⌖	Ø 0.8 Ⓜ	A	B Ⓜ	C Ⓜ
	Ø 0.25 Ⓜ	A	B Ⓜ	C Ⓜ

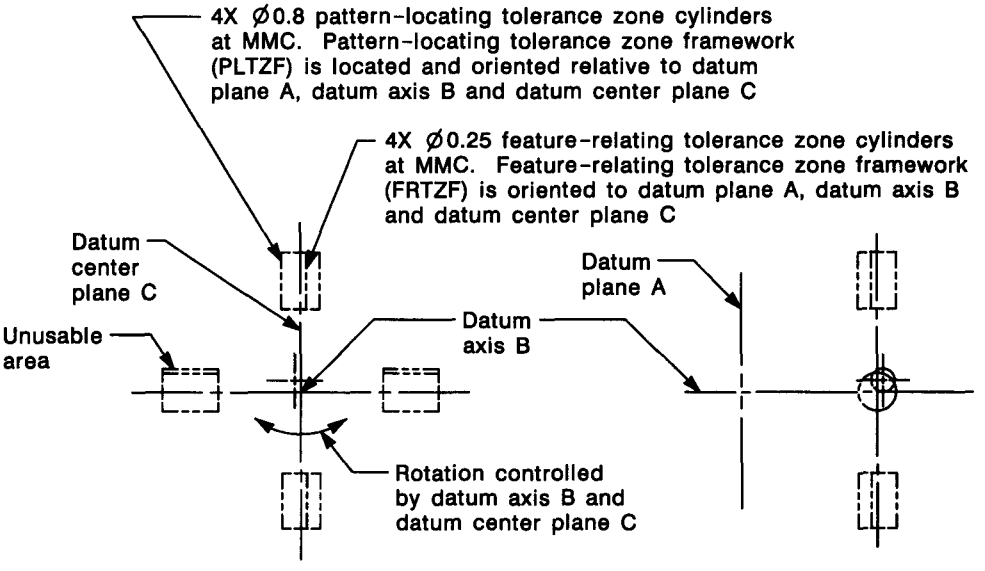

One possible displacement of feature-relating tolerance zone framework (FRTZF) relative to pattern-locating tolerance zone framework (PLTZF).

FIG. 5-25(d)

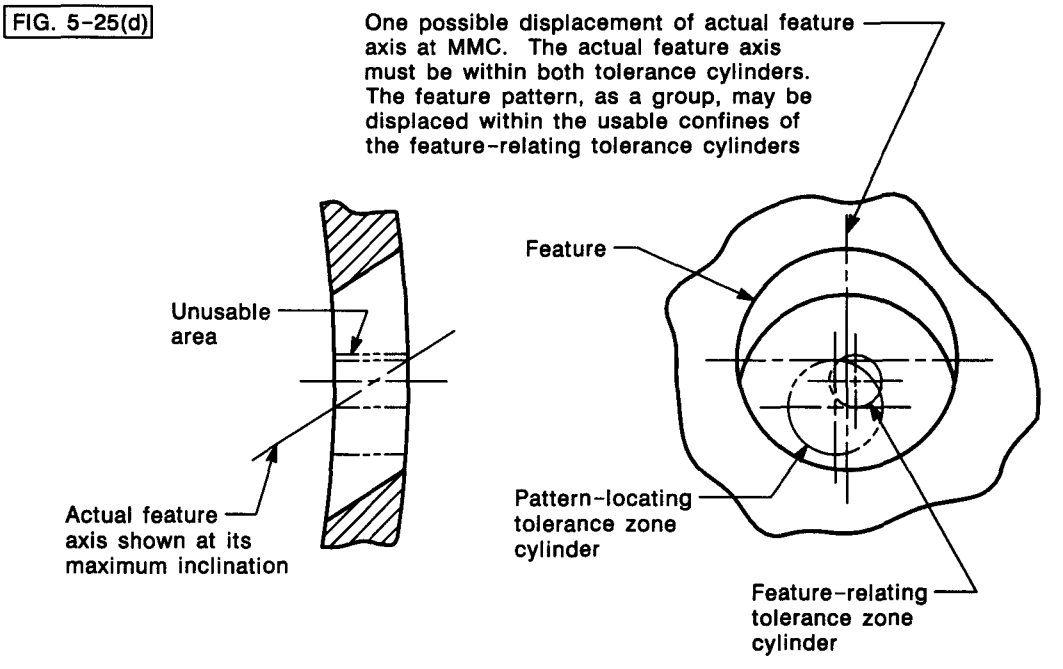

One possible displacement of actual feature pattern (one hole shown).

FIG. 5-25 RADIAL HOLE PATTERN LOCATED BY COMPOSITE POSITIONAL TOLERANCING (CONT'D)
Tolerance Zones for Radial Hole Pattern (Cont'd)

Copyright ASME International
Provided by IHS under license with ASME
No reproduction or networking permitted without license from IHS
Not for Resale

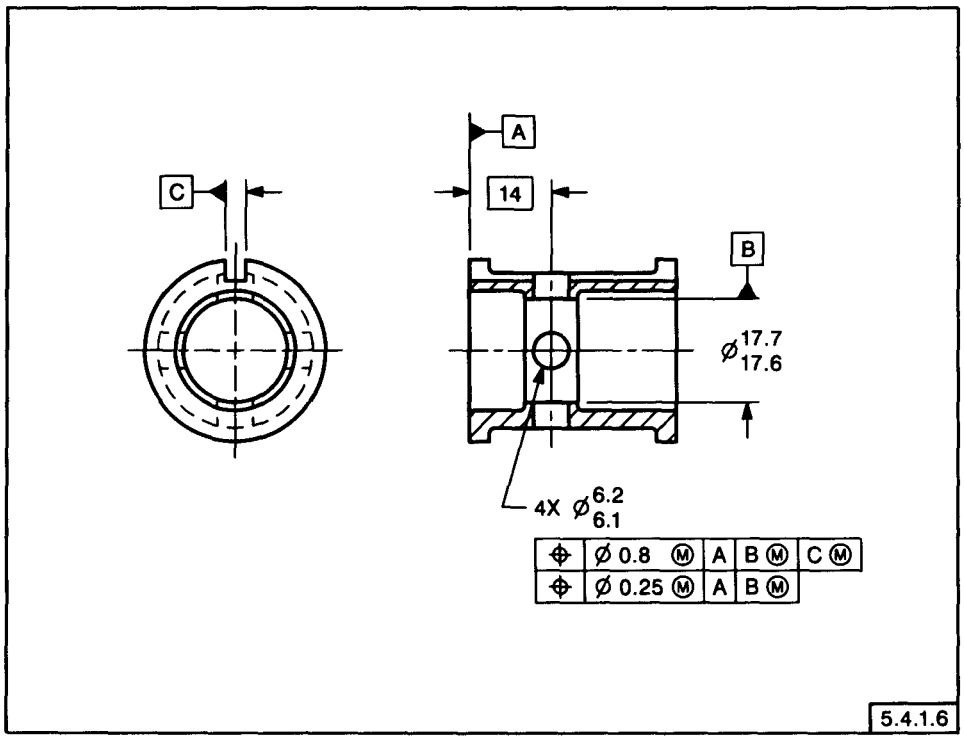

FIG. 5-26 RADIAL HOLE PATTERN LOCATED BY TWO SINGLE-SEGMENT FEATURE CONTROL FRAMES

Copyright ASME International
Provided by IHS under license with ASME
No reproduction or networking permitted without license from IHS
Not for Resale

FIG. 5-26(a)

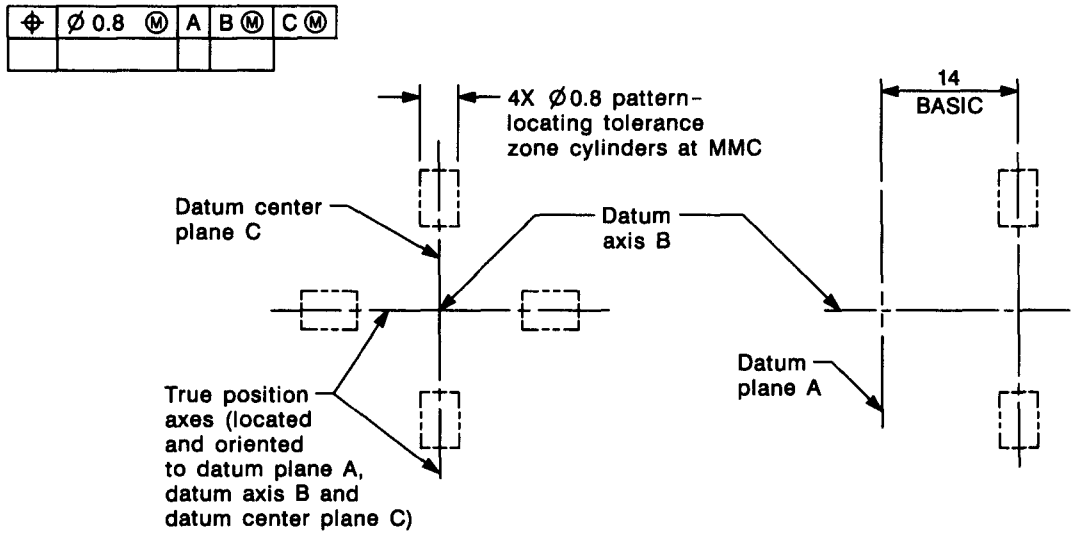

Applicability of tolerance zones specified in the upper entry of the single segment feature control frame.

FIG. 5-26(b)

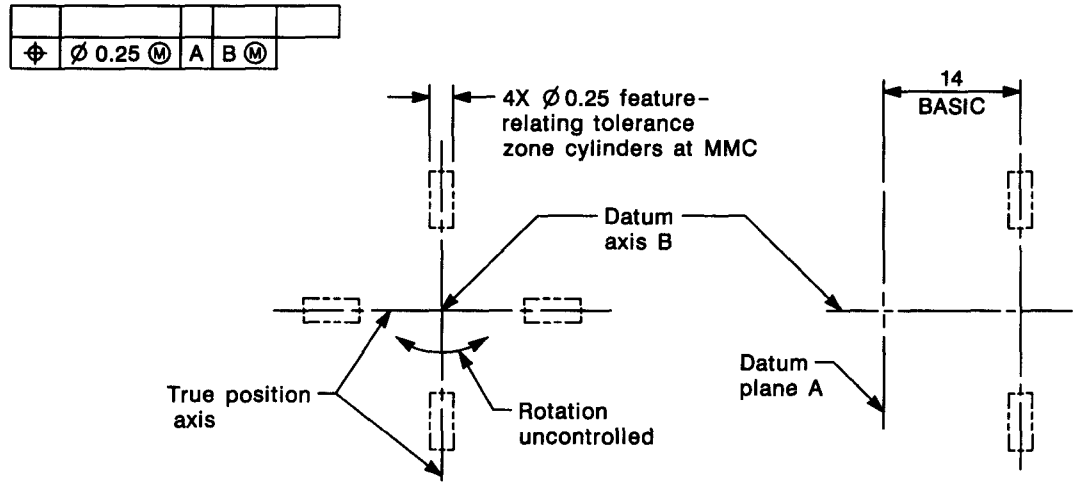

Applicability of tolerance zones specified in the lower entry of the single segment feature control frame.

FIG. 5-26 RADIAL HOLE PATTERN LOCATED BY TWO SINGLE-SEGMENT FEATURE CONTROL FRAMES (CONT'D)
Tolerance Zones for Radial Hole Pattern

Copyright ASME International
Provided by IHS under license with ASME
No reproduction or networking permitted without license from IHS
Not for Resale

FIG. 5-26(c)

⌖	Ø 0.8 Ⓜ	A	B Ⓜ	C Ⓜ
⌖	Ø 0.25 Ⓜ	A	B Ⓜ	

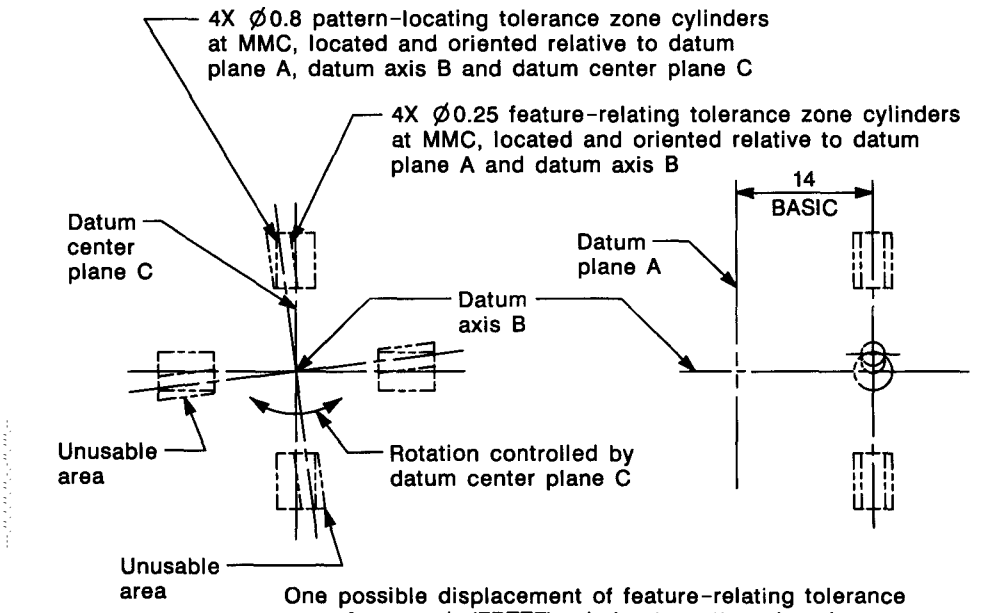

One possible displacement of feature-relating tolerance zone framework (FRTZF) relative to pattern-locating tolerance zone framework (PLTZF).

FIG. 5-26(d)

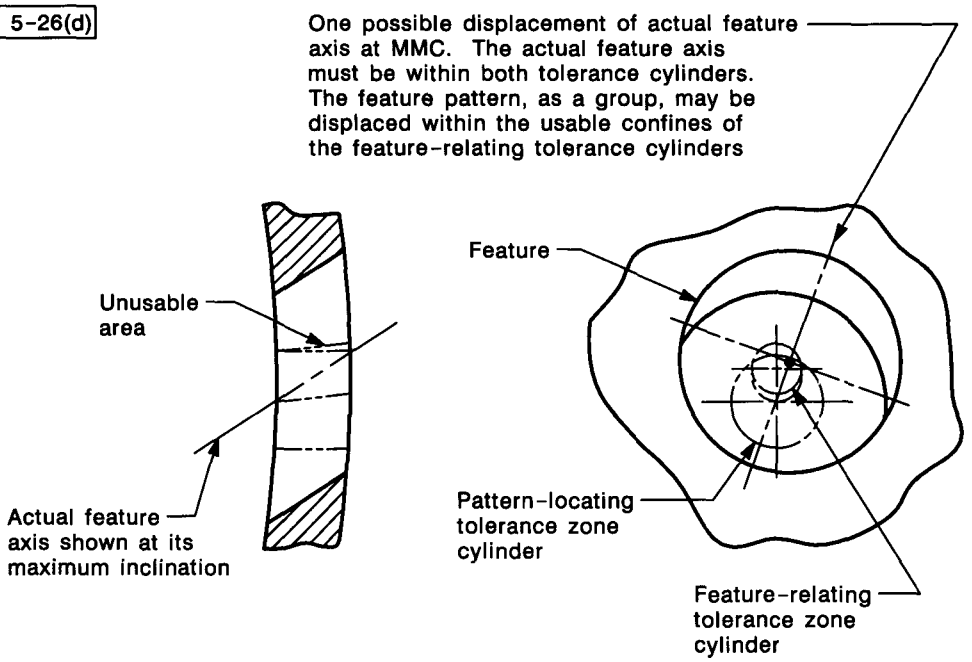

One possible displacement of actual feature pattern (one hole shown).

FIG. 5-26 RADIAL HOLE PATTERN LOCATED BY TWO SINGLE-SEGMENT FEATURE CONTROL FRAMES (CONT'D)
Tolerance Zones for Radial Hole Pattern (Cont'd)

Copyright ASME International
Provided by IHS under license with ASME
No reproduction or networking permitted without license from IHS
Not for Resale

THIS ON THE DRAWING

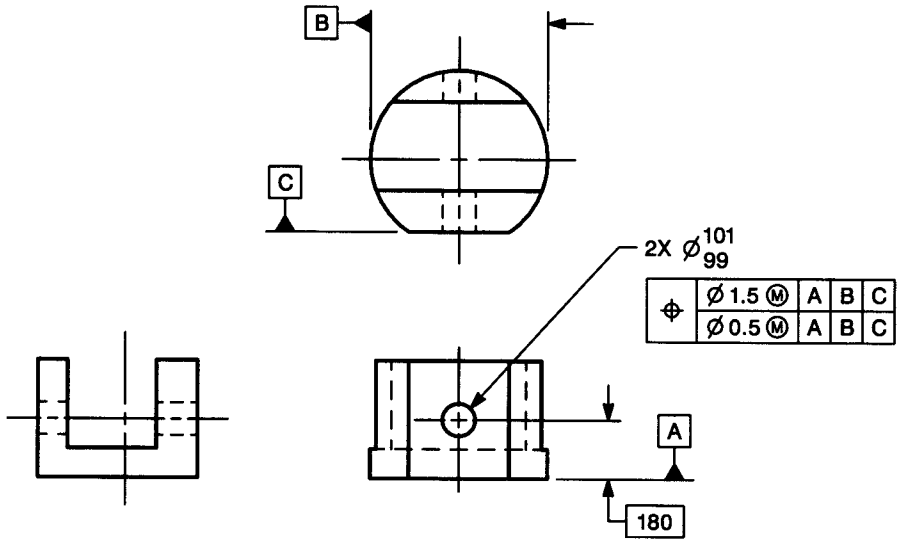

5.4.1.7

MEANS THIS

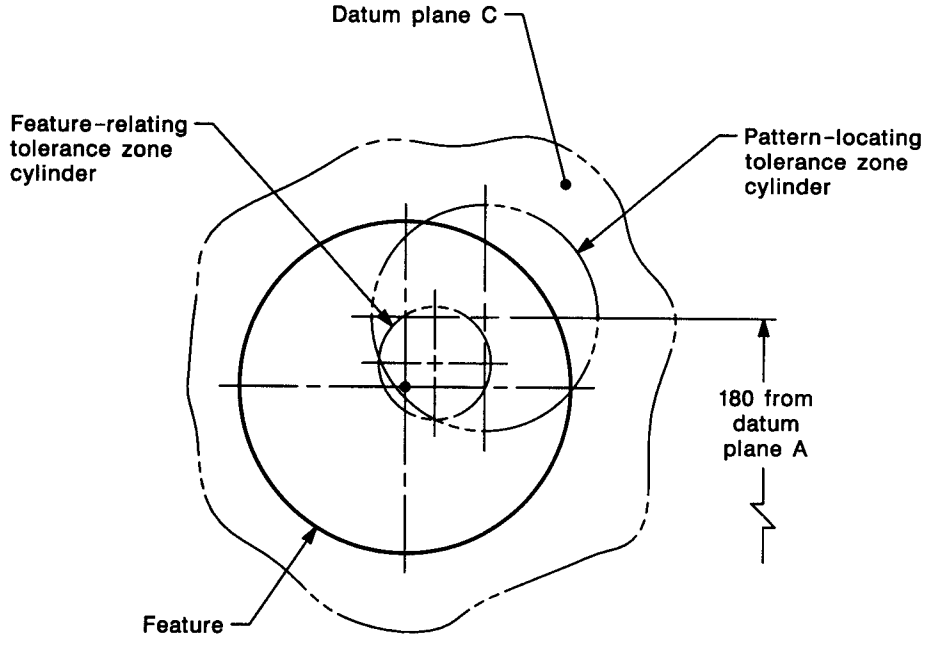

One possible displacement of the actual feature.

FIG. 5-27 ORIENTATION RELATIVE TO THREE DATUM PLANES

Copyright ASME International
Provided by IHS under license with ASME
No reproduction or networking permitted without license from IHS Not for Resale

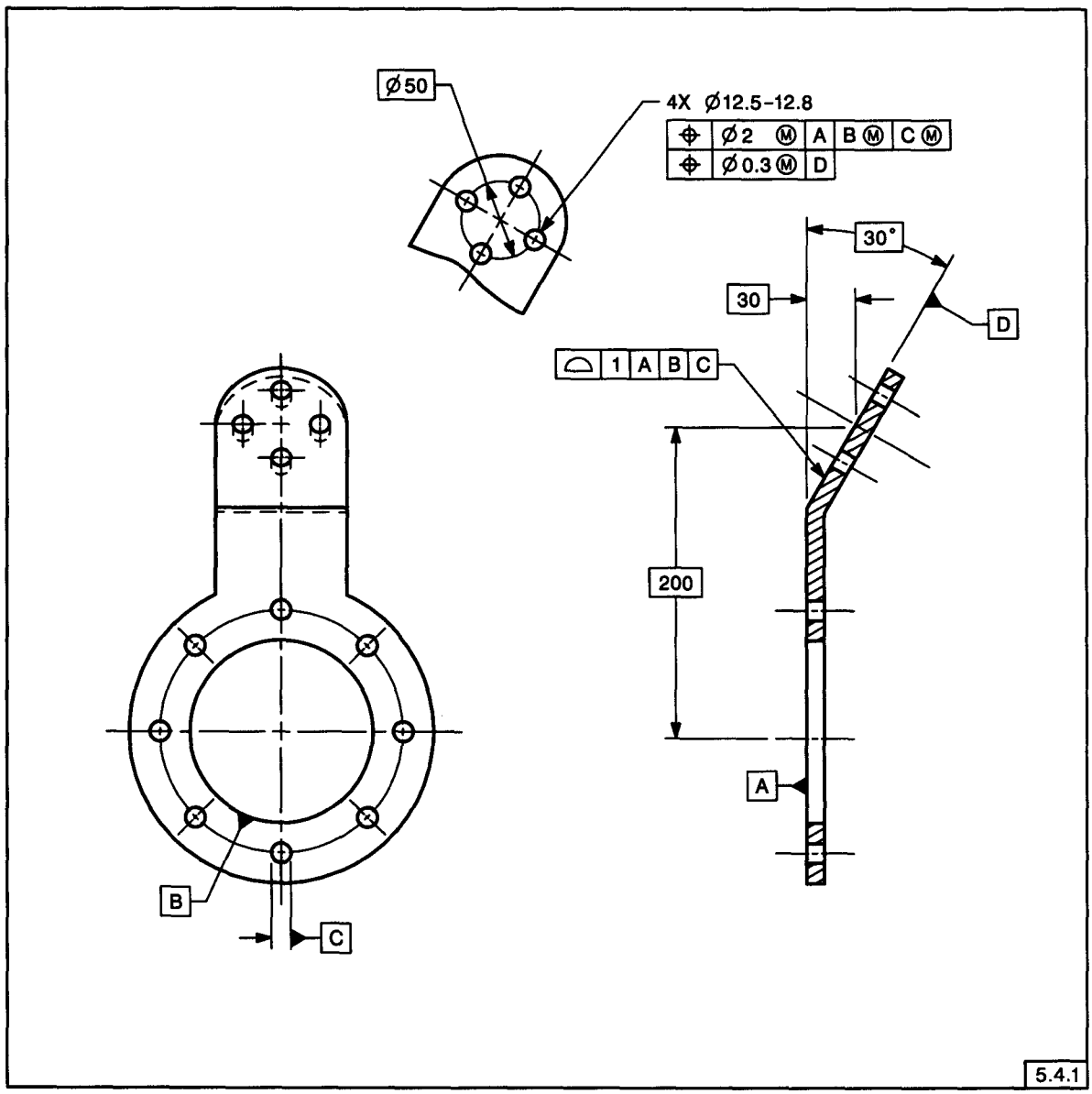

FIG. 5-28 MULTIPLE POSITIONAL TOLERANCING FOR A PATTERN OF FEATURES

Copyright ASME International
Provided by IHS under license with ASME
No reproduction or networking permitted without license from IHS
Not for Resale

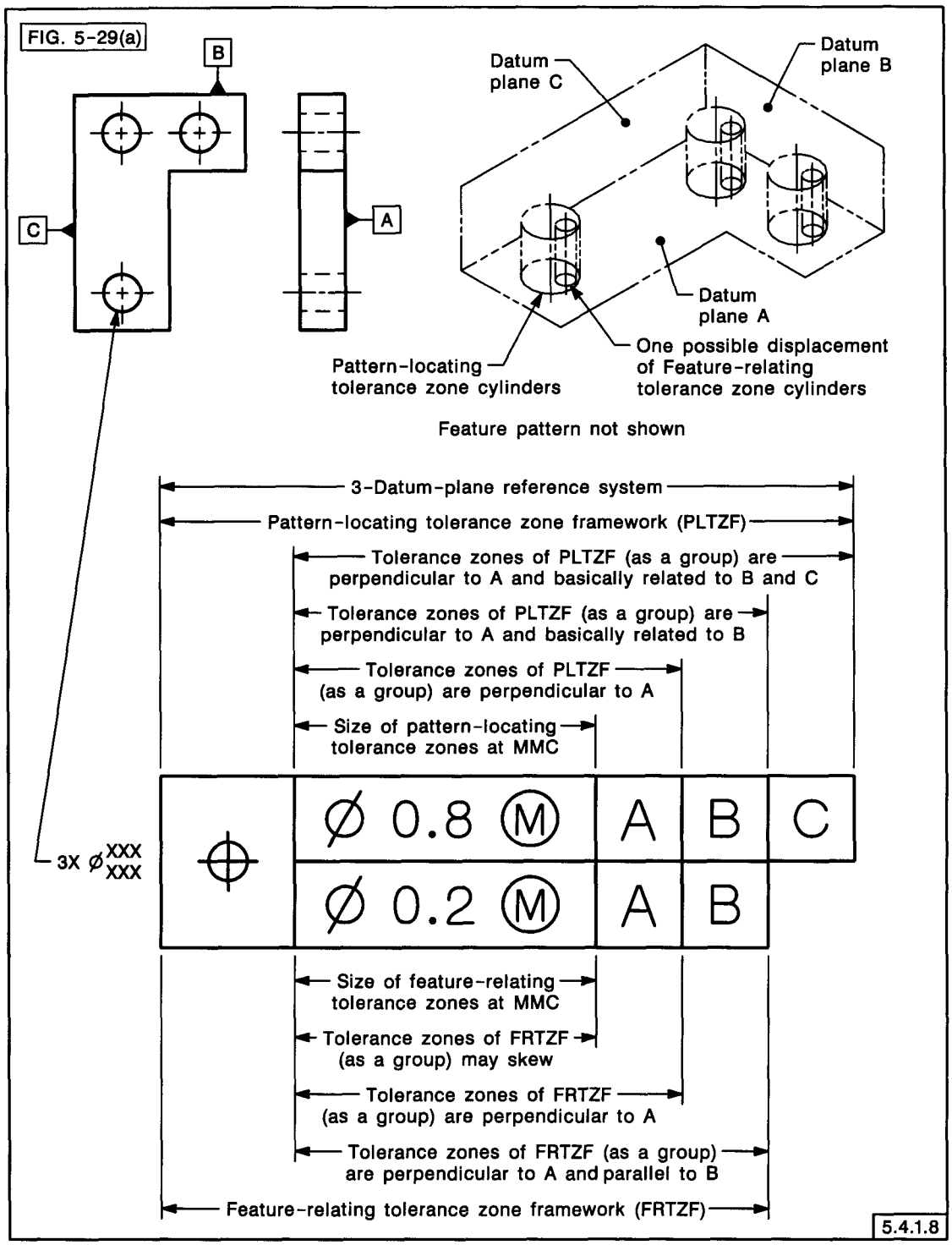

FIG. 5-29 RELATIONSHIPS OF FEATURE-RELATING TOLERANCE ZONE FRAMEWORK (FRTZF) TO PATTERN-LOCATING TOLERANCE ZONE FRAMEWORK (PLTZF)

Copyright ASME International
Provided by IHS under license with ASME
No reproduction or networking permitted without license from IHS
Not for Resale

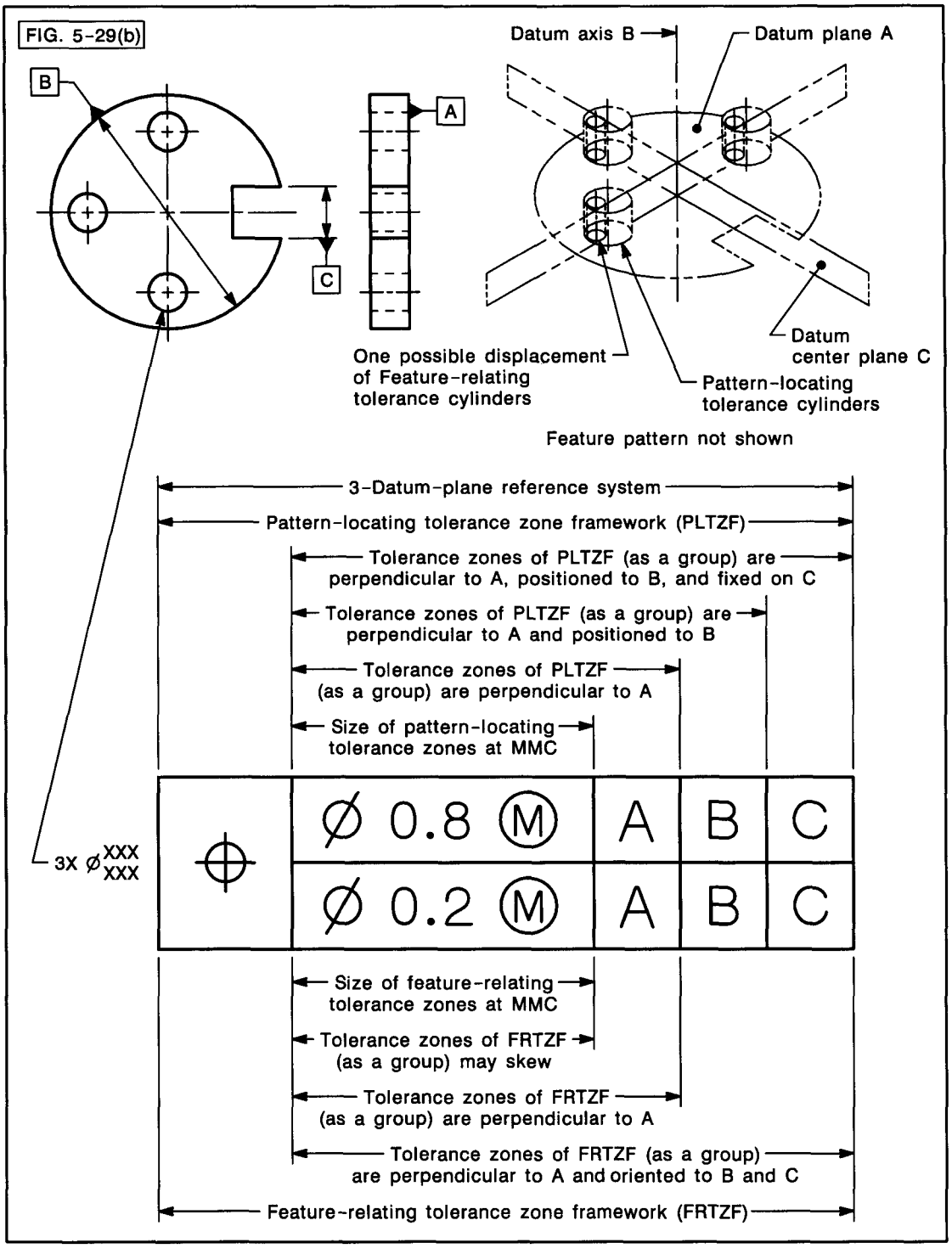

FIG. 5-29 RELATIONSHIPS OF FEATURE-RELATING TOLERANCE ZONE FRAMEWORK (FRTZF) TO PATTERN-LOCATING TOLERANCE ZONE FRAMEWORK (PLTZF) (CONT'D)

Copyright ASME International
Provided by IHS under license with ASME
No reproduction or networking permitted without license from IHS
Not for Resale

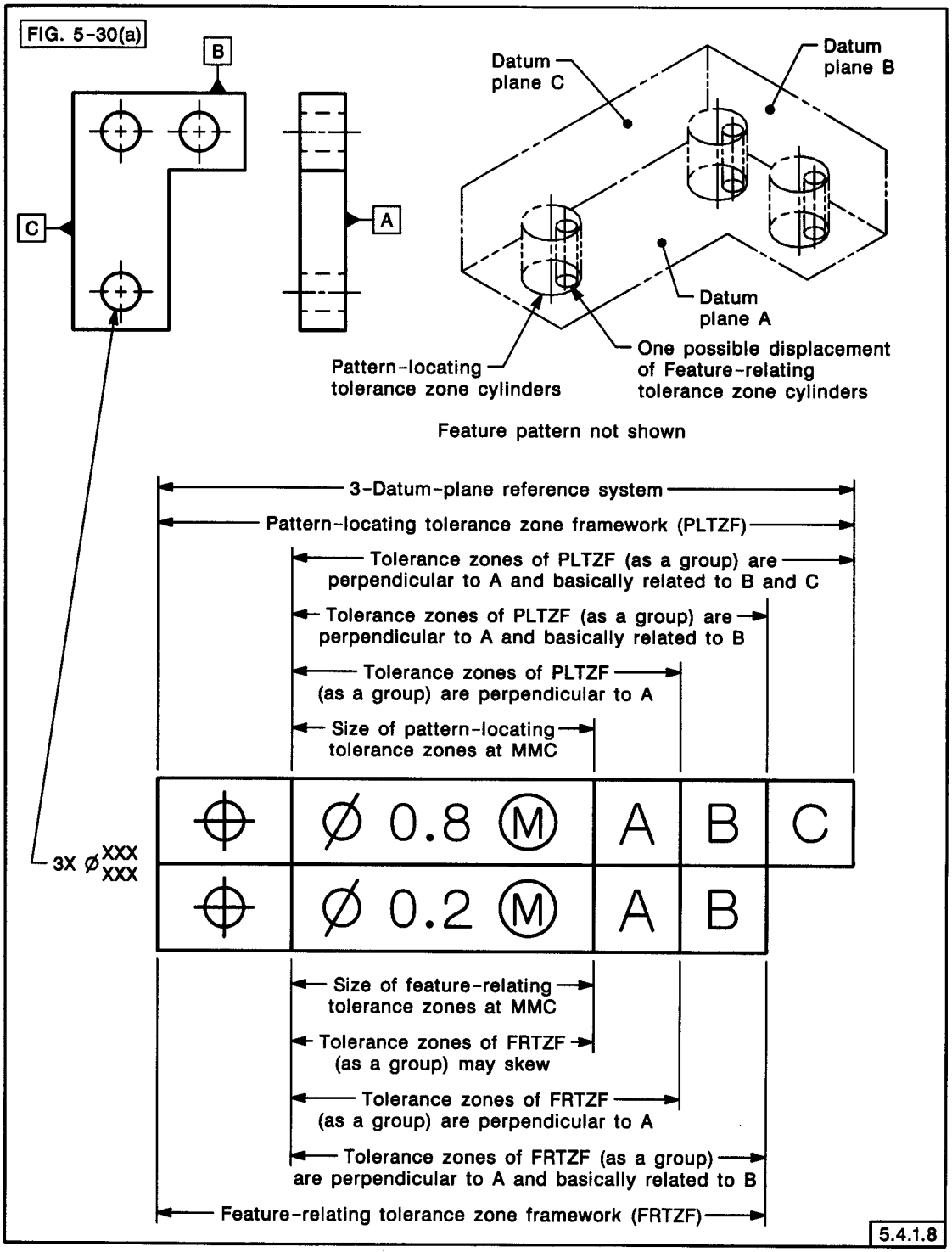

FIG. 5-30 RELATIONSHIPS OF FEATURE-RELATING TOLERANCE ZONE FRAMEWORK (FRTZF) TO PATTERN-LOCATING TOLERANCE ZONE FRAMEWORK (PLTZF)

Copyright ASME International
Provided by IHS under license with ASME
No reproduction or networking permitted without license from IHS
Not for Resale

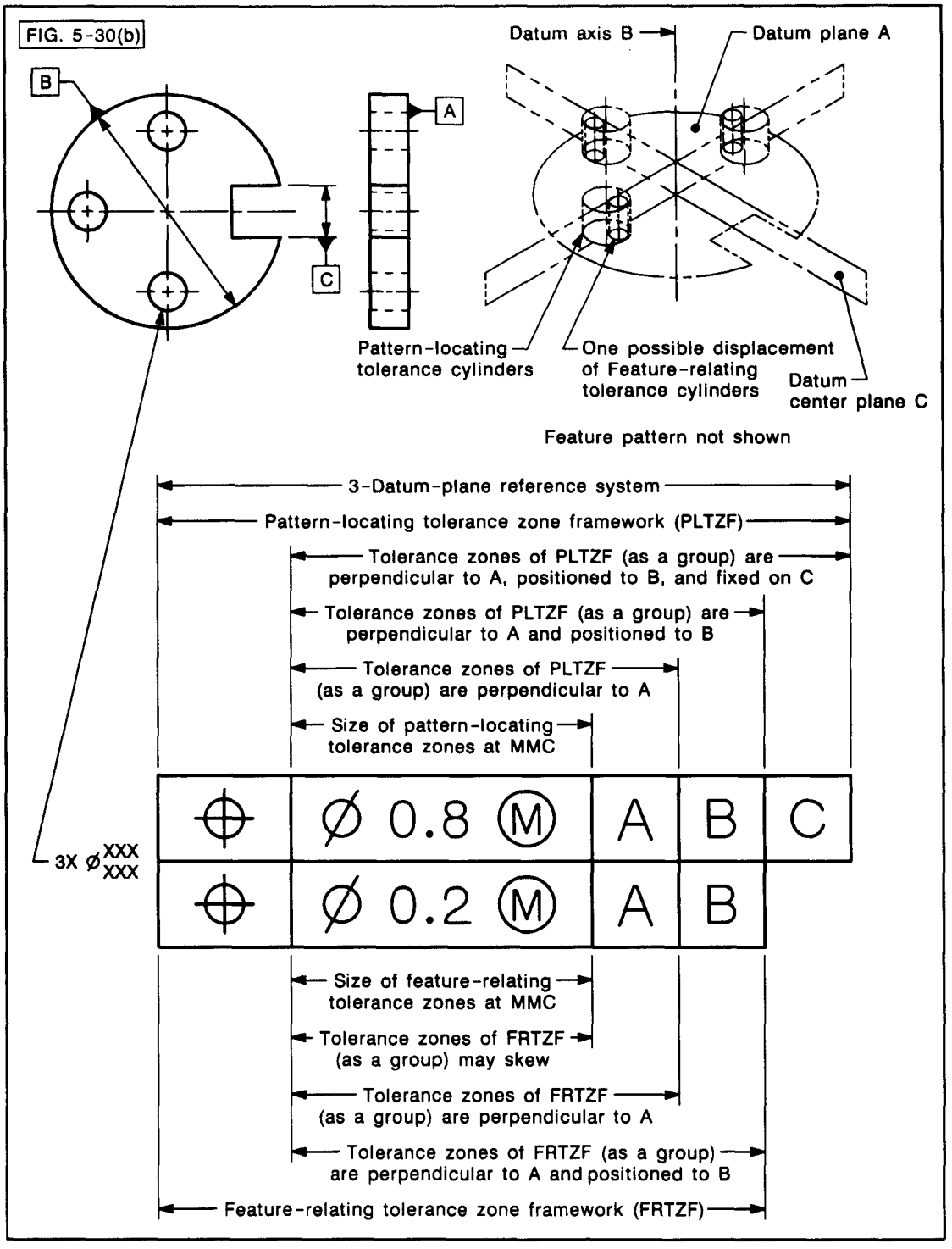

FIG. 5-30 RELATIONSHIPS OF FEATURE-RELATING TOLERANCE ZONE FRAMEWORK (FRTZF) TO PATTERN-LOCATING TOLERANCE ZONE FRAMEWORK (PLTZF) (CONT'D)

Copyright ASME International
Provided by IHS under license with ASME
No reproduction or networking permitted without license from IHS
Not for Resale

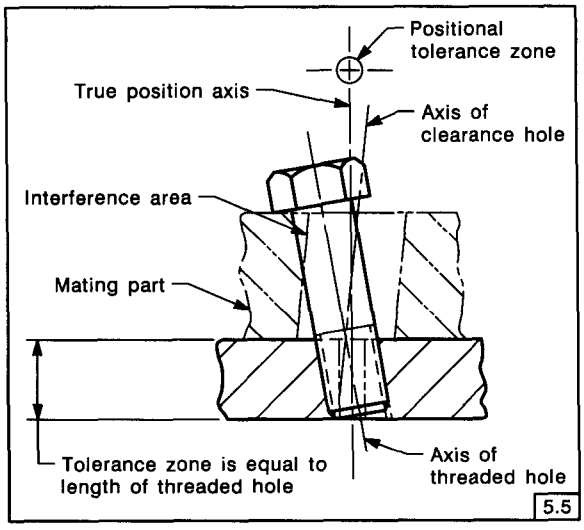

FIG. 5-31 INTERFERENCE DIAGRAM, FASTENER AND HOLE

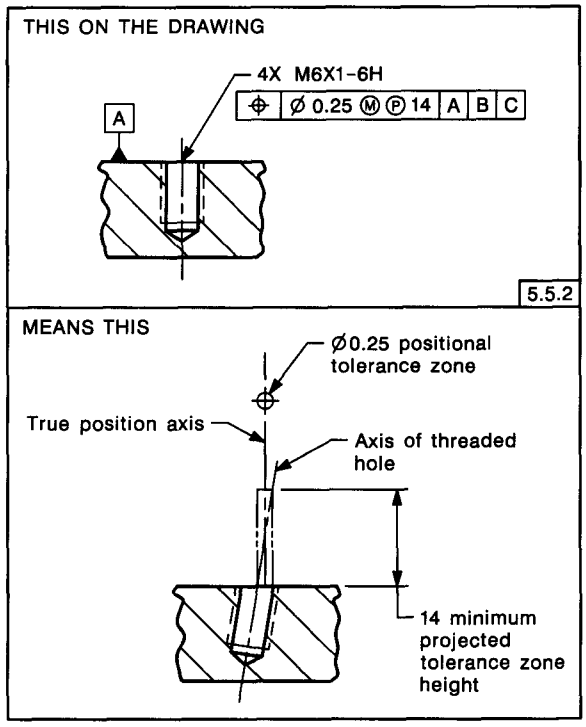

FIG. 5-33 PROJECTED TOLERANCE ZONE SPECIFIED

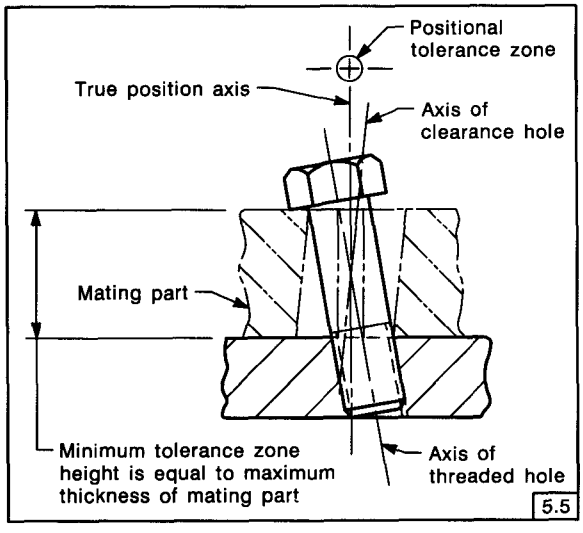

FIG. 5-32 BASIS FOR PROJECTED TOLERANCE ZONE

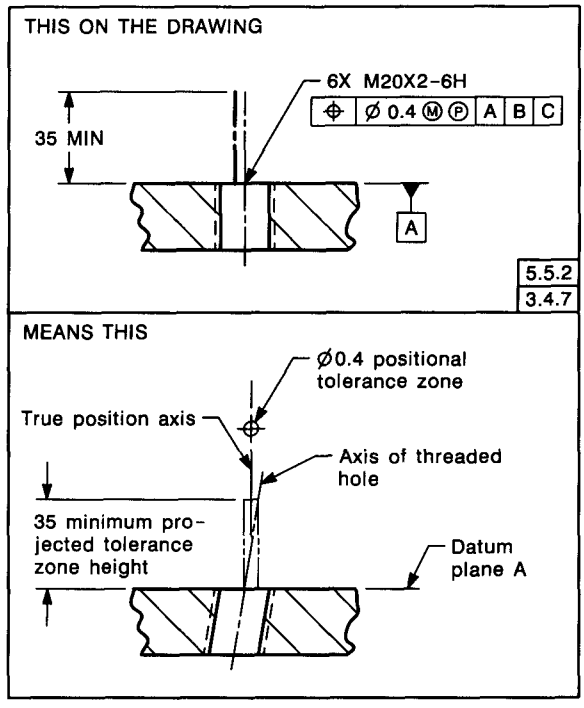

FIG. 5-34 PROJECTED TOLERANCE ZONE INDICATED WITH CHAIN LINE

Copyright ASME International
Provided by IHS under license with ASME
No reproduction or networking permitted without license from IHS
Not for Resale

ment of clearance holes to provide for an extreme variation in perpendicularity of the fastener is not necessary.

5.5.2 Application. Figures 5-33 and 5-34 illustrate the application of a positional tolerance using a projected tolerance zone. The specified value for the projected tolerance zone is a minimum and represents the maximum permissible mating part thickness, or the maximum installed length or height of the components, such as screws, studs, or dowel pins. See para. 5.5.3. The direction and height of the projected tolerance zone are indicated as illustrated. The minimum extent and direction of the projected tolerance zone are shown in a drawing view as a dimensioned value with a heavy chain line drawn closely adjacent to an extension of the center line of the hole.

5.5.3 Stud and Pin Application. Where studs or press-fit pins are located on an assembly drawing, the specified positional tolerance applies only to the height of the projecting portion of the stud or pin after installation, and the specification of a projected tolerance zone is unnecessary. However, a projected tolerance zone is applicable where threaded or plain holes for studs or pins are located on a detail part drawing. In these cases, the specified projected height should equal the maximum permissible height of the stud or pin after installation, not the mating part thickness. See Fig. 5-35.

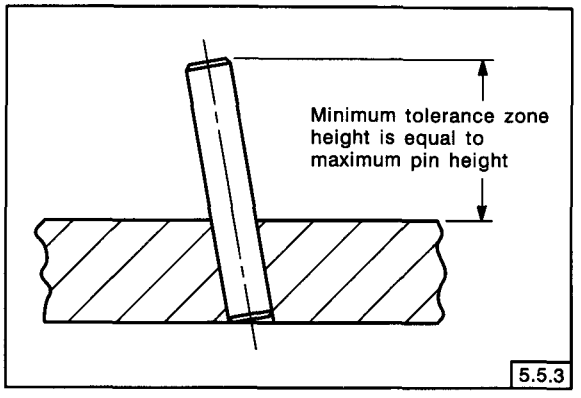

FIG. 5-35 PROJECTED TOLERANCE ZONE APPLIED FOR STUDS OR DOWEL PINS

5.6 NONPARALLEL HOLES

Positional tolerancing lends itself to patterns of holes where axes are not parallel to each other and where axes are not normal to the surface. See Fig. 5-36.

5.7 COUNTERBORED HOLES

Where positional tolerances are used to locate coaxial features, such as counterbored holes, the following practices apply.

(a) Where the same positional tolerance is used to locate both holes and counterbores, a single feature control frame is placed under the callouts specifying hole and counterbore requirements. See Fig. 5-37. Identical diameter tolerance zones for hole and counterbore are coaxially located at true position relative to the specified datums.

(b) Where different positional tolerances are used to locate holes and counterbores (relative to common datum features), two feature control frames are used. One feature control frame is placed under the callout specifying hole requirements and the other under the callout specifying counterbore requirements. See Fig. 5-38. Different diameter tolerance zones for hole and counterbore are coaxially located at true position relative to the specified datums.

(c) Where positional tolerances are used to locate holes and to control individual counterbore-to-hole relationships (relative to different datum features), two feature control frames are used as in (b) above. In addition, a note is placed under the datum feature symbol for the hole and under the feature control frame for the counterbore, indicating the number of places each applies on an individual basis. See Fig. 5-39.

5.8 CLOSER CONTROL AT ONE END OF A FEATURE

Where design permits, different positional tolerances may be specified for the extremities of long holes; this establishes a conical rather than a cylindrical tolerance zone. See Fig. 5-40.

5.9 BIDIRECTIONAL POSITIONAL TOLERANCING OF FEATURES

Where it is desired to specify a greater tolerance in one direction than another, bidirectional positional tolerancing may be applied. Bidirectional positional tolerancing results in a noncylindrical tolerance zone for locating round holes; therefore, the diameter symbol is omitted from the feature control frame in these applications.

Copyright ASME International
Provided by IHS under license with ASME
No reproduction or networking permitted without license from IHS
Not for Resale

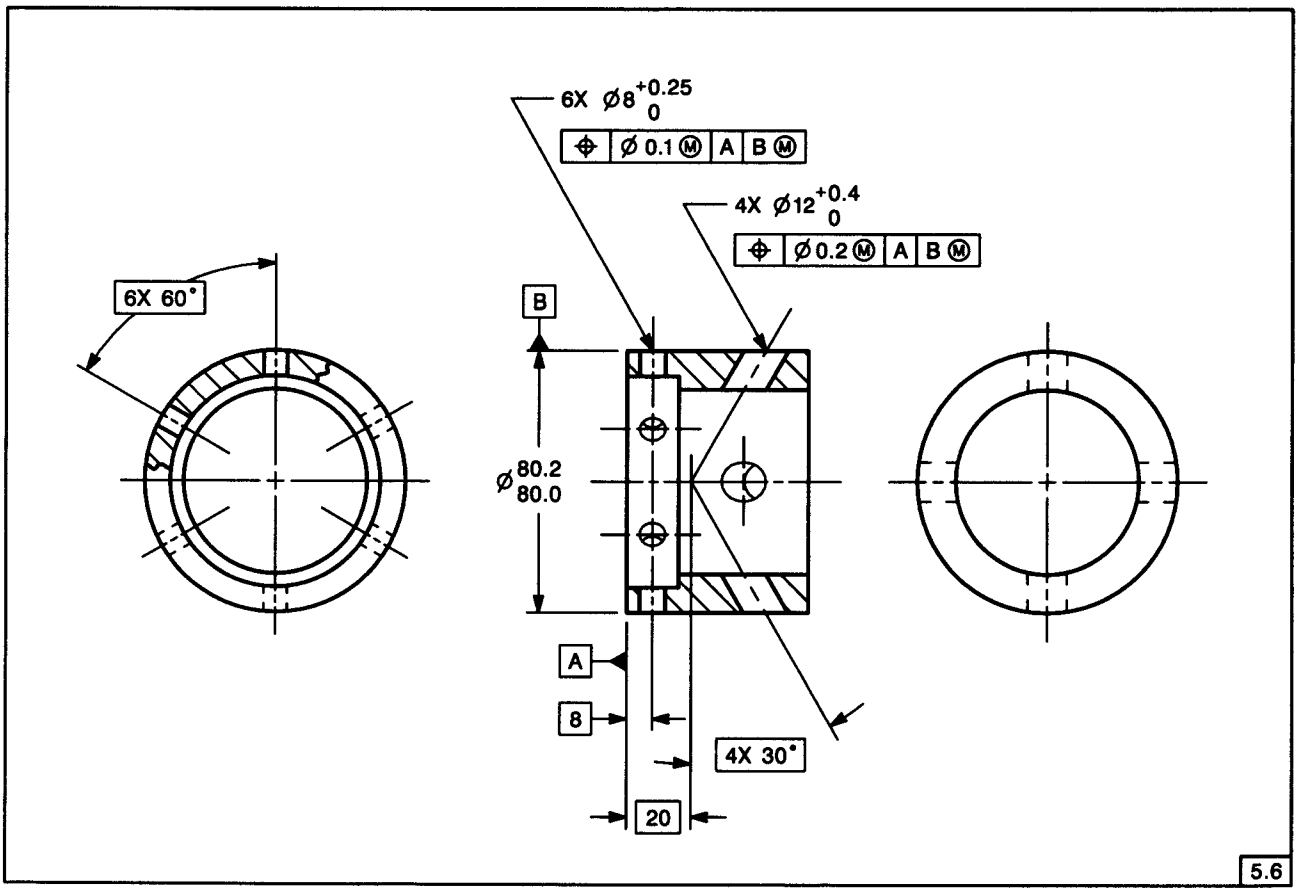

FIG. 5-36 NONPARALLEL HOLES INCLUDING THOSE NOT NORMAL TO SURFACE

Copyright ASME International
Provided by IHS under license with ASME
No reproduction or networking permitted without license from IHS
Not for Resale

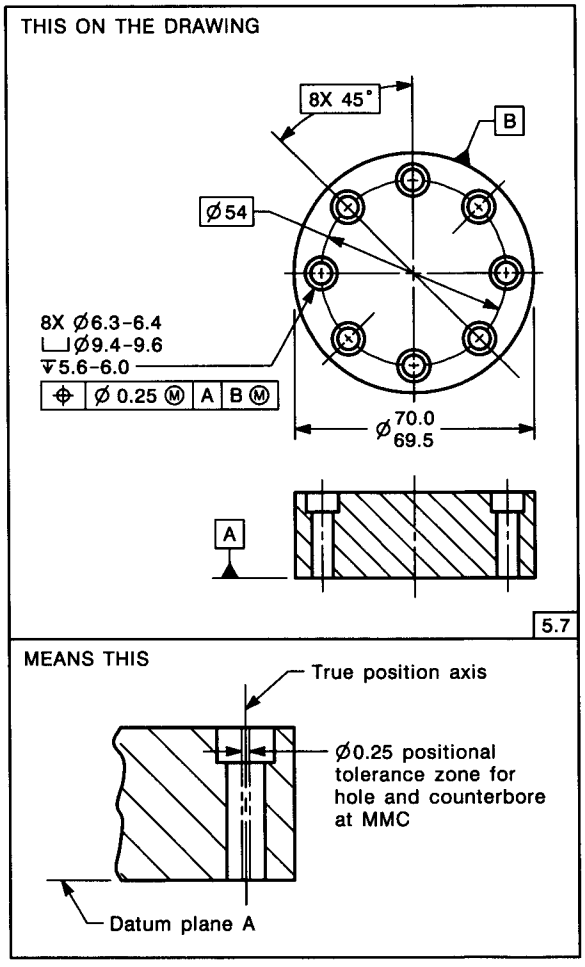

FIG. 5-37 SAME POSITIONAL TOLERANCE FOR HOLES AND COUNTERBORES, SAME DATUM REFERENCES

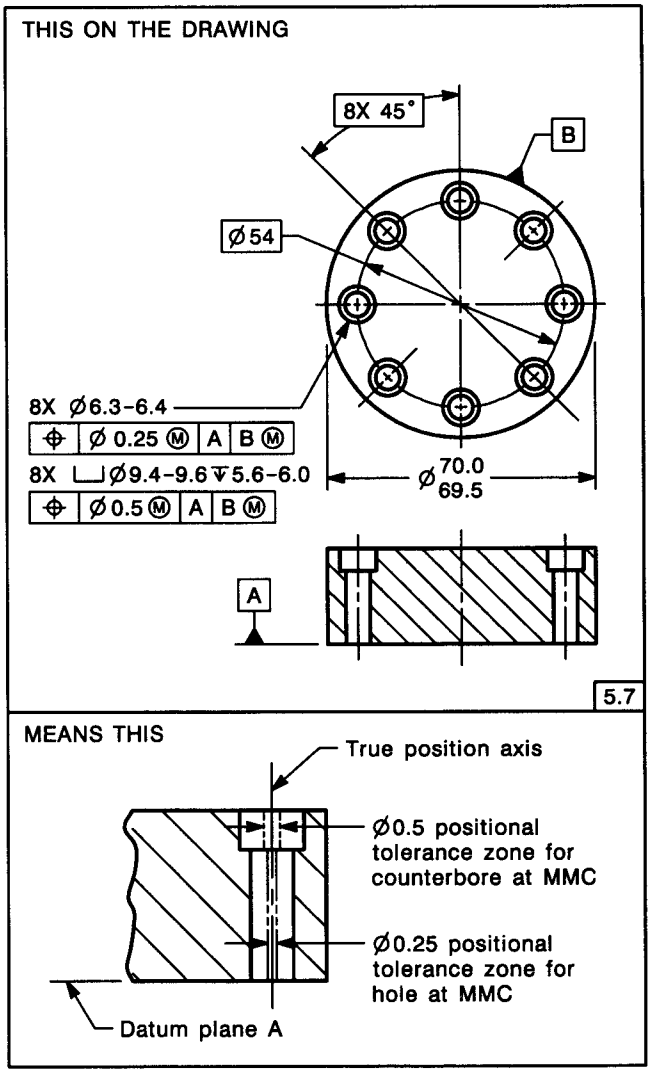

FIG. 5-38 DIFFERENT POSITIONAL TOLERANCES FOR HOLES AND COUNTERBORES, SAME DATUM REFERENCES

Copyright ASME International
Provided by IHS under license with ASME
No reproduction or networking permitted without license from IHS
Not for Resale

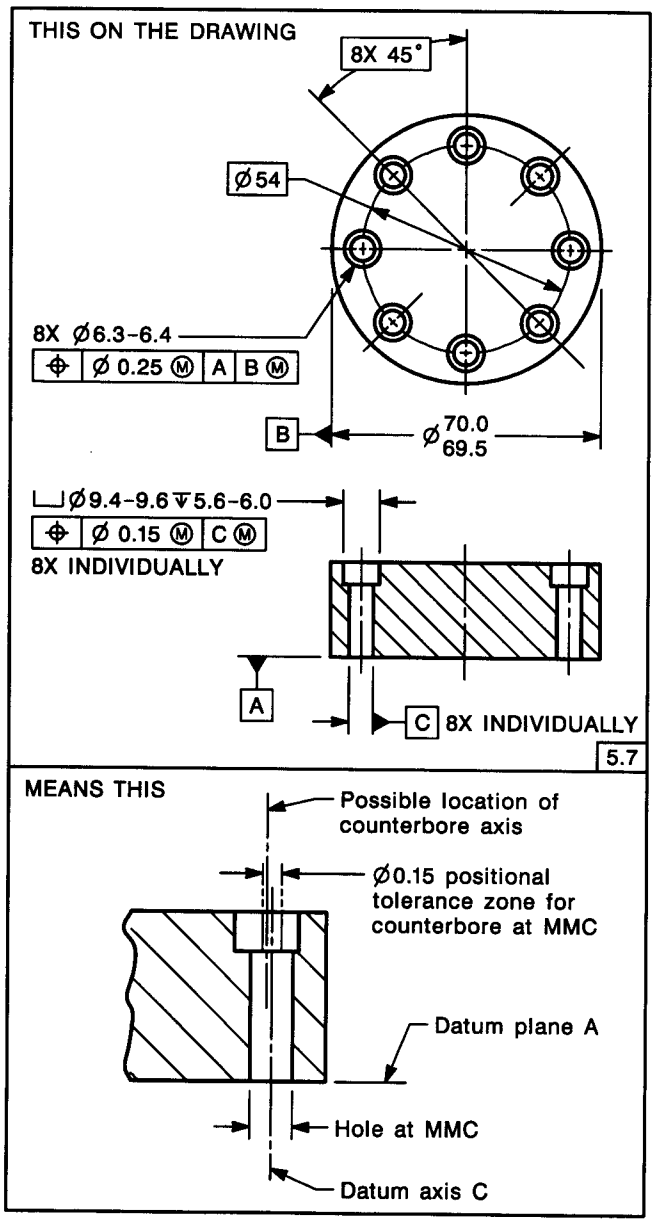

FIG. 5-39 POSITIONAL TOLERANCES FOR HOLES AND COUNTERBORES, DIFFERENT DATUM REFERENCES

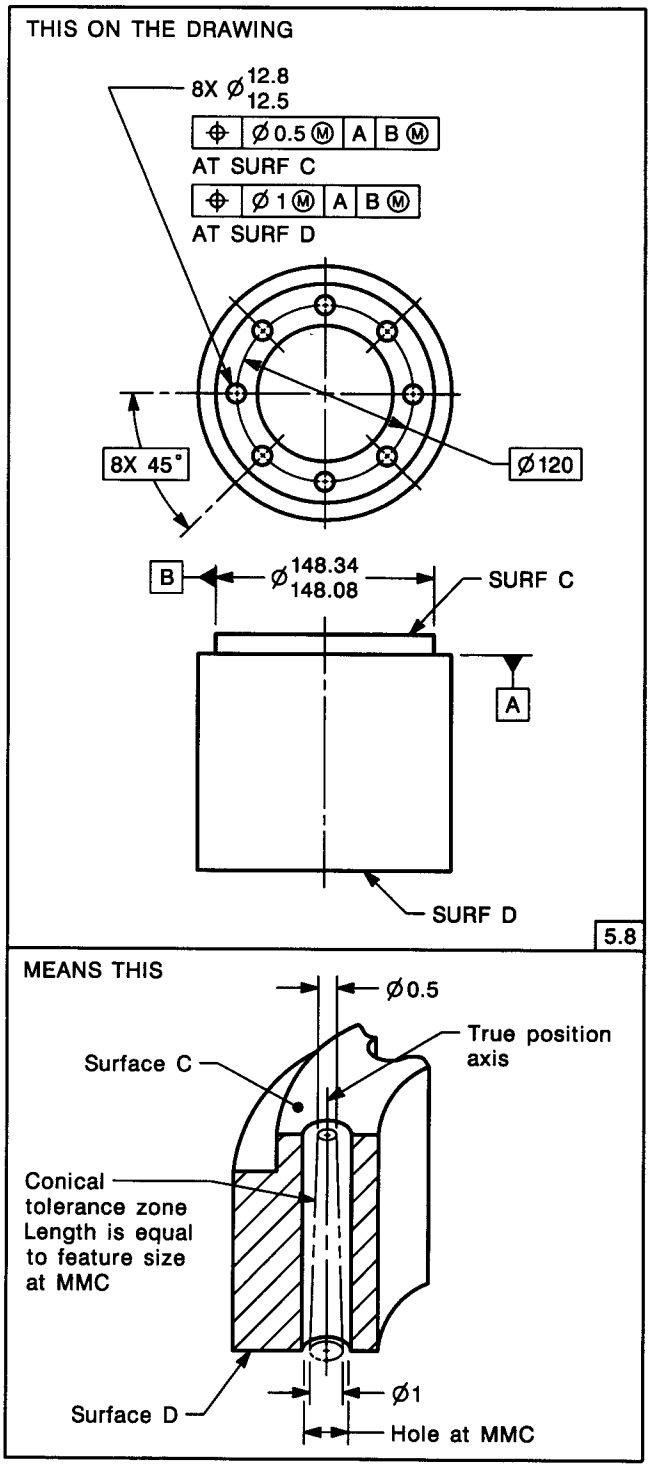

FIG. 5-40 DIFFERENT POSITIONAL TOLERANCE AT EACH END OF LONG HOLE

Copyright ASME International
Provided by IHS under license with ASME
No reproduction or networking permitted without license from IHS
Not for Resale

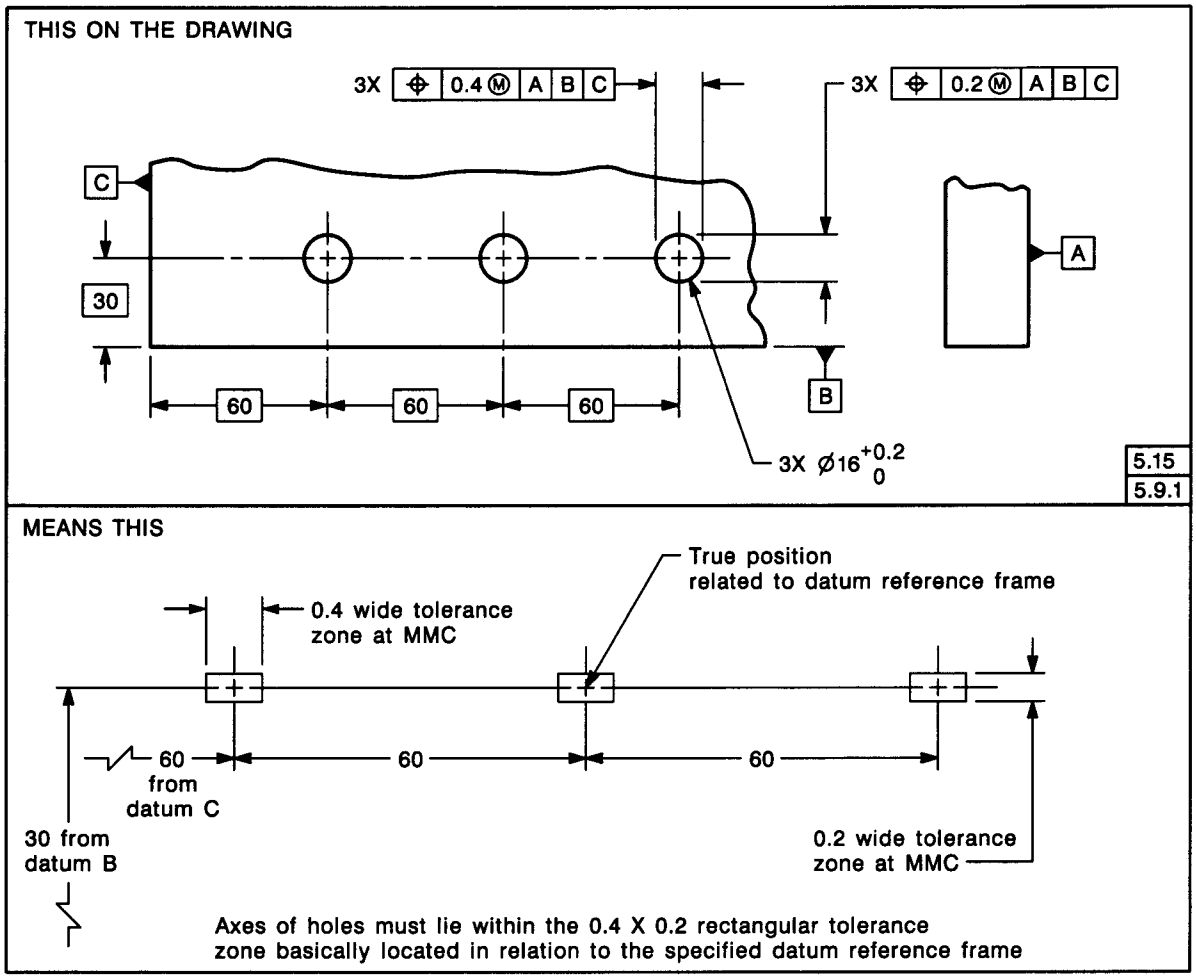

FIG. 5-41 BIDIRECTIONAL POSITIONAL TOLERANCING, RECTANGULAR COORDINATE METHOD

NOTE: A further refinement of perpendicularity within the positional tolerance may be required.

5.9.1 Rectangular Coordinate Method. For holes located by rectangular coordinate dimensions, separate feature control frames are used to indicate the direction and magnitude of each positional tolerance relative to specified datums. See Fig. 5-41. The feature control frames are attached to dimension lines applied in perpendicular directions. Each tolerance value represents a distance between two parallel planes equally disposed about the true position.

5.9.2 Polar Coordinate Method. Bidirectional positional tolerancing is also applied to holes, such as gear-mounting centers located by polar coordinate dimensions relative to specified datums, where a smaller tolerance is desired in the direction of the line-of-centers rather than at right angles to the line-of-centers. See Fig. 5-42. In this application, one dimension line is applied in a radial direction and the other at right angles to the line-of-centers. A further requirement of perpendicularity within the positional tolerance zone has been specified. The positional tolerance values represent distances between two concentric arc boundaries and two parallel planes, respectively, equally disposed about the true position. Coordinate hole-locating dimensions, indicated as reference, may be included on the drawing for manufacturing convenience.

5.10 NONCIRCULAR FEATURES

The fundamental principles of true position dimensioning and positional tolerancing for circular features, such as holes and bosses, apply also to noncircular features, such as open-end slots, tabs, and elongated holes. For such features of size, a positional tolerance is used to locate the center plane established by parallel surfaces of the feature. The tolerance value represents a distance between two parallel planes. The diameter symbol is omitted from the feature control frame. See Figs. 5-43 and 5-44.

Copyright ASME International
Provided by IHS under license with ASME
No reproduction or networking permitted without license from IHS
Not for Resale

THIS ON THE DRAWING

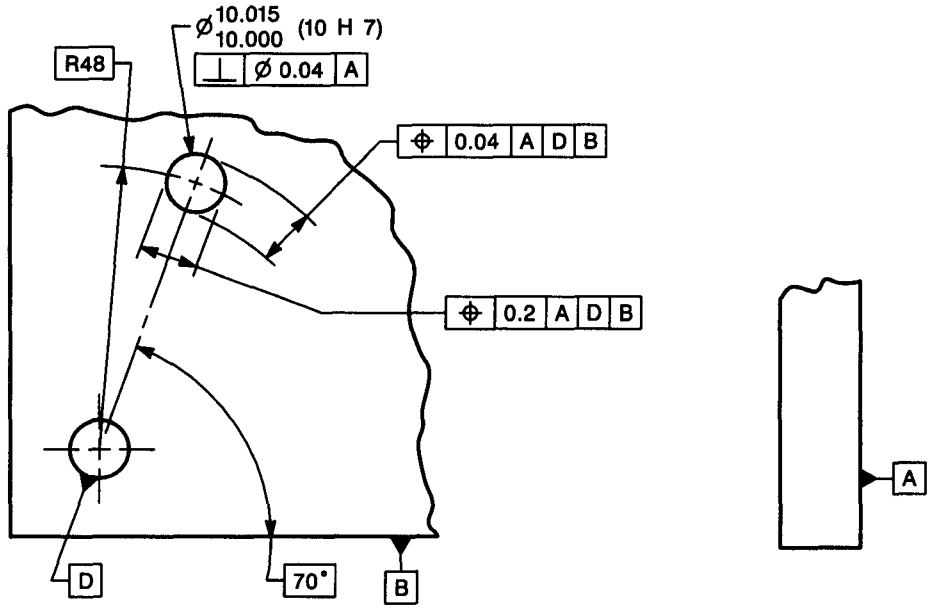

MEANS THIS

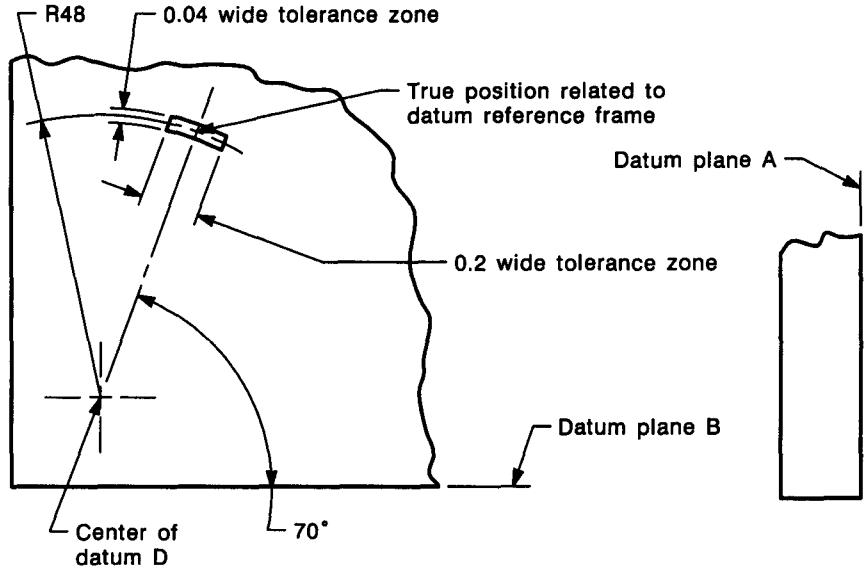

Axis of hole must be perpendicular to datum A as specified, and must totally lie within the segment of a ring-shaped tolerance zone basically located in relation to the specified datum reference frame.

FIG. 5-42 BIDIRECTIONAL POSITIONAL TOLERANCING, POLAR COORDINATE METHOD

Copyright ASME International
Provided by IHS under license with ASME
No reproduction or networking permitted without license from IHS
Not for Resale

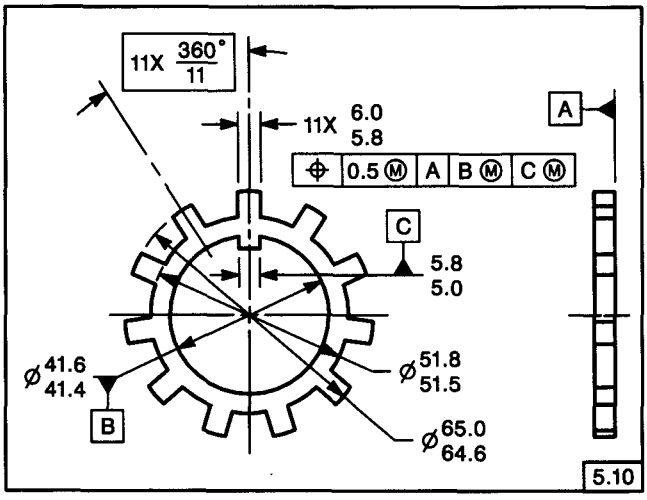

FIG. 5-43 POSITIONAL TOLERANCING OF TABS

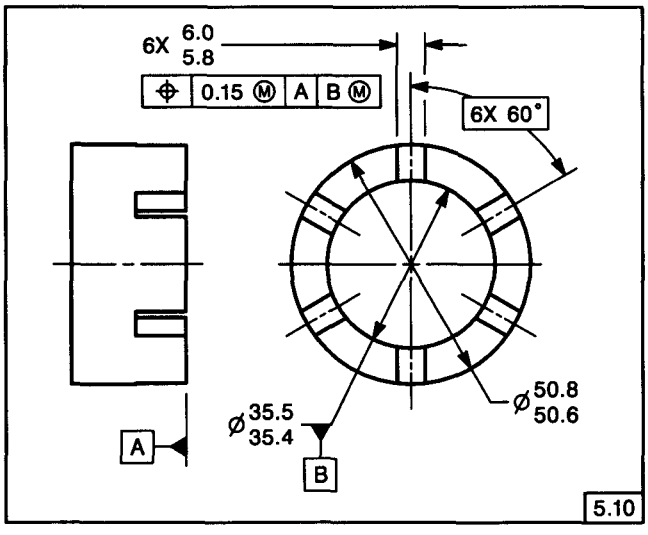

FIG. 5-44 POSITIONAL TOLERANCING OF SLOTS

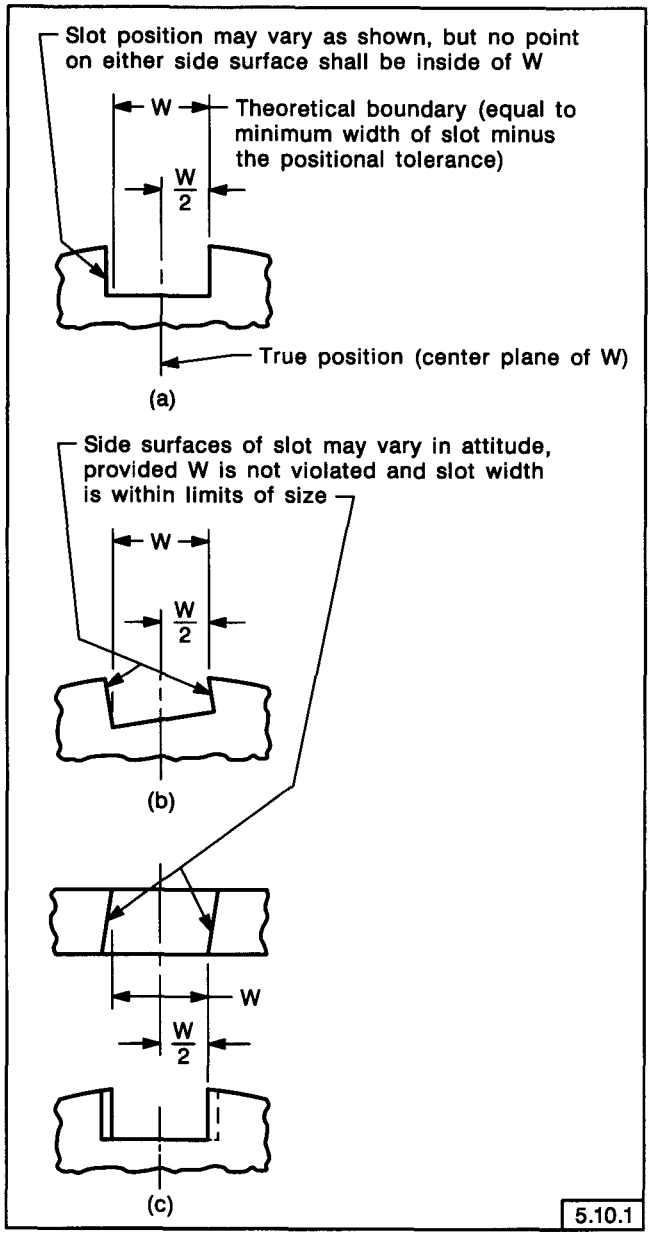

FIG. 5-45 BOUNDARY FOR SURFACES OF SLOT AT MMC

5.10.1 Noncircular Features at MMC. Where a positional tolerance of a noncircular feature applies at MMC, the following apply.

(a) In Terms of the Surfaces of a Feature. While maintaining the specified width limits of the feature, no element of its side surfaces shall be inside a theoretical boundary defined by two parallel planes equally disposed about true position and separated by a distance equal to that shown for W in Fig. 5-45.

(b) In Terms of the Center Plane of a Feature. While maintaining the specified width limits of the feature, its center plane must be within a tolerance zone defined by two parallel planes equally disposed about true position, having a width equal to the positional tolerance. See Fig. 5-46. This tolerance zone also defines the limits within which variations in attitude of the center plane of the feature must be confined.

(c) In Terms of the Boundary for an Elongated Feature. While maintaining the specified size limits of the elongated feature, no element of its surface shall be inside a theoretical boundary of identical shape located at true position. The size of the boundary is equal to the MMC size of the elongated feature minus its positional tolerance. To invoke this concept, the term BOUNDARY is placed beneath the feature control frames. See Fig. 5-47. In this example, a greater positional tolerance is allowed for its length than for its width. Where the same positional

Copyright ASME International
Provided by IHS under license with ASME
No reproduction or networking permitted without license from IHS
Not for Resale

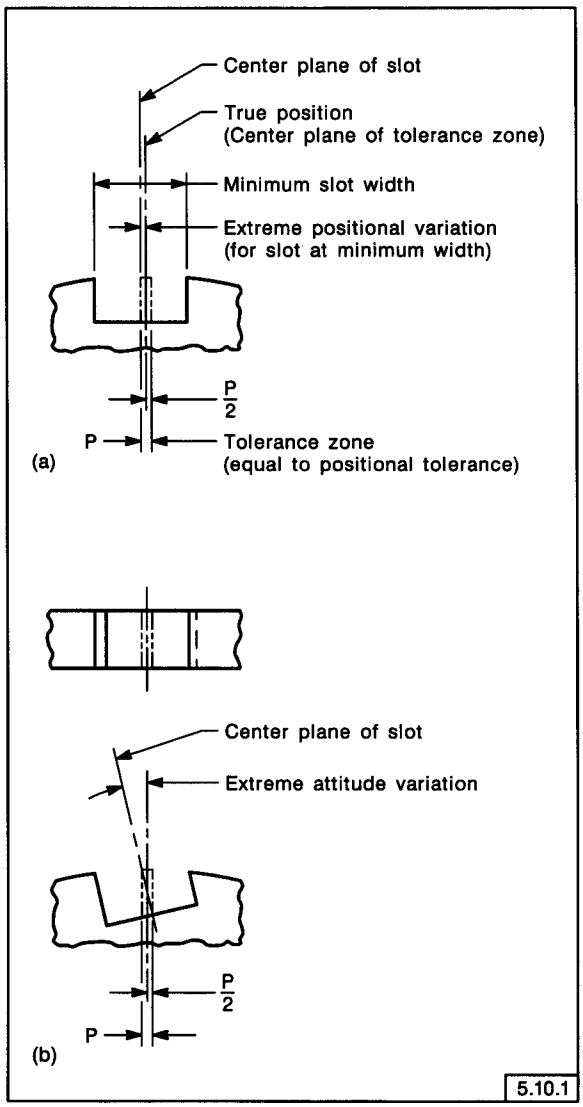

FIG. 5-46 TOLERANCE ZONE FOR CENTER PLANE OF SLOT AT MMC

tolerance can be allowed for both, only one feature control frame is necessary, directed to the feature by a leader and separated from the size dimensions.

NOTE: This boundary concept can also be applied to other irregularly shaped features — such as a D-shaped hole (with a flattened side) — where the center is not conveniently identifiable. See para. 6.5.5.1.

5.11 COAXIALITY CONTROLS

Coaxiality is that condition where the axes of two or more surfaces of revolution are coincident. The amount of permissible variation from coaxiality may be expressed by a positional tolerance or a runout tolerance. Selection of the proper control depends on the nature of the functional requirements of the design.

5.11.1 Positional Tolerance Control. Where the surfaces of revolution are cylindrical and the control of the axes can be applied on a material condition basis, positional tolerancing is recommended.

5.11.1.1 Coaxial Relationships. A coaxial relationship may be controlled by specifying a positional tolerance at MMC. See Fig. 5-48. A coaxial relationship may also be controlled by specifying a positional tolerance at RFS. See Fig. 5-55. The datum feature may be specified on either an MMC or an RFS basis, depending upon the design requirements. In Fig. 5-48, the datum feature is specified on an MMC basis. In such cases, any departure of the datum feature from MMC may result in an additional displacement between its axis and the axis of the considered feature. See the condition shown in Fig. 5-49(c). Where two or more features are coaxially related to such a datum — for example, a shaft having several diameters — the considered features are displaced as a group relative to the datum feature, as explained in para. 5.3.2.2 for a pattern of features.

5.11.1.2 Verification. The positional tolerance control shown in Fig. 5-48 usually permits, but does not dictate the use of a simple receiver gage for inspection. The application of such a gage is illustrated in Fig. 5-49, that shows:

(a) both the considered feature and the datum feature at MMC;

(b) the considered feature at LMC and the datum feature at MMC;

(c) both the considered feature and the datum feature at LMC, displaced in opposite extremes.

5.11.1.3 Coaxial Features Controlled Within Limits of Size. Where it is necessary to control coaxiality of related features within their limits of size, a zero positional tolerance at MMC is specified. The datum feature is normally specified on an MMC basis. See Fig. 5-50. Boundaries of perfect form are thereby established that are truly coaxial, where both features are at MMC. Variations in coaxiality are permitted only where the features depart from their MMC size toward LMC.

5.11.1.4 Alignment of Coaxial Holes. A composite positional tolerance may be used to control the alignment of two or more coaxial holes. This method allows specific control of feature-to-feature

Copyright ASME International
Provided by IHS under license with ASME
No reproduction or networking permitted without license from IHS
Not for Resale

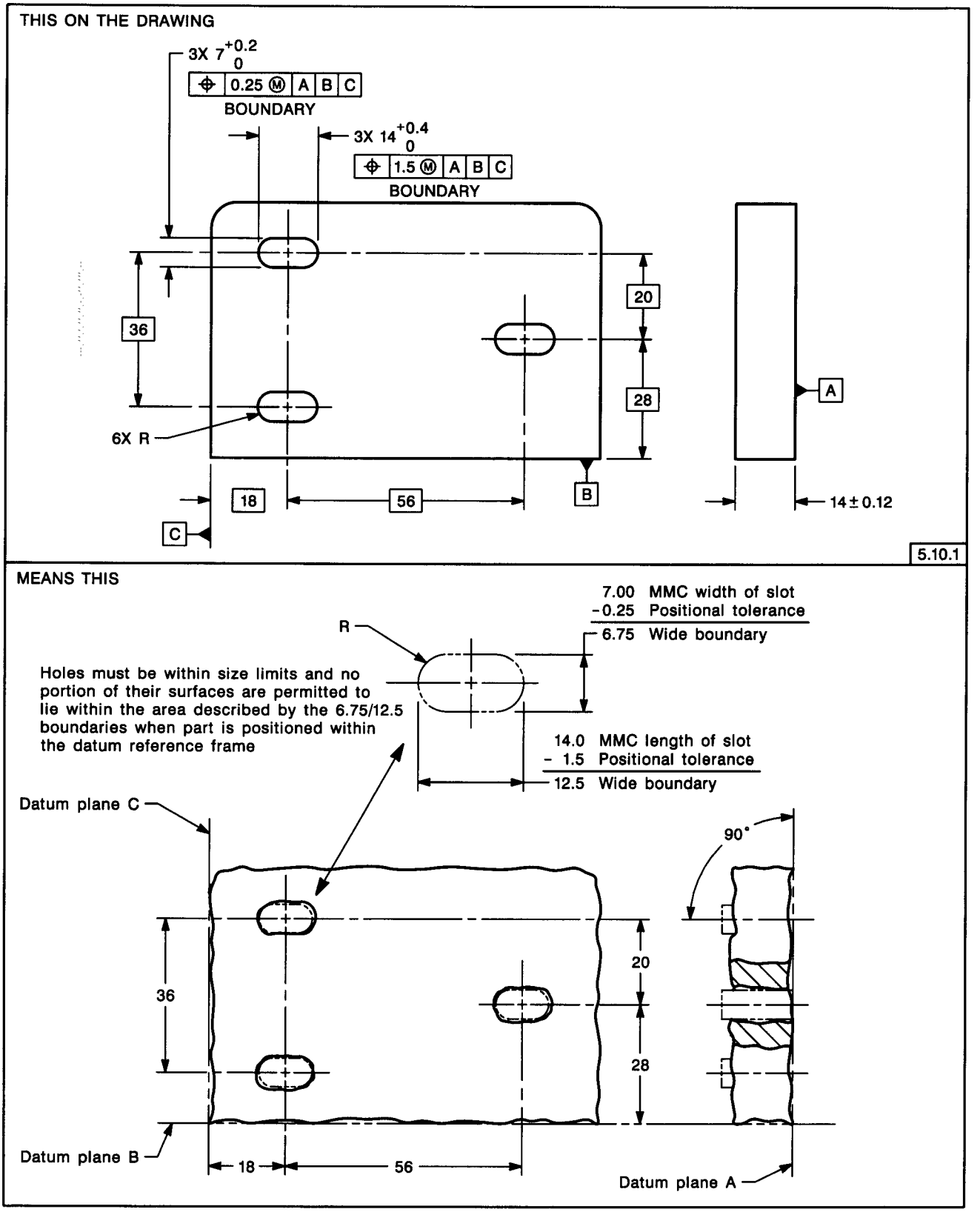

FIG. 5-47 POSITIONAL TOLERANCING OF ENLONGATED HOLES, BOUNDARY CONCEPT

Copyright ASME International
Provided by IHS under license with ASME
No reproduction or networking permitted without license from IHS
Not for Resale

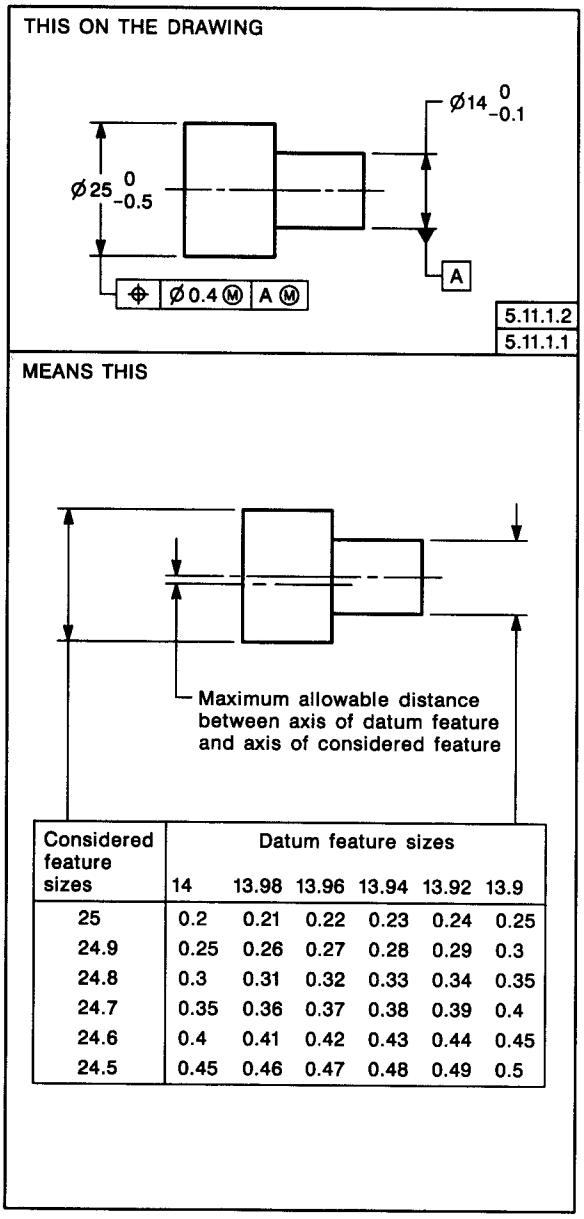

Considered feature sizes	Datum feature sizes					
	14	13.98	13.96	13.94	13.92	13.9
25	0.2	0.21	0.22	0.23	0.24	0.25
24.9	0.25	0.26	0.27	0.28	0.29	0.3
24.8	0.3	0.31	0.32	0.33	0.34	0.35
24.7	0.35	0.36	0.37	0.38	0.39	0.4
24.6	0.4	0.41	0.42	0.43	0.44	0.45
24.5	0.45	0.46	0.47	0.48	0.49	0.5

FIG. 5-48 POSITIONAL TOLERANCING FOR COAXIALITY

coaxiality without excessively restricting the pattern-locating tolerance.

5.11.1.5 Two or More Features in Pattern-Locating Tolerance. Controls, such as are shown in Fig. 5-51, may be specified where it is desired to produce two or more coaxial features within a relatively larger pattern-locating tolerance zone. The central axis of the PLTZF cylinders is parallel to datums A and B. Since the lower (feature-relating) segment of the feature control frame does not invoke orientation datums, the central axis of the FRTZF cylinders may be skewed relative to the central axis of the PLTZF cylinders. Depending upon the actually-produced size of each coaxial feature, each individual feature axis may be inclined within its respective tolerance zone cylinder.

5.11.1.5.1 Orientation of Feature-Relating Tolerances. Where it is desired to refine the orientation of the FRTZF cylinders as governed by the boundary established by the PLTZF cylinders, datum references specified in the upper segment of the frame are repeated, as applicable, and in the same order of precedence, in the lower segment of the feature control frame. See Fig. 5-52. Since the lower (feature-relating) segment of the feature control frame invokes datums A and B, the common axis of the FRTZF cylinders must be parallel to the common axis of the PLTZF cylinders.

5.11.1.6 Holes of Different Sizes. Where holes are of different specified sizes and the same requirements apply to all holes, a single feature control symbol, supplemented by a notation such as TWO COAXIAL HOLES is used. See Fig. 5-53. The same tolerance zone relationships apply as for Fig. 5-51.

5.11.2 Runout Tolerance Control. Where a combination of surfaces of revolution is cylindrical or conical relative to a common datum axis, or spherical relative to a common datum point, a runout tolerance is recommended. See para. 6.7. MMC is not applicable where a runout tolerance is specified, because runout controls the surface elements of a feature. See para. 2.8.

5.12 CONCENTRICITY

Concentricity is that condition where the median points of all diametrically opposed elements of a figure of revolution (or correspondingly-located elements of two or more radially-disposed features) are

Copyright ASME International
Provided by IHS under license with ASME
No reproduction or networking permitted without license from IHS
Not for Resale

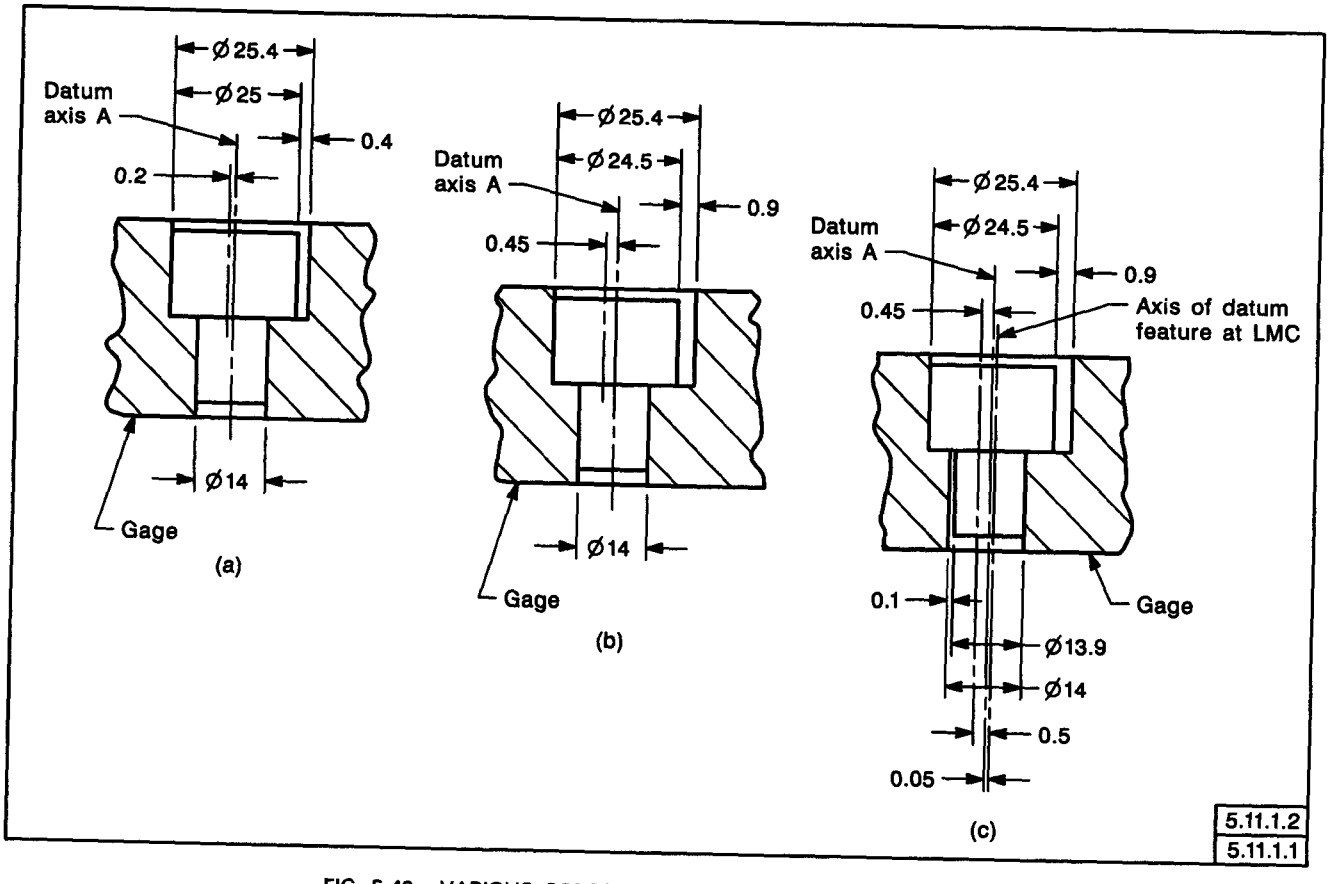

FIG. 5-49 VARIOUS CONDITIONS OF PART SHOWN IN FIG. 5-48

Copyright ASME International
Provided by IHS under license with ASME
No reproduction or networking permitted without license from IHS
Not for Resale

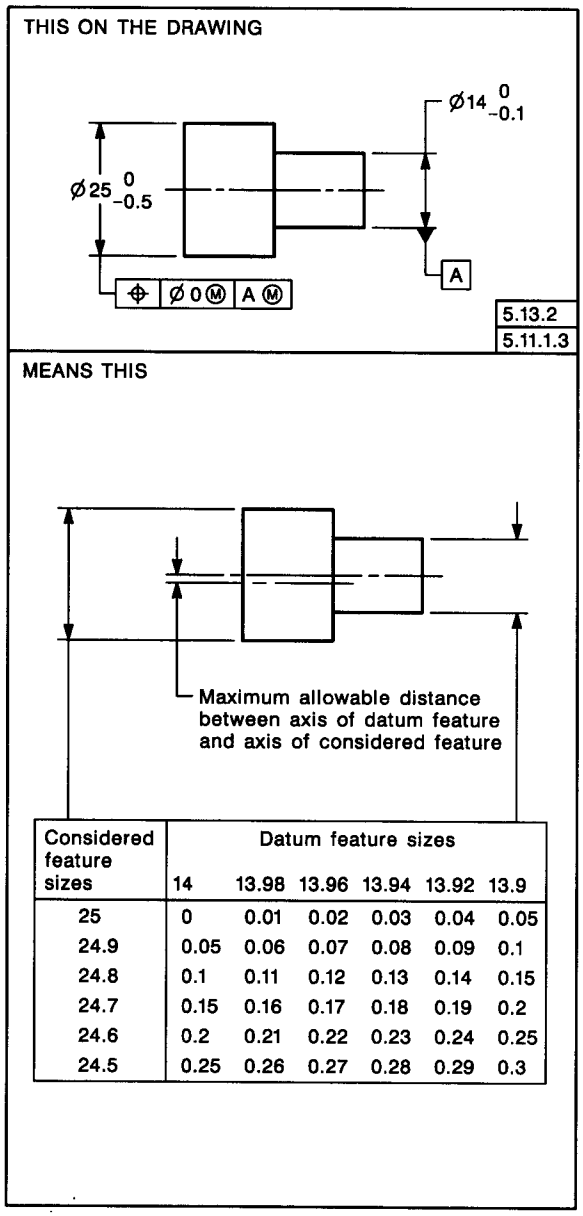

Considered feature sizes	Datum feature sizes					
	14	13.98	13.96	13.94	13.92	13.9
25	0	0.01	0.02	0.03	0.04	0.05
24.9	0.05	0.06	0.07	0.08	0.09	0.1
24.8	0.1	0.11	0.12	0.13	0.14	0.15
24.7	0.15	0.16	0.17	0.18	0.19	0.2
24.6	0.2	0.21	0.22	0.23	0.24	0.25
24.5	0.25	0.26	0.27	0.28	0.29	0.3

FIG. 5-50 ZERO POSITIONAL TOLERANCING AT MMC FOR COAXIALITY

congruent with the axis (or center point) of a datum feature.

5.12.1 Concentricity Tolerancing. A concentricity tolerance is a cylindrical (or spherical) tolerance zone whose axis (or center point) coincides with the axis (or center point) of the datum feature(s). The median points of all correspondingly-located elements of the feature(s) being controlled, regardless of feature size, must lie within the cylindrical (or spherical) tolerance zones. The specified tolerance and the datum reference can only apply on an RFS basis. See Fig. 5-54. Unlike the control covered by para. 5.11.1, where measurements taken along a surface of revolution are made to determine the location (eccentricity) of the axis or center point of the actual mating envelope, a concentricity tolerance requires the establishment and verification of the feature's median points.

NOTE: Irregularities in the form of an actual feature to be inspected may make it difficult to establish the location of that feature's median points. For example, a nominally cylindrical surface of revolution may be bowed or out of round in addition to being displaced from its datum axis. In such instances, finding the median points of the feature may entail a time-consuming analysis of surface variations. Therefore, unless there is a definite need for the control of the feature's median points, it is recommended that a control be specified in terms of a runout tolerance or a positional tolerance.

5.12.2 Difference Between Coaxiality Controls and Concentricity. The items shown in Figs. 5-56 and 5-57 are two possible acceptable configurations of the item depicted in Fig. 5-55. In Fig. 5-56, the axis of the controlled feature's actual mating envelope has been displaced 0.2 to the left, relative to the axis of datum feature A, and 0.5 material has been removed from the right side of the feature's surface. In Fig. 5-57, the axis of the controlled feature's actual mating envelope has also been displaced 0.2 to the left, relative to the axis of datum feature A, while 0.25 material has been removed from the upper side of the feature's surface and 0.25 material has been removed from the lower side of the feature's surface. Since the actual mating size of the controlled features in Figs. 5-56 and 5-57 is 25.0 diameter, the controlled features remain within acceptable limits of size. For coaxial positional tolerance, the location of the axis of the feature's actual mating envelope is controlled relative to the axis of the datum feature. Where checked for a coaxial positional tolerance relationship, the items depicted in Figs. 5-56 and 5-57 are acceptable. For concentricity, the locations of the midpoints of diametrically opposed (or correspondingly-located) feature elements are controlled relative to the axis of the datum feature.

Copyright ASME International
Provided by IHS under license with ASME
No reproduction or networking permitted without license from IHS
Not for Resale

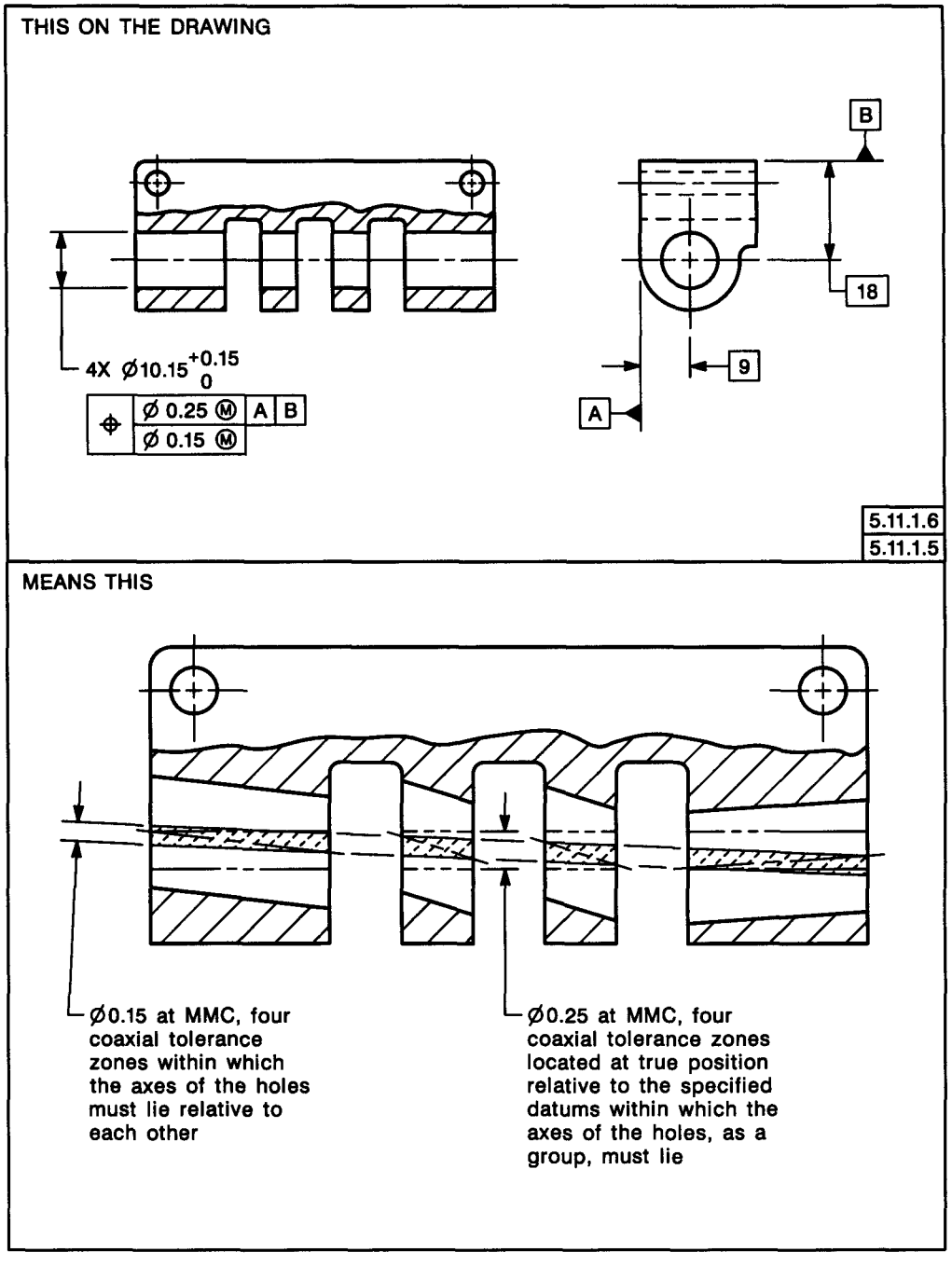

FIG. 5-51 POSITIONAL TOLERANCING FOR COAXIAL HOLES OF SAME SIZE

Copyright ASME International
Provided by IHS under license with ASME
No reproduction or networking permitted without license from IHS
Not for Resale

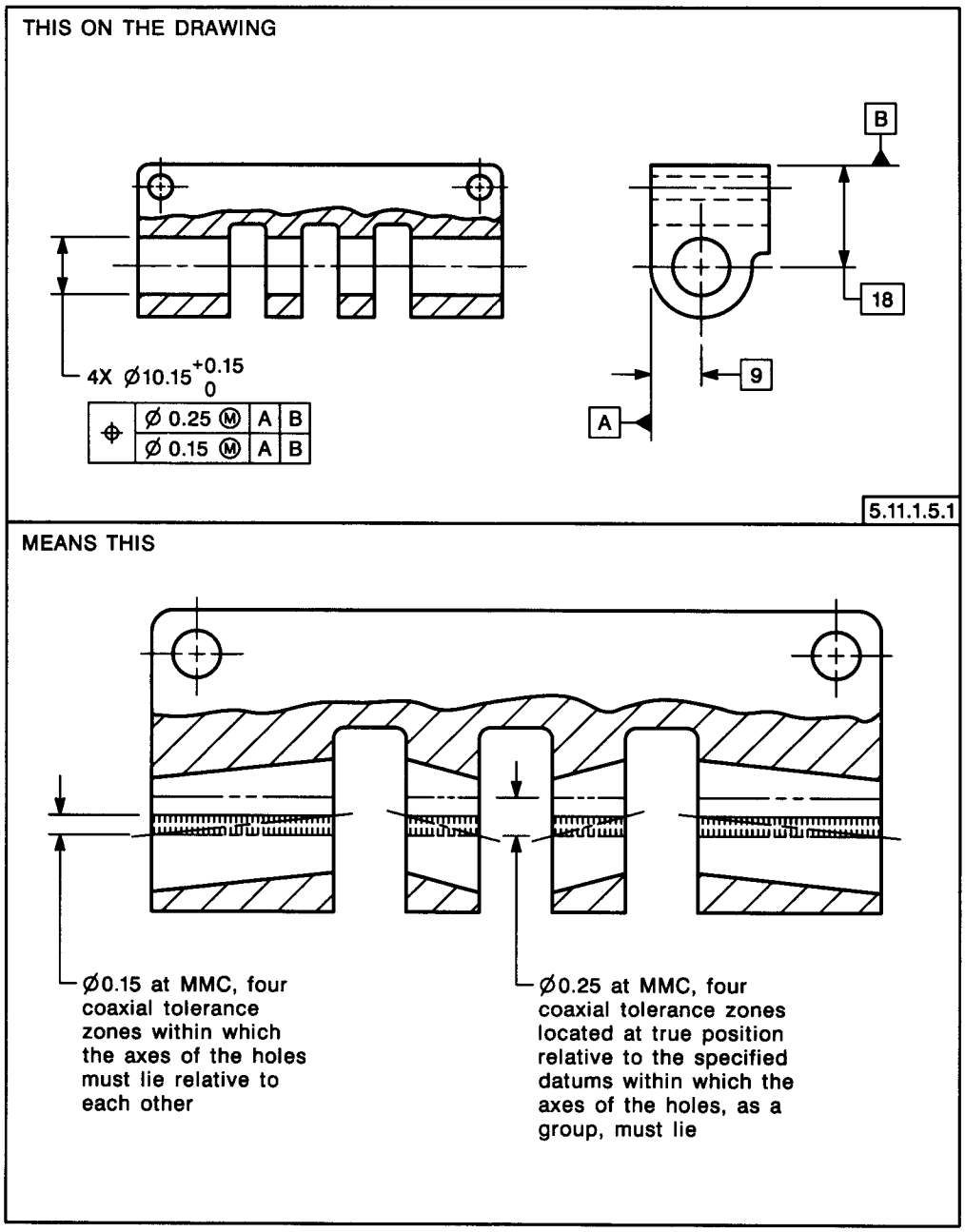

FIG. 5-52 POSITIONAL TOLERANCING FOR COAXIAL HOLES OF SAME SIZE, PARTIAL (PARALLELISM) REFINEMENT OF FEATURE-RELATING AXIS

Copyright ASME International
Provided by IHS under license with ASME
No reproduction or networking permitted without license from IHS
Not for Resale

See Fig. 5-58. Where the items depicted in Figs. 5-56 and 5-57 are checked for a concentricity relationship, only the part depicted in Fig. 5-57 would be acceptable, since the midpoints of some of the diametrically opposed elements in Fig. 5-56 would exceed the boundary of the 0.4 diameter concentricity tolerance cylinder.

5.13 POSITIONAL TOLERANCING FOR SYMMETRICAL RELATIONSHIPS

Positional tolerancing for symmetrical relationships is that condition where the center plane of the actual mating envelope of one or more features is congruent with the axis or center plane of a datum feature within specified limits. MMC, LMC, or RFS modifiers may be specified to apply to both the tolerance and the datum feature.

5.13.1 Positional Tolerancing at MMC for Assemblability. A symmetrical relationship may be controlled by specifying a positional tolerance at MMC as in Fig. 5-59. The explanations given in paras. 5.10.1(a) and (b) apply to the considered feature. The datum feature may be specified either on an MMC, LMC, or RFS basis, depending upon the design requirements.

5.13.2 Zero Positional Tolerancing at MMC for Symmetrical Relationships. Where it is necessary to control the symmetrical relationship of related features within their limits of size, a zero positional tolerance at MMC is specified. The datum feature is normally specified on an MMC basis. Boundaries of perfect form are thereby established that are truly symmetrical where both features are at MMC. Variations in position are permitted only where the features depart from their MMC size toward LMC. This application is the same as that shown in Fig. 5-50 except that it applies a tolerance to a center plane location.

5.13.3 Positional Tolerancing RFS for Assemblability. Some designs may require a control of the symmetrical relationship between features regardless of their actual sizes. In such cases, both the specified positional tolerance and the datum reference apply on an RFS basis. See Fig. 5-60.

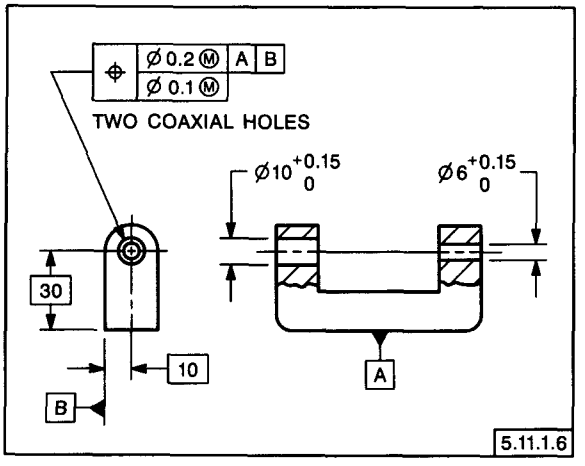

FIG. 5-53 POSITIONAL TOLERANCING FOR COAXIAL HOLES OF DIFFERENT SIZE

5.14 SYMMETRY TOLERANCING TO CONTROL THE MEDIAN POINTS OF OPPOSED OR CORRESPONDINGLY-LOCATED ELEMENTS OF FEATURES

Symmetry is that condition where the median points of all opposed or correspondingly-located elements of two or more feature surfaces are congruent with the axis or center plane of a datum feature. Where design requirements dictate a need for the use of a symmetry tolerance and symbol, the method shown in Fig. 5-61 may be followed. The explanation given in para. 5.12 applies to the considered feature(s), since symmetry and concentricity controls are the same concept, except as applied to different part configurations. Symmetry tolerance and the datum reference can only apply on an RFS basis.

5.15 SPHERICAL FEATURES

A positional tolerance may be used to control the location of a spherical feature relative to other features of a part. See Fig. 5-62. The symbol for spherical diameter precedes the size dimension of the feature and the positional tolerance value, to indicate a spherical tolerance zone. Where it is intended for the tolerance zone shape to be otherwise, a special indication is shown, similar to the example shown for a bidirectional tolerance zone of a cylindrical hole. See Fig. 5-41.

Copyright ASME International
Provided by IHS under license with ASME
No reproduction or networking permitted without license from IHS
Not for Resale

THIS ON THE DRAWING

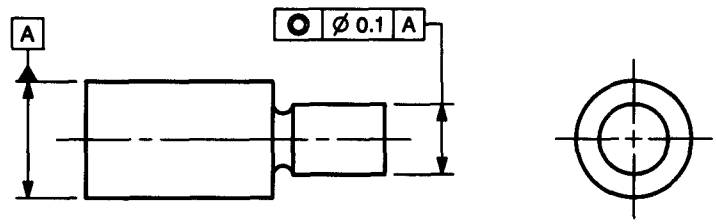

5.12.1

MEANS THIS

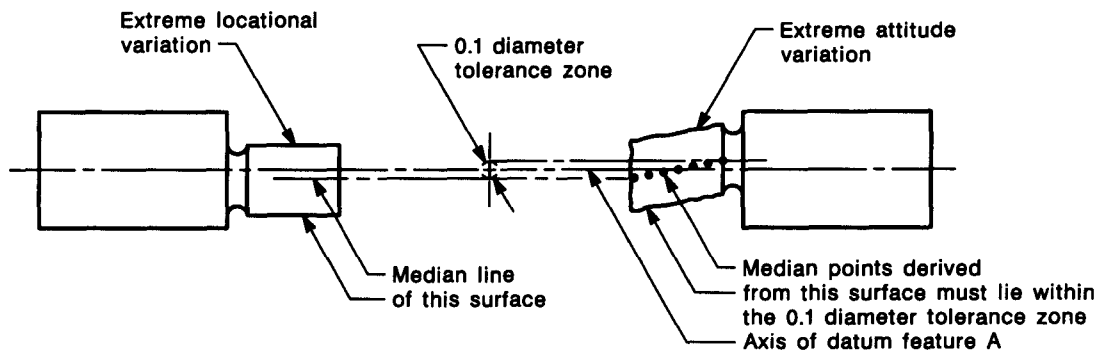

Within the limits of size and regardless of feature size, all median points of diametrically-opposed elements of the feature must lie within a ⌀0.1 cylindrical tolerance zone. The axis of the tolerance zone coincides with the axis of datum feature A. The specified tolerance and the datum reference apply only on an RFS basis.

FIG. 5-54 CONCENTRICITY TOLERANCING

Copyright ASME International
Provided by IHS under license with ASME
No reproduction or networking permitted without license from IHS
Not for Resale

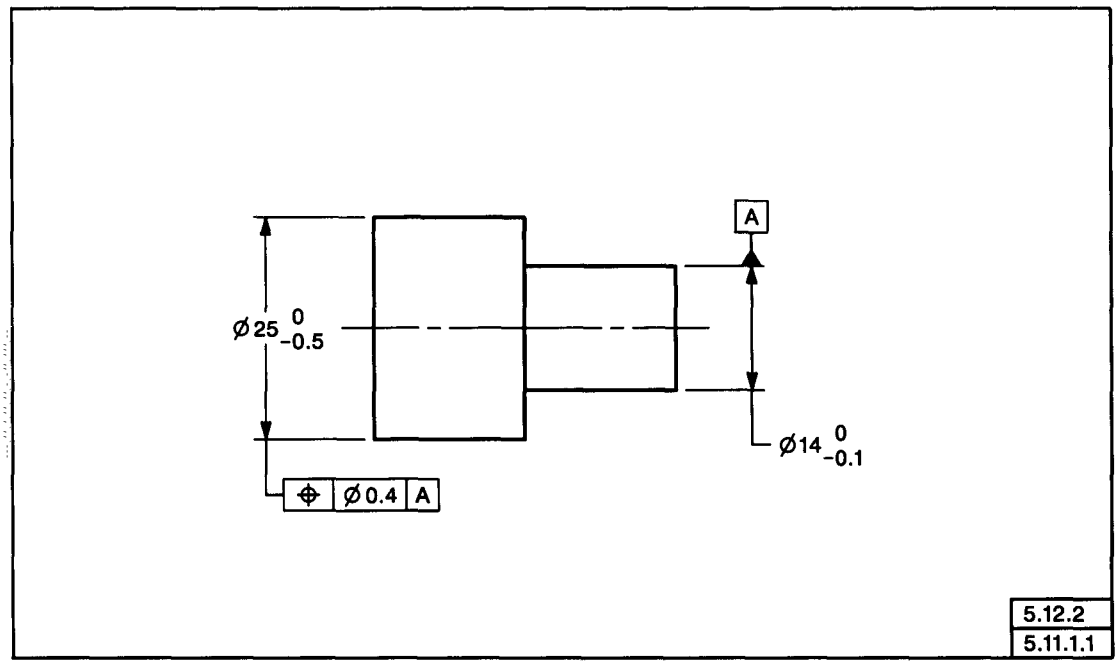

FIG. 5-55 ITEM CONTROLLED WITH POSITIONAL TOLERANCE FOR COAXIALITY RFS–RFS

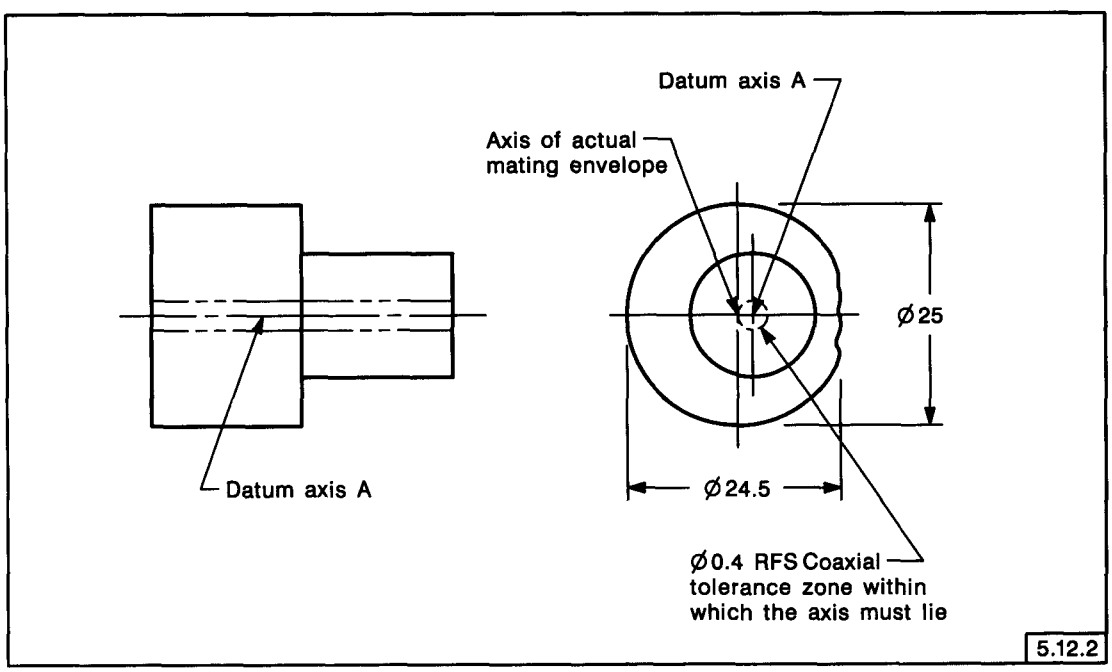

FIG. 5-56 ONE POSSIBLE ACCEPTABLE CONFIGURATION OF PART DEPICTED IN FIG. 5-55

Copyright ASME International
Provided by IHS under license with ASME
No reproduction or networking permitted without license from IHS
Not for Resale

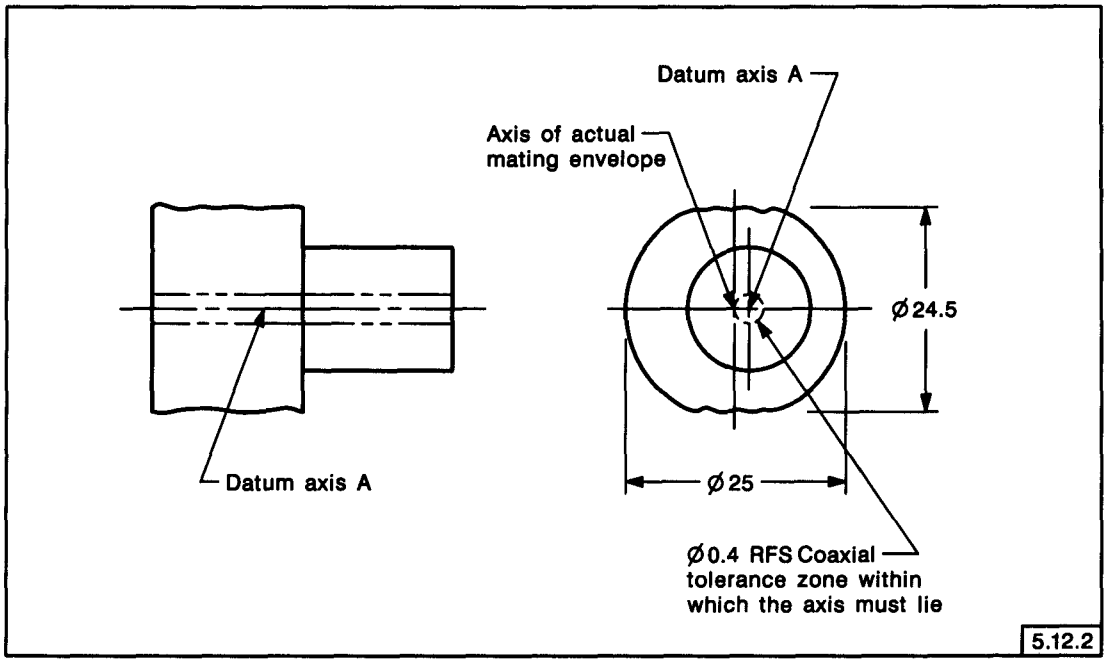

FIG. 5-57 ONE POSSIBLE ACCEPTABLE CONFIGURATION OF PART DEPICTED IN FIG. 5-55

Copyright ASME International
Provided by IHS under license with ASME
No reproduction or networking permitted without license from IHS
Not for Resale

THIS ON THE DRAWING

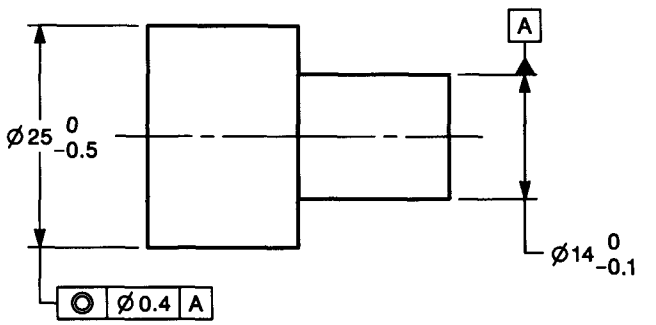

5.12.2

MEANS THIS

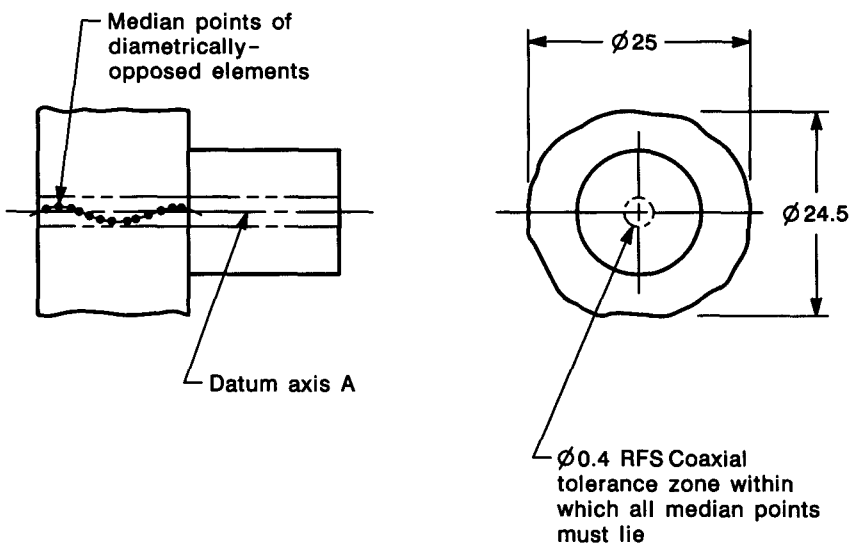

FIG. 5-58 ITEM DEPICTED IN FIG. 5-55 CONTROLLED FOR CONCENTRICITY

Copyright ASME International
Provided by IHS under license with ASME
No reproduction or networking permitted without license from IHS
Not for Resale

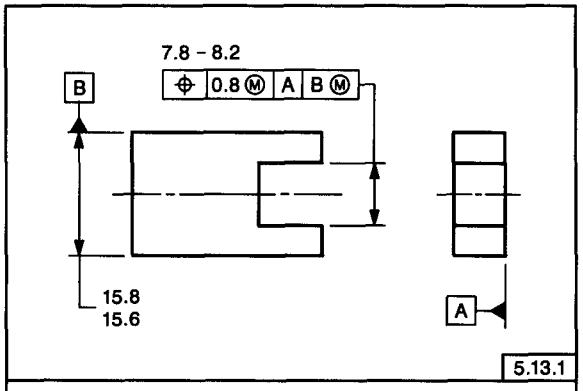

		Feature Size				
		7.8	7.9	8.0	8.1	8.2
Datum Size	15.8	0.8	0.9	1.0	1.1	1.2
	15.7	0.9	1.0	1.1	1.2	1.3
	15.6	1.0	1.1	1.2	1.3	1.4

FIG. 5-59 POSITIONAL TOLERANCING AT MMC FOR SYMMETRICAL FEATURES

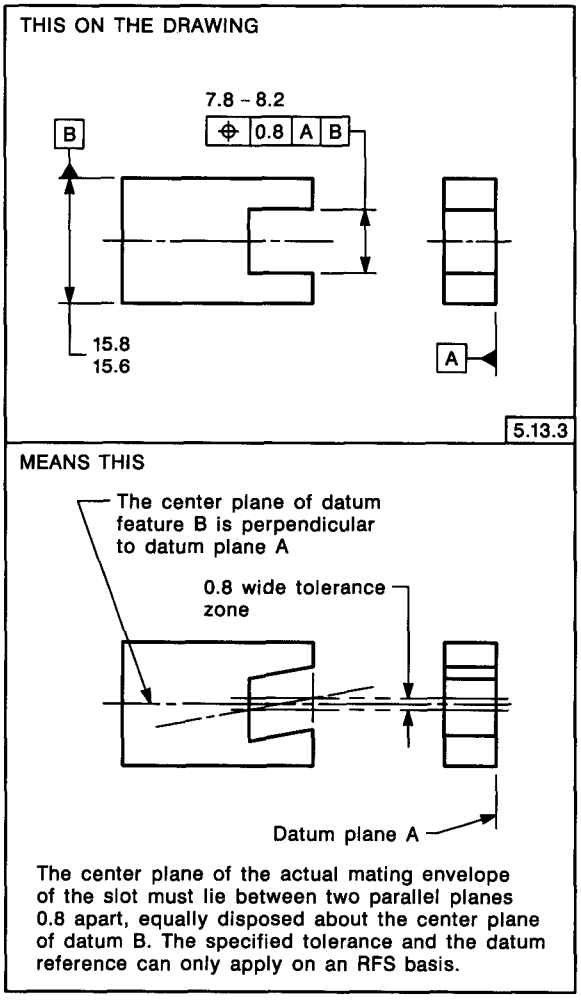

FIG. 5-60 POSITIONAL TOLERANCING RFS–RFS FOR SYMMETRICAL FEATURES

Copyright ASME International
Provided by IHS under license with ASME
No reproduction or networking permitted without license from IHS
Not for Resale

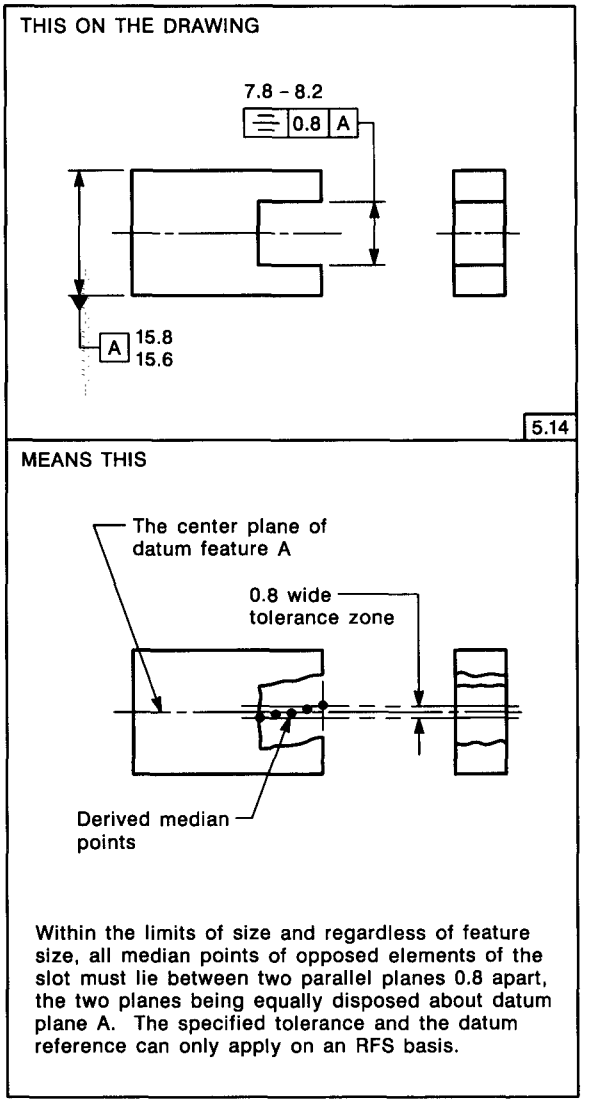

FIG. 5-61 SYMMETRY TOLERANCING

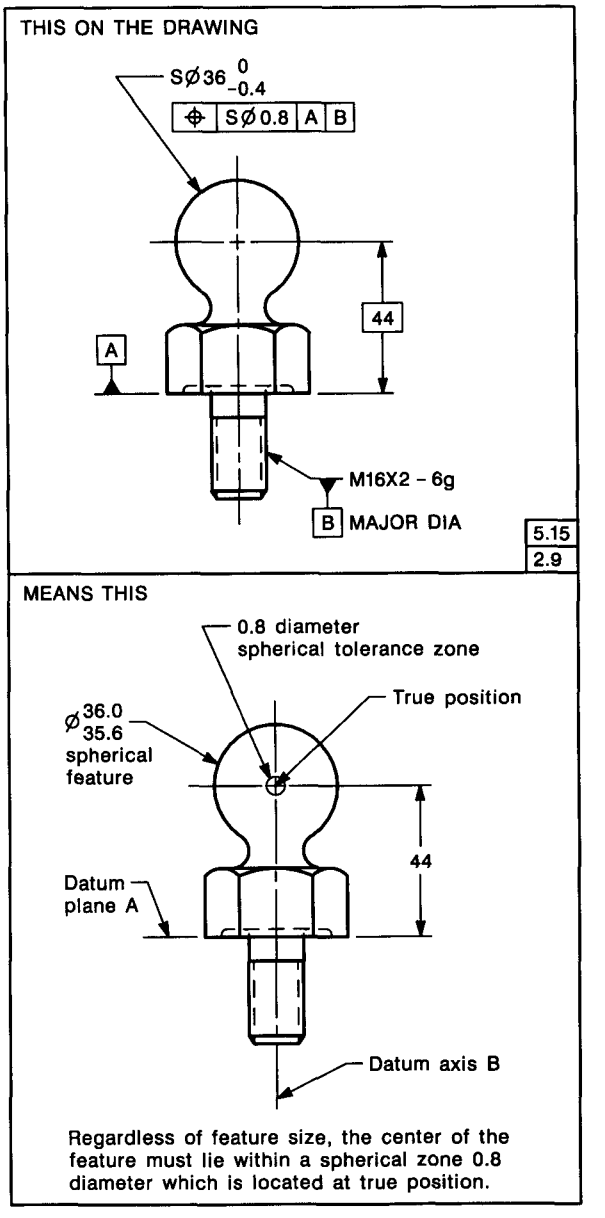

FIG. 5-62 SPHERICAL FEATURE LOCATED BY POSITIONAL TOLERANCING

Copyright ASME International
Provided by IHS under license with ASME
No reproduction or networking permitted without license from IHS
Not for Resale

Copyright ASME International
Provided by IHS under license with ASME
No reproduction or networking permitted without license from IHS
Not for Resale

6 Tolerances of Form, Profile, Orientation, and Runout

6.1 GENERAL

This Section establishes the principles and methods of dimensioning and tolerancing to control form, profile, orientation, and runout of various geometrical shapes and free state variations.

6.2 FORM AND ORIENTATION CONTROL

Form tolerances control straightness, flatness, circularity, and cylindricity. Orientation tolerances control angularity, parallelism, and perpendicularity. A profile tolerance may control form, orientation, size, and location depending on how it is applied. Since, to a certain degree, the limits of size control form and parallelism, and tolerances of location control orientation, the extent of these controls should be considered before specifying form and orientation tolerances. See para. 2.7 and Figs. 2-6 and 5-6.

6.3 SPECIFYING FORM AND ORIENTATION TOLERANCES

Form and orientation tolerances critical to function and interchangeability are specified where the tolerances of size and location do not provide sufficient control. A tolerance of form or orientation may be specified where no tolerance of size is given, for example, in the control of flatness after assembly of the parts.

6.3.1 Form and Orientation Tolerance Zones. A form or orientation tolerance specifies a zone within which the considered feature, its line elements, its axis, or its center plane must be contained.

6.3.1.1 Cylindrical Tolerance Zone. Where the tolerance value represents the diameter of a cylindrical zone, it is preceded by the diameter symbol. In all other cases, the tolerance value represents a total linear distance between two geometric boundaries and no symbol is required.

6.3.1.2 Limited Area and Length. Certain designs require control over a limited area or length of the surface, rather than control of the total surface. In these instances, the area or length, and its location are indicated by a heavy chain line drawn adjacent to the surface with appropriate dimensioning. Where so indicated, the specified tolerance applies within these limits instead of to the total surface. See para. 4.5.10 and Fig. 4-23.

6.3.1.3 Identifying Datum References. It is necessary to identify features on a part to establish datums from which dimensions control orientation, runout, and when necessary, profile. For example, in Fig. 6-22, if datum references had been omitted, it would not be clear whether the larger diameter or the smaller diameter was the intended datum feature for the dimensions controlling profile. The intended datum features are identified with datum feature symbols and the applicable datum references are included in the feature control frame. For information on specifying datums in an order of precedence, see para. 4.4.

6.4 FORM TOLERANCES

Form tolerances are applicable to single (individual) features or elements of single features; therefore, form tolerances are not related to datums. The following subparagraphs cover the particulars of the form tolerances — straightness, flatness, circularity, and cylindricity.

6.4.1 Straightness. *Straightness* is a condition where an element of a surface, or an axis, is a straight line.

6.4.1.1 Straightness Tolerance. A straightness tolerance specifies a tolerance zone within which the considered element or derived median line must lie. A straightness tolerance is applied in the view where the elements to be controlled are represented by a straight line.

6.4.1.1.1 Cylindrical Features. Figure 6-1 shows an example of a cylindrical feature where all circular elements of the surface are to be within the

Copyright ASME International
Provided by IHS under license with ASME
No reproduction or networking permitted without license from IHS
Not for Resale

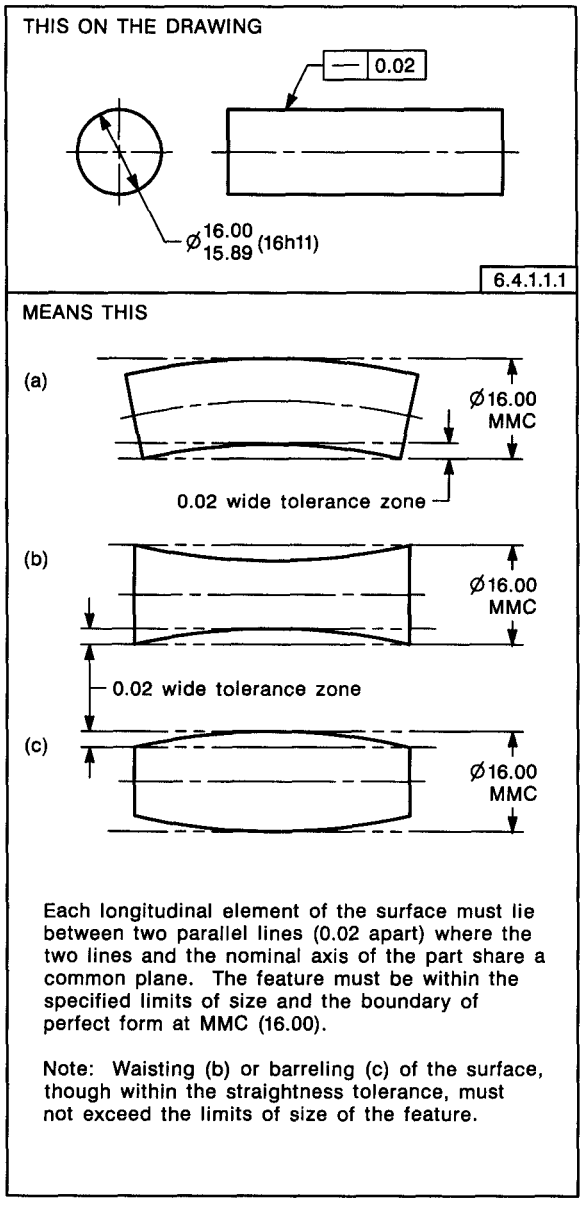

FIG. 6-1 SPECIFYING STRAIGHTNESS OF SURFACE ELEMENTS

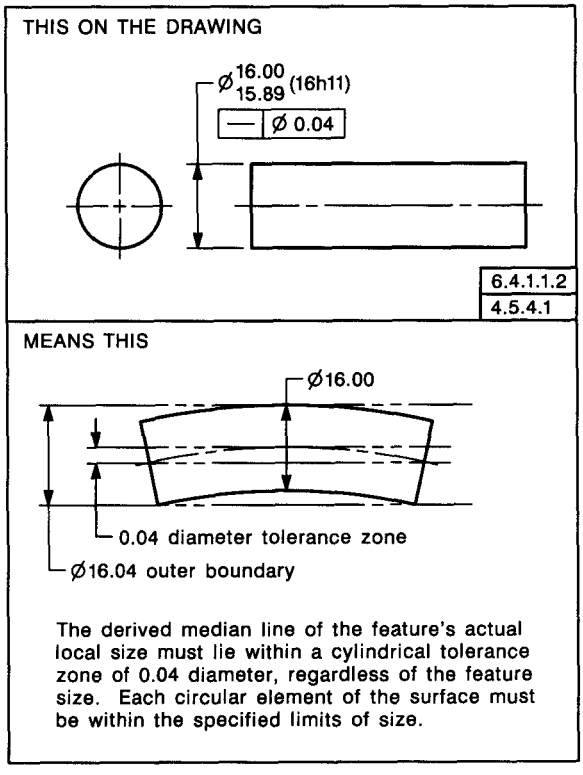

FIG. 6-2 SPECIFYING STRAIGHTNESS RFS

specified size tolerance. Each longitudinal element of the surface must lie between two parallel lines separated by the amount of the prescribed straightness tolerance and in a plane common with the nominal axis of the feature. The feature control frame is attached to a leader directed to the surface or extension line of the surface but not to the size dimension. The straightness tolerance must be less than the size tolerance. Since the limits of size must be respected, the full straightness tolerance may not be available for opposite elements in the case of waisting or barreling of the surface. See Fig. 6-1.

6.4.1.1.2 Violation of MMC Boundary. Figures 6-2 and 6-3 show examples of cylindrical features where all circular elements of the surface are to be within the specified size tolerance; however, the boundary of perfect form at MMC may be violated. This violation is permissible when the feature control frame is associated with the size dimension or attached to an extension of the dimension line. In this instance, a diameter symbol precedes the tolerance value and the tolerance is applied on either an RFS or MMC basis. Where necessary and when not used in conjunction with an orientation or position tolerance, the straightness tolerance may be greater than the size tolerance. Where the straightness tolerance is used in conjunction with an orientation tolerance or a position tolerance, the specified straightness tolerance value shall not be greater than the specified orientation or position tolerance values. The collective effect of size and form variation can produce a virtual condition or outer or inner boundary equal to the MMC size plus the straightness tolerance. When applied on an RFS ba-

Copyright ASME International
Provided by IHS under license with ASME
No reproduction or networking permitted without license from IHS
Not for Resale

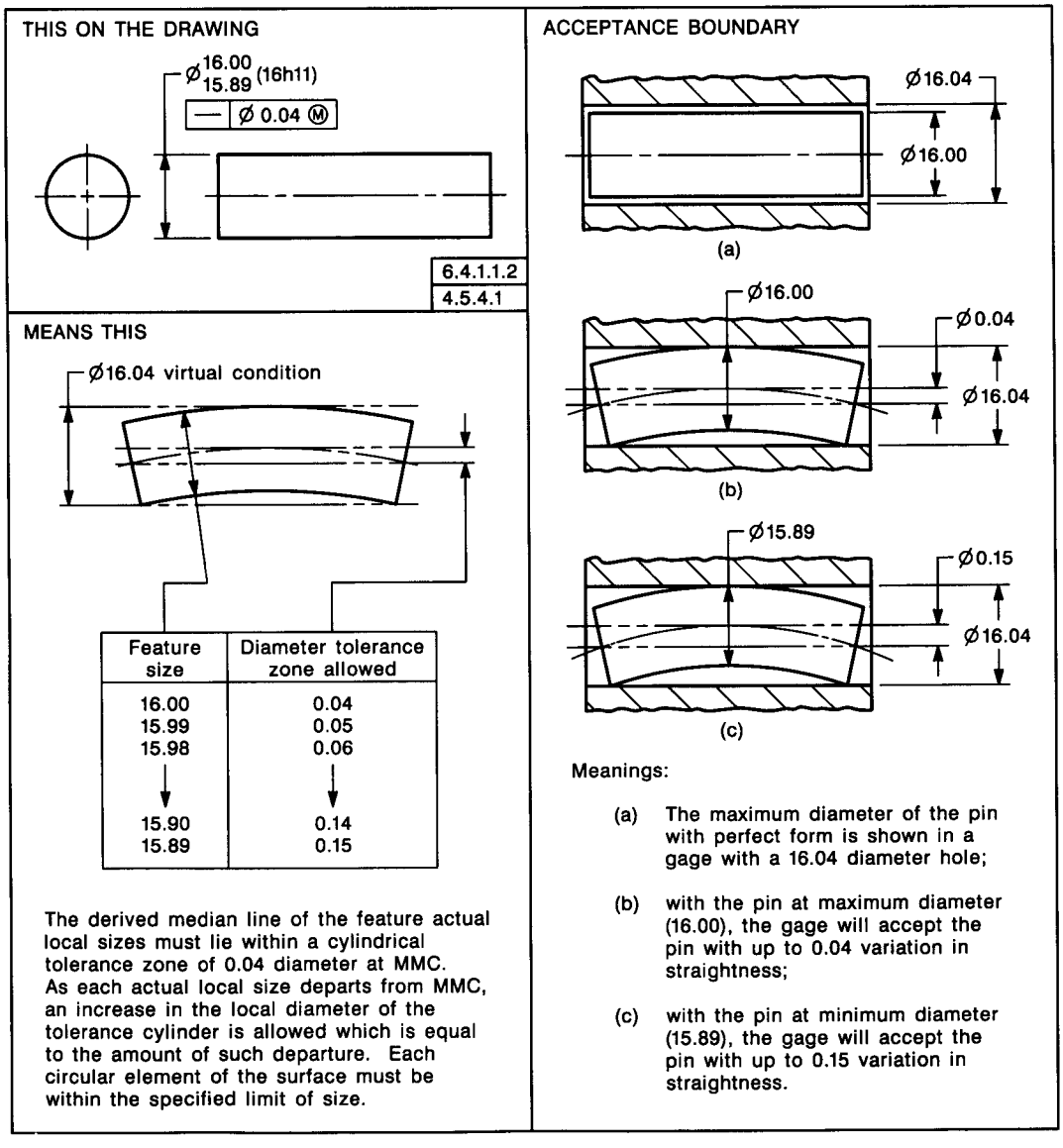

FIG. 6-3 SPECIFYING STRAIGHTNESS AT MMC

Copyright ASME International
Provided by IHS under license with ASME
No reproduction or networking permitted without license from IHS
Not for Resale

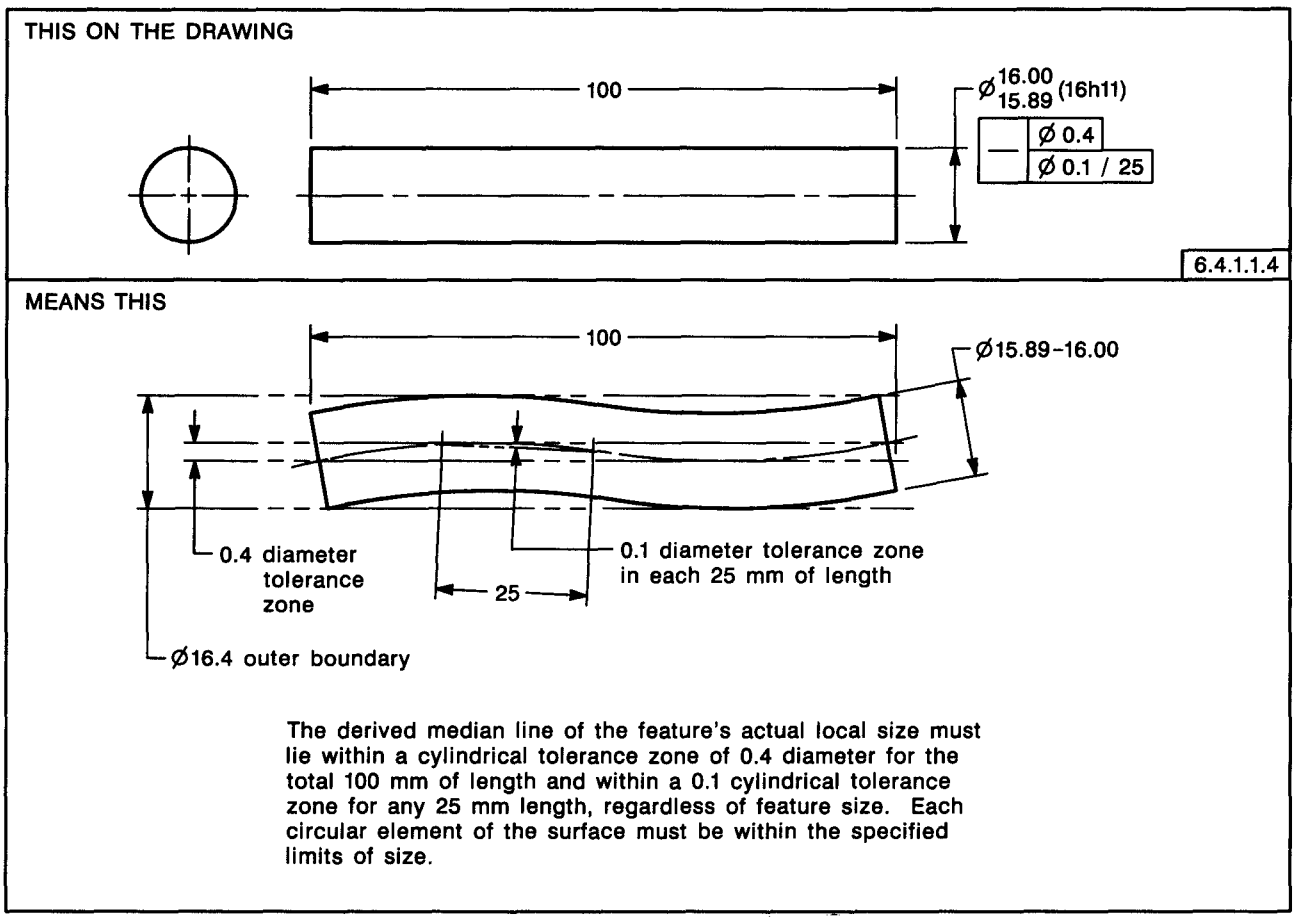

FIG. 6-4 SPECIFYING STRAIGHTNESS PER UNIT LENGTH WITH SPECIFIED TOTAL STRAIGHTNESS, BOTH RFS

sis, as in Fig. 6-2, the maximum straightness tolerance is the specified tolerance. When applied on an MMC basis, as in Fig. 6-3, the maximum straightness tolerance is the specified tolerance plus the amount the actual local size of the feature departs from its MMC size. The derived median line of an actual feature at MMC must lie within a cylindrical tolerance zone as specified. As each actual local size departs from MMC, an increase in the local diameter of the tolerance zone is allowed that is equal to the amount of such departure. Each circular element of the surface (that is, actual local size) must be within the specified limits of size.

6.4.1.1.3 Application of RFS or MMC to Noncylindrical Features. As an extension of the principles of para. 6.4.1.1.2, straightness may be applied on an RFS or MMC basis to noncylindrical features of size. In this instance, the derived median plane must lie in a tolerance zone between two parallel planes separated by the amount of the tolerance. Feature control frame placement and arrangement as described in para. 6.4.1.1.2 apply, except the diameter symbol is not used since the tolerance zone is noncylindrical.

6.4.1.1.4 Applied on Unit Basis. Straightness may be applied on a unit basis as a means of preventing an abrupt surface variation within a relatively short length of the feature. See Fig. 6-4. Caution should be exercised when using unit control without specifying a maximum limit because of the relatively large theoretical variations that may result if left unrestricted. If the unit variation appears as a "bow" in the toleranced feature, and the "bow" is allowed to continue at the same rate for several units, the overall tolerance variation may result in an unsatisfactory part. Figure 6-5 illustrates the possible condition where straightness per unit length given in Fig. 6-4 is used alone, that is, if straightness for the total length is not specified.

6.4.1.1.5 Straightness of Line Elements. Figure 6-6 illustrates the use of straightness tolerance on a flat surface. Straightness may be applied to control line elements in a single direction on a flat sur-

Copyright ASME International
Provided by IHS under license with ASME
No reproduction or networking permitted without license from IHS
Not for Resale

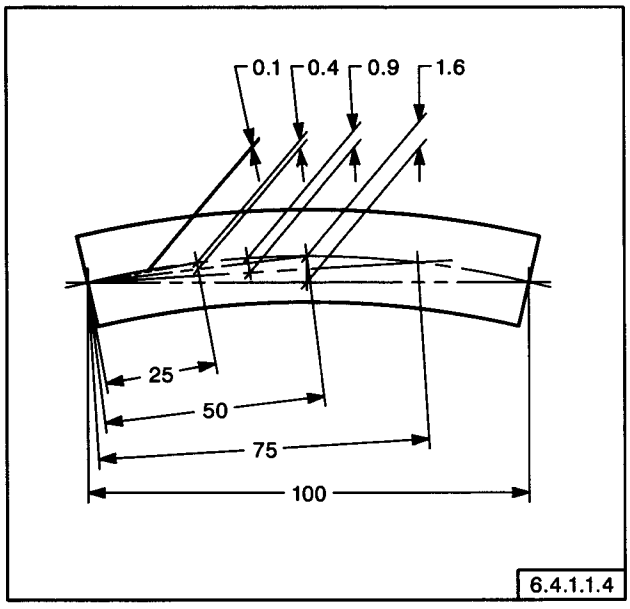

FIG. 6-5 POSSIBLE RESULTS OF SPECIFYING STRAIGHTNESS PER UNIT LENGTH RFS, WITH NO SPECIFIED TOTAL

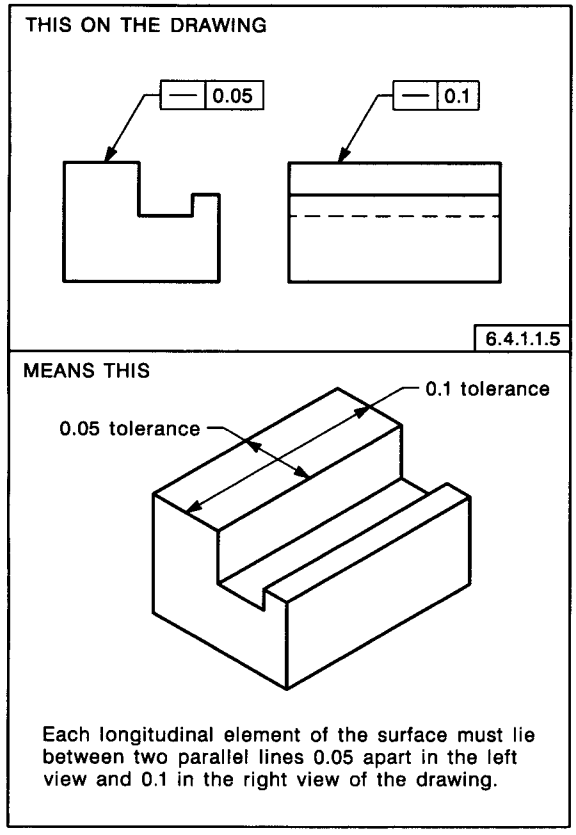

FIG. 6-6 SPECIFYING STRAIGHTNESS OF FLAT SURFACES

face; it may also be applied in two directions as shown. Where function requires the line elements to be related to a datum feature(s), profile of a line should be specified related to datums. See Fig. 6-18.

6.4.2 Flatness. *Flatness* is the condition of a surface having all elements in one plane.

6.4.2.1 Flatness Tolerance. A flatness tolerance specifies a tolerance zone defined by two parallel planes within which the surface must lie. When a flatness tolerance is specified, the feature control frame is attached to a leader directed to the surface or to an extension line of the surface. It is placed in a view where the surface elements to be controlled are represented by a line. See Fig. 6-7. Where the considered surface is associated with a size dimension, the flatness tolerance must be less than the size tolerance.

6.4.2.1.1 Applied on Unit Basis. Flatness may be applied on a unit basis as a means of preventing an abrupt surface variation within a relatively small area of the feature. The unit variation is used either in combination with a specified total variation, or alone. Caution should be exercised when using unit control alone for the reasons given in para. 6.4.1.1.4. Since flatness involves surface area, the size of the unit area, for example 25 X 25, is speci-

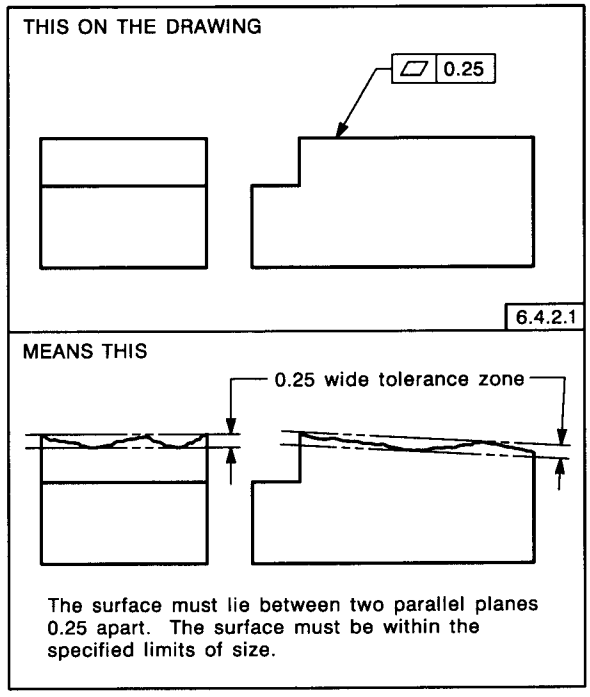

FIG. 6-7 SPECIFYING FLATNESS

Copyright ASME International
Provided by IHS under license with ASME
No reproduction or networking permitted without license from IHS
Not for Resale

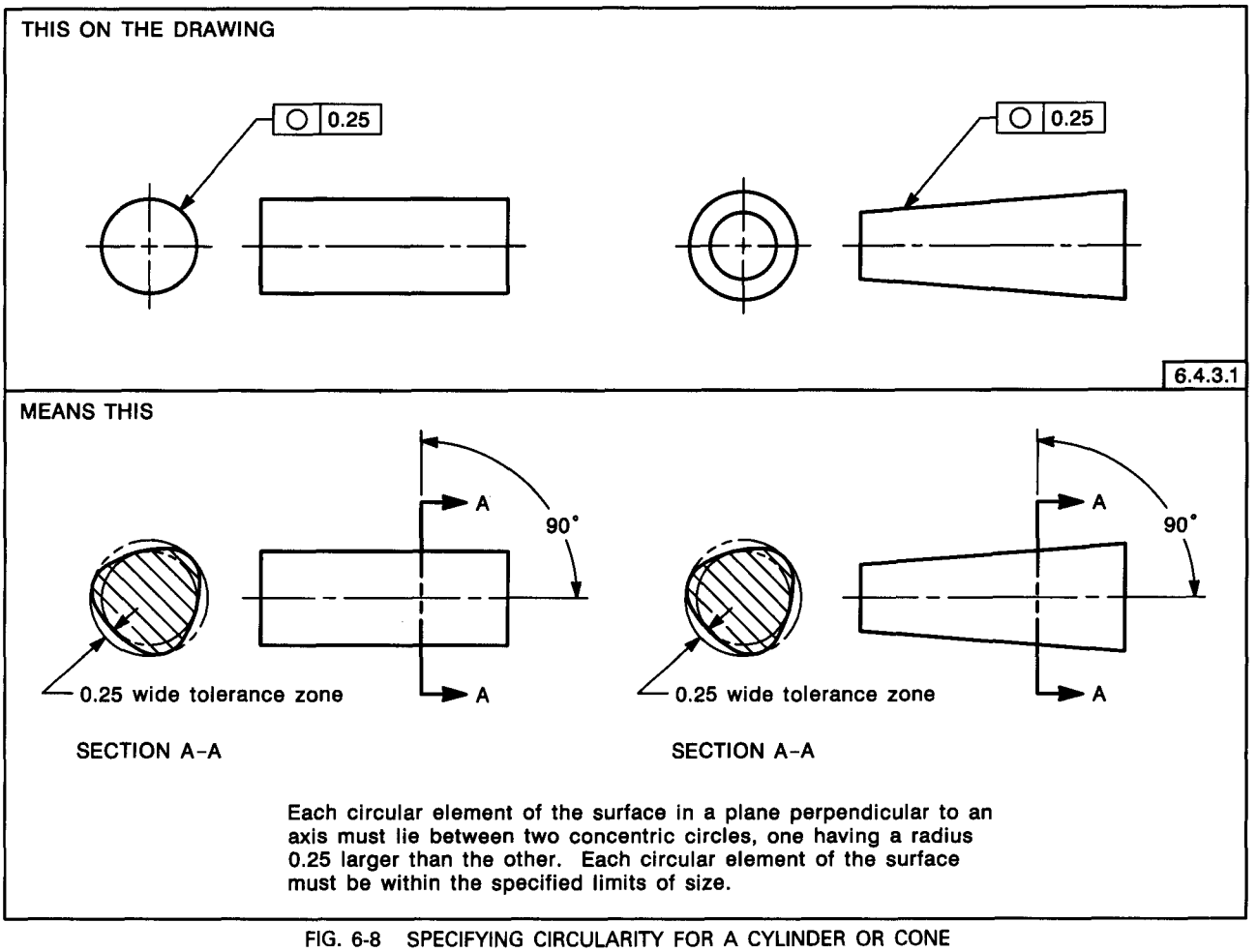

FIG. 6-8 SPECIFYING CIRCULARITY FOR A CYLINDER OR CONE

fied to the right of the flatness tolerance, separated by a slash. For example:

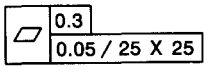

6.4.3 Circularity (Roundness). *Circularity* is a condition of a surface where:

(a) for a feature other than a sphere, all points of the surface intersected by any plane perpendicular to an axis are equidistant from that axis;

(b) for a sphere, all points of the surface intersected by any plane passing through a common center are equidistant from that center.

6.4.3.1 Circularity Tolerance. A circularity tolerance specifies a tolerance zone bounded by two concentric circles within which each circular element of the surface must lie, and applies independently at any plane described in (a) and (b) above. See Figs. 6-8 and 6-9. The circularity tolerance must be less than the size tolerance, except for those parts subject to free state variation. See para. 6.8.

NOTE: See ANSI B89.3.1 for further information on this subject.

6.4.4 Cylindricity. *Cylindricity* is a condition of a surface of revolution in which all points of the surface are equidistant from a common axis.

6.4.4.1 Cylindricity Tolerance. A cylindricity tolerance specifies a tolerance zone bounded by two concentric cylinders within which the surface must lie. In the case of cylindricity, unlike that of circularity, the tolerance applies simultaneously to both circular and longitudinal elements of the surface (the entire surface). See Fig. 6-10. The leader from the feature control frame may be directed to either view. The cylindricity tolerance must be less than the size tolerance.

NOTE: The cylindricity tolerance is a composite control of form that includes circularity, straightness, and taper of a cylindrical feature.

Copyright ASME International
Provided by IHS under license with ASME
No reproduction or networking permitted without license from IHS
Not for Resale

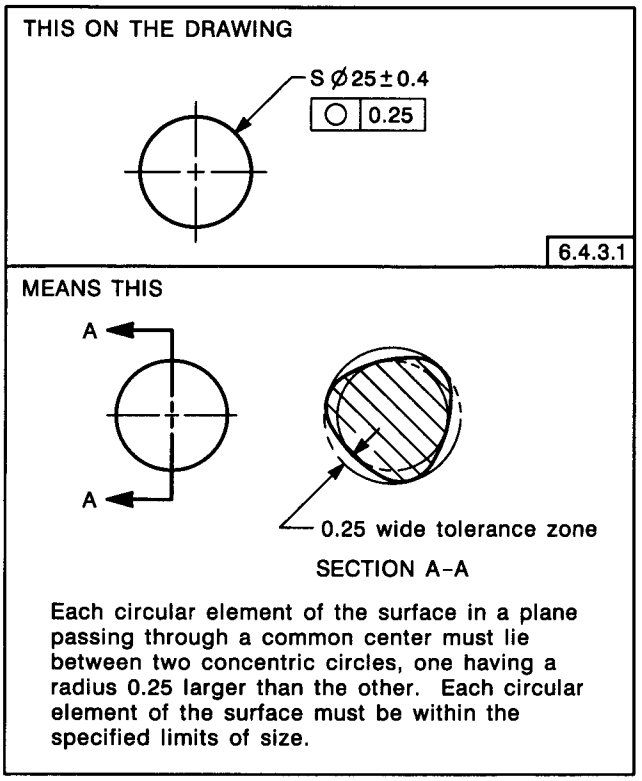

FIG. 6-9 SPECIFYING CIRCULARITY FOR A SPHERE

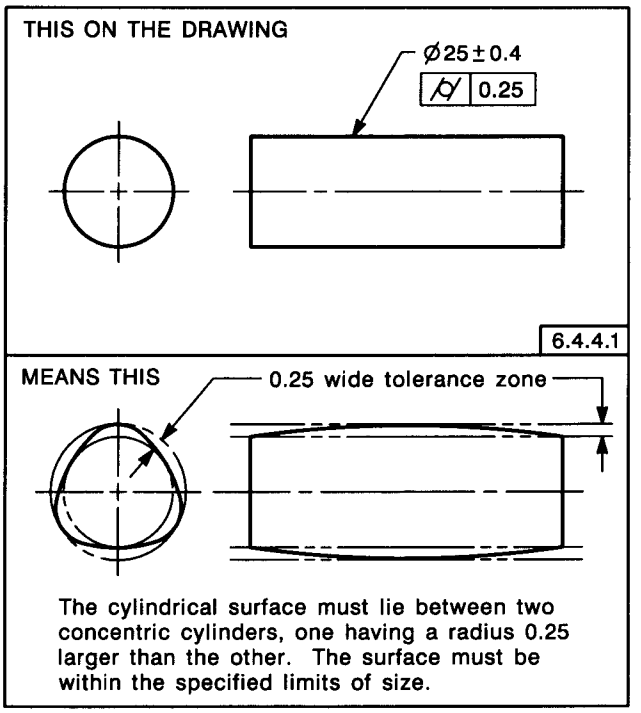

FIG. 6-10 SPECIFYING CYLINDRICITY

6.5 PROFILE CONTROL

A *profile* is the outline of an object in a given plane (two-dimensional figure). Profiles are formed by projecting a three-dimensional figure onto a plane or by taking cross sections through the figure. The elements of a profile are straight lines, arcs, and other curved lines. If the drawing specifies individual tolerances for the elements or points of a profile, these elements or points must be individually verified. Such a procedure may be impracticable in certain cases, particularly where accuracy of the entire profile, rather than elements of a profile, is a design requirement. With profile tolerancing, the true profile may be defined by basic radii, basic angular dimensions, basic coordinate dimensions, basic size dimensions, undimensioned drawings, or formulas.

6.5.1 Profile Tolerancing. The profile tolerance specifies a uniform boundary along the true profile within which the elements of the surface must lie. It is used to control form or combinations of size, form, orientation, and location. Where used as a refinement of size, the profile tolerance must be contained within the size limits. Profile tolerances are specified as follows.

(a) An appropriate view or section is drawn showing the desired basic profile.

(b) Depending on design requirements, the tolerance may be divided bilaterally to both sides of the true profile or applied unilaterally to either side of the true profile. Where an equally disposed bilateral tolerance is intended, it is necessary to show only the feature control frame with a leader directed to the surface. For an unequally disposed or a unilateral tolerance, phantom lines are drawn parallel to the true profile to indicate the tolerance zone boundary. One end of a dimension line is extended to the feature control frame. The phantom line should extend only a sufficient distance to make its application clear. See Fig. 6-11.

(c) Where a profile tolerance applies all around the profile of a part, the symbol used to designate "all around" is placed on the leader from the feature control frame. See Fig. 6-12. Where segments of a profile have different tolerances, the extent of each profile tolerance may be indicated by the use of reference letters to identify the extremities or limits of each requirement. See Fig. 6-13. Similarly, if some segments of the profile are controlled by a profile tolerance and other segments by individually toleranced dimensions, the extent of the profile tolerance must be indicated. See Fig. 6-14.

6.5.2 Tolerance Zone. A profile tolerance may be applied to an entire surface or to individual pro-

Copyright ASME International
Provided by IHS under license with ASME
No reproduction or networking permitted without license from IHS
Not for Resale

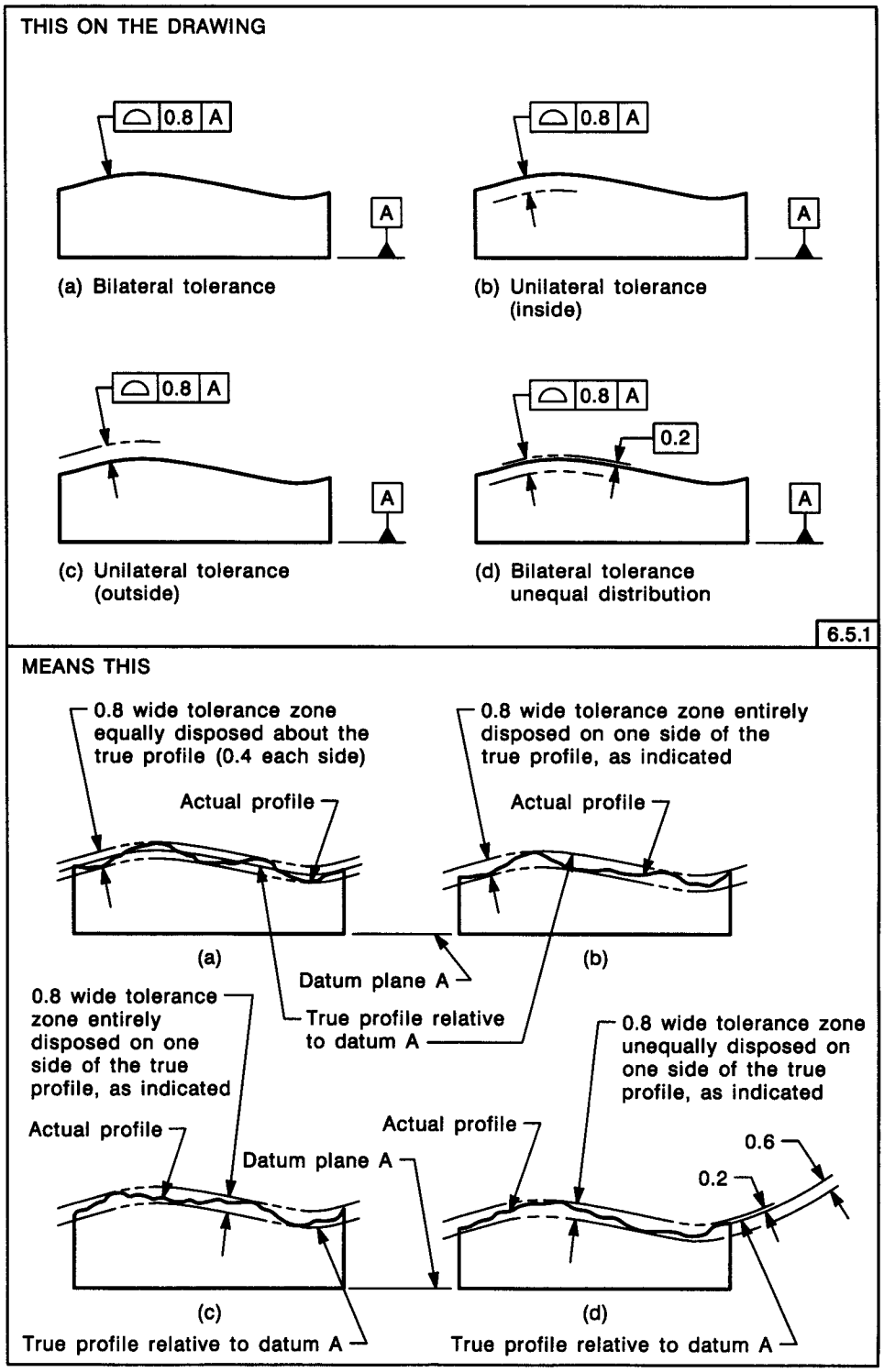

FIG. 6-11 APPLICATION OF PROFILE OF A SURFACE TOLERANCE TO A BASIC CONTOUR

Copyright ASME International
Provided by IHS under license with ASME
No reproduction or networking permitted without license from IHS
Not for Resale

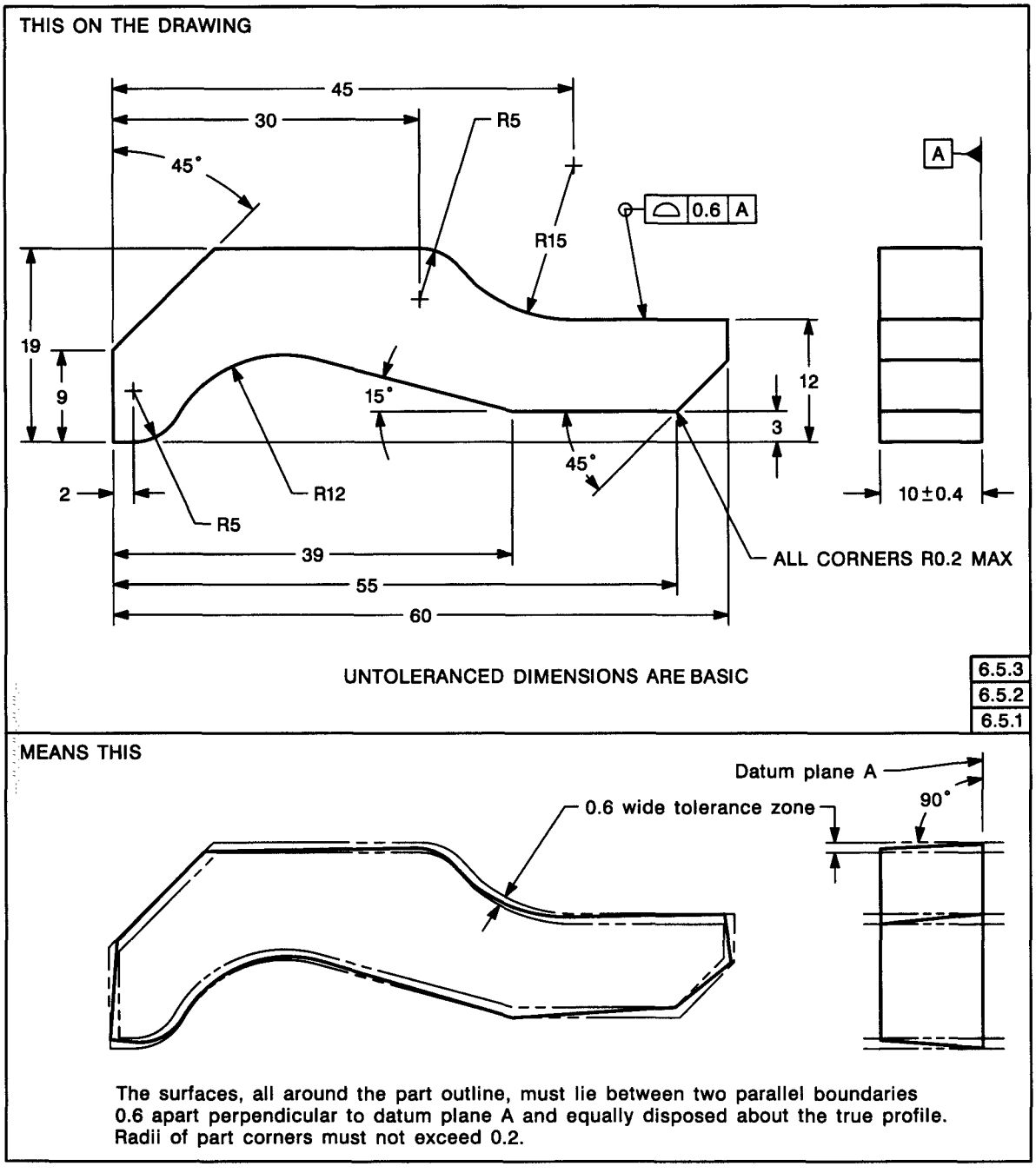

FIG. 6-12 SPECIFYING PROFILE OF A SURFACE ALL AROUND

Copyright ASME International
Provided by IHS under license with ASME
No reproduction or networking permitted without license from IHS
Not for Resale

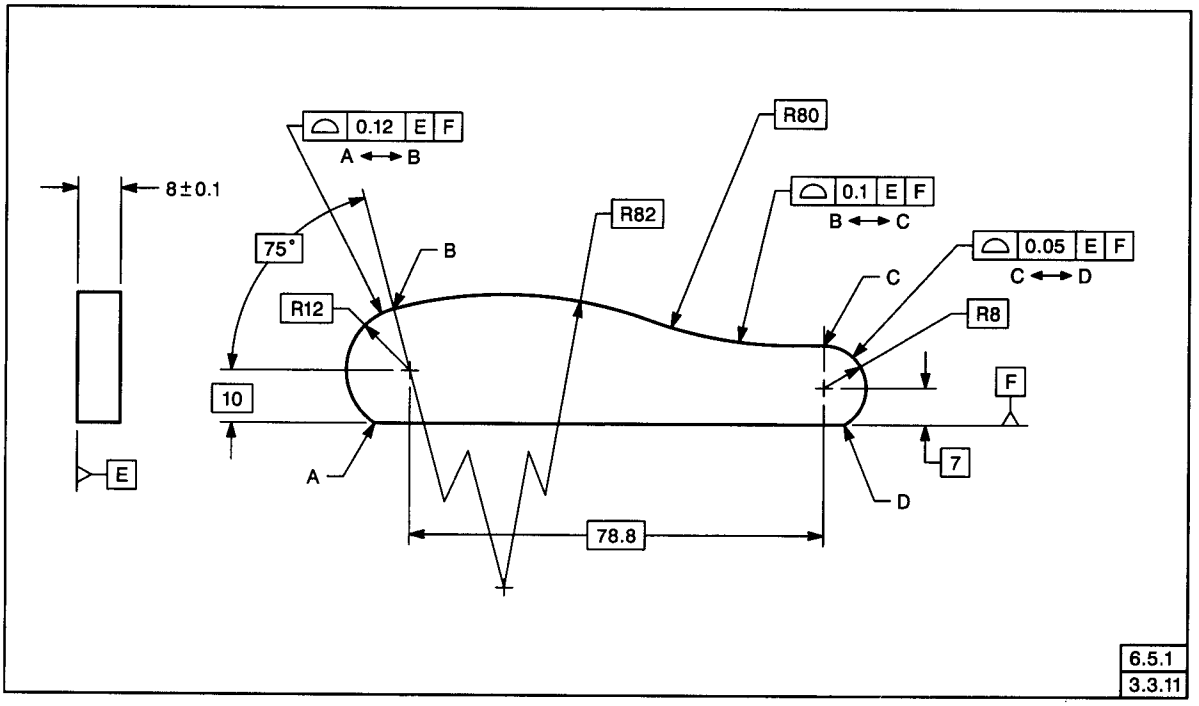

FIG. 6-13 SPECIFYING DIFFERENT PROFILE TOLERANCES ON SEGMENTS OF A PROFILE

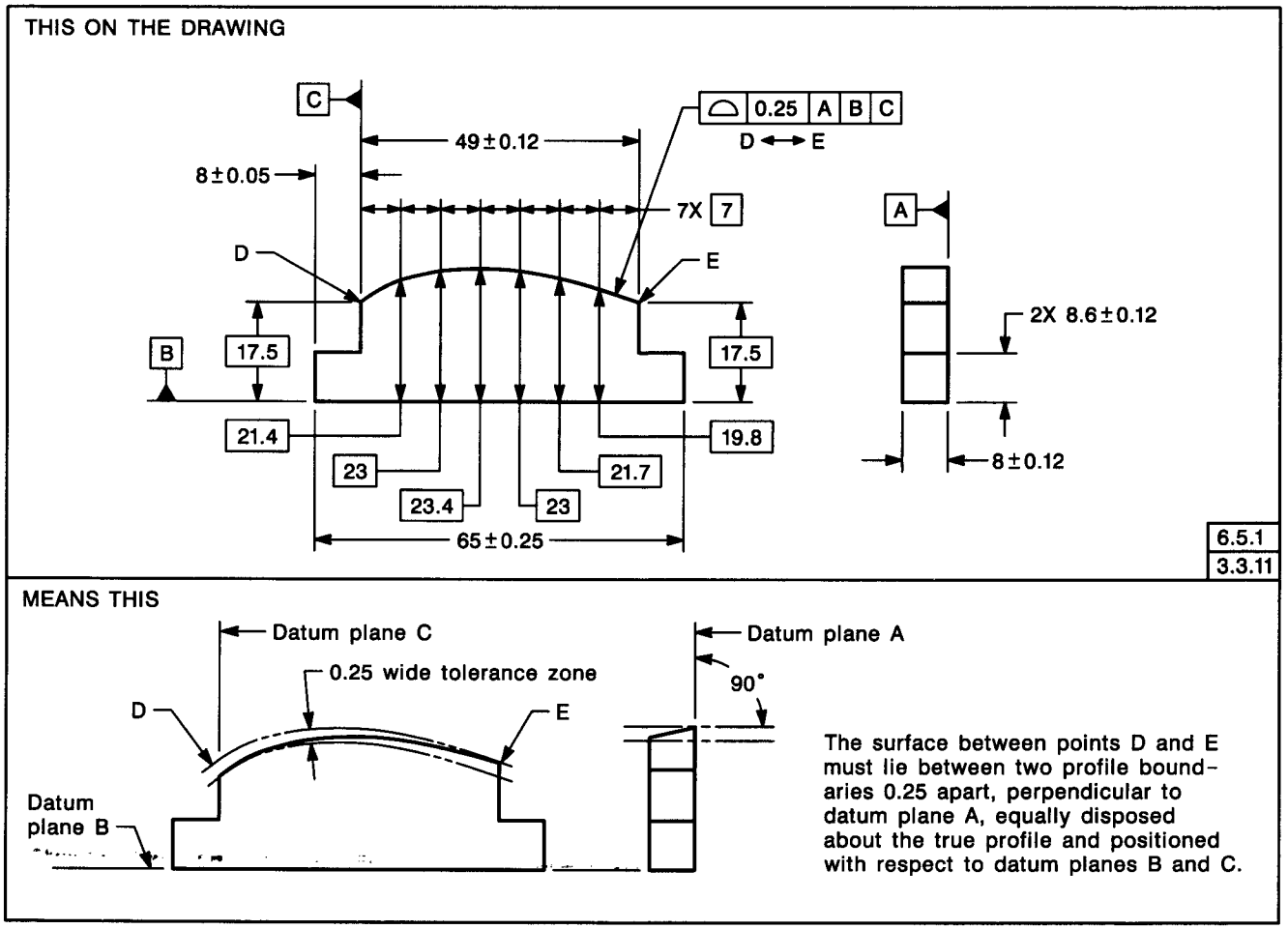

FIG. 6-14 SPECIFYING PROFILE OF A SURFACE BETWEEN POINTS

Copyright ASME International
Provided by IHS under license with ASME
No reproduction or networking permitted without license from IHS
Not for Resale

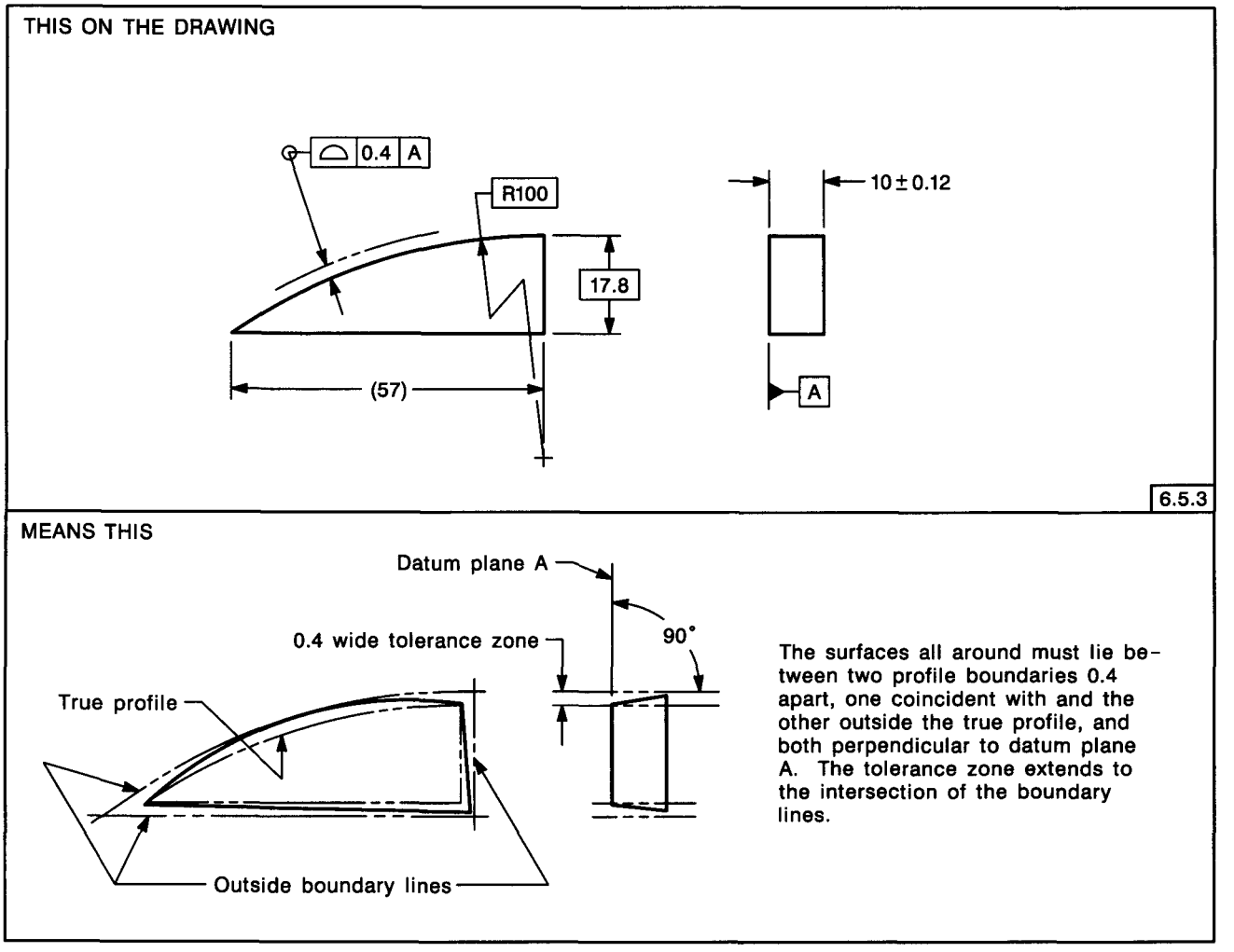

FIG. 6-15 SPECIFYING PROFILE OF A SURFACE FOR SHARP CORNERS

files taken at various cross sections through the part. These two cases are provided for as follows.

(a) Profile of a Surface. The tolerance zone established by the profile of a surface tolerance is three-dimensional, extending along the length and width (or circumference) of the considered feature or features. This may be applied to parts having a constant cross section as in Fig. 6-12, to parts having a surface of revolution, or to parts (such as castings) defined by profile tolerances applying "ALL OVER" as indicated below the feature control frame.

(b) Profile of a Line. The tolerance zone established by the profile of a line tolerance is two-dimensional, extending along the length of the considered feature. This applies to the profiles of parts having a varying cross section, such as the tapered wing of an aircraft, or to random cross sections of parts as in Fig. 6-18, where it is not desired to control the entire surface of the feature as a single entity.

6.5.3 Explanation of Profile Tolerance. The tolerance value represents the distance between two boundaries equally or unequally disposed about the true profile or entirely disposed on one side of the true profile. Profile tolerances apply normal (perpendicular) to the true profile at all points along the profile. The boundaries of the tolerance zone follow the geometric shape of the true profile. The actual surface or line element must be within the specified tolerance zone, and all variations from the true profile must blend. Where a profile tolerance encompasses a sharp corner, the tolerance zone extends to the intersection of the boundary lines. See Fig. 6-15. Since the intersecting surfaces may lie anywhere within the converging zone, the actual part contour could conceivably be rounded. If this is undesirable, the drawing must indicate the design requirements, such as by specifying the maximum radius. See Fig. 6-12.

Copyright ASME International
Provided by IHS under license with ASME
No reproduction or networking permitted without license from IHS
Not for Resale

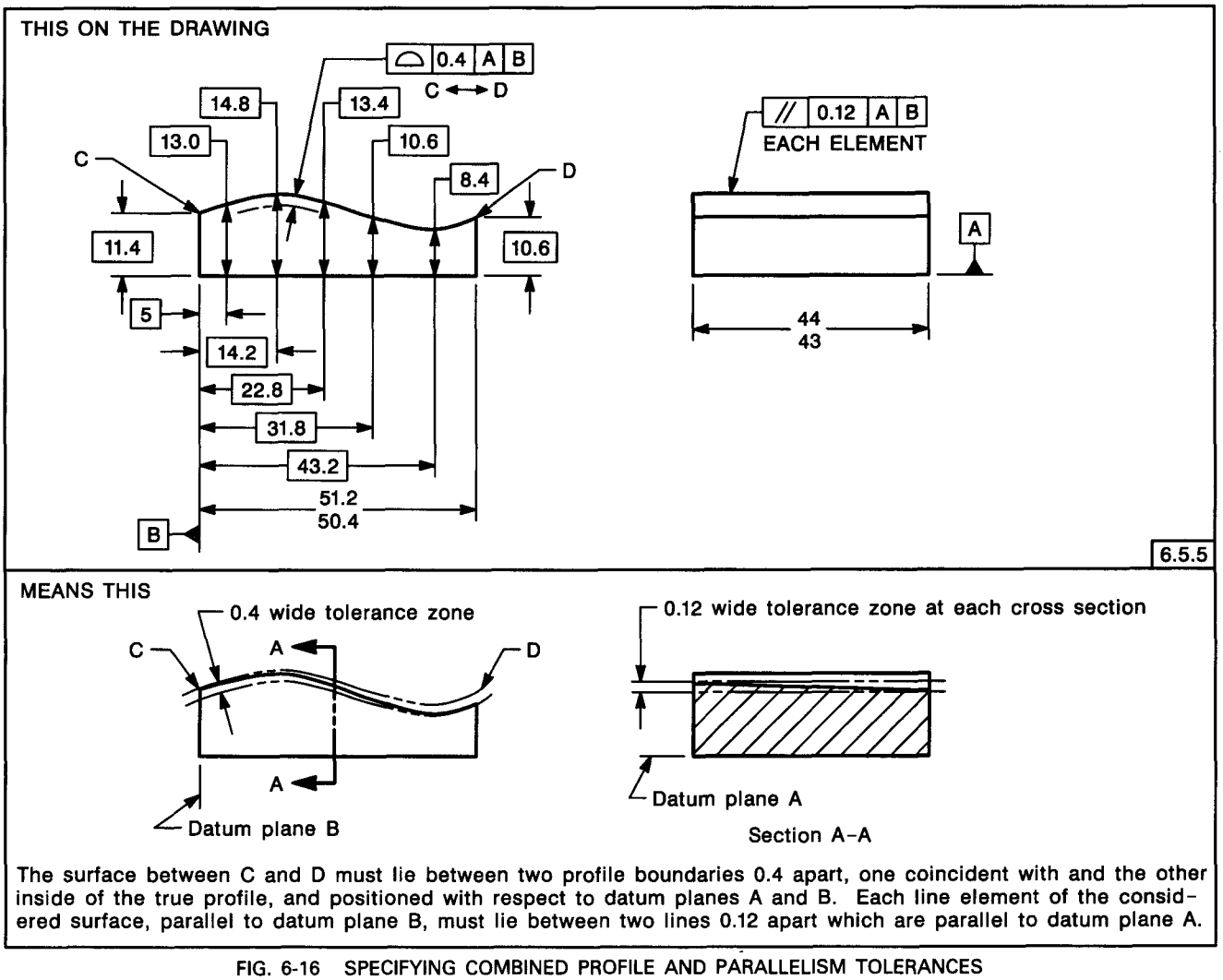

FIG. 6-16 SPECIFYING COMBINED PROFILE AND PARALLELISM TOLERANCES

6.5.4 Application of Datums. In most cases, profile of a surface tolerance requires reference to datums in order to provide proper orientation, location, or both, of the profile. With profile of a line tolerance, datums may be used under some circumstances but would not be used when the only requirement is the profile shape taken cross section by cross section. An example is the shape of a continuous extrusion.

6.5.5 Combined Controls. Profile tolerancing may be combined with other types of geometric tolerancing. Figure 6-16 illustrates a surface that has a profile tolerance refined by a parallelism tolerance. The surface must not only be within the profile tolerance, but each straight line element of the surface must also be parallel to the datum within the tolerance specified. Figure 6-17 illustrates a surface that has a profile tolerance refined by a runout tolerance. The entire surface must be within the profile tolerance and the circular elements must be within the specified runout tolerance. Figure 6-18 illustrates a part with a profile of a line tolerance where size is controlled by a separate tolerance. Line elements of the surface along the profile must lie within the profile tolerance zone and within a size limiting zone. In certain instances, a portion of the profile tolerance zone may fall beyond the boundary of the size limiting zone. However, this portion of the profile tolerance zone is not usable because the line elements of the surface must not violate the size limiting zone.

6.5.5.1 Boundary Control for a Noncylindrical Feature. Profile tolerancing may be combined with positional tolerancing where it is necessary to control the boundary of a noncylindrical feature. See Fig 6-19. In this example, the basic dimensions and the profile tolerance establish a tolerance zone to control the shape and size of the feature. Additionally, the positional tolerance establishes a

Copyright ASME International
Provided by IHS under license with ASME
No reproduction or networking permitted without license from IHS
Not for Resale

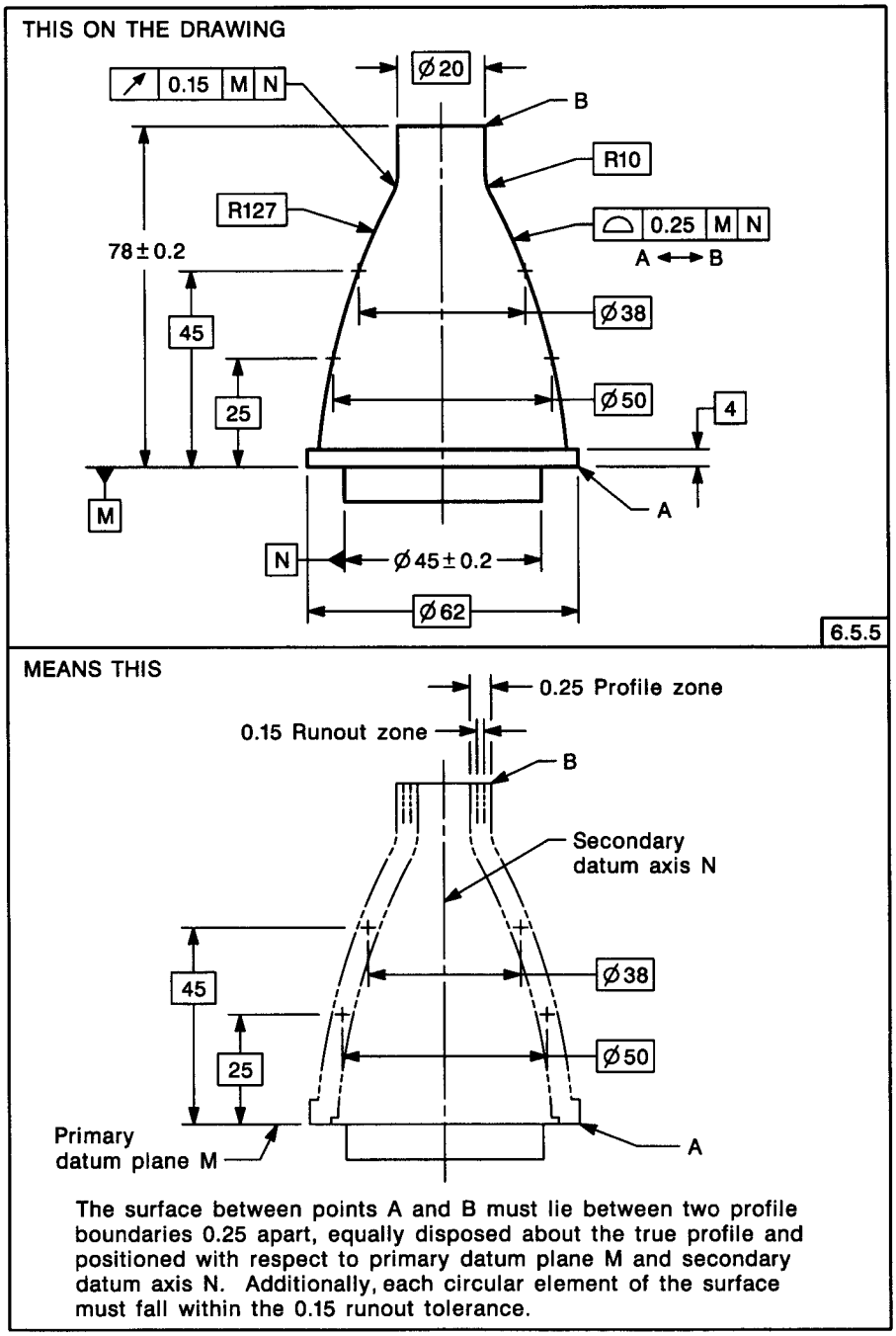

FIG. 6-17 PROFILE OF A SURFACE OF REVOLUTION

Copyright ASME International
Provided by IHS under license with ASME
No reproduction or networking permitted without license from IHS
Not for Resale

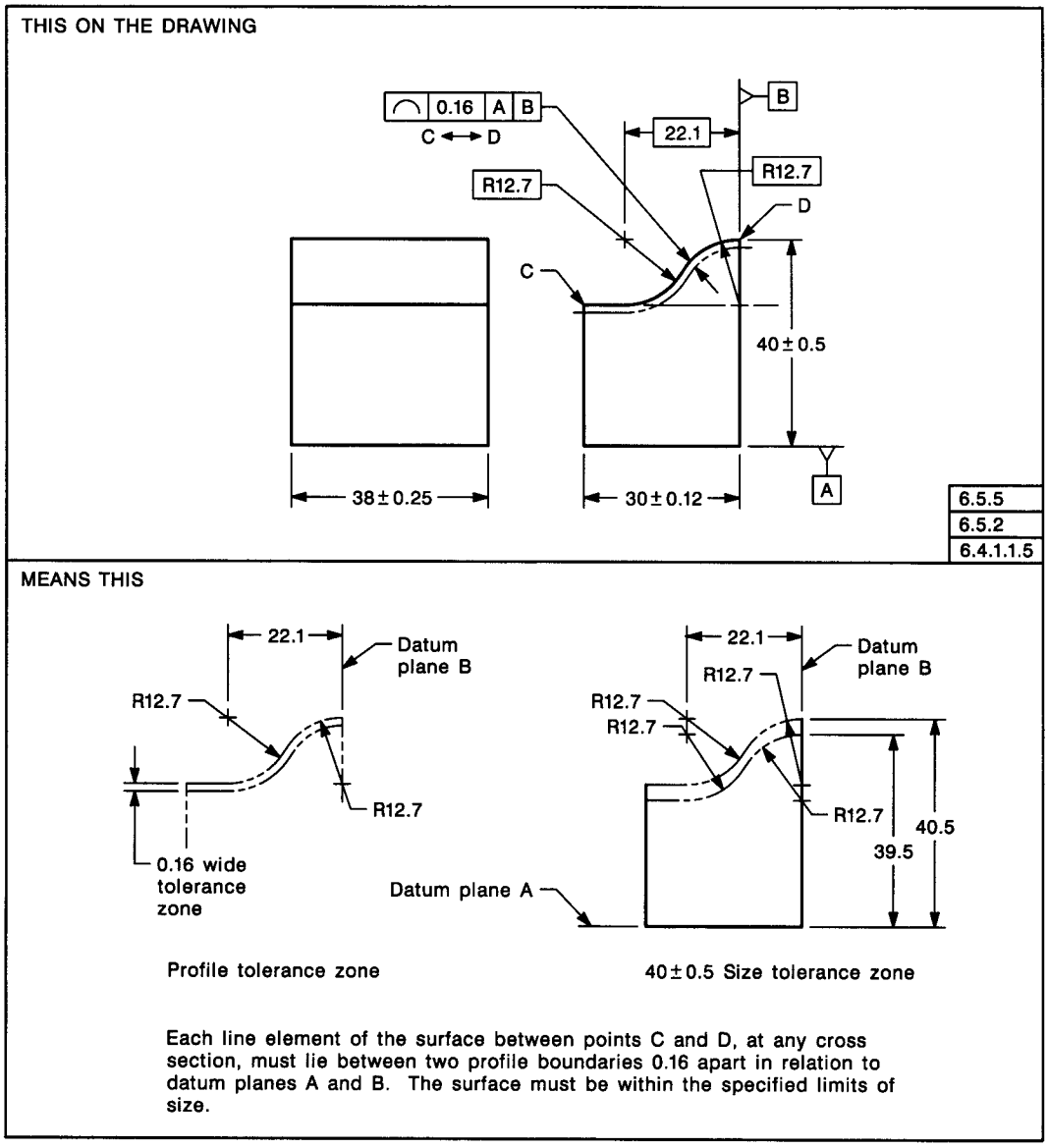

FIG. 6-18 PROFILE OF A LINE AND SIZE CONTROL

Copyright ASME International
Provided by IHS under license with ASME
No reproduction or networking permitted without license from IHS
Not for Resale

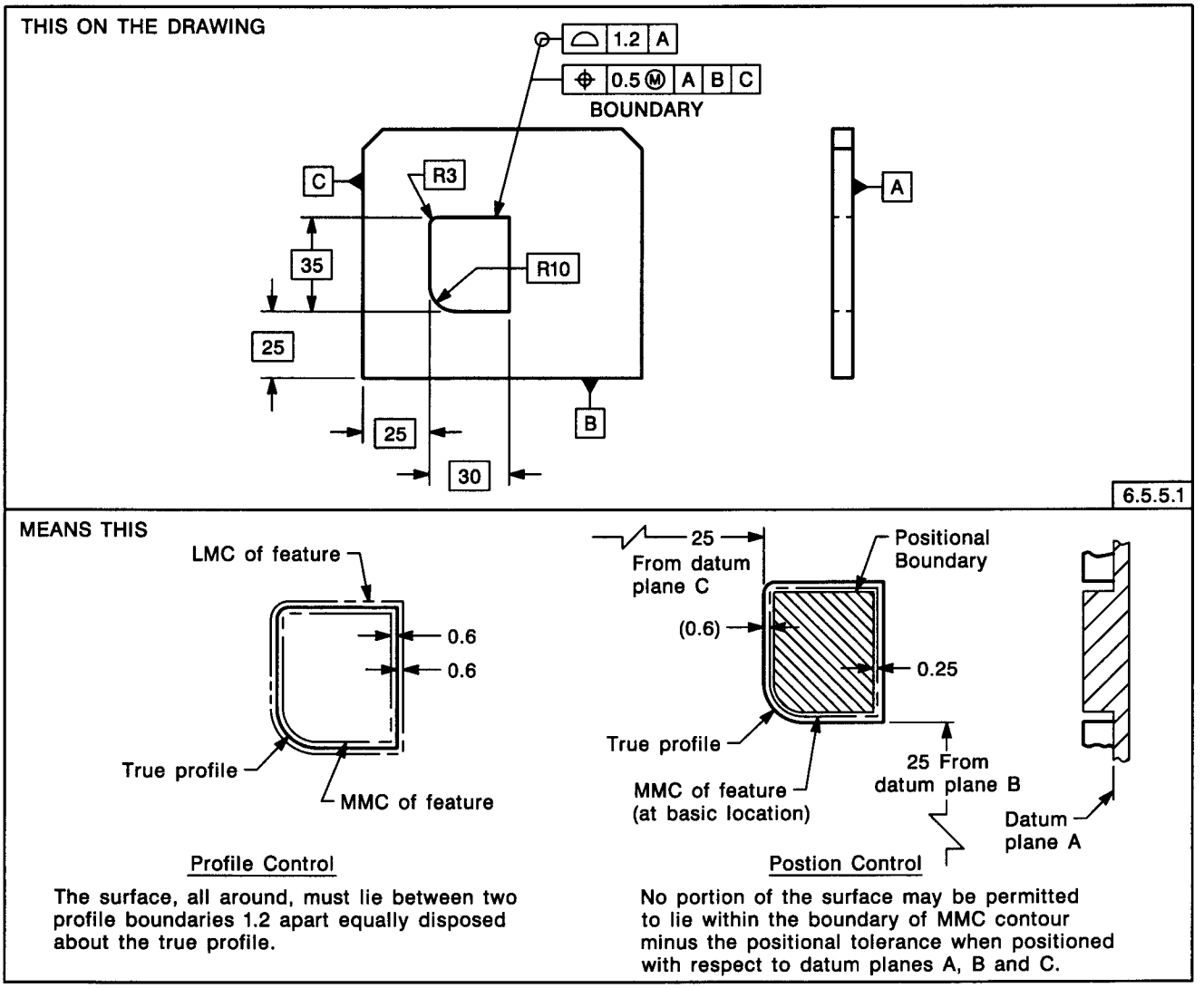

FIG. 6-19 BOUNDARY PRINCIPLE USED WITH PROFILE CONTROLS

theoretical boundary shaped identically to the basic profile. For an internal feature, the boundary equals the MMC size of the profile minus the positional tolerance, and the entire feature surface must lie outside the boundary. For an external feature, the boundary equals the MMC size of the profile plus the positional tolerance, and the entire feature surface must lie within the boundary. To invoke this concept, the term BOUNDARY is placed beneath the positional tolerance feature control frame.

6.5.6 Coplanarity. *Coplanarity* is the condition of two or more surfaces having all elements in one plane.

6.5.6.1 Profile Tolerance For Coplanar Surfaces. A profile of a surface tolerance may be used where it is desired to treat two or more surfaces as a single interrupted or noncontinuous surface. In this case, a control is provided similar to that achieved by a flatness tolerance applied to a single plane surface. As shown in Fig. 6-20, the profile of a surface tolerance establishes a tolerance zone defined by two parallel planes within which the considered surfaces must lie. No datum reference is stated in Fig. 6-20, as in the case of flatness, since the orientation of the tolerance zone is established from contact of the part against a reference standard; the plane is established by the considered surfaces themselves. Where two or more surfaces are involved, it may be desirable to identify which specific surface(s) are to be used as the datum feature(s). Datum feature symbols are applied to these surfaces with the appropriate tolerance for their relationship to each other. The datum reference letters are added to the feature control frame

Copyright ASME International
Provided by IHS under license with ASME
No reproduction or networking permitted without license from IHS
Not for Resale

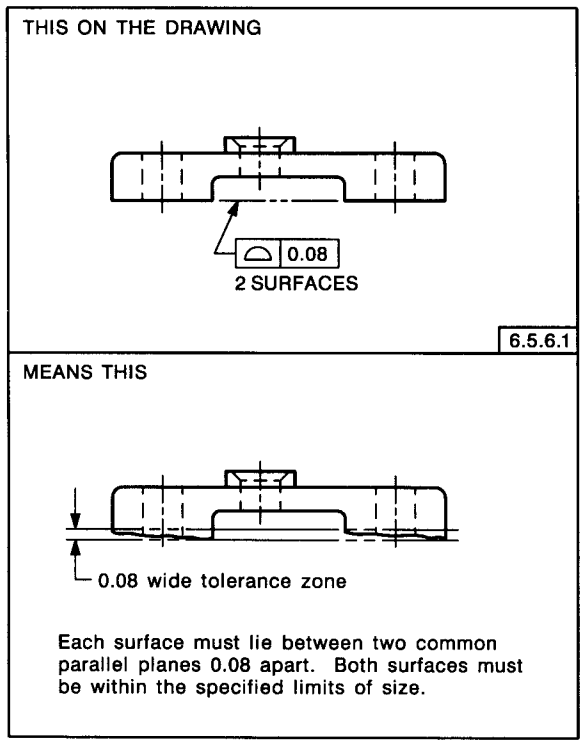

FIG. 6-20 SPECIFYING PROFILE OF A SURFACE FOR COPLANAR SURFACES

for the features being controlled. The tolerance zone thus established applies to all coplanar surfaces including datum surfaces. See Fig. 6-21.

6.5.7 Profile Tolerance for Plane Surfaces. Profile tolerancing may be used to control form and orientation of plane surfaces. In Fig. 6-22, profile of a surface is used to control a plane surface inclined to a datum feature.

6.5.8 Profile Tolerance for a Conical Feature. A profile tolerance may be specified to control the conicity of a surface in either of two ways: as an independent control of form, or as a combined control of form and orientation. Figure 6-23 depicts a conical feature controlled by a profile of a surface tolerance where conicity of the surface is a refinement of size. In Fig. 6-24, the same control is applied but is oriented to a datum axis. In each case, the feature must be within size limits.

6.5.9 Composite Profile. Where design requirements permit a feature locating tolerance zone to be larger than the tolerance zone that controls the feature size, a composite profile tolerance may be used.

6.5.9.1 Composite Profile Tolerancing. This provides a composite application of profile tolerancing for location of a profiled feature as well as the requirement of form, orientation, and in some instances, the size of the feature, within the larger profile locating tolerance zone. Requirements are annotated by the use of a composite profile feature control frame similar to that shown in Fig. 3-22(a). Each complete horizontal segment of a composite profile feature control frame constitutes a separately verifiable component of a pair of interrelated requirements. The profile symbol is entered once and is applicable to both horizontal segments. The upper segment is referred to as the profile locating control. It specifies the larger profile tolerance for the location of the profiled feature. Applicable datums are specified in a desired order of precedence. The lower segment is referred to as a profile size/form/orientation refinement control. It specifies the smaller profile tolerance for the feature within the profile locating zone (form and orientation refinement).

6.5.9.1.1 Explanation of Composite Profile Tolerance. Each feature is located from specified datums by basic dimensions. Datum referencing in the upper segment of a composite profile feature control frame serves to locate the feature profile locating tolerance zone relative to specified datums. See Figs. 6-25 and 6-26. Datum referencing in the lower segment serves to establish the limits of size, form, and orientation of the profile form/orientation tolerance zone, relative to the profile locating tolerance zone. See Figs. 6-25 and 6-26. The tolerance values represent the distance between two boundaries disposed about the true profile as defined by the basic dimensions and respective applicable datums. The actual surface of the controlled feature must lie within both the profile locating tolerance zone and the profile form/orientation tolerance zone.

6.5.9.1.2 Control of Orientation. Other applications for composite profile tolerancing occur when the upper segment of the feature control frame contains only an orientation datum(s). It specifies the larger profile tolerance for the orientation of the profiled feature. Applicable datums are specified in a desired order of precedence. The lower segment is a form refinement control and does not specify a datum. It specifies the smaller profile tolerance for the feature within the profile orientation zone (form refinement).

Copyright ASME International
Provided by IHS under license with ASME
No reproduction or networking permitted without license from IHS
Not for Resale

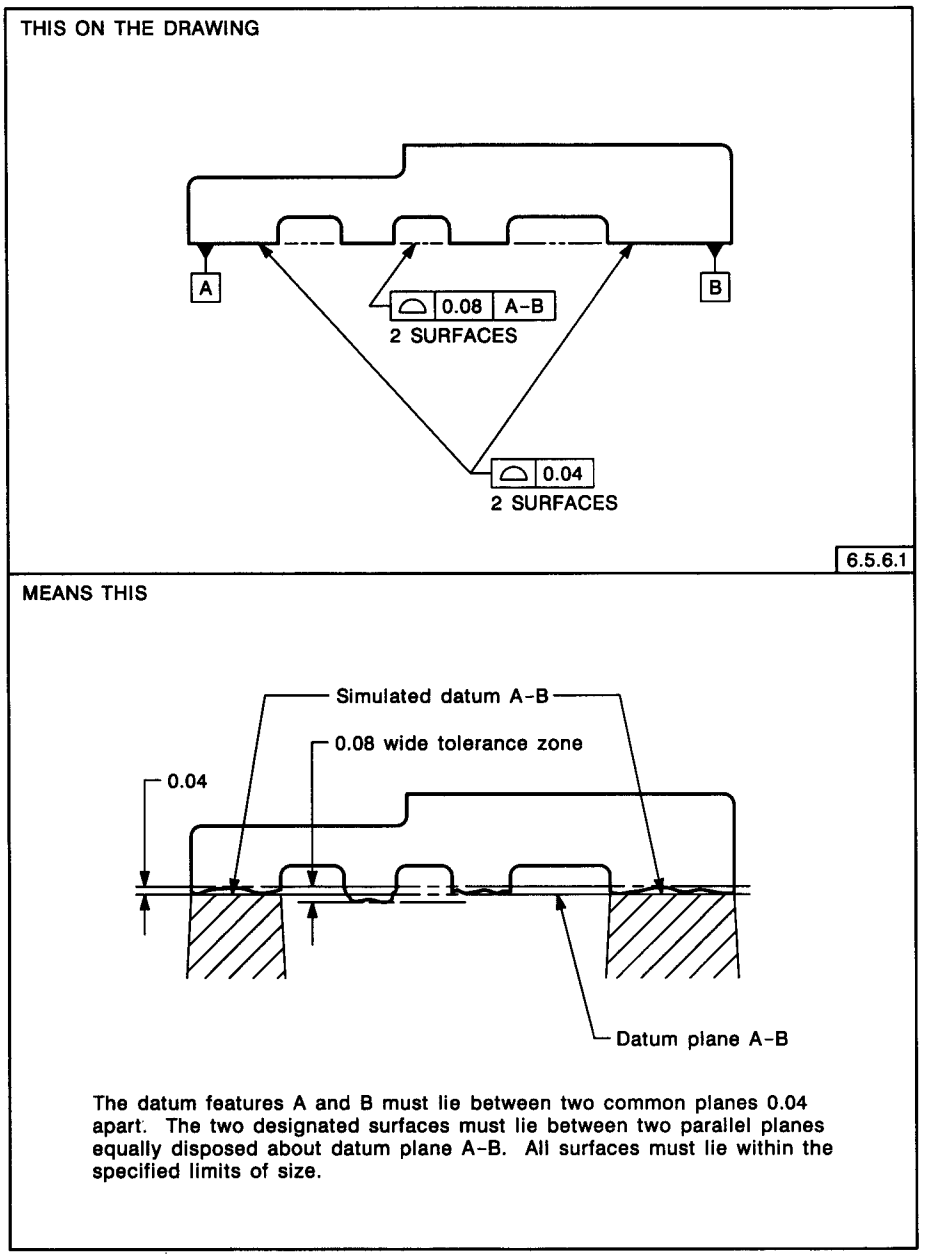

FIG. 6-21 SPECIFYING PROFILE OF A SURFACE FOR COPLANAR SURFACES TO A DATUM ESTABLISHED BY TWO SURFACES

Copyright ASME International
Provided by IHS under license with ASME
No reproduction or networking permitted without license from IHS
Not for Resale

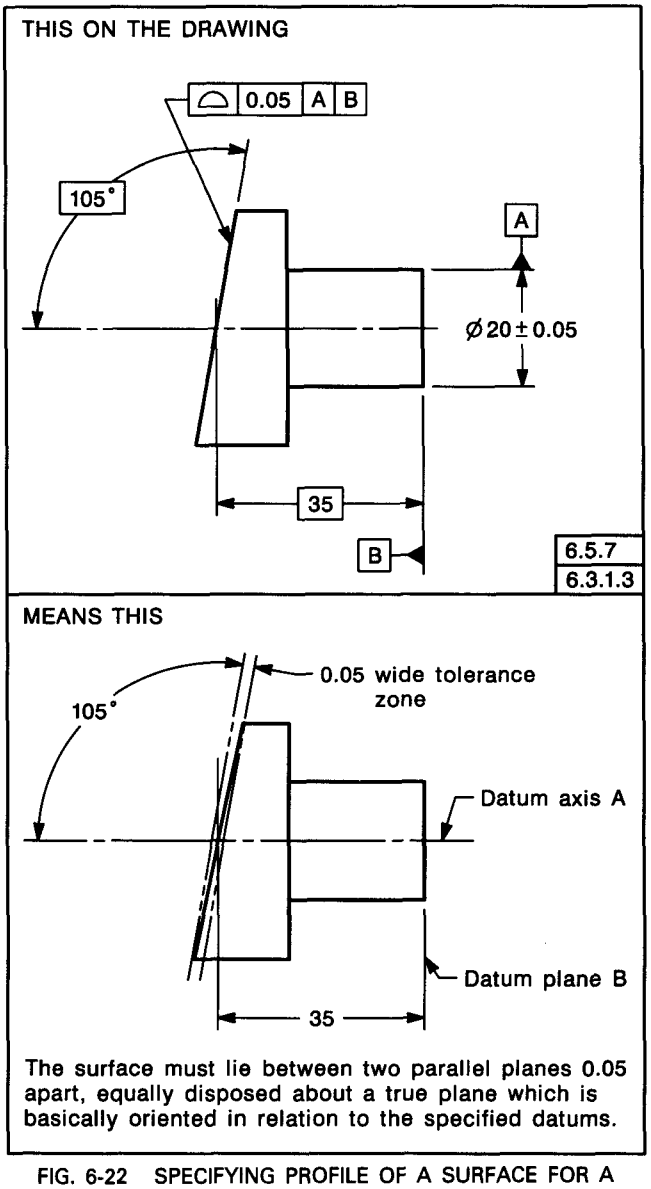

FIG. 6-22 SPECIFYING PROFILE OF A SURFACE FOR A PLANE SURFACE

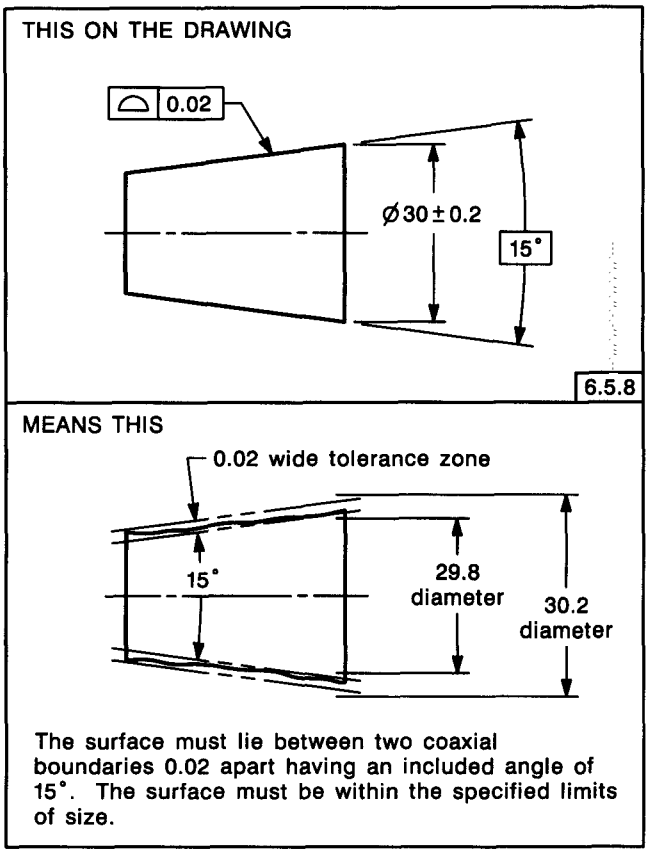

FIG. 6-23 SPECIFYING PROFILE OF A CONICAL FEATURE

6.6 ORIENTATION TOLERANCES

Angularity, parallelism, perpendicularity, and in some instances, profile are orientation tolerances applicable to related features. These tolerances control the orientation of features to one another.

6.6.1 Specifying Orientation Tolerances in Relation to Datum Features. In specifying orientation tolerances to control angularity, parallelism, perpendicularity, and in some cases, profile, the considered feature is related to one or more datum features. See Fig. 4-24. Relation to more than one datum feature is specified to stabilize the tolerance zone in more than one direction. For a method of referencing datum features, see para. 3.4.2. Note that angularity, perpendicularity, and parallelism, when applied to plane surfaces, control flatness if a flatness tolerance is not specified.

6.6.1.1 Tolerance Zones. Tolerance zones are total in value requiring an axis, or all elements of the considered surface, to fall within this zone. Where it is a requirement to control only individual line elements of a surface, a qualifying notation, such as EACH ELEMENT or EACH RADIAL ELEMENT, is added to the drawing. See Figs. 6-44 and 6-45. This permits control of individual elements of the surface independently in relation to the datum and does not limit the total surface to an encompassing zone.

6.6.1.2 Application of Zero Tolerance at MMC. Where no variations of orientation, such as perpendicularity, are permitted at the MMC size limit of a feature, the feature control frame contains a zero for the tolerance, modified by the symbol for MMC. If the feature is finished at its MMC limit of size, it must be perfect in orientation with respect to the datum. A tolerance can exist only as the feature departs from MMC. The allowable orientation toler-

Copyright ASME International
Provided by IHS under license with ASME
No reproduction or networking permitted without license from IHS
Not for Resale

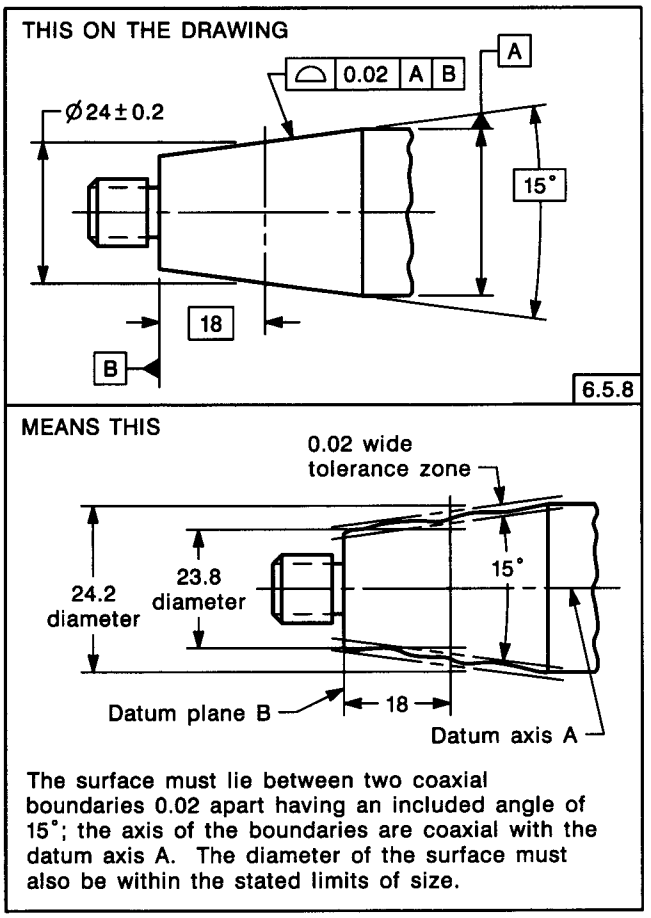

FIG. 6-24 PROFILE TOLERANCING OF A CONICAL FEATURE, DATUM RELATED

ance is equal to the amount of such departure. See Figs. 6-41 and 6-42.

6.6.1.3 Tangent Plane. Where it is desired to control a feature surface established by the contacting points of that surface, the tangent plane symbol is added in the feature control frame after the stated tolerance. See Fig. 6-43.

6.6.2 Angularity. *Angularity* is the condition of a surface, center plane, or axis at a specified angle (other than 90°) from a datum plane or axis.

6.6.2.1 Angularity Tolerance. An angularity tolerance specifies one of the following:

(a) a tolerance zone defined by two parallel planes at the specified basic angle from one or more datum planes or a datum axis, within which the surface or center plane of the considered feature must lie. See Fig. 6-27.

(b) a tolerance zone defined by two parallel planes at the specified basic angle from one or more datum planes or a datum axis, within which the axis of the considered feature must lie. See Fig. 6-28.

(c) a cylindrical tolerance zone at the specified basic angle from one or more datum planes or a datum axis, within which the axis of the considered feature must lie. See Fig. 6-29.

(d) a tolerance zone defined by two parallel lines at the specified basic angle from a datum plane or axis, within which the line element of the surface must lie.

6.6.3 Parallelism. *Parallelism* is the condition of a surface or center plane, equidistant at all points from a datum plane; or an axis, equidistant along its length from one or more datum planes or a datum axis.

6.6.3.1 Parallelism Tolerance. A parallelism tolerance specifies one of the following:

(a) a tolerance zone defined by two parallel planes parallel to a datum plane or axis, within which the surface or center plane of the considered feature must lie. See Fig. 6-30.

(b) a tolerance zone defined by two parallel planes parallel to a datum plane or axis, within which the axis of the considered feature must lie. See Fig. 6-31.

(c) a cylindrical tolerance zone parallel to one or more datum planes or a datum axis, within which the axis of the feature must lie. See Figs. 6-32 and 6-33.

(d) a tolerance zone defined by two parallel lines parallel to a datum plane or axis, within which the line element of the surface must lie. See Fig. 6-45.

6.6.4 Perpendicularity. *Perpendicularity* is the condition of a surface, center plane, or axis at a right angle to a datum plane or axis.

6.6.4.1 Perpendicularity Tolerance. A perpendicularity tolerance specifies one of the following:

(a) a tolerance zone defined by two parallel planes perpendicular to a datum plane or axis, within which the surface or center plane of the considered feature must lie. See Figs. 6-34 through 6-36.

(b) a tolerance zone defined by two parallel planes perpendicular to a datum axis, within which the axis of the considered feature must lie. See Fig. 6-37.

(c) a cylindrical tolerance zone perpendicular to a datum plane, within which the axis of the considered feature must lie. See Figs. 6-38 through 6-42.

(d) a tolerance zone defined by two parallel lines perpendicular to a datum plane or axis, within which the line element of the surface must lie. See Fig. 6-44.

Copyright ASME International
Provided by IHS under license with ASME
No reproduction or networking permitted without license from IHS
Not for Resale

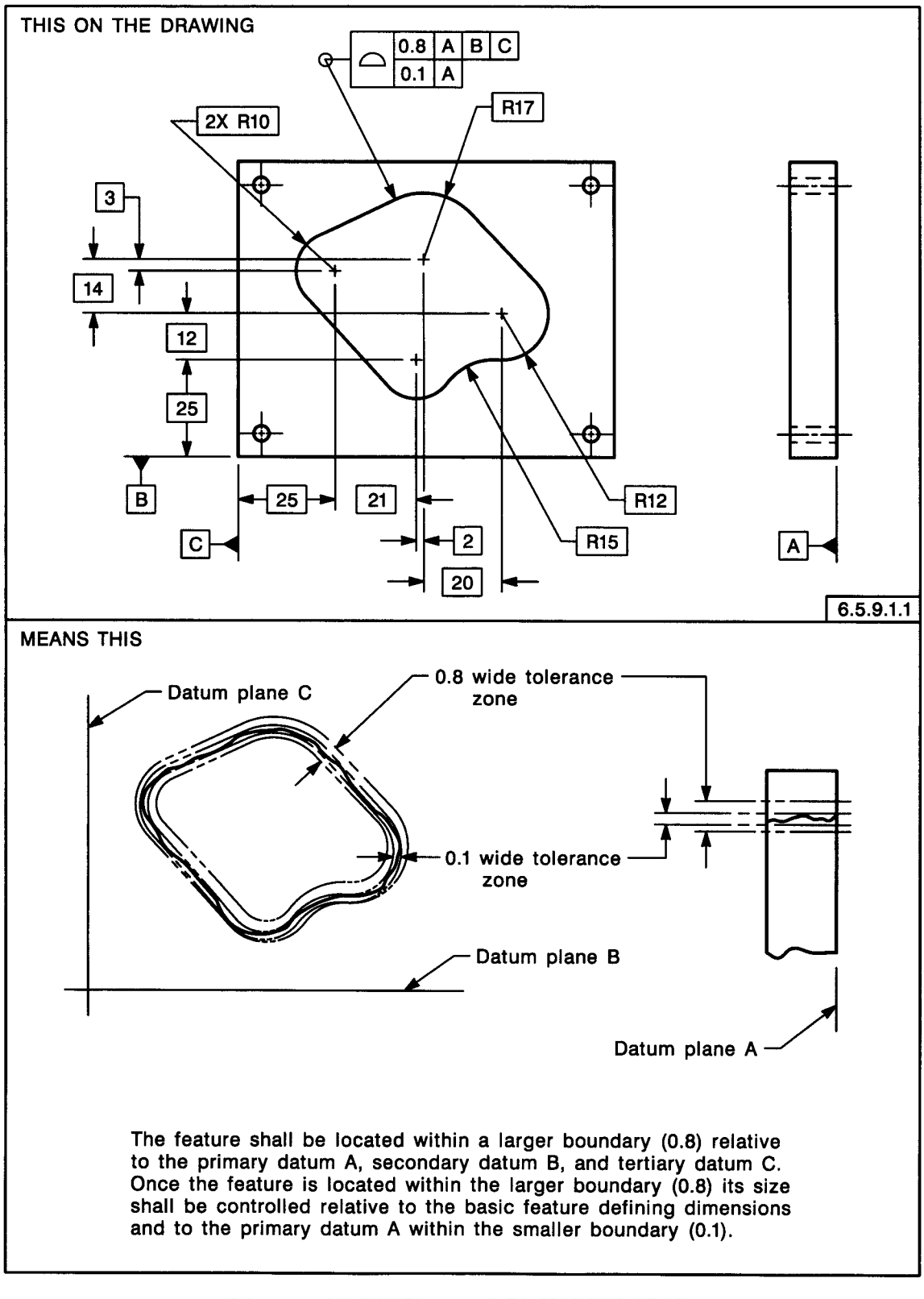

FIG. 6-25 COMPOSITE PROFILE TOLERANCING OF AN IRREGULAR SURFACE

Copyright ASME International
Provided by IHS under license with ASME
No reproduction or networking permitted without license from IHS
Not for Resale

THIS ON THE DRAWING

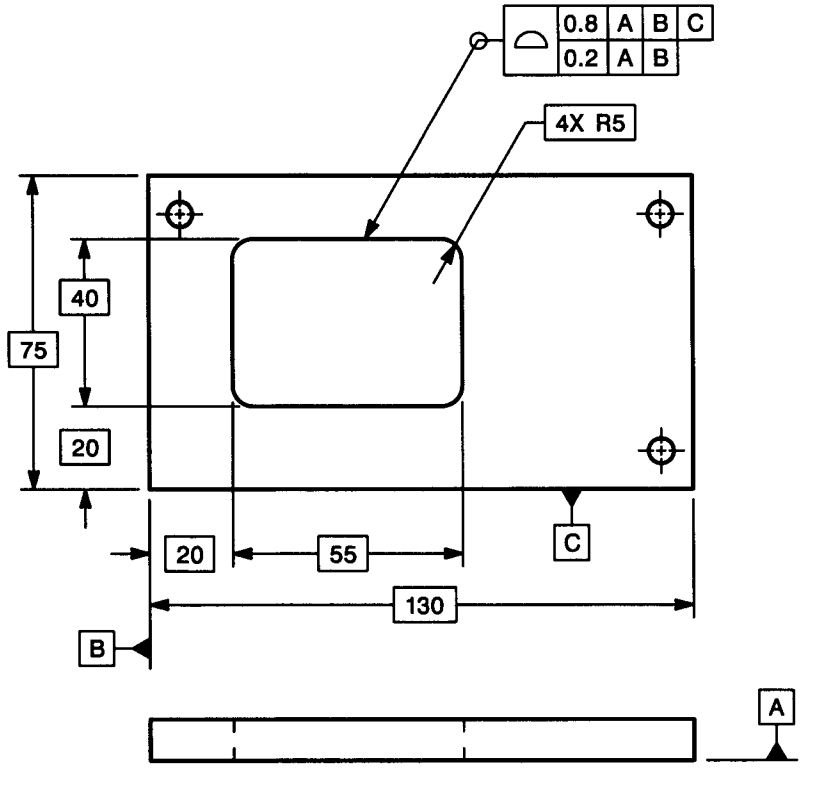

6.5.9.1.1

MEANS THIS

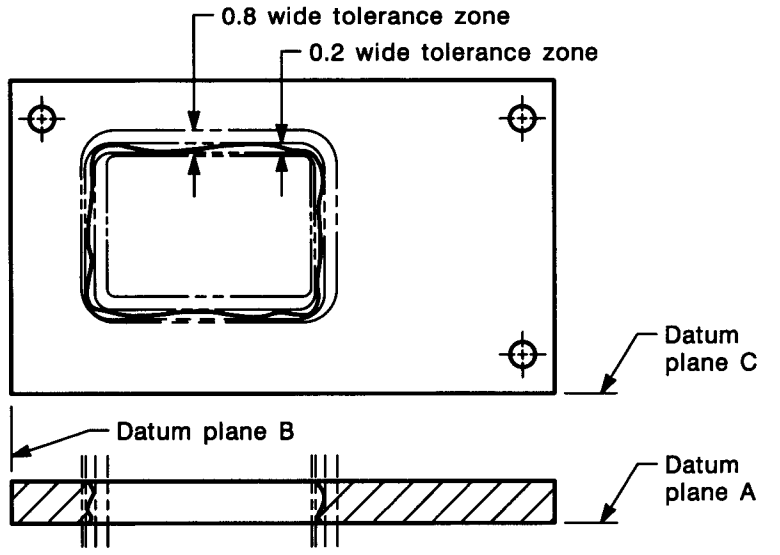

The feature shall be located within a larger boundary (0.8) relative to the primary datum A, secondary datum B, and tertiary datum C. Once the feature is located within the larger boundary (0.8) its size shall be controlled relative to the basic feature defining dimensions and to the primary datum A for perpendicularity and secondary datum B for parallelism within the smaller boundary (0.2).

FIG. 6-26 COMPOSITE PROFILE TOLERANCING OF A FEATURE

Copyright ASME International
Provided by IHS under license with ASME
No reproduction or networking permitted without license from IHS
Not for Resale

THIS ON THE DRAWING

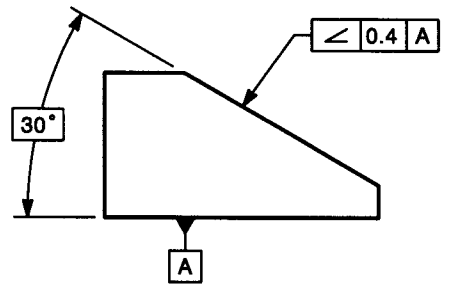

6.6.2.1
2.12

MEANS THIS

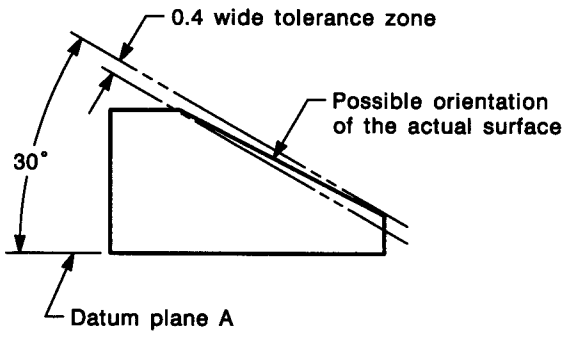

The surface must lie between two parallel planes 0.4 apart which are inclined at 30° to datum plane A. The surface must be within the specified limits of size. See figure 2-14.

FIG. 6-27 SPECIFYING ANGULARITY FOR A PLANE SURFACE

THIS ON THE DRAWING

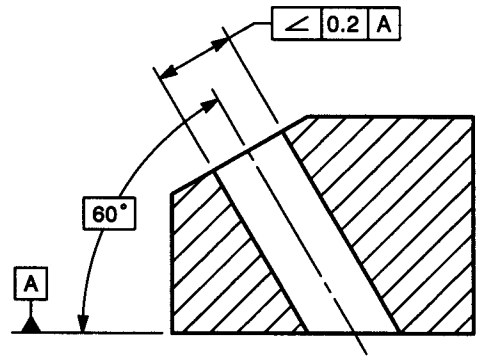

6.6.2.1

MEANS THIS

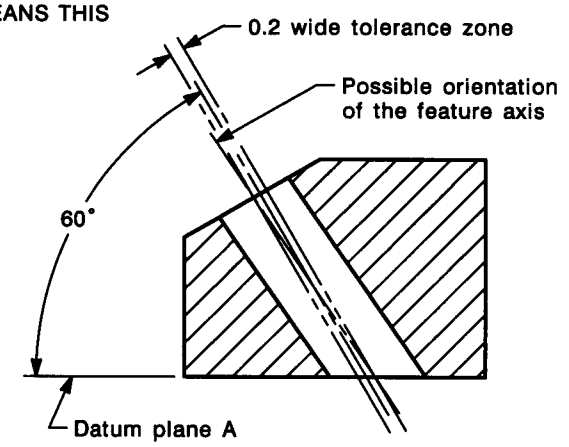

Regardless of feature size, the feature axis must lie between two parallel planes 0.2 apart which are inclined 60° to datum plane A. The feature axis must be within the specified tolerance of location.

Note: This control applies only to the view on which it is specified.

FIG. 6-28 SPECIFYING ANGULARITY FOR AN AXIS (FEATURE RFS)

Copyright ASME International
Provided by IHS under license with ASME
No reproduction or networking permitted without license from IHS
Not for Resale

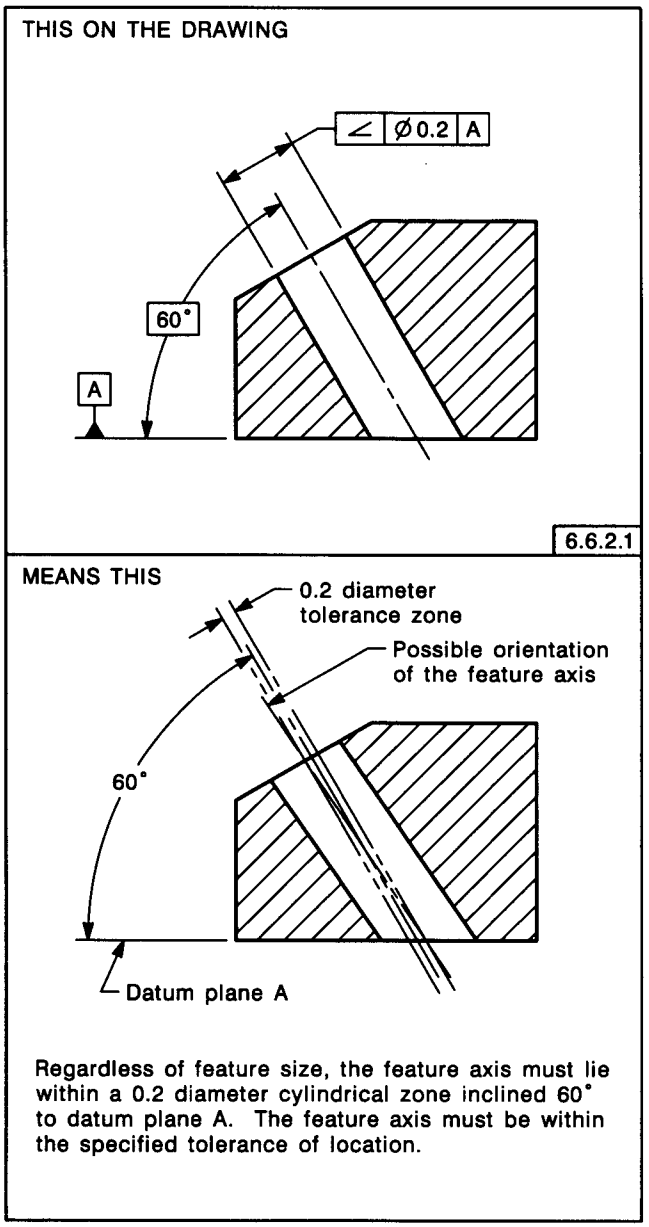

FIG. 6-29 SPECIFYING ANGULARITY FOR AN AXIS (FEATURE RFS)

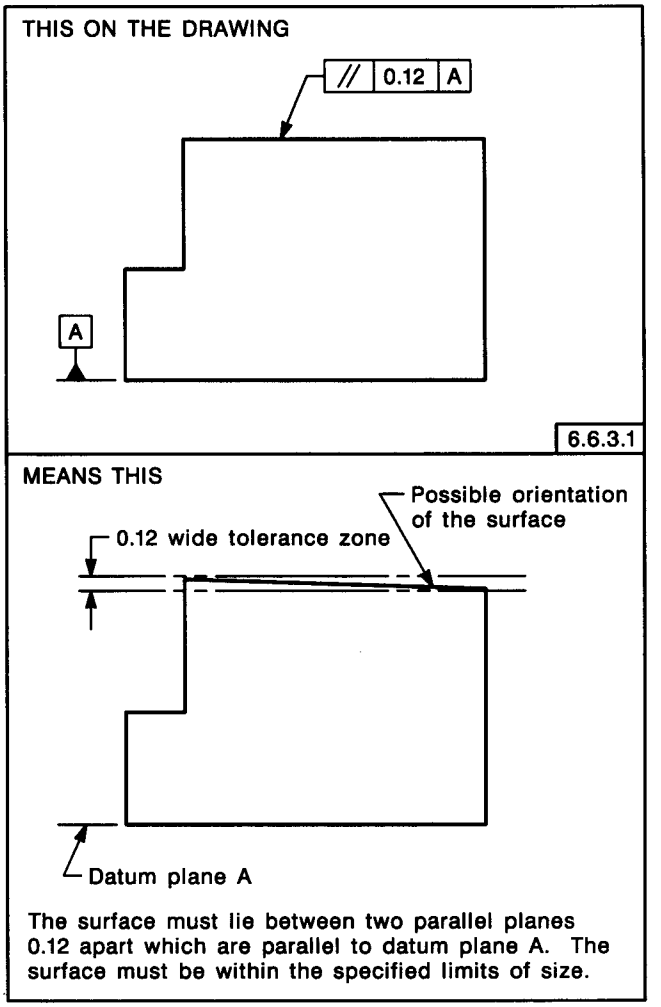

FIG. 6-30 SPECIFYING PARALLELISM FOR A PLANE SURFACE

Copyright ASME International
Provided by IHS under license with ASME
No reproduction or networking permitted without license from IHS
Not for Resale

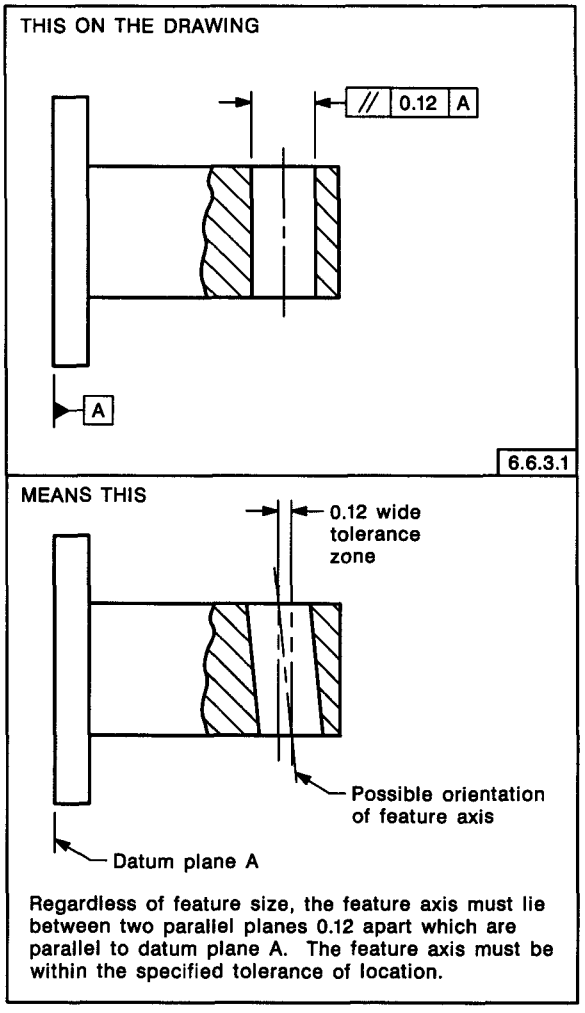

FIG. 6-31 SPECIFYING PARALLELISM FOR AN AXIS (FEATURE RFS)

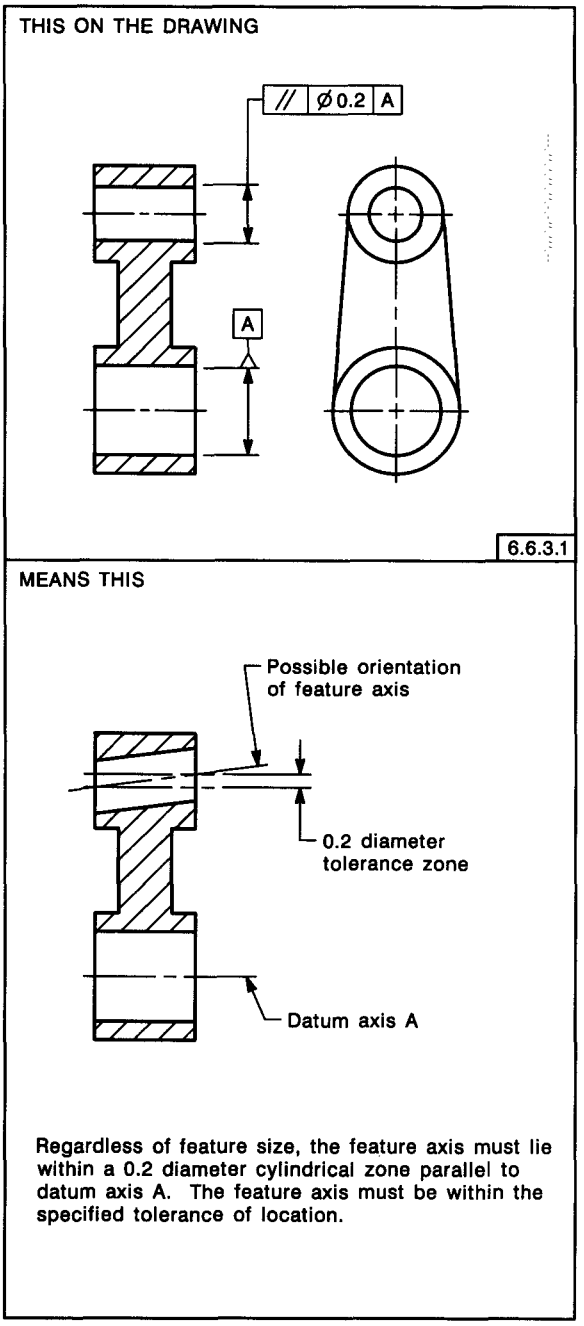

FIG. 6-32 SPECIFYING PARALLELISM FOR AN AXIS (BOTH FEATURE AND DATUM FEATURE RFS)

Copyright ASME International
Provided by IHS under license with ASME
No reproduction or networking permitted without license from IHS
Not for Resale

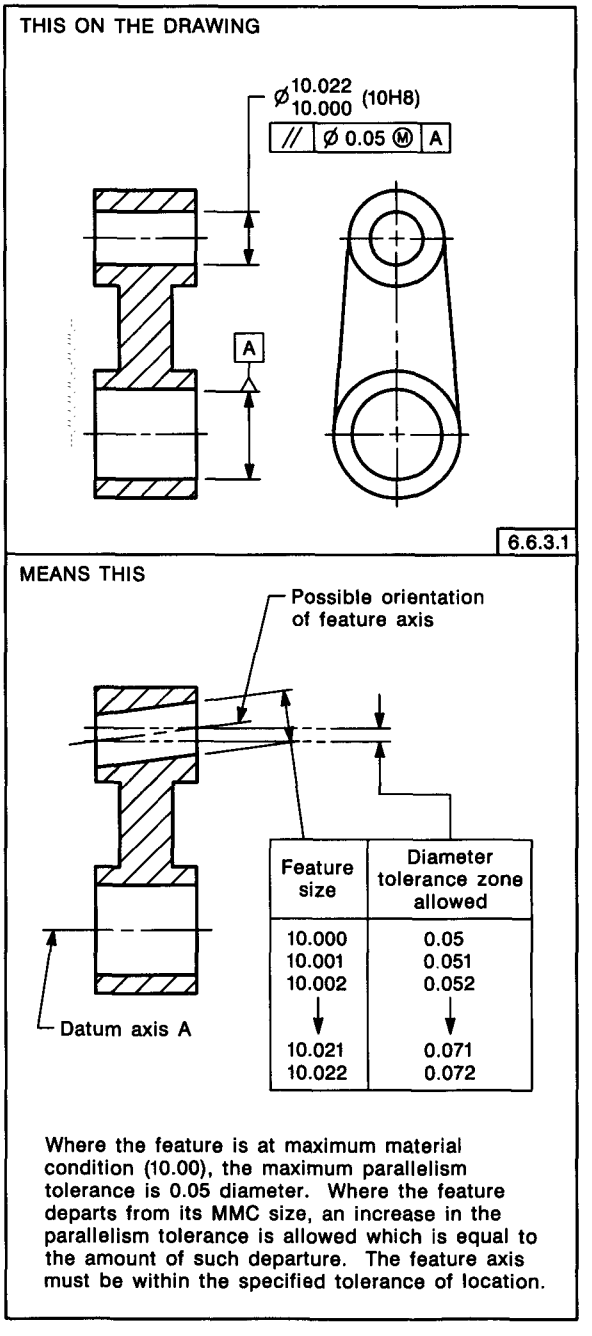

FIG. 6-33 SPECIFYING PARALLELISM FOR AN AXIS (FEATURE AT MMC AND DATUM FEATURE RFS)

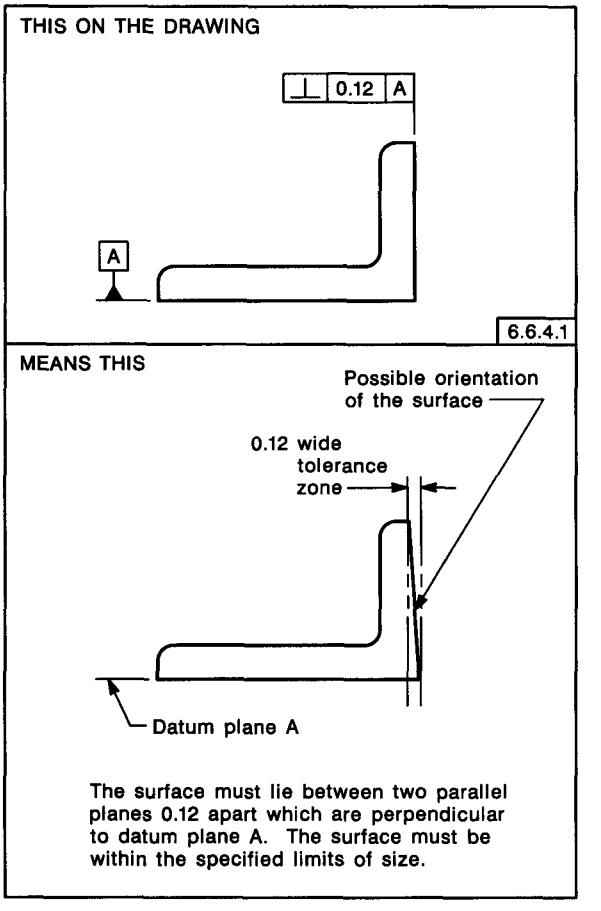

FIG. 6-34 SPECIFYING PERPENDICULARITY FOR A PLANE SURFACE

Copyright ASME International
Provided by IHS under license with ASME
No reproduction or networking permitted without license from IHS
Not for Resale

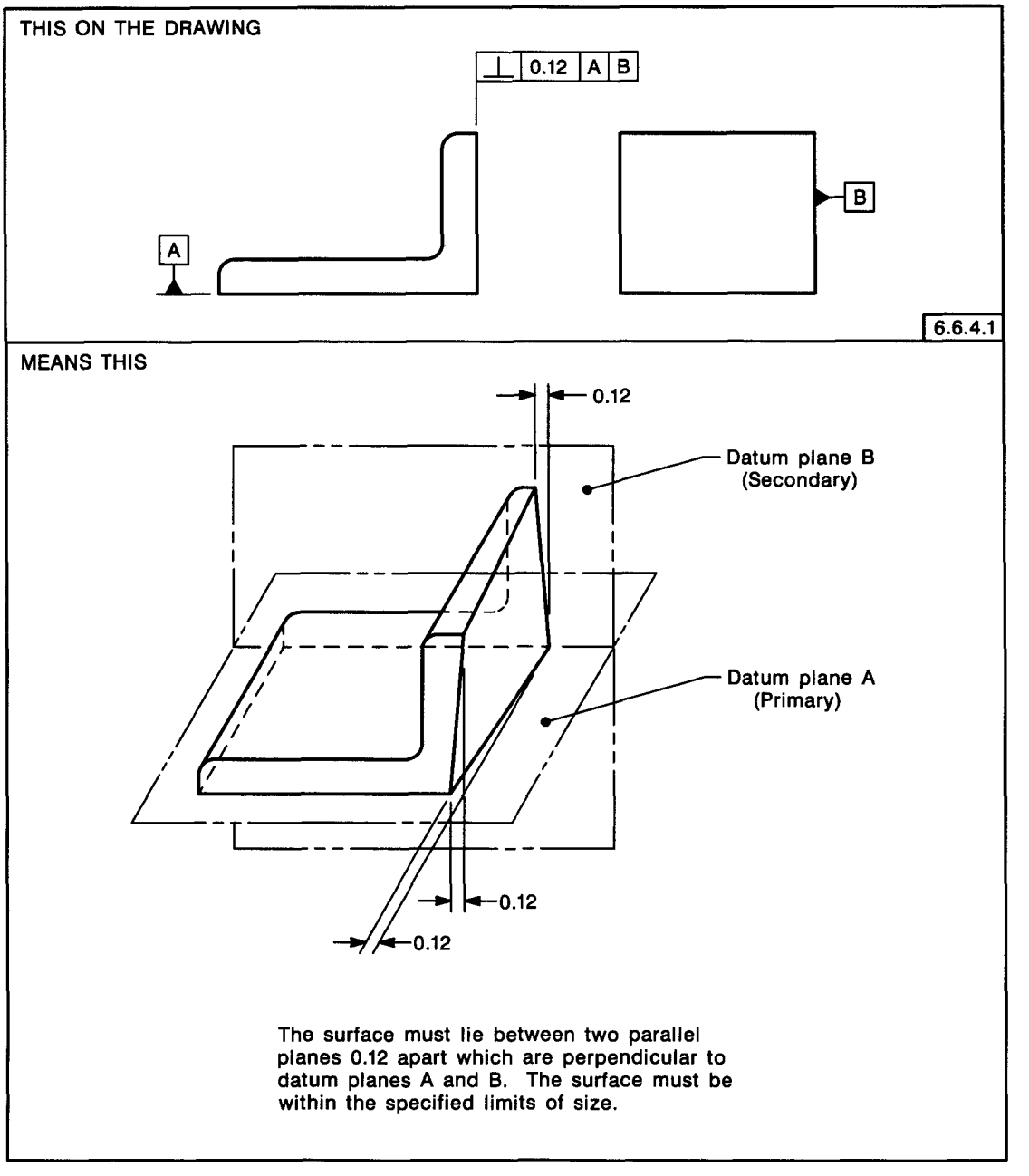

FIG. 6-35 SPECIFYING PERPENDICULARITY FOR A PLANE SURFACE RELATIVE TO TWO DATUMS

Copyright ASME International
Provided by IHS under license with ASME
No reproduction or networking permitted without license from IHS
Not for Resale

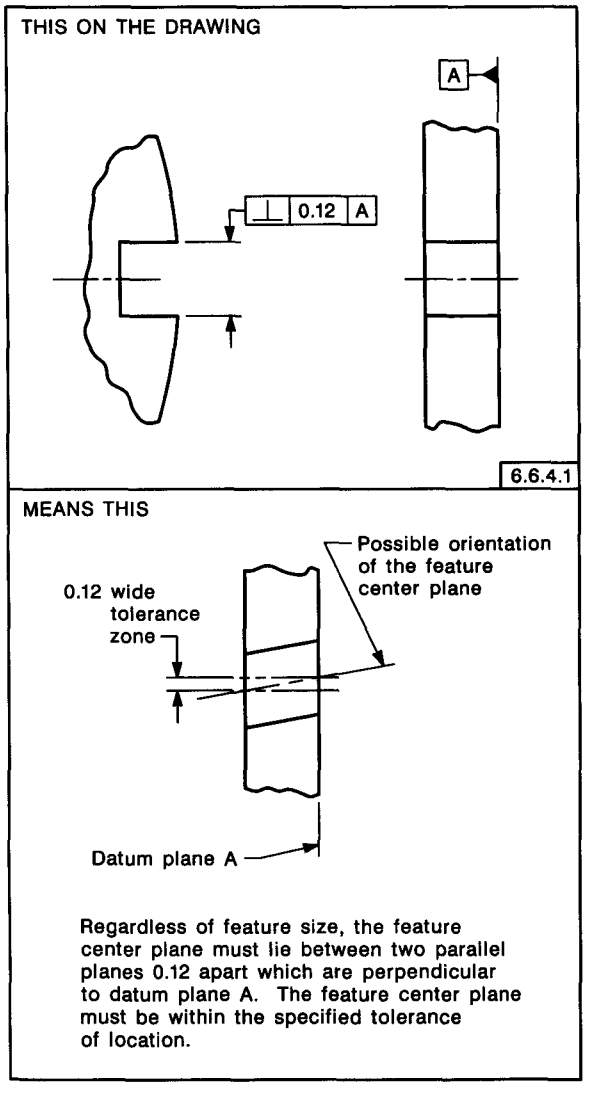

FIG. 6-36 SPECIFYING PERPENDICULARITY FOR A CENTER PLANE (FEATURE RFS)

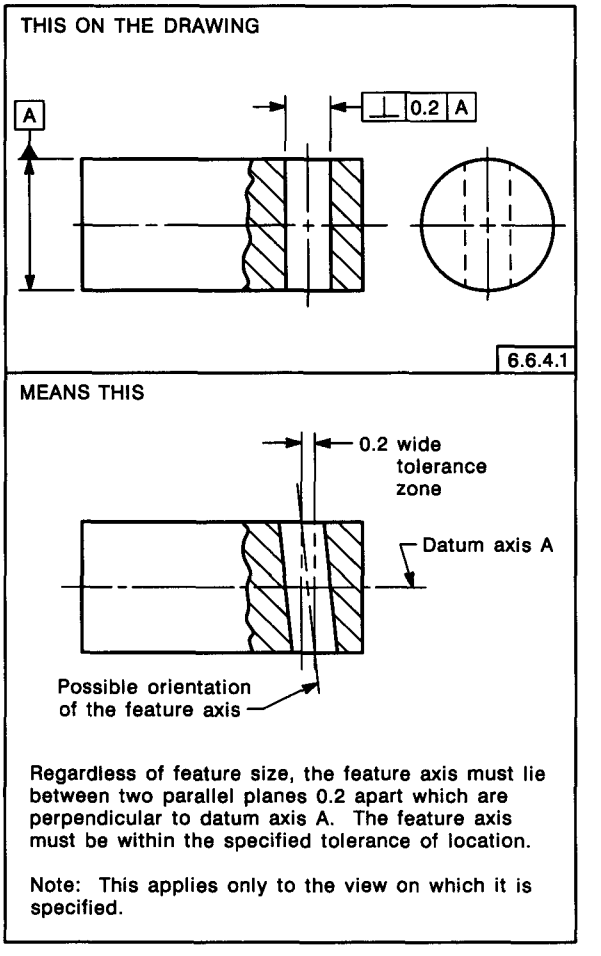

FIG. 6-37 SPECIFYING PERPENDICULARITY FOR AN AXIS (BOTH FEATURE AND DATUM FEATURE RFS)

Copyright ASME International
Provided by IHS under license with ASME
No reproduction or networking permitted without license from IHS
Not for Resale

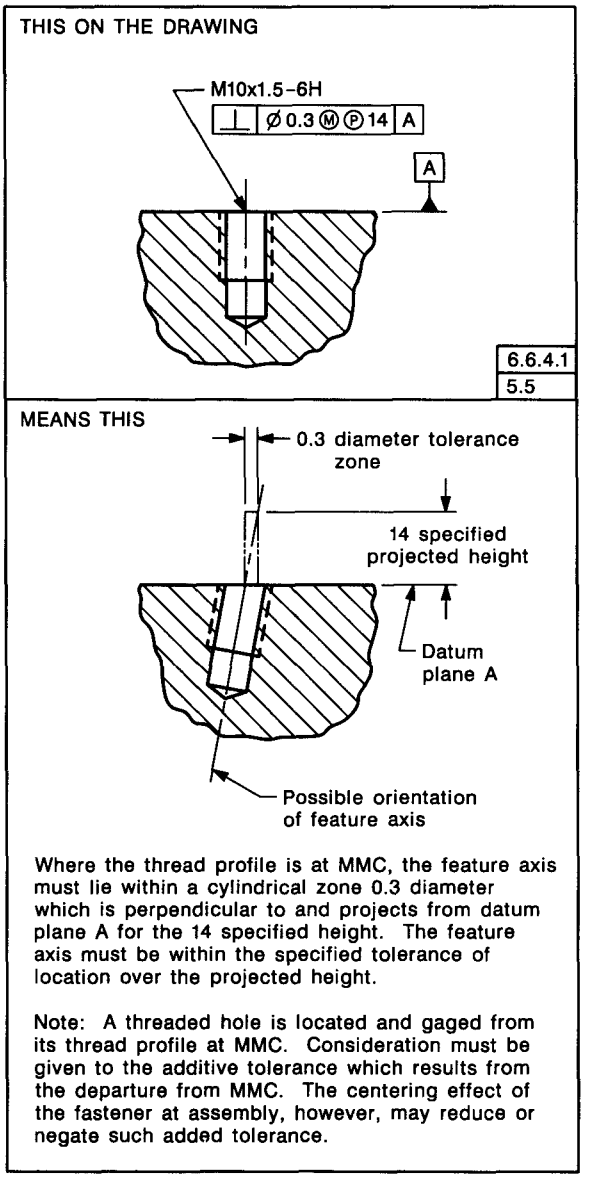

FIG. 6-38 SPECIFYING PERPENDICULARITY FOR AN AXIS AT A PROJECTED HEIGHT (THREADED HOLE OR INSERT AT MMC)

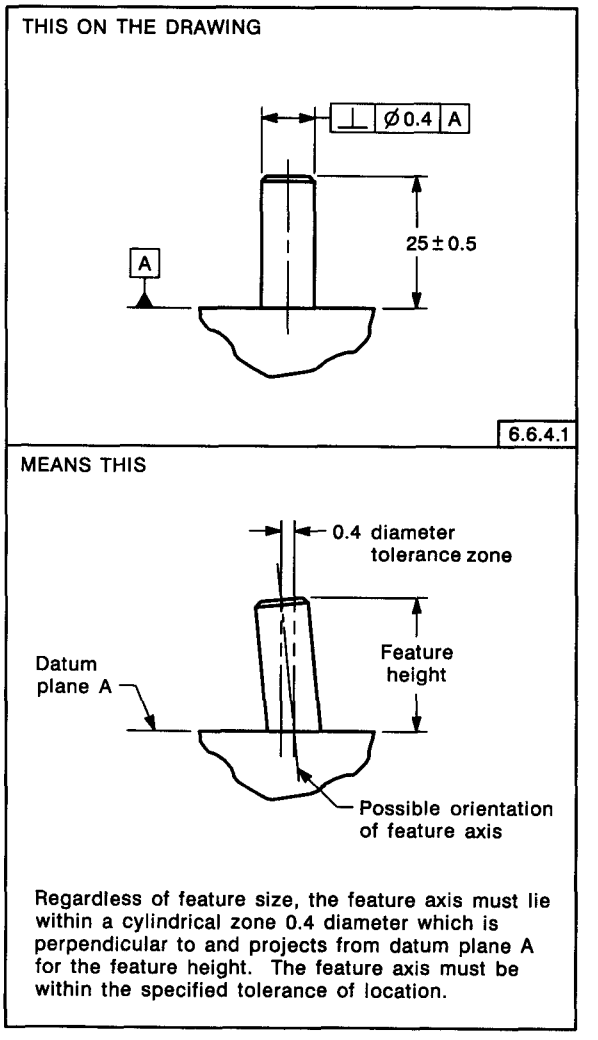

FIG. 6-39 SPECIFYING PERPENDICULARITY FOR AN AXIS (PIN OR BOSS RFS)

Copyright ASME International
Provided by IHS under license with ASME
No reproduction or networking permitted without license from IHS
Not for Resale

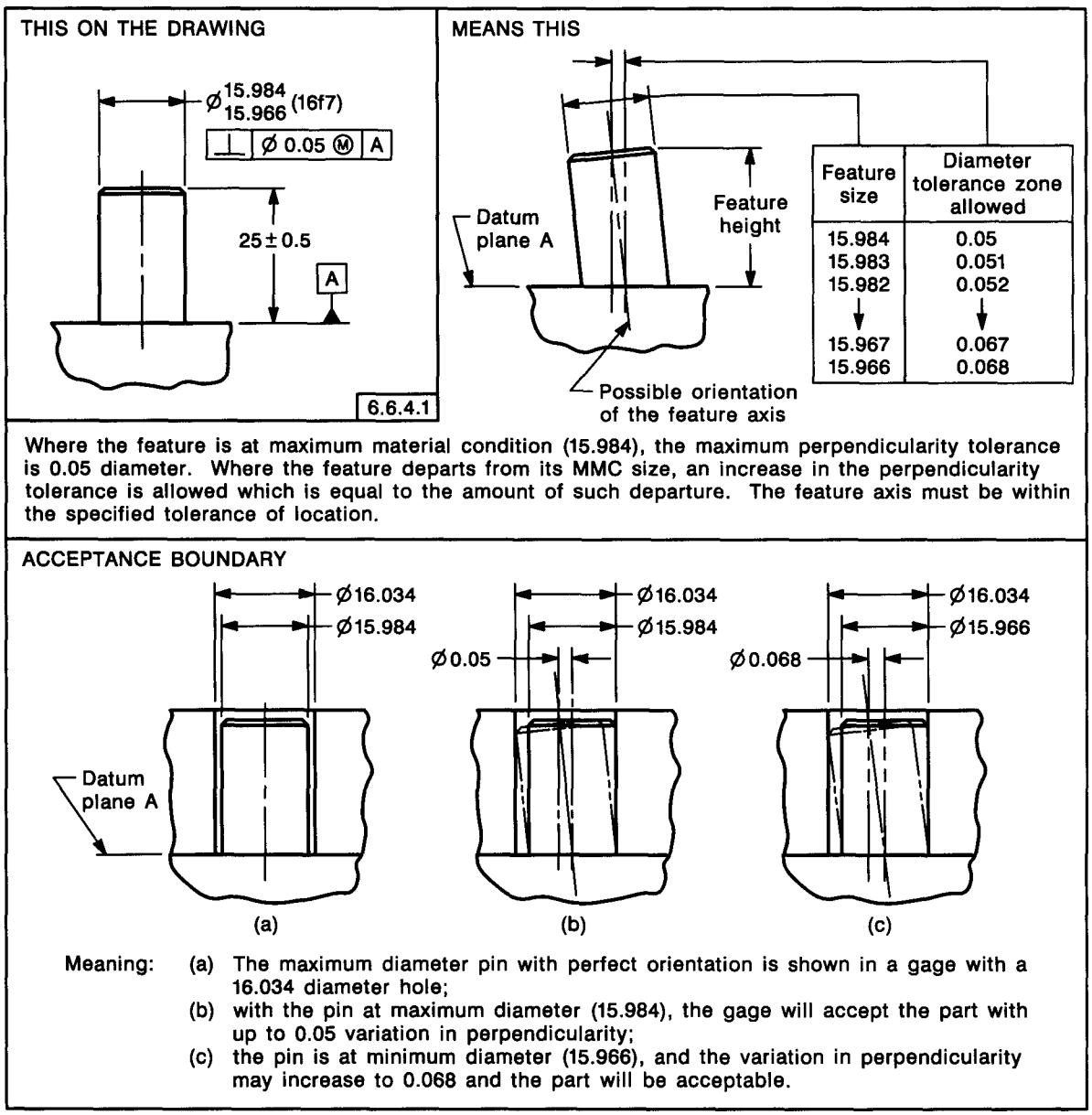

FIG. 6-40 SPECIFYING PERPENDICULARITY FOR AN AXIS SHOWING ACCEPTANCE BOUNDARY (PIN OR BOSS AT MMC)

Copyright ASME International
Provided by IHS under license with ASME
No reproduction or networking permitted without license from IHS
Not for Resale

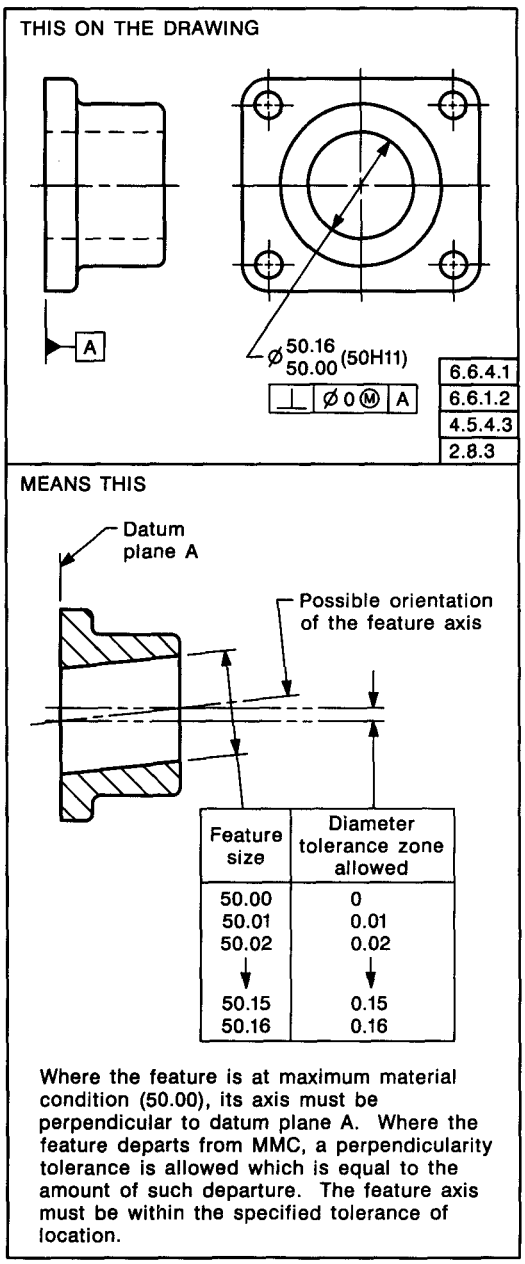

FIG. 6-41 SPECIFYING PERPENDICULARITY FOR AN AXIS (ZERO TOLERANCE AT MMC)

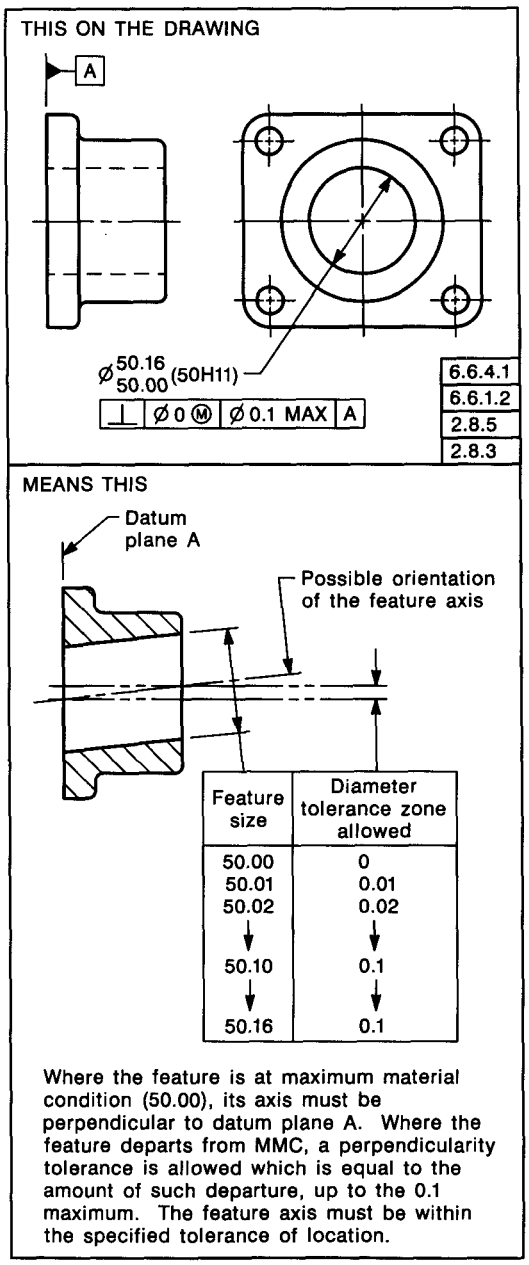

FIG. 6-42 SPECIFYING PERPENDICULARITY FOR AN AXIS (ZERO TOLERANCE AT MMC WITH A MAXIMUM SPECIFIED)

Copyright ASME International
Provided by IHS under license with ASME
No reproduction or networking permitted without license from IHS
Not for Resale

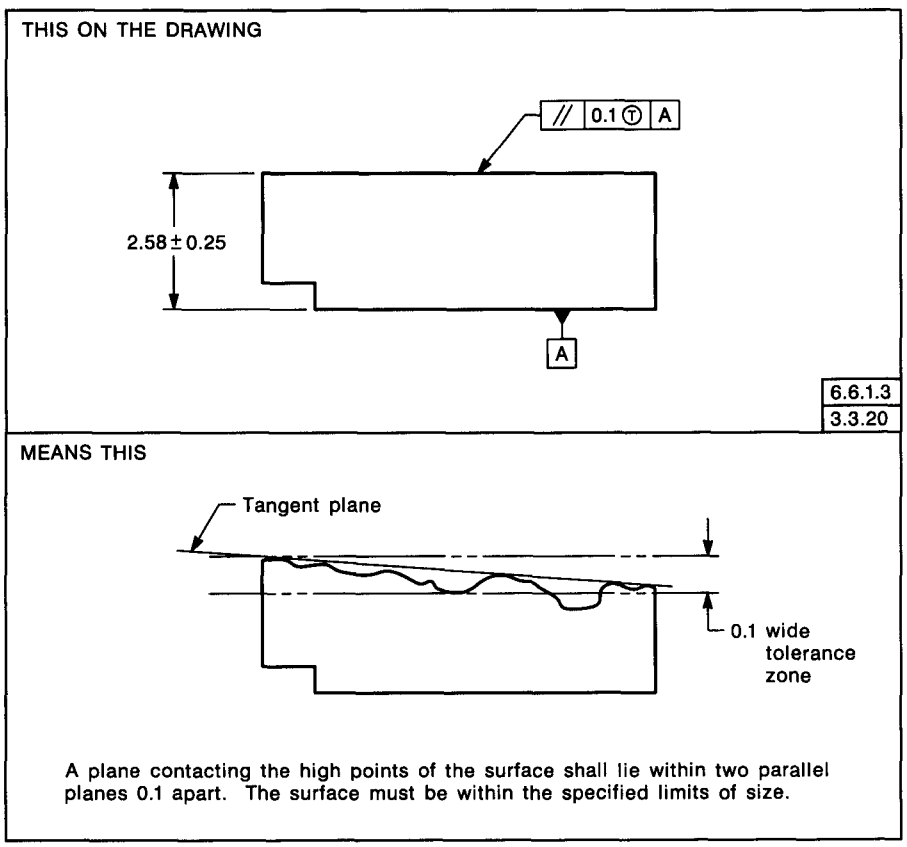

FIG. 6-43 SPECIFYING A TANGENT PLANE

Copyright ASME International
Provided by IHS under license with ASME
No reproduction or networking permitted without license from IHS
Not for Resale

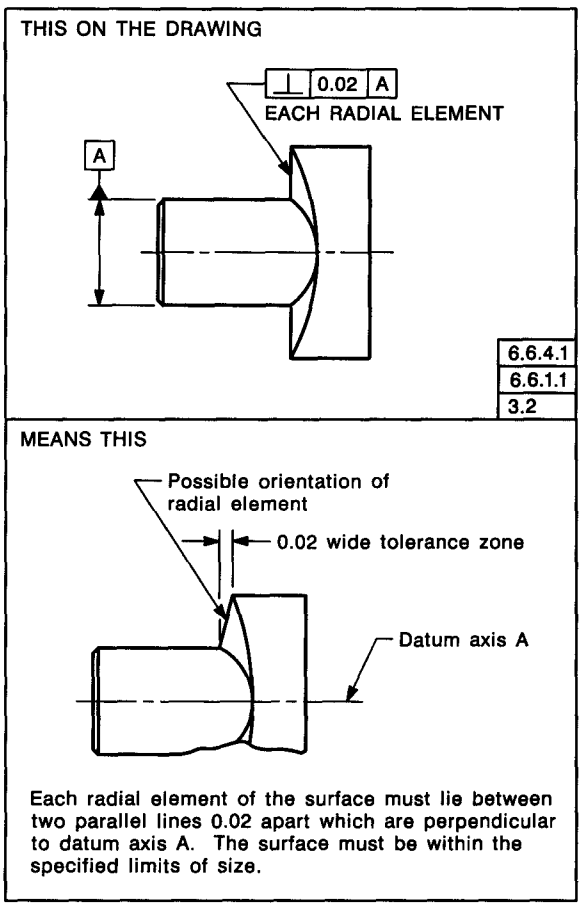

FIG. 6-44 SPECIFYING PERPENDICULARITY FOR A RADIAL ELEMENT OF A SURFACE

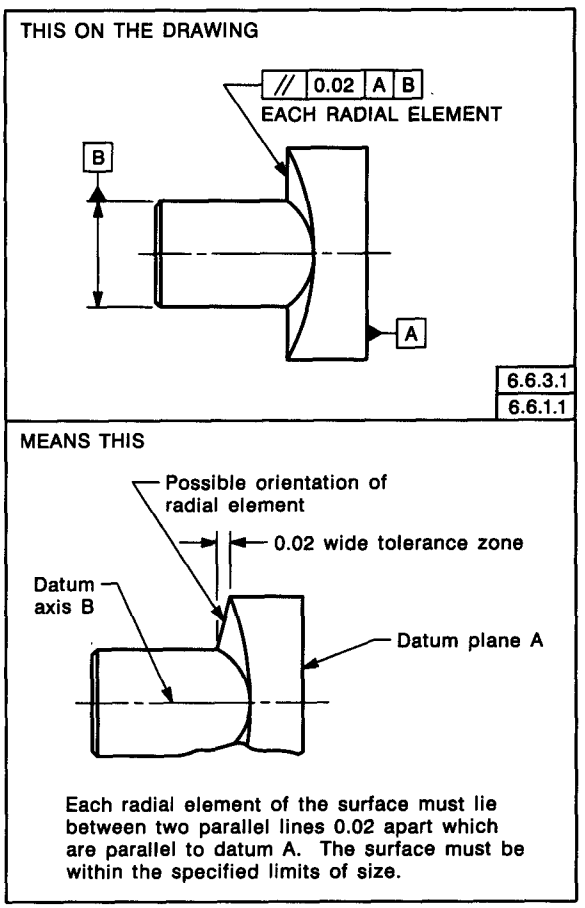

FIG. 6-45 SPECIFYING PARALLELISM FOR A RADIAL ELEMENT OF A SURFACE

Copyright ASME International
Provided by IHS under license with ASME
No reproduction or networking permitted without license from IHS
Not for Resale

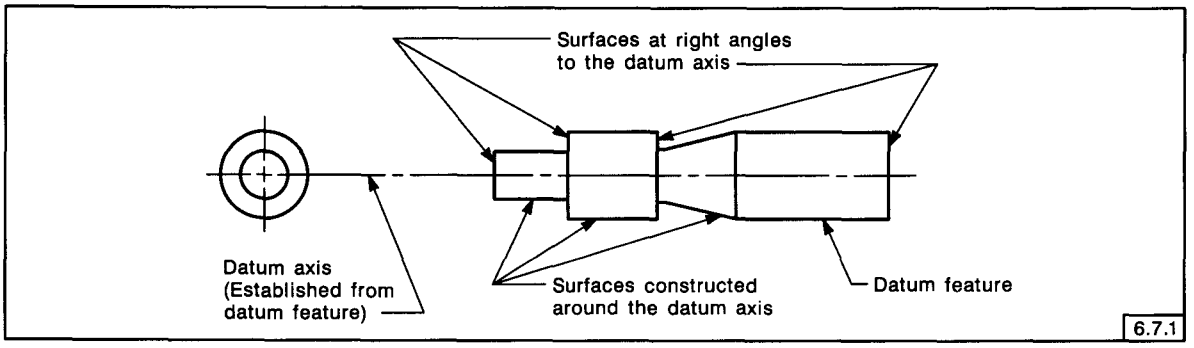

FIG. 6-46 FEATURES APPLICABLE TO RUNOUT TOLERANCING

6.7 RUNOUT

Runout is a composite tolerance used to control the functional relationship of one or more features of a part to a datum axis.

6.7.1 Runout Tolerance. The types of features controlled by runout tolerances include those surfaces constructed around a datum axis and those constructed at right angles to a datum axis. See Fig. 6-46.

6.7.1.1 Basis of Control. The datum axis is established by a diameter of sufficient length, two diameters having sufficient axial separation, or a diameter and a face at right angles to it. Features used as datums for establishing axes should be functional, such as mounting features that establish an axis of rotation.

6.7.1.1.1 Rotation About an Axis. Each considered feature must be within its runout tolerance when the part is rotated about the datum axis. This may also include the datum features as a part of the runout tolerance control where so designated. The tolerance specified for a controlled surface is the total tolerance or full indicator movement (FIM).

6.7.1.2 Types of Runout Control. There are two types of runout control, circular runout and total runout. The type used is dependent upon design requirements and manufacturing considerations. Circular runout is normally a less complex requirement than total runout. The following paragraphs describe both types of runout.

6.7.1.2.1 Control of Circular Elements. Circular runout provides control of circular elements of a surface. The tolerance is applied independently at each circular measuring position as the part is rotated 360°. See Fig. 6-47. Where applied to surfaces constructed around a datum axis, circular runout may be used to control the cumulative variations of circularity and coaxiality. Where applied to surfaces constructed at right angles to the datum axis, circular runout controls circular elements of a plane surface (wobble).

6.7.1.2.2 Total Runout for Composite Control of Surfaces. Total runout provides composite control of all surface elements. The tolerance is applied simultaneously to all circular and profile measuring positions as the part is rotated 360°. See Fig. 6-48. Where applied to surface, constructed around a datum axis, total runout is used to control cumulative variations of circularity, straightness, coaxiality, angularity, taper, and profile of a surface. Where applied to surfaces at right angles to a datum axis, total runout controls cumulative variations of perpendicularity (to detect wobble) and flatness (to detect concavity or convexity).

6.7.1.2.3 Applied to Portion of Surface. Where a runout tolerance applies to a specific portion of a surface, a thick chain line is drawn adjacent to the surface profile on one side of the datum axis for the desired length. Basic dimensions are used to define the extent of the portion so indicated. See Fig. 6-47.

6.7.1.3 Application. The following methods are used to specify a runout tolerance.

6.7.1.3.1 Control of Diameters to Datum Axis. Where features to be controlled are diameters related to a datum axis, one or two of the diameters are specified as datums to establish the datum axis, and each related surface is assigned a runout tolerance with respect to this datum axis. Figures 6-47 and 6-48 illustrate the fundamental principle of relating features in a runout tolerance to a datum axis as established from a single datum diameter (cylinder)

Copyright ASME International
Provided by IHS under license with ASME
No reproduction or networking permitted without license from IHS
Not for Resale

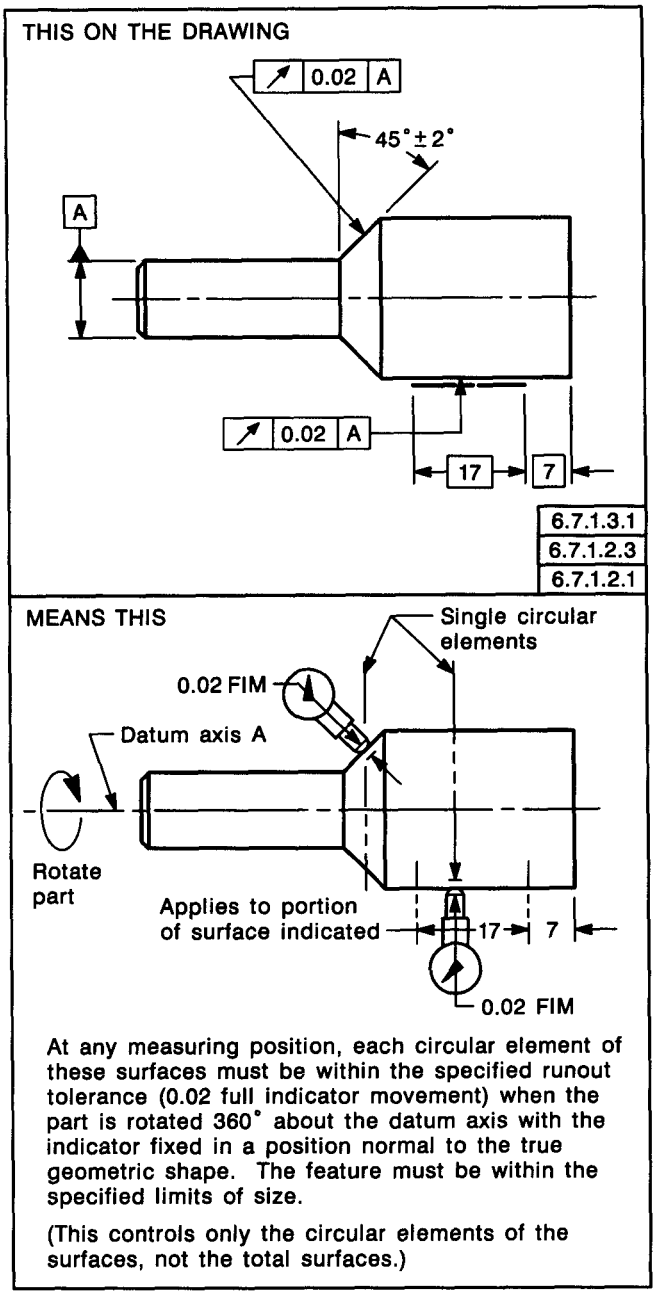

FIG. 6-47 SPECIFYING CIRCULAR RUNOUT RELATIVE TO A DATUM DIAMETER

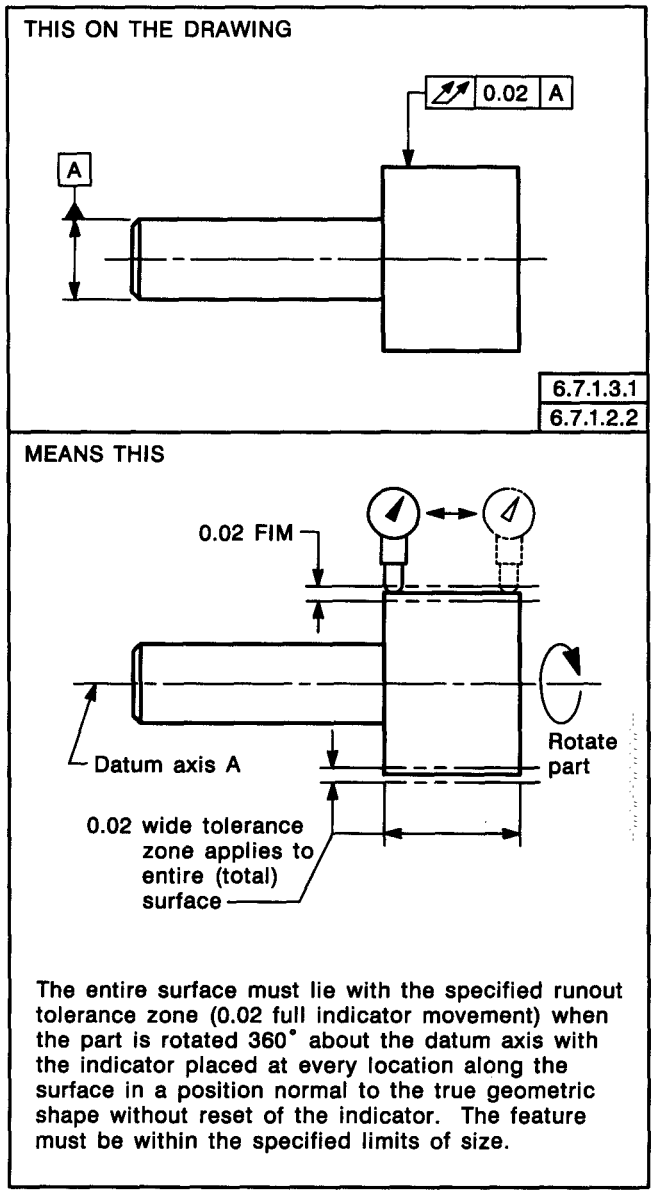

FIG. 6-48 SPECIFYING TOTAL RUNOUT RELATIVE TO A DATUM DIAMETER

Copyright ASME International
Provided by IHS under license with ASME
No reproduction or networking permitted without license from IHS
Not for Resale

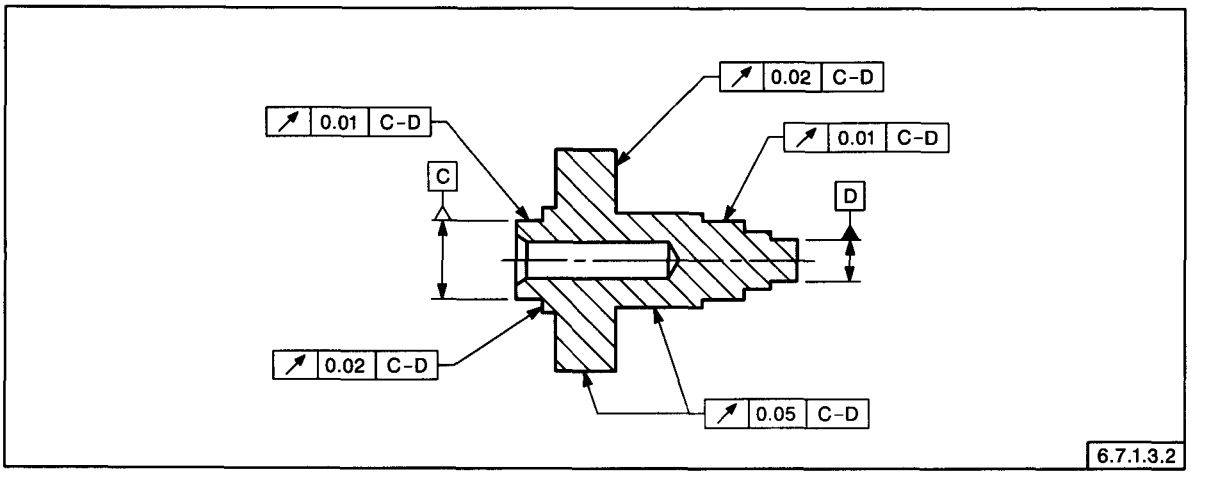

FIG. 6-49 SPECIFYING RUNOUT RELATIVE TO TWO DATUM DIAMETERS

of sufficient length. Figure 6-47 incorporates the principle of circular runout tolerancing and illustrates the control of circular elements of a surface. Figure 6-48 incorporates the principle of total runout tolerancing and illustrates the control of an entire surface.

6.7.1.3.2 Two Datum Diameters. Figure 6-49 illustrates application of runout tolerances where two datum diameters collectively establish a single datum axis to which the features are related.

6.7.1.3.3 Diameter and Face Datums. Where features to be controlled are related to a diameter and a face at right angles to it, each related surface is assigned a runout tolerance with respect to these two datums. The datums are specified separately to indicate datum precedence. See Fig. 6-50. This figure incorporates the principles of both methods of specifying runout tolerances.

6.7.1.3.4 Control of Individual Datum Surfaces. It may be necessary to control individual datum surface variations with respect to flatness, circularity, parallelism, straightness, or cylindricity. Where such control is required, the appropriate tolerance is specified. See Figs. 6-51 and 6-52 for examples applying cylindricity and flatness to the datums.

6.7.1.3.5 Control of Runout to a Datum Feature(s). Where datum features are required by function to be included in the runout control, runout tolerances must be specified for these features. See Figs. 6-51 and 6-52.

6.7.1.3.6 Relationship of Features Based on Datum Sequence. Features having a specific relationship to each other rather than to a common datum axis are indicated by appropriate datum references within the feature control frame. See Fig. 6-51. In this example, the runout tolerance of the hole is related to datum E rather than the axis C-D.

6.7.1.4 Surface Relationship. Where two surfaces are related to a common datum by runout tolerances, the permissible runout between the two surfaces is equal to the sum of their individual runout tolerances with respect to the datum.

6.7.1.5 Specification. Multiple leaders may be used to direct a feature control frame to two or more surfaces having a common runout tolerance. Surfaces may be specified individually or in groups without affecting the runout tolerance. See Fig. 6-51.

6.8 FREE STATE VARIATION

Free state variation is a term used to describe distortion of a part after removal of forces applied during manufacture. This distortion is principally due to weight and flexibility of the part and the release of internal stresses resulting from fabrication. A part of this kind, for example, a part with a very thin wall in proportion to its diameter, is referred to as a nonrigid part. In some cases, it may be required that the part meet its tolerance requirements while in the free state. See Fig. 6-53. In others, it may be necessary to simulate the mating part interface in order to verify individual or related feature tolerances. This is done by restraining the appropriate features, such as the datum features in Fig. 6-54. The restraining

Copyright ASME International
Provided by IHS under license with ASME
No reproduction or networking permitted without license from IHS
Not for Resale

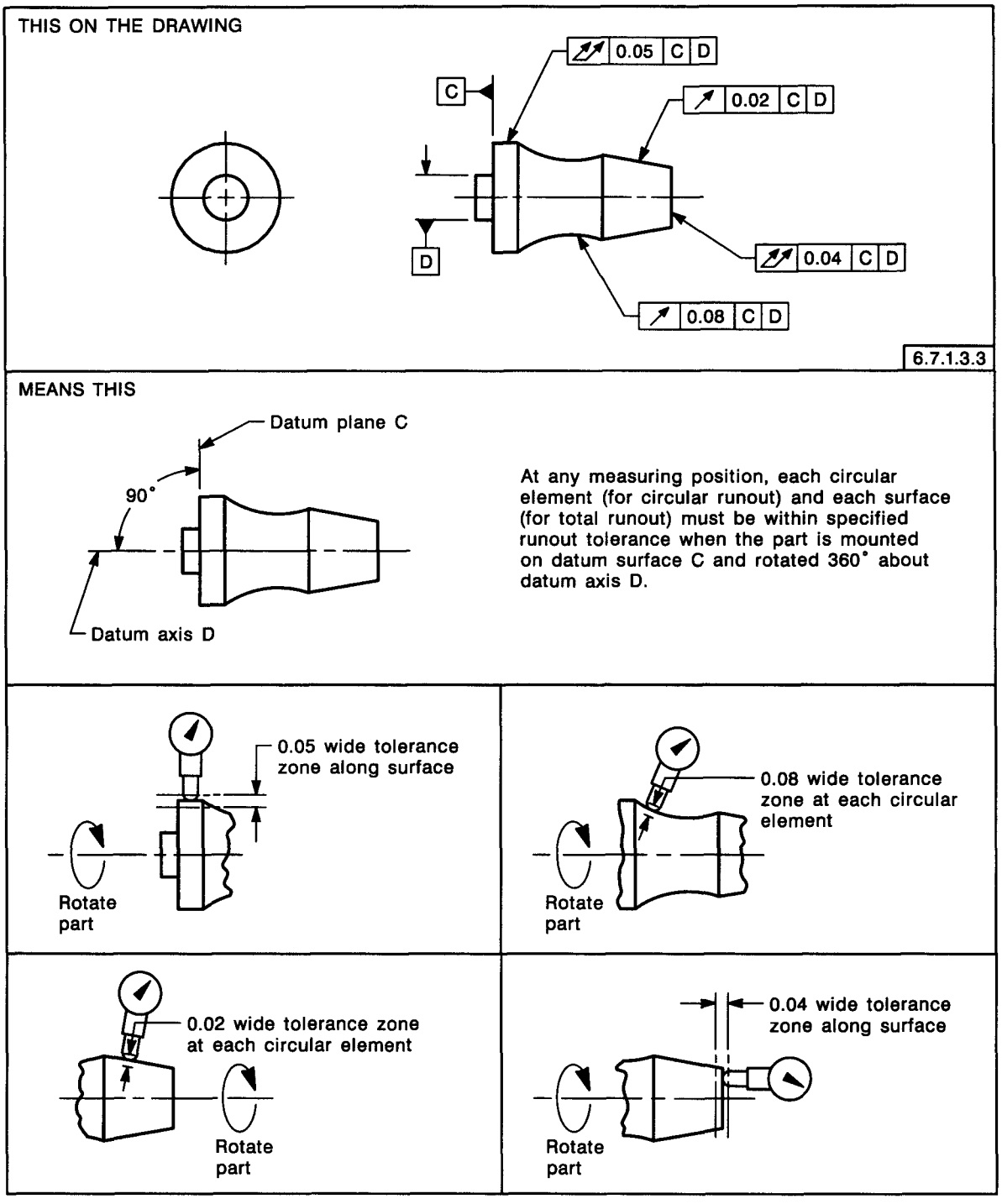

FIG. 6-50 SPECIFYING RUNOUT RELATIVE TO A DATUM SURFACE AND A DIAMETER

Copyright ASME International
Provided by IHS under license with ASME
No reproduction or networking permitted without license from IHS
Not for Resale

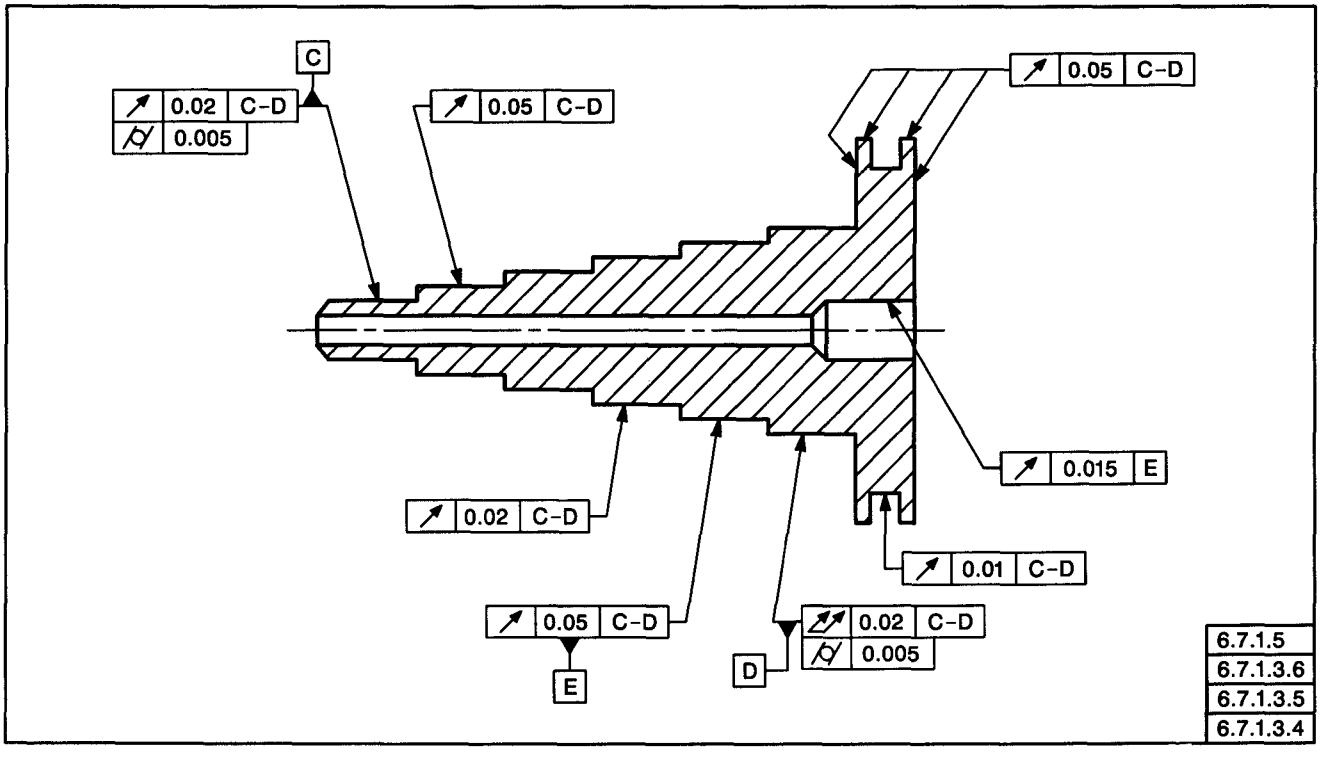

FIG. 6-51 SPECIFYING RUNOUT RELATIVE TO TWO DATUM DIAMETERS WITH FORM CONTROL SPECIFIED

Copyright ASME International
Provided by IHS under license with ASME
No reproduction or networking permitted without license from IHS
Not for Resale

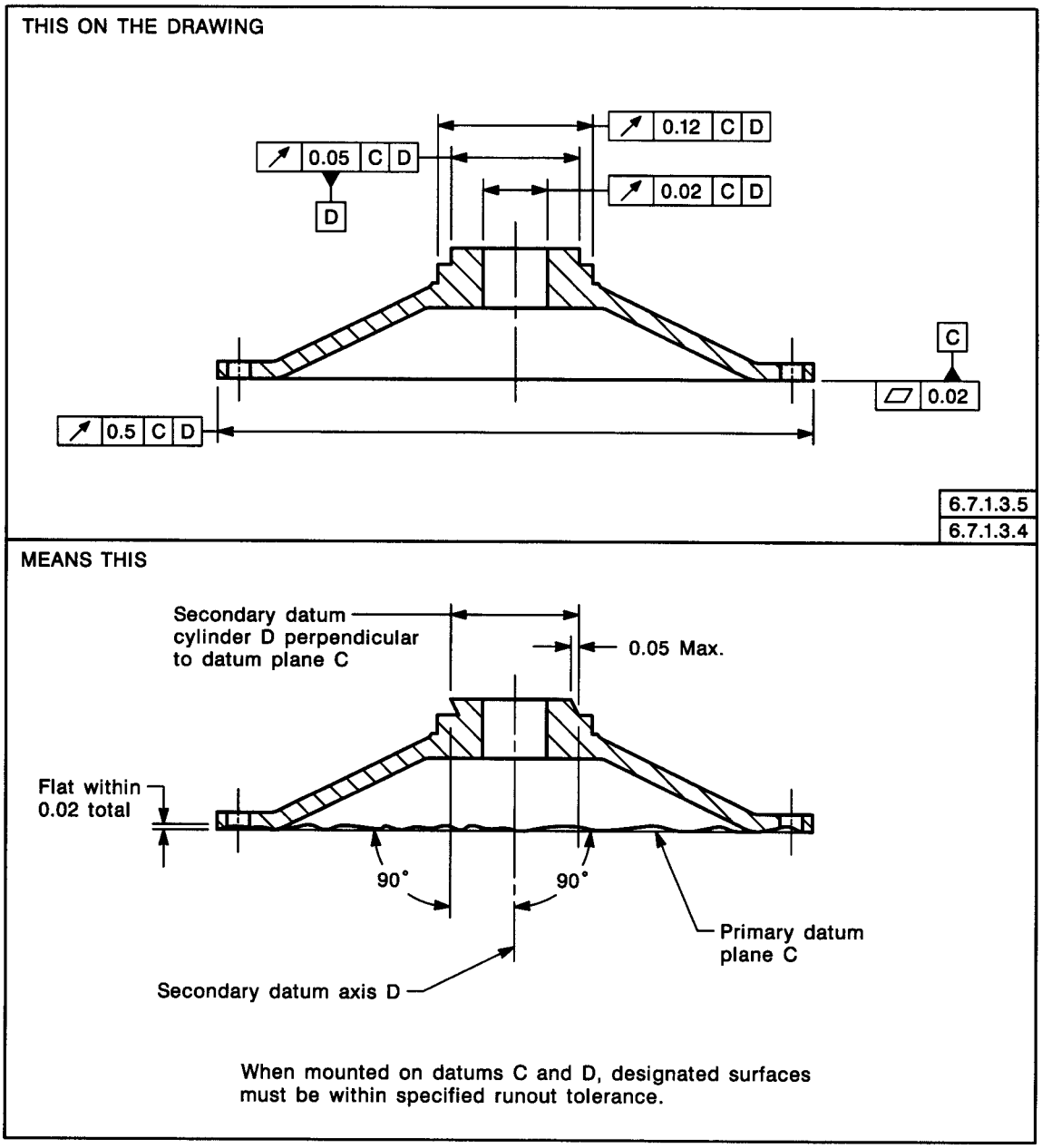

FIG. 6-52 SPECIFYING RUNOUT RELATIVE TO A DATUM SURFACE AND DIAMETER WITH FORM CONTROL SPECIFIED

Copyright ASME International
Provided by IHS under license with ASME
No reproduction or networking permitted without license from IHS
Not for Resale

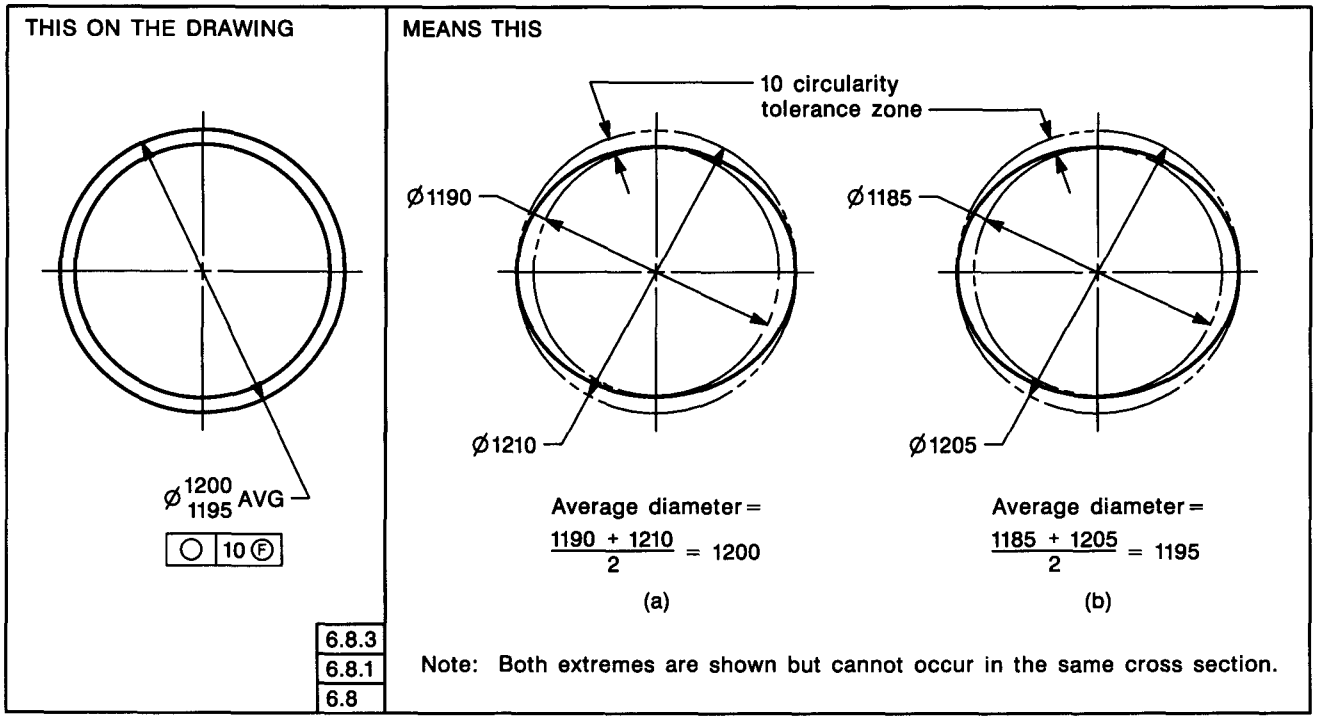

FIG. 6-53 SPECIFYING CIRCULARITY IN A FREE STATE WITH AVERAGE DIAMETER

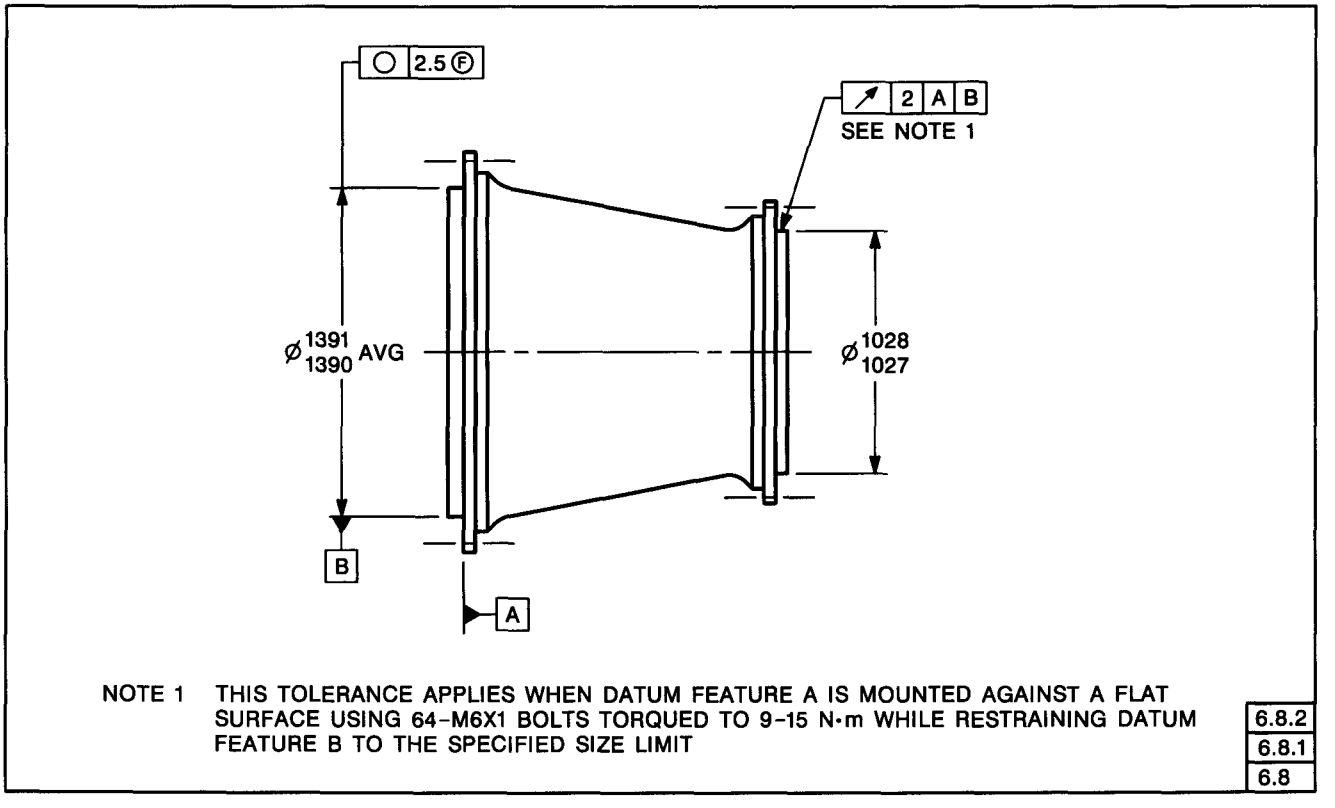

FIG. 6-54 SPECIFYING RESTRAINT FOR NONRIGID PARTS

Copyright ASME International
Provided by IHS under license with ASME
No reproduction or networking permitted without license from IHS
Not for Resale

forces are those that would be exerted in the assembly or functioning of the part. However, if the dimensions and tolerances are met in the free state, it is usually not necessary to restrain the part unless the effect of subsequent restraining forces on the concerned features could cause other features of the part to exceed specified limits. Free state variation of nonrigid parts may be controlled as described in the following paragraphs.

6.8.1 Specifying Geometric Tolerances on Features Subject to Free State Variation. Where an individual form or location tolerance is applied to a feature in the free state, specify the maximum allowable free state variation with an appropriate feature control frame. See Fig. 6-53. The free state symbol may be placed within the feature control frame, following the tolerance and any modifiers, to clarify a free state requirement on a drawing containing restrained feature notes, or to separate a free state requirement from associated features having restrained requirements. See Figs. 3-18 and 6-54.

6.8.2 Specifying Geometric Tolerances on Features to Be Restrained. Where orientation, runout, or location tolerances are to be verified with the part in a restrained condition, select and identify the features (pilot diameter, bosses, flanges, etc.) to be used as datum surfaces. Since these surfaces may be subject to free state variation, it is necessary to specify the maximum force necessary to restrain each of them. Determine the amount of the restraining or holding forces and other requirements necessary to simulate expected assembly conditions. Specify on the drawing that if restrained to this condition, the remainder of the part or certain features thereof shall be within stated tolerances. See Fig. 6-54.

6.8.3 Average Diameter. Where form control, such as circularity, is specified in a free state for a circular or cylindrical feature, the pertinent diameter is qualified with the abbreviation AVG. See Fig. 6-53. Specifying circularity on the basis of an average diameter on a nonrigid part is necessary to ensure that the actual diameter of the feature can be restrained to the desired shape at assembly. An average diameter is the average of several diametral measurements across a circular or cylindrical feature. Normally, enough (at least four) measurements are taken to assure the establishment of an average diameter. If practicable, an average diameter may be determined by a peripheral tape measurement. Note that the free state circularity tolerance is greater than the size tolerance on the diameter. Figures 6-53(a) and (b), simplified by showing only two measurements, give the permissible diameters in the free state for two extreme conditions of maximum average diameter and minimum average diameter, respectively. The same method applies when the average diameter is anywhere between maximum and minimum limits.

Copyright ASME International
Provided by IHS under license with ASME
No reproduction or networking permitted without license from IHS
Not for Resale

APPENDIX A
PRINCIPAL CHANGES AND IMPROVEMENTS

(This Appendix is not a part of ASME Y14.5M-1994.)

A1 GENERAL

The purpose of this Appendix is to provide users a list of the principal changes and improvements in this revision of the Standard as compared to the previous issue. The changes are summarized for each section or appendix in the form of additions, clarifications, extensions of principles, or resolution of differences.

A2 FIGURES

- Figures have been revised to add a paragraph number(s) in the lower right corner. This notation is provided to assist users in locating the principal paragraph(s) that refers to the illustration.
- All figures have been revised, where applicable, to show the universal International Organization for Standardization (ISO) datum feature symbol being introduced in this issue of the Standard.
- All figures have been revised, where applicable, to remove the RFS symbol, which is no longer necessary.

A3 SECTION 1, SCOPE, DEFINITIONS, AND GENERAL DIMENSIONING

- Added clarification that the definitions, fundamental rules, and practices for general dimensioning that are established in Section 1 apply to coordinate as well as geometric dimensioning methods.
- Revised the designation from ANSI to ASME to reflect The American Society of Mechanical Engineers as the preparing organization. References to the Standard shall now state ASME Y14.5M-1994.
- Added the following references and sources:
  ANSI/ASME B1.2-1983, Gages and Gaging for Unified Inch Screw Threads
  ANSI B4.4M-1981, Inspection of Workpieces
  ANSI B5.10-1981, Machine Tapers — Self Holding and Steep Taper Series
  ANSI B92.1-1970, Involute Splines and Inspection, Inch Version
  ANSI B92.2M-1980, Metric Module, Involute Splines
  ASME Y1.1-1989, Abbreviations — For Use on Drawings and in Text
  ASME Y14.3M-1994, Multiview and Sectional View Drawings
  ASME Y14.5.1M-1994, Mathematical Definition of Dimensioning and Tolerancing Principles
  ANSI Y14.6aM-1981, Screw Thread Representation (Metric Supplement)
  ANSI Y14.7.1-1971, Gear Drawing Standards — Part 1: For Spur, Helical, Double Helical, and Rack
  ANSI Y14.7.2-1978, Gear and Spline Drawing Standards — Part 2: Bevel and Hypoid Gears
  ASME Y14.8M-1989, Castings and Forgings
  ANSI/IEEE 268-1992, Metric Practice
- Definitions and terms have been enhanced by expansion, addition, clarification, and reorganization.
- New or revised terms and definitions:
  boundary, inner
  boundary, outer
  datum feature simulator
  datum, simulated
  dimension
  envelope, actual mating
  feature
  feature, axis of
  feature, center plane of
  feature, derived median plane of
  feature, derived median line of

Copyright ASME International
Provided by IHS under license with ASME
No reproduction or networking permitted without license from IHS
Not for Resale

feature of size
plane, tangent
resultant condition
true geometric counterpart
virtual condition

- The term *size* has been expanded to give more explicit meaning and application to the following:
  size, actual
  size, actual local
  size, actual mating
  size, nominal
  size, resultant condition
  size, virtual condition
- Fundamental rules added:
  Unless otherwise specified, all dimensions and tolerances apply in a free state condition except as specified under certain conditions as described in Section 6.
  Unless otherwise specified, all geometric tolerances apply for full depth, length, and width of the feature.
  Dimensions and tolerances apply only at the drawing level where they are specified. A dimension specified for a given feature on one level of drawing (for example, a detail drawing) is not mandatory for that feature at any other level (for example, an assembly drawing).
- Paragraph and subparagraph numbering is revised to accommodate new and rearranged text. Subparagraph headings are added to identify subject matter more clearly. Some subparagraphs are condensed into preceding paragraphs for clarity and flow of subject matter.
- Explanation and use of leader lines is expanded and clarified.
- Dimensions "not to scale" coverage is expanded to accommodate differing methods of drawing preparation from manual to computer graphics systems for product definition.
- Explanation of round holes and application of a depth dimension is expanded and clarified in text and illustrations.
- Explanation of counterbored holes is expanded and clarified in text and illustrations.
- For methods of specifying requirements peculiar to castings and forgings, a reference to ASME Y14.8M is added.
- To replace words on the drawing, symbology, as described in Section 3 and Appendix C, is included in the figures.
- New figures are added to expand coverage on "Counterbored Holes" and "Countersunk and Counterdrilled Holes."
- Expansion of figures for "Countersink on a Curved Surface" is provided.

A4 SECTION 2, GENERAL TOLERANCING AND RELATED PRINCIPLES

- Notation is made that if CAD/CAM database models are used and they do not include tolerances, then tolerances must be expressed outside of the database to reflect design requirements.
- Notation is made that tolerances on dimensions that locate features of size are preferably specified by the positional tolerancing method described in Section 5. However, in certain cases, such as locating irregular-shaped features individually or in patterns, the profile tolerancing method as described in Section 6 may be used.
- Clarified and expanded the meaning of implied 90° center lines and surfaces of a part as depicted on engineering drawings versus the meaning of implied 90° basic dimensions when geometric controls are specified.
- The number of decimal places to be used in a dimension and associated tolerances for unilateral, bilateral, basic, or limit dimensioning is presented for both metric or inch applications.
- The number of decimal places to be used with angle dimensions is presented.
- Changes under "limits of size" Rule #1:
  Variations in size, referred to as "the actual size of an individual feature" are now referred to as "the actual local size of an individual feature" at each cross section.
  In numerous places where the term *size* was used in the previous Standard, the terms *actual local size*, *actual mating size*, and *actual mating envelope* are substituted as appropriate for design intent and the expansion in distinguishing between the different uses of the term *size*.
- Regarding applicability of RFS and MMC in controlling straightness of an axis or center plane, the tolerance zone must contain the "derived median line" or the "derived median plane" rather than

Copyright ASME International
Provided by IHS under license with ASME
No reproduction or networking permitted without license from IHS
Not for Resale

the "derived axis", "center line", or "derived center plane" of the previous Standard.

- Changes under Rules #2 and #3:

  Former Rules #2 and #3 regarding applicability of RFS, MMC, or LMC are replaced by a new Rule #2 that states that for all applicable geometric tolerances, "regardless of feature size" (RFS) applies with respect to the individual tolerance, datum reference, or both, where no modifying symbol is specified.

  Maximum material condition (MMC) or least material condition (LMC) must be specified on the drawing where it is required.

- Since the "regardless of feature size" condition is implied on all applicable geometric tolerancing for features of size, the RFS symbol is no longer necessary. This harmonizes U.S. practices with universal international (ISO) practices.

  As an alternative interim practice (Rule 2a), RFS may be specified on the drawing as in the previous Standard.

- The "symmetry" characteristic is reactivated and may be applied only on an RFS basis. Likewise, circular runout, total runout, and concentricity are reaffirmed as applicable only at RFS and cannot be modified to MMC or LMC.

- Application and explanation of zero tolerance at least material condition (LMC) are added.

- *Virtual condition* explanation is expanded and described as a constant value and as it relates to *resultant condition* as a worst case value. *Inner boundary* and *outer boundary* terms are also introduced as an associated method of identifying extreme limits of the concerned feature tolerances.

- *Resultant condition* is introduced and explained as a worst case inner locus or outer locus condition.

- Added figures to explain *virtual condition boundary* and *resultant condition boundary* as derived from the material condition specified at MMC or LMC.

- "Datum features at virtual condition" explanation is expanded to include the use of zero tolerance at MMC or LMC where a virtual condition equal to the maximum material condition is desired.

- The "dimension origin" symbol and method are expanded for use with angular features.

- The definition of *radius* is added.

- A new "controlled radius" symbol replaces the symbol formerly used to specify a tangent radius without flats and reversals. The existing "radius" symbol is retained, but its meaning now permits flats and reversals in the surface contour.

- A standard method is added for identifying tolerances that apply using a statistical basis. The "statistical tolerance" symbol is introduced.

A5 SECTION 3, SYMBOLOGY

- The universal (ISO) datum feature symbol is adopted and replaces the previous one. Construction and application of the datum feature symbol and its use when establishing datums are added. The datum feature symbol is applied to the concerned feature surface outline, extension line, dimension line, feature control frame, dimension leader line, etc., in keeping with the principles established and the options provided.

- Explanation is added for placement of a datum target area size outside the datum target symbol when there is insufficient space within the symbol's upper compartment.

- Use of the material condition symbol for RFS is no longer necessary. The "regardless of feature size" condition applies where the symbols for MMC or LMC are not stated on size features.

- New symbols introduced and explained:
  controlled radius
  statistical tolerance
  between
  free state
  tangent plane

- The "symmetry" characteristic and symbol are reactivated from earlier standards.

- The "all around" symbol explanation is added to the text.

- The "projected tolerance zone" symbol is now placed in the feature control frame, following the stated tolerance and any modifier. The dimension indicating the minimum height of the tolerance zone is also placed in the feature control frame, following the "projected tolerance zone" symbol.

A6 SECTION 4, DATUM REFERENCING

- The introductory paragraphs have been reorganized and rewritten to expand and clarify the prin-

Copyright ASME International
Provided by IHS under license with ASME
No reproduction or networking permitted without license from IHS
Not for Resale

ciples of identifying features of a part as datum features.

- All illustrations have been revised to show the universal ISO datum feature symbol and remove the RFS material condition symbol.
- Immobilization of the part relative to three mutually perpendicular planes in the datum reference frame is discussed and application relative to the "true geometric counterpart" is expanded.
- A *true geometric counterpart* of a feature is further explained and examples are provided.
- Subparagraph titles have been added for clarity and organization of subject matter.
- A mathematically defined surface, such as a compound curve or contoured surface, can be used as a datum feature relative to a datum reference frame.
- The use of "parts with inclined datum features" is introduced and explained in establishing a datum reference frame.
- More explicit terms are provided to describe and explain the datum of a cylindrical feature. The datum of a cylindrical surface is the axis of the *true geometric counterpart* of the datum feature (for example, the *actual mating size* or the *virtual condition boundary*).
- Paragraphs describing and explaining datum features "not subject to size variations" and datum features "subject to size variation" are reorganized, explained, and clarified.
- The role of the "simulated datum" is clarified. The term *actual mating envelope* is inserted where appropriate.
- Text on primary, secondary, and tertiary datums for diameter or width features, and under RFS, MMC, or LMC conditions, is expanded and explained using the terms *simulated datum*, *actual mating envelope*, *true geometric counterpart*, *virtual condition*, and *least material condition*.
- Expansion of an explanation for the establishment of a single datum plane from two or more coplanar features is included.
- An explanation of the use of a pattern of features as a single datum reference is expanded and illustrated.
- The "simultaneous requirements" principle, where two or more features, or patterns of features, are related to common datums in the same order of precedence, is expanded and illustrated. Clarified that this principle does not apply to the lower segments of composite feature control frames unless specific notation is added.
- Where datum targets or equalizing datums are used on more complex parts and the datum feature symbol cannot be conveniently tied to a specific feature, the datum feature symbol is not required. The datum reference frame will be established by the collective points, lines, areas, or portions of the surfaces involved.
- On equalizing datums, it is permissible to use the datum feature symbol to identify the equalized theoretical center planes of the datum reference frame established. This is an exception and should be done only when necessary and in conjunction with datum targets.
- For irregular or step datum surfaces, the datum plane should contain at least one of the datum targets.
- In expansion of the datum nomenclature, all appropriate figures were expanded or revised to include explanation of the relationships between the datum feature; simulated datum feature; simulated datum plane, axis, or center plane; datum feature simulator; true geometric counterpart; and datum plane, axis, or center plane.
- Numerous figures were expanded to provide more information.
- New figures were added for "Inclined Datum Features", "Orientation of Two Datum Planes Through a Hole", "Secondary and Tertiary Datum Features at LMC", "Hole Pattern Identified as Datum", "Simultaneous Position and Profile Tolerances", "Datum Targets Used to Establish Datum Reference Frame for Complex Part", and "Two Datum Features, Single Datum Axis."

A7 SECTION 5, TOLERANCES OF LOCATION

- Subparagraph headings are added to identify subject matter more clearly.
- The universal ISO datum feature symbol is inserted in all illustrations replacing the previous datum feature symbol.
- The terms *actual mating size* and *actual mating*

Copyright ASME International
Provided by IHS under license with ASME
No reproduction or networking permitted without license from IHS
Not for Resale

envelope are substituted for *actual size* wherever appropriate throughout the section.

- A note is added to acknowledge that the axis and surface explanations for positional tolerance at MMC do not always yield equivalent results. In such cases, the surface interpretation shall take precedence.
- The explanation of "multiple patterns of features located by basic dimensions relative to common datums" is expanded and explained.
- The differences in meaning between "common datum features not subject to size tolerances or size features specified on an RFS basis" and "patterns of features specified on an MMC basis" is explained.
- A number of new illustrations are added to expand the explanation of composite positional tolerancing.
- The composite positional tolerancing text is revised, expanded, and rewritten.
- The relationship of the *Pattern-Locating Tolerance Zone Framework (PLTZF)* and the *Feature-Relating Tolerance Zone Framework (FRTZF)* is expanded and explained in new text and numerous illustrations.
- The PLTZF is located by basic dimensions from specified datums and the datum reference frame. It specifies the larger positional tolerance for the location of the pattern of features as a group.
- The FRTZF governs the smaller positional tolerance for each feature within the pattern (feature-to-feature relationship). Basic dimensions that locate the PLTZF from datums are not applicable to the FRTZF.
- Where datum references are not specified in the lower segment of a composite feature control frame, the FRTZF is free to be located and oriented (shift and/or tilt) within the boundaries established and governed by the PLTZF.
- If datums are specified in the lower segment of the composite feature control frame, they govern the orientation only of the FRTZF to the specified datums and relative to the PLTZF.
- Where datum references are specified in the lower segment of the composite feature control frame, one or more of the datums specified in the upper segment of the composite frame are repeated, as applicable and in the same order of precedence as the PLTZF, to govern the orientation of the FRTZF.
- If different datum references, different datum modifiers, or the same datums in a different order of precedence are contemplated as upper and lower segments of a composite feature control frame, this constitutes a different datum reference frame and is not to be specified using the composite tolerance method. In such cases, separately specified single-segment feature control frames are used, each including applicable datums. Each single segment is an independent separate requirement.
- Explanation of the use of two single-segment feature control frames is expanded to denote (or specify) design requirements for independent basic-dimension-related verifications.
- "Radial hole pattern located by composite tolerancing" illustrations are shown using a more common application where the primary datum is a plane feature rather than a size feature.
- Text and illustrations are added where the composite tolerancing principle is extended to addition of a secondary datum in the lower segment of the feature control frame.
- Distinction is made between use of composite positional tolerancing with primary and secondary datums in the lower segment in an "orientation only" requirement versus use of two single-segment feature control frames to depict separate independent design requirements.
- The use of the "projected tolerance zone" symbol within the feature control frame, following the geometrical tolerance and any material condition symbol, is presented.
- To invoke the boundary positional tolerancing concept as a requirement on an elongated or irregular feature of size, the term BOUNDARY is placed beneath the feature control frame.
- Clarification and expansion of "Positional Tolerancing for Coaxial Holes of Same Size" and for different size, using composite positional tolerancing are provided.
- The definition of *concentricity* is revised and refined.
- A distinction is made between *runout* (RFS) as a control for elements of a surface of revolution; *positional tolerance*, either MMC or RFS, to de-

Copyright ASME International
Provided by IHS under license with ASME
No reproduction or networking permitted without license from IHS
Not for Resale

termine the axis of the actual mating envelope; and *concentricity*, requiring the establishment and verification of the feature's median points and median line. Illustrations were either revised or added to explain these principles.

- The "symmetry" characteristic and symbol are reactivated from previous standards.
- A distinction is made between *positional tolerance for symmetrical relationships*, either MMC or RFS, to determine the center plane of the actual mating envelope; and *symmetry*, requiring establishment and verification of the feature's median points. Illustrations were either revised or added to explain these principles.
- The "spherical diameter" symbol is introduced as used in the feature control frame to indicate a spherical diameter tolerance zone.

A8 SECTION 6, TOLERANCES OF FORM, PROFILE, ORIENTATION, AND RUNOUT

- Subparagraphs are given titles for clarity and organization of subject matter.
- The universal ISO datum feature symbol is inserted to replace all former datum feature symbols in illustrations.
- The option is added, where appropriate, to use profile tolerancing for location of features.
- Coverage is added to emphasize the necessity to identify datum features on a part from which dimensions controlling orientation, runout, and where necessary, profile are related.
- The term *derived median line* replaces *axis* in the definition of a straightness tolerance.
- A straightness tolerance on a feature of size, normally permitting a violation of the MMC boundary, is not allowed when used in conjunction with an orientation or position tolerance. In such a case, the specified straightness tolerance value shall not be greater than the specified orientation or position tolerance values.
- The term *actual local size* is inserted where appropriate.
- Where function requires straight line elements to be related to a datum feature, profile of a line, related to datums, should be specified.
- The requirements imposed by circularity tolerancing are relaxed and applicability broadened.
- Explanation and illustration are added for combining profile tolerancing with positional tolerancing to control the boundary of a noncylindrical feature. To invoke this control, the term BOUNDARY is placed beneath the positional tolerance feature control frame.
- Composite profile tolerance explanation, application, methodology, and illustrations are added.
- The "tangent plane" concept and symbol are introduced, explained, and illustrated.
- Angularity tolerance using a cylindrical tolerance zone is added.
- Angularity tolerance using a tolerance zone defined by two parallel lines is added.
- Parallelism tolerance zone coverage is expanded to include a center plane relative to the datum plane.
- On specifying straightness at RFS or MMC, the term *derived median line of the feature actual local sizes* replaces *derived axis* or *center line of the actual feature.*
- An example is added for profile bilateral tolerance with unequal distribution.
- The "between" symbol is illustrated.
- An example is added for "profile of a surface for coplanar surfaces to a datum established by two surfaces."
- "Composite profile tolerancing of an irregular surface" and "composite profile of a surface" examples are added.
- The "free state" symbol is introduced and explained. It is to be used instead of the previous equivalent note.

A9 APPENDIX A, PRINCIPAL CHANGES AND IMPROVEMENTS

- A new Appendix A is added to provide a list of changes, additions, extensions of principles, and resolutions of differences found in this revision compared to the previous issue, ANSI Y14.5M-1982.
- In the 1982 issue, Appendix A was titled "Dimensioning for Computer-Aided Design and Com-

Copyright ASME International
Provided by IHS under license with ASME
No reproduction or networking permitted without license from IHS
Not for Resale

puter-Aided Manufacturing Mode." It provided guidelines applicable to the newly evolving CAD/CAM mode of preparing engineering drawings. Now, with interactive computer graphics systems more fully matured, national and international acceptance has been achieved. Correspondingly, this has resulted in recognition that the ASME Y14 series standards are the appropriate source for providing the definition of products, regardless of whether a computer or noncomputer (manual) method is used. Thus, special CAD/CAM explanation is reduced to very basic coverage within the body of the Standard.

A10 APPENDIX B, FORMULAS FOR POSITIONAL TOLERANCING

- Additional formula symbols are added:
  D = minimum depth of thread or minimum thickness of part with restrained or fixed fastener
  P = maximum thickness of part with clearance hole, or maximum projection of fastener, such as a stud
- In the fixed fastener case, clarification is made that "the same positional tolerance in each of the parts to be assembled" applies when the formulas under para. B4 are used. Also clarified is the point that the total positional tolerances of both holes ($2T$) can be separated into T_1 and T_2 in any appropriate manner such that $2T = T_1 + T_2$.
- New coverage and formulas replace and are added giving "provision for out-of-squareness when projected tolerance zone is not used" on features such as threaded holes or dowel holes.

A11 APPENDIX C, FORM, PROPORTION, AND COMPARISON OF SYMBOLS

- The explanatory text is reworded and condensed for clarity.
- The universal ISO datum feature symbol replaces the former one. The "symmetry" symbol is reinstated and the "regardless of feature size" (RFS) symbol is removed.
- New symbols introduced:
  tangent plane
  free state
  controlled radius
  between
  statistical tolerance
- Symbols added under the ISO column in the Comparison of Symbols chart:
  all around (proposed)
  least material condition
  tangent plane (proposed)
  free state
  dimension origin
  arc length
  spherical radius
  spherical diameter

A12 APPENDIX D, FORMER PRACTICES

- Information on significant former practices once featured in the 1982 issue of this Standard is provided along with related illustrations.

A13 APPENDIX E, DECISION DIAGRAMS FOR GEOMETRIC CONTROL

- A new appendix is added to assist in the selection of proper geometric tolerancing controls and application. The diagram display will aid in the understanding of the coordinated flow of the geometric dimensioning and tolerancing system.

Copyright ASME International
Provided by IHS under license with ASME
No reproduction or networking permitted without license from IHS
Not for Resale

Copyright ASME International
Provided by IHS under license with ASME
No reproduction or networking permitted without license from IHS

Not for Resale

APPENDIX B
FORMULAS FOR POSITIONAL TOLERANCING

(This Appendix is not a part of ASME Y14.5M-1994.)

B1 GENERAL

The purpose of this Appendix is to present formulas for determining the required positional tolerances or the required sizes of mating features to ensure that parts will assemble. The formulas are valid for all types of features or patterns of features and will give a "no interference, no clearance" fit when features are at maximum material condition with their locations in the extreme of positional tolerance. Consideration must be given for additional geometric conditions that could affect functions not accounted for in the following formulas.

B2 FORMULA SYMBOLS

Formulas given herein use the five symbols listed below:

D = minimum depth of thread or minimum thickness of part with restrained or fixed fastener
F = maximum diameter of fastener (MMC limit)
H = minimum diameter of clearance hole (MMC limit)
P = maximum thickness of part with clearance hole, or maximum projection of fastener, such as a stud
T = positional tolerance diameter

Subscripts are used where more than one size feature or tolerance is involved.

B3 FLOATING FASTENER CASE

Where two or more parts are assembled with fasteners, such as bolts and nuts, and all parts have clearance holes for the bolts, it is termed the *floating fastener case*. See Fig. B-1. Where the fasteners are of the same diameter, and it is desired to use the same clearance hole diameters and the same positional tolerances for the parts to be assembled, the following formula applies:

$$H = F + T$$

or

$$T = H - F$$

EXAMPLE: Given that the fasteners in Fig. B-1 are 3.5 diameter maximum and the clearance holes are 3.94 diameter minimum, find the required positional tolerance:

$$T = 3.94 - 3.5$$

$$= 0.44 \text{ diameter for each part}$$

Any number of parts with different hole sizes and positional tolerances may be mated, provided the formula $H = F + T$ or $T = H - F$ is applied to each part individually.

B4 FIXED FASTENER CASE WHEN PROJECTED TOLERANCE ZONE IS USED

Where one of the parts to be assembled has restrained fasteners, such as screws in tapped holes or studs, it is termed the *fixed fastener case*. See Fig. B-2. Where the fasteners are of the same diameter and it is desired to use the same positional tolerance in each of the parts to be assembled, the following formula applies:

$$H = F + 2T$$

or

$$T = \frac{H - F}{2}$$

Note that the allowable positional tolerance for each part is one-half that for the comparable floating fastener case.

Copyright ASME International
Provided by IHS under license with ASME
No reproduction or networking permitted without license from IHS
Not for Resale

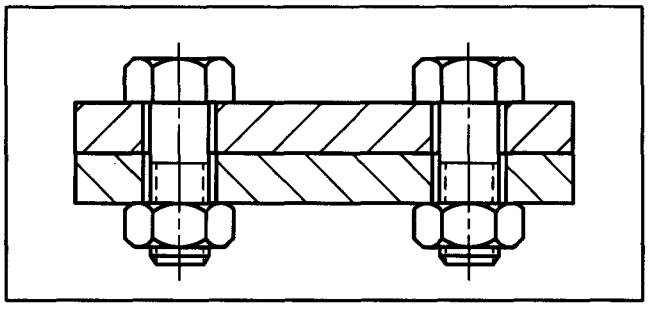

FIG. B-1 FLOATING FASTENERS

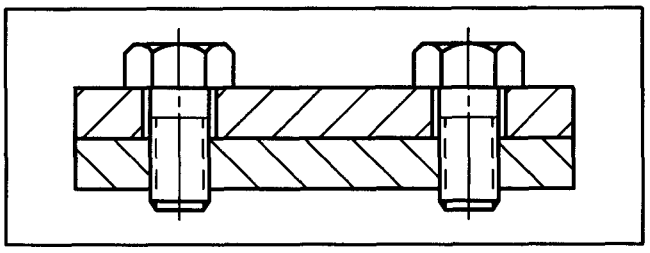

FIG. B-2 FIXED FASTENERS

EXAMPLE: Given that the fasteners in Fig. B-2 have a maximum diameter of 3.5 and the clearance holes have a minimum diameter of 3.94, find the required positional tolerance:

$$T = \frac{3.94 - 3.5}{2}$$

$$= 0.22 \text{ diameter for each part}$$

Where it is desired that the part with tapped holes have a larger positional tolerance than the part with clearance holes, the total positional tolerance of both holes ($2T$) can be separated into T_1 and T_2 in any appropriate manner such that

$$2T = T_1 + T_2$$

EXAMPLE: T_1 could be 0.18, then T_2 would be 0.26.

The general formula for the fixed fastener case where two mating parts have different positional tolerances is

$$H = F + T_1 + T_2$$

The preceding formulas do not provide sufficient clearance for the fixed fastener case when threaded holes or holes for tight fitting members, such as dowels, are out of square. To provide for this condition, the projected tolerance zone method of positional tolerancing should be applied to threaded holes or tight fitting holes. See Section 5.

B5 PROVISION FOR OUT-OF-SQUARENESS WHEN PROJECTED TOLERANCE ZONE IS NOT USED

When the projected tolerance zone system is not used, it is required to select a positional tolerance and clearance hole combination that compensates for the allowable out-of-squareness of the part that contains the fixed fastener. The following formula is applicable:

$$H = F + T_1 + T_2\left(1 + \frac{2P}{D}\right)$$

where

T_1 = positional tolerance diameter of clearance hole
T_2 = positional tolerance diameter of tapped or tight fitting holes
D = the minimum depth of engagement of threaded or tight fitting member
P = maximum projection of fastener

EXAMPLE: Given that the fasteners in Fig. B-2 have the maximum diameter of 6.35 (F), the positional tolerance of the clearance hole is 0.2 (T_1), the positional tolerance of the tapped hole is 0.4 (T_2), the maximum thickness of the plate with the clearance hole is 12.0 (P), and the minimum thickness of the plate with the tapped hole is 8.0 (D), find the required clearance hole size (H).

$$H = F + T_1 + T_2\left(1 + \frac{2P}{D}\right)$$

$$= 6.35 + 0.2 + 0.4\left(1 + \frac{2 \times 12}{8}\right)$$

$$= 6.35 + 0.2 + 0.4\ (1 + 3)$$

$$= 6.35 + 0.2 + 0.4\ (4)$$

$$= 6.35 + 0.2 + 1.6$$

$$= 8.15$$

Copyright ASME International
Provided by IHS under license with ASME
No reproduction or networking permitted without license from IHS
Not for Resale

B6 COAXIAL FEATURES

The formula previously given for the floating fastener case also applies to mating parts having two coaxial features where one of these features is a datum for the other. See Fig. B-3. Where it is desired to divide the available tolerance unequally between the parts, the following formula is useful:

$$H_1 + H_2 = F_1 + F_2 + T_1 + T_2$$

(This formula is valid only for simple two-feature parts as shown here. Consideration must be given for other geometric conditions that may be required for function.)

EXAMPLE: Given the information shown in Fig. B-3, solve for T_1 and T_2:

$$H_1 + H_2 = F_1 + F_2 + T_1 + T_2$$

$$T_1 + T_2 = (H_1 + H_2) - (F_1 + F_2)$$

$$= (20 + 10) - (19.95 + 9.95)$$

$$= 0.1 \text{ total available tolerance}$$

If $T_1 = 0.06$, then $T_2 = 0.04$.

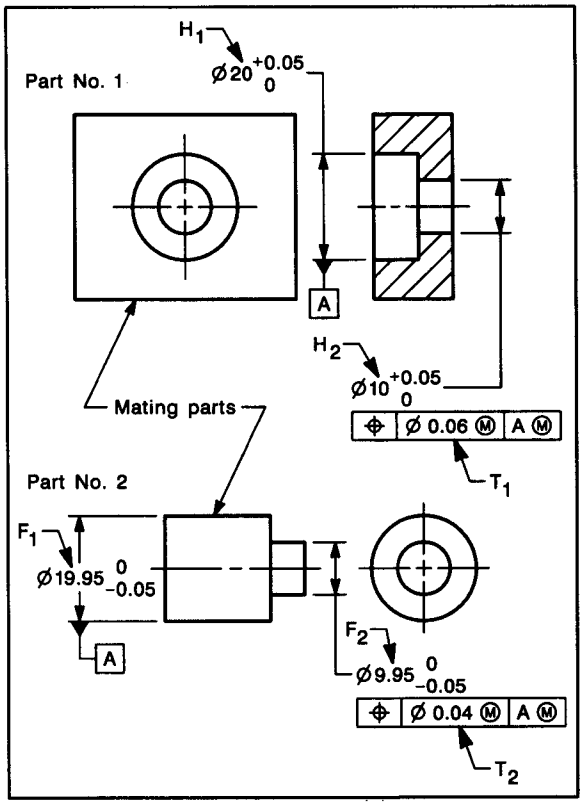

FIG. B-3 COAXIAL FEATURES

B7 LIMITS AND FITS

The formulas for positional tolerancing are also applicable where requirements for the size and fit of mating features are specified by symbols. See ANSI B4.2, which explains the use of symbols. For preferred sizes and fits, tables are provided therein giving the appropriate MMC limits. For other fit conditions, these limits must be calculated using tables in the appendix that list deviations from the basic size for each tolerance zone symbol (alphanumeric designation).

EXAMPLE: Given the parts shown in Fig. B-3, where requirements for mating features are specified as follows:

$20H9$ in place of $20^{+0.05}_{0}$

$20d9$ in place of $19.95^{0}_{-0.05}$

$10H9$ in place of $10^{+0.05}_{0}$

$10d9$ in place of $9.95^{0}_{-0.05}$

Tables A5 and A14 of ANSI B4.2 show the following.

(a) For basic sizes 20 and 10,

Fundamental Deviation $H = 0$

(b) For basic size 20,

Fundamental Deviation $d = -0.065$

(c) For basic size 10,

Fundamental Deviation $d = -0.040$

These deviations must be applied to the basic size to obtain the MMC limits.

$$H_1 = 20 + 0 = 20$$

Copyright ASME International
Provided by IHS under license with ASME
No reproduction or networking permitted without license from IHS
Not for Resale

$$H_2 = 10 + 0 = 10$$

$$F_1 = 20.000 - 0.065 = 19.935$$

$$F_2 = 10.000 - 0.040 = 9.960$$

Note that the above calculated values can be found directly in Table 2 of ANSI B4.2 since the requirements for this example are preferred sizes and fits. These MMC values are inserted in the formula as before:

$$T_1 + T_2 = (20 + 10) - (19.935 + 9.960)$$

$$= 0.105$$

$$= 0.1 \text{ rounded downward}$$

This total available tolerance may be divided in any desired manner, such as

$$T_1 = 0.06$$

$$T_2 = 0.04$$

Copyright ASME International
Provided by IHS under license with ASME
No reproduction or networking permitted without license from IHS
Not for Resale

APPENDIX C
FORM, PROPORTION, AND COMPARISON OF SYMBOLS

(This Appendix is not a part of ASME Y14.5M-1994.)

C1 GENERAL

The purpose of this Appendix is to present the recommended form and proportion for symbols used in dimensioning and tolerancing applications.

C2 FORM AND PROPORTION

Figures C-1 and C-2 illustrate the preferred form and proportion of symbols established by this Standard for use on engineering drawings. The symbols are grouped to illustrate similarities in the elements of their construction. In both figures, symbol proportions are given as a factor of h, where h is the letter height selected for use within the enclosing symbols. See ASME Y14.2M for line weights, letter heights, and arrow head proportions.

EXAMPLE:

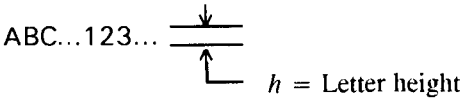

C3 COMPARISON

Figure C-3 provides a comparison of the symbols adopted by this Standard with those contained in international standards such as ISO 1101, 129, and 3040.

Copyright ASME International
Provided by IHS under license with ASME
No reproduction or networking permitted without license from IHS
Not for Resale

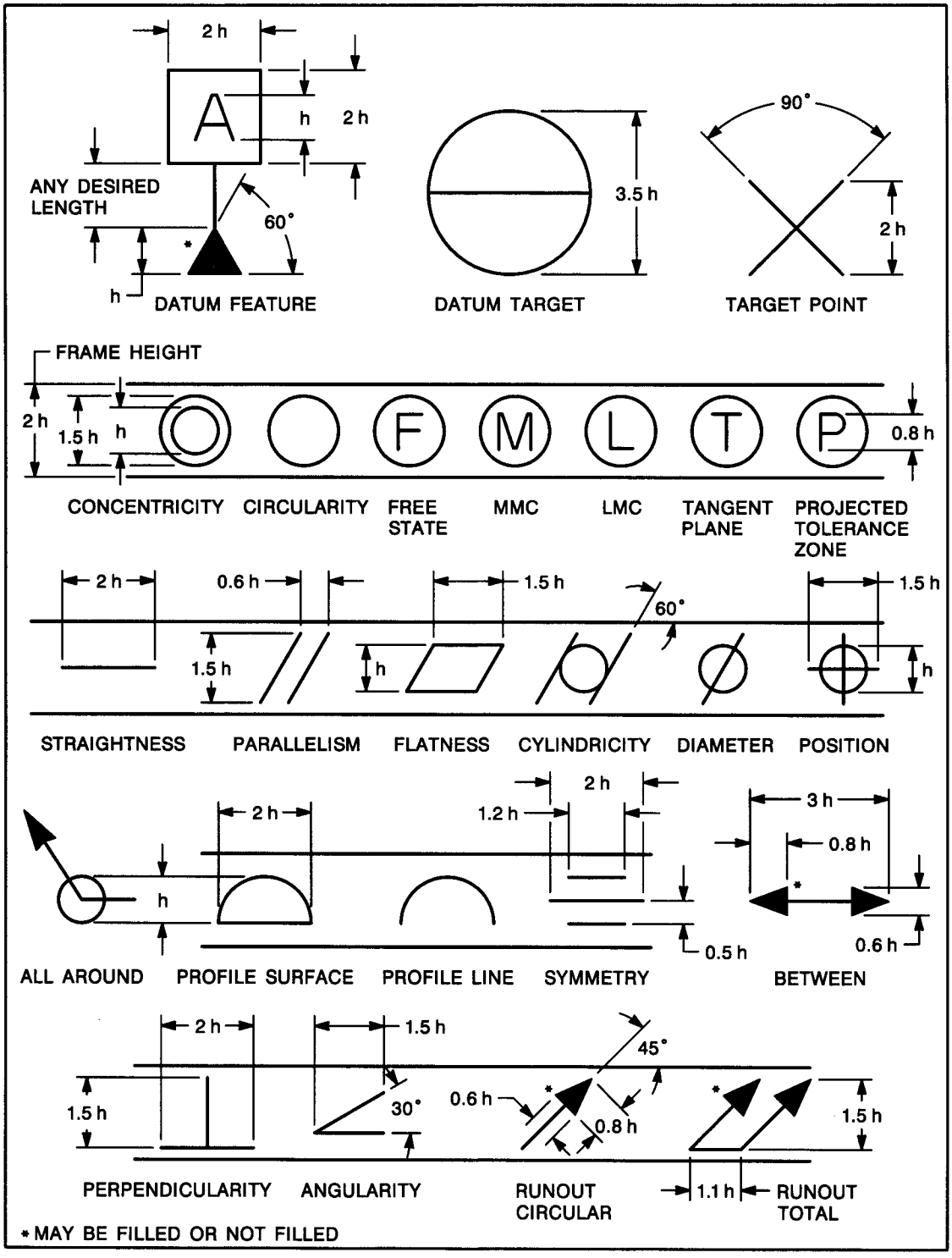

FIG. C-1 FORM AND PROPORTION OF GEOMETRIC TOLERANCING SYMBOLS

Copyright ASME International
Provided by IHS under license with ASME
No reproduction or networking permitted without license from IHS
Not for Resale

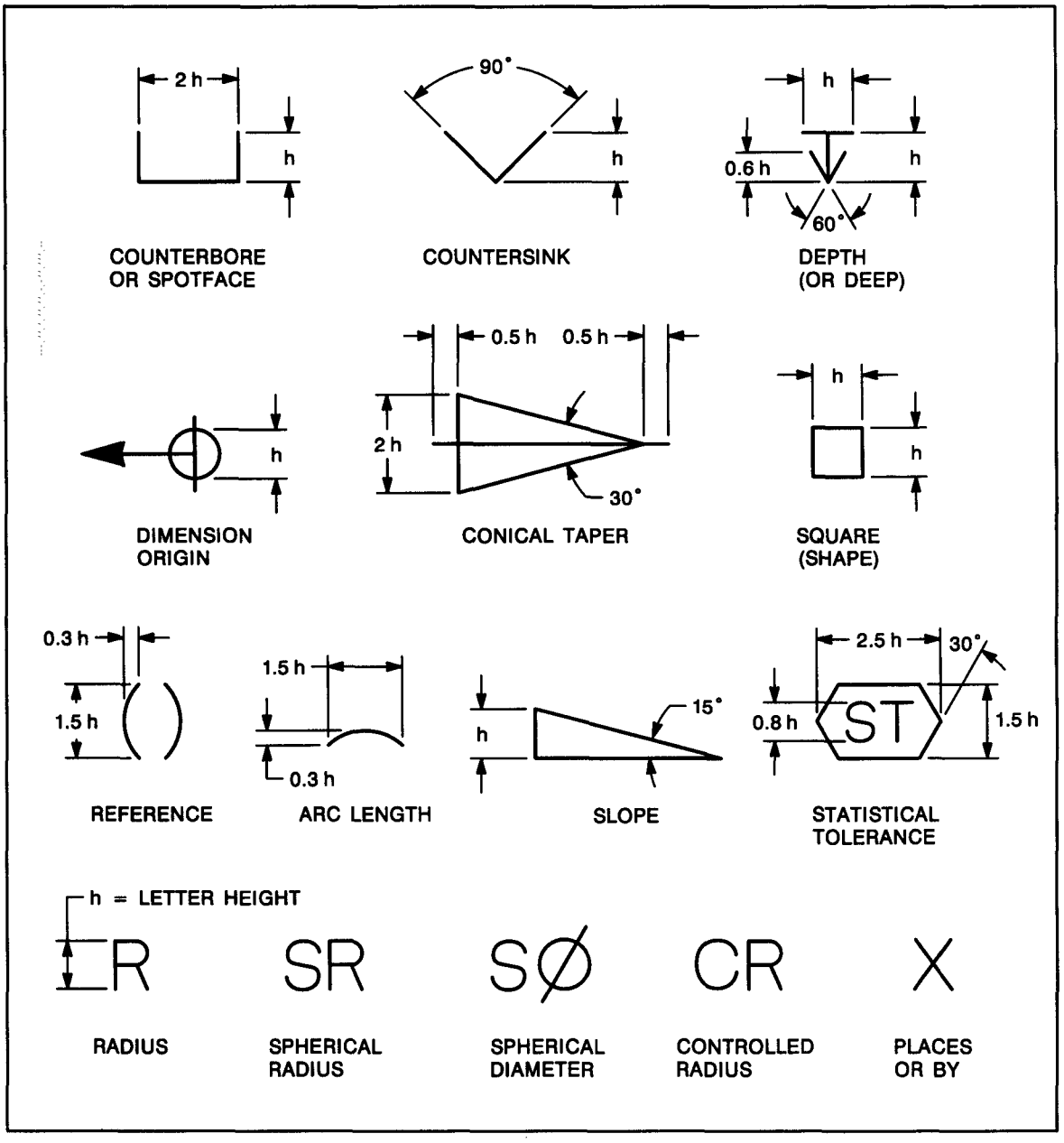

FIG. C-2 FORM AND PROPORTION OF DIMENSIONING SYMBOLS AND LETTERS

Copyright ASME International
Provided by IHS under license with ASME
No reproduction or networking permitted without license from IHS
Not for Resale

SYMBOL FOR:	ASME Y14.5M	ISO
STRAIGHTNESS		
FLATNESS		
CIRCULARITY		
CYLINDRICITY		
PROFILE OF A LINE		
PROFILE OF A SURFACE		
ALL AROUND		 (proposed)
ANGULARITY		
PERPENDICULARITY		
PARALLELISM		
POSITION		
CONCENTRICITY (concentricity and coaxiality in ISO)		
SYMMETRY		
CIRCULAR RUNOUT		
TOTAL RUNOUT		
AT MAXIMUM MATERIAL CONDITION		
AT LEAST MATERIAL CONDITION		
REGARDLESS OF FEATURE SIZE	NONE	NONE
PROJECTED TOLERANCE ZONE		
TANGENT PLANE		 (proposed)
FREE STATE		
DIAMETER		
BASIC DIMENSION (theoretically exact dimension in ISO)		
REFERENCE DIMENSION (auxiliary dimension in ISO)	(50)	(50)
DATUM FEATURE		or

* MAY BE FILLED OR NOT FILLED

FIG. C-3 COMPARISON OF SYMBOLS

Copyright ASME International
Provided by IHS under license with ASME
No reproduction or networking permitted without license from IHS
Not for Resale

SYMBOL FOR:	ASME Y14.5M	ISO
DIMENSION ORIGIN		
FEATURE CONTROL FRAME	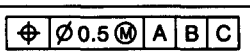	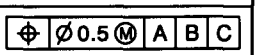
CONICAL TAPER		
SLOPE		
COUNTERBORE/SPOTFACE		 (proposed)
COUNTERSINK		 (proposed)
DEPTH/DEEP		 (proposed)
SQUARE		
DIMENSION NOT TO SCALE	15	15
NUMBER OF PLACES	8X	8X
ARC LENGTH		
RADIUS	R	R
SPHERICAL RADIUS	SR	SR
SPHERICAL DIAMETER	SØ	SØ
CONTROLLED RADIUS	CR	NONE
BETWEEN		NONE
STATISTICAL TOLERANCE		NONE
DATUM TARGET		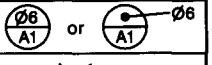
TARGET POINT		

* MAY BE FILLED OR NOT FILLED

FIG. C-3 COMPARISON OF SYMBOLS (CONT'D)

Copyright ASME International
Provided by IHS under license with ASME
No reproduction or networking permitted without license from IHS
Not for Resale

Copyright ASME International
Provided by IHS under license with ASME
No reproduction or networking permitted without license from IHS
Not for Resale

APPENDIX D
FORMER PRACTICES

(This Appendix is not a part of ASME Y14.5M-1994.)

D1 GENERAL

The purpose of this Appendix is to identify and illustrate former symbols, terms, and methods of dimensioning featured in ANSI Y14.5M-1982. For information on changes and improvements, see Appendix A and the Foreword. The following information is provided to assist in the interpretation of existing drawings on which former practices may appear.

D2 DEFINITION FOR FEATURE OF SIZE

The former definition for a *feature of size* was stated as follows: "One cylindrical or spherical surface, or a set of two plane parallel surfaces, each of which is associated with a size dimension." The former definition did not specify a requirement for the two parallel surfaces to be opposed. For the present definition, see para. 1.3.17.

D3 APPLICABILITY OF RFS, MMC, AND LMC

In this issue of the Standard, the RFS symbol is no longer required to indicate "regardless of feature size" for a tolerance of position. See Fig. D-1. Both former Rules #2 and #3 have been replaced by a single new Rule #2. Former Rules #2 and #3 were stated as follows:

(a) Tolerances of Position (Rule #2). RFS, MMC, or LMC must be specified on the drawing with respect to the individual tolerance, datum reference, or both, as applicable.

(b) All Other Geometric Tolerances (Rule #3). RFS applies with respect to the individual tolerance, datum reference, or both, where no modifying symbol is specified. MMC must be specified on the drawing where it is required.

For the present Rule #2, see para. 2.8(a).

D4 TANGENT RADII

The definition of the tolerance zone for the former term *tangent radius*, previously noted by the symbol R is now meant to apply to a *controlled radius* (symbol CR). See Fig. D-2. For the method of indicating a controlled radius, see para. 2.15.2. For the present definition of the tolerance zone created by the term *radius* (symbol R), see para. 2.15.1.

D5 DATUM FEATURE SYMBOL

The former datum feature symbol consisted of a frame containing the datum identifying letter preceded and followed by a dash. See Figs. D-3 and D-4. For the current practice, see para. 3.3.2.

D6 PROJECTED TOLERANCE ZONE

A former method of indicating a projected tolerance zone is illustrated in Fig. D-5. The projected tolerance zone symbol was placed in a frame and attached to the lower edge of the applicable feature control frame. For the present practice, see paras. 3.4.7 and 5.5.2.

Copyright ASME International
Provided by IHS under license with ASME
No reproduction or networking permitted without license from IHS
Not for Resale

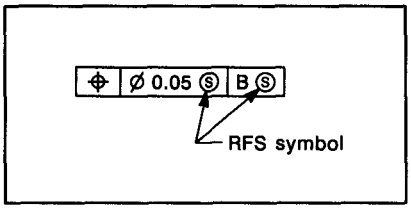

FIG. D-1 FORMER RFS SYMBOL APPLIED TO A FEATURE AND DATUM

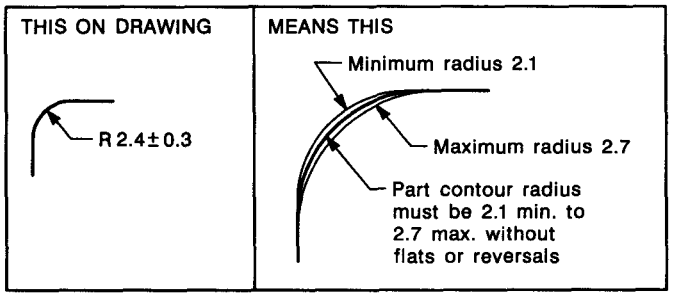

FIG. D-2 FORMER INTERPRETATION OF THE TOLERANCE ZONE CREATED BY THE SYMBOL R

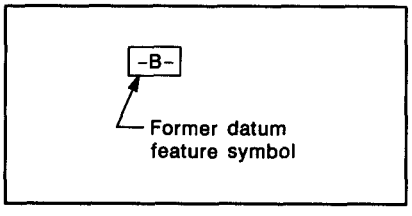

FIG. D-3 FORMER DATUM FEATURE SYMBOL

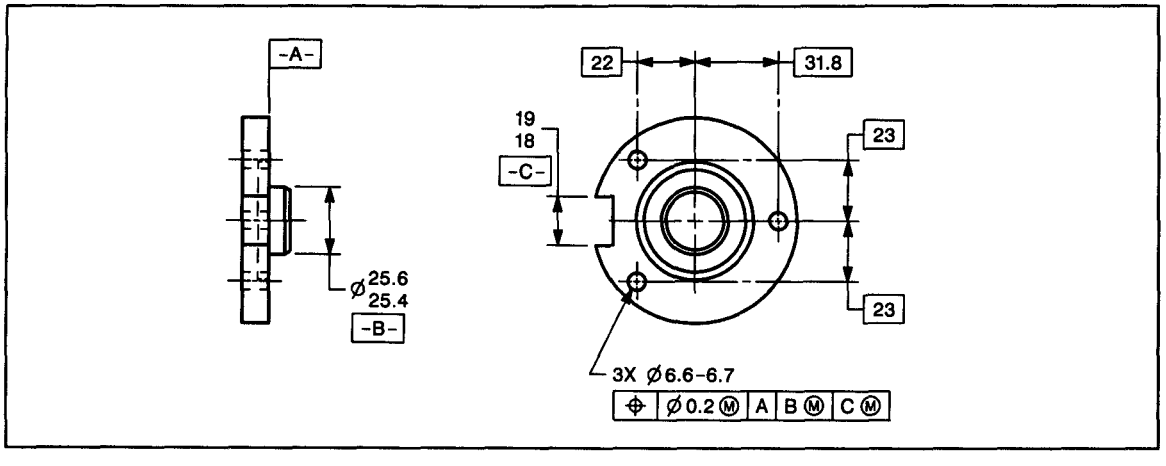

FIG. D-4 EXAMPLE OF FORMER DATUM FEATURE SYMBOL APPLICATIONS

Copyright ASME International
Provided by IHS under license with ASME
No reproduction or networking permitted without license from IHS
Not for Resale

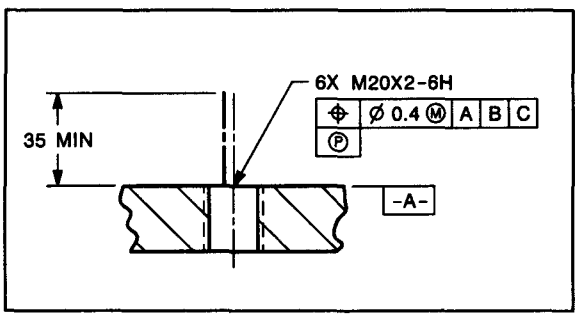

FIG. D-5 FORMER METHOD OF INDICATING A PROJECTED TOLERANCE ZONE

Copyright ASME International
Provided by IHS under license with ASME
No reproduction or networking permitted without license from IHS
Not for Resale

Copyright ASME International
Provided by IHS under license with ASME
No reproduction or networking permitted without license from IHS
Not for Resale

APPENDIX E
DECISION DIAGRAMS FOR GEOMETRIC CONTROL

(This Appendix is not a part of ASME Y14.5M-1994.)

E1 PURPOSE

The purpose of this Appendix is to assist the user in selecting the correct geometric characteristic for a particular application. Decision diagrams have been developed that are based on design requirements and the application of datums, geometric controls, and modifiers. The diagrams encourage the user to think in terms of design intent and functional requirements, and assist in the development of the contents of feature control frames.

E2 FUNCTIONAL REQUIREMENTS

When documenting design intent, the user must consider both the stabilization of the part and the functional requirements of the individual features. See Fig. E-1. In dealing with Individual Features, both Form and Profile controls must be considered. If the application deals with Related Features, then Location, Orientation, Runout, and Profile controls must be considered.

E2.1 Type of Application. Once the type of application is determined, the user is directed to more specific diagrams. These diagrams prompt additional user decisions, such as what needs to be controlled (center plane, axis, or surface), functional tolerance to be met, applicable modifiers, and necessary datum relationships.

E3 REFERENCE TO STANDARD

A reference is shown in many diagram boxes to the appropriate section within ASME Y14.5M-1994 that contains specific information concerning that control.

E4 GEOMETRIC CONTROLS

The box titled "Consider Limits of Size" serves as a reminder to examine the size limits before applying additional form controls. See Fig. E-2. As stated in para. 2.7.1, the dimensional limits of a feature of size may also serve to control the allowable variations in form (Rule #1). When this is the case, and the functional requirements of the design are met, no additional form controls are needed.

E4.1 Choosing Form Controls. Assuming that form controls are necessary, the diagrams lead the user through the various applications and suggest a variety of possible choices, as dictated by the design function. See Fig. E-2.

E5 CHOOSING OTHER CONTROLS

Other aspects of each feature of a part must be considered for their location, orientation, runout, and profile as they relate to other features. The diagrams shown in Figs. E-3 through E-6 have been developed to guide the user through the appropriate selection processes.

E6 USE OF MODIFIERS

Modifiers are an integral part of geometric controls, but are only applicable when utilizing features of size. If a modifier is not applicable to the geometric characteristic, modifiers are not included in the decision diagrams. See Figs. E-2, E-3, E-4, and E-7. In the cases where modifiers are applicable, the diagrams prompt decisions as to which modifiers are appropriate.

E7 DATUMS

Like modifiers, datums do not apply to all geometric characteristics. Datums do not apply to form controls. If datums do not apply, they are not addressed

Copyright ASME International
Provided by IHS under license with ASME
No reproduction or networking permitted without license from IHS
Not for Resale

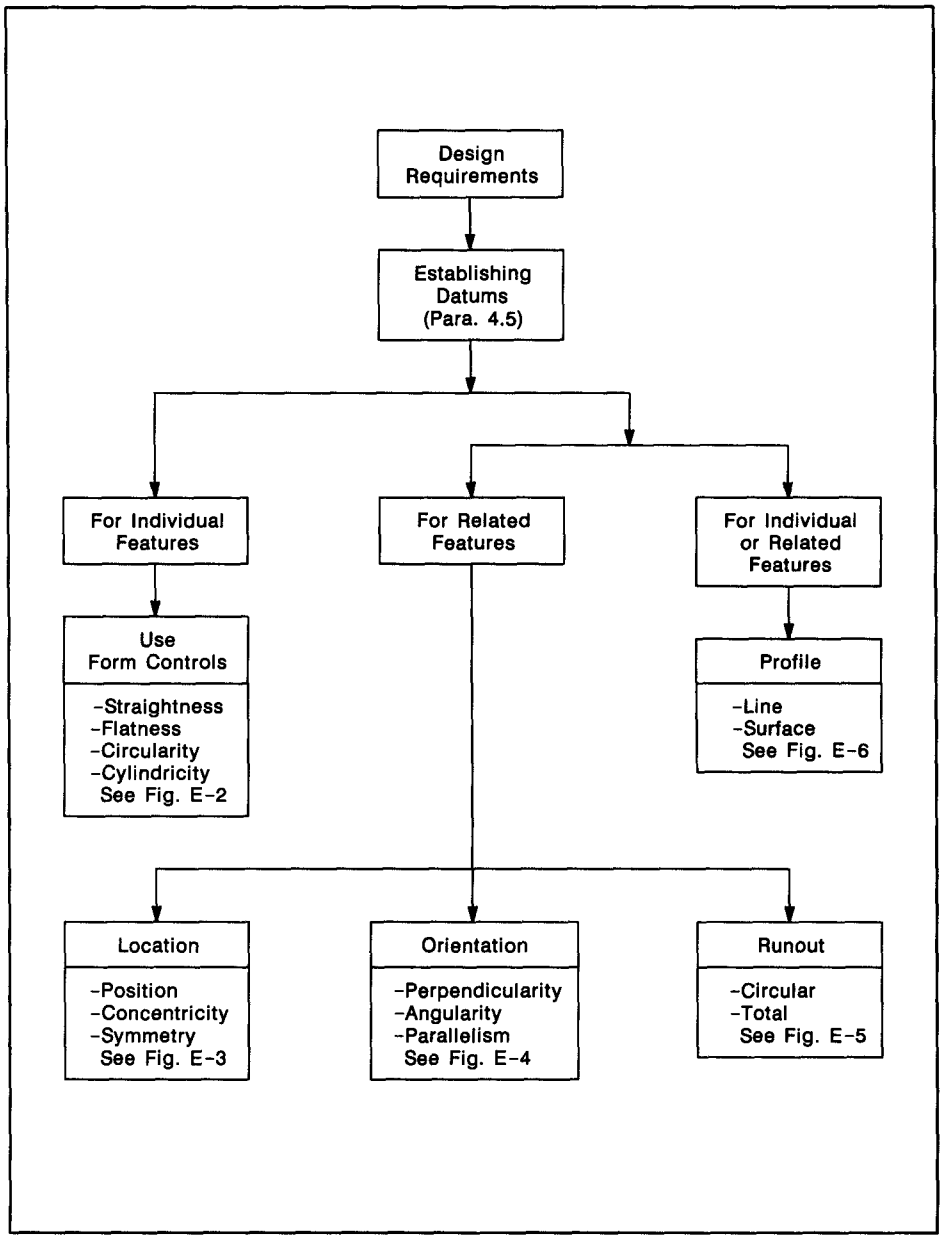

FIG. E-1 DESIGN REQUIREMENTS

Copyright ASME International
Provided by IHS under license with ASME
No reproduction or networking permitted without license from IHS
Not for Resale

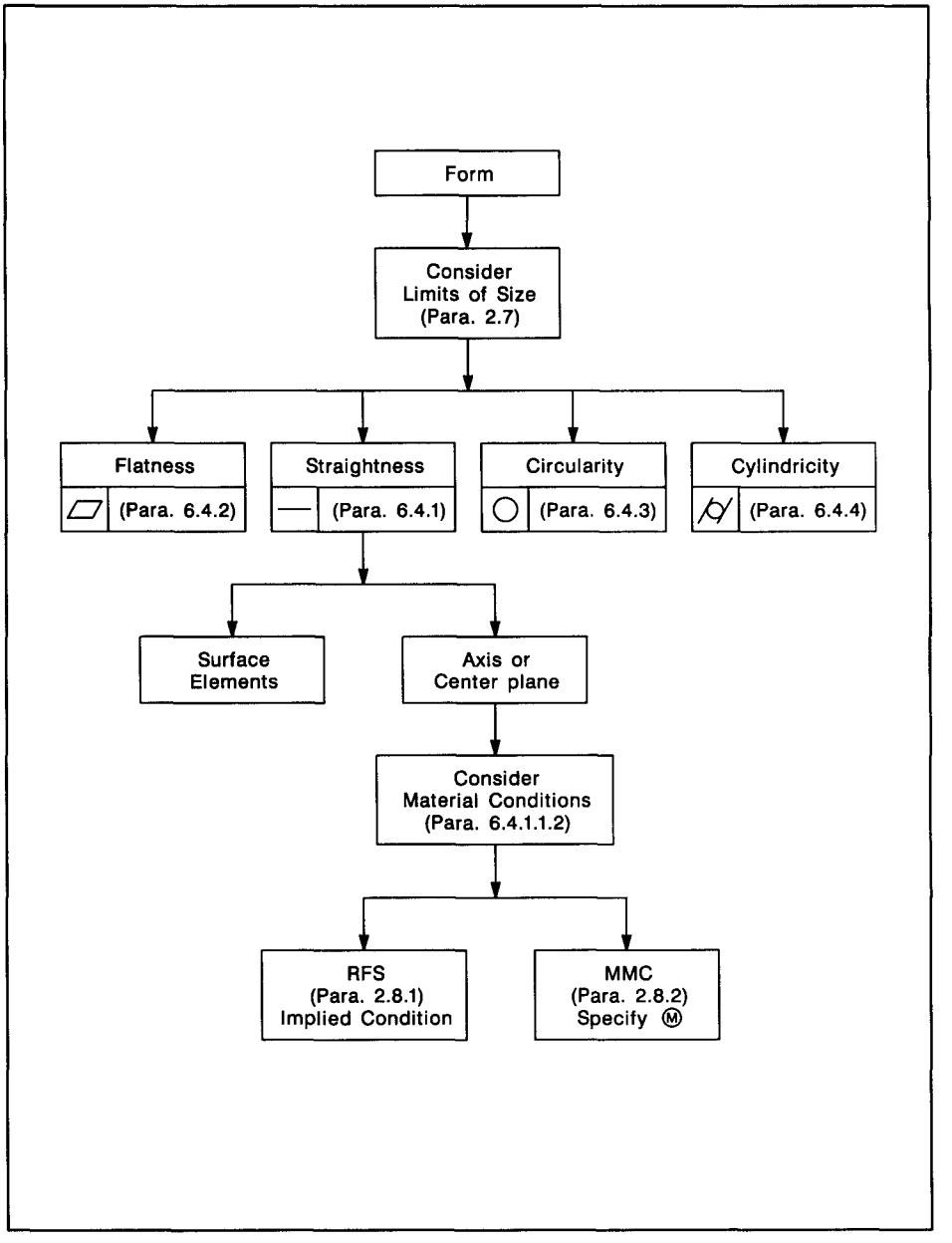

FIG. E-2 FORM

Copyright ASME International
Provided by IHS under license with ASME
No reproduction or networking permitted without license from IHS
Not for Resale

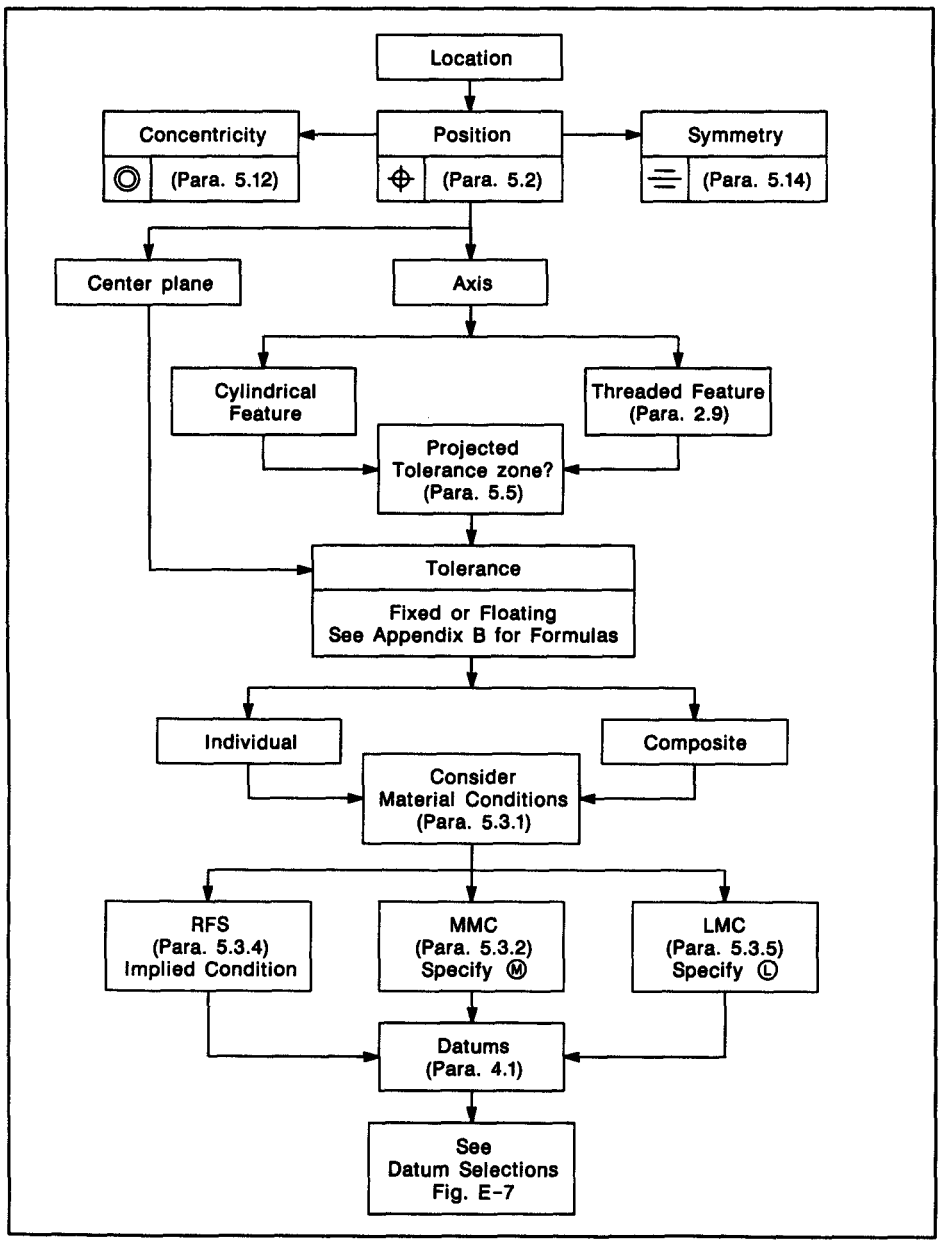

FIG. E-3 LOCATION

Copyright ASME International
Provided by IHS under license with ASME
No reproduction or networking permitted without license from IHS
Not for Resale

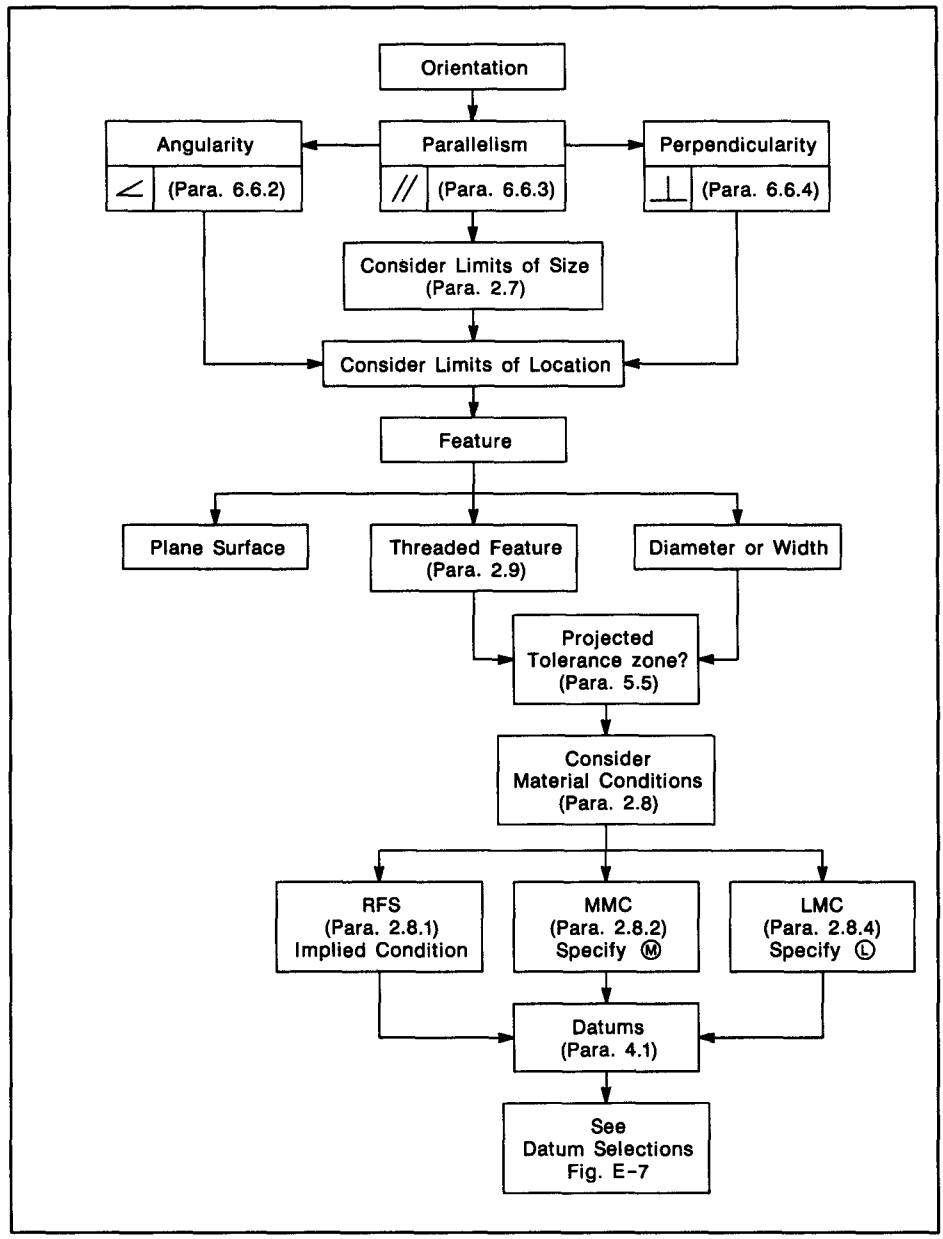

FIG. E-4 ORIENTATION

Copyright ASME International
Provided by IHS under license with ASME
No reproduction or networking permitted without license from IHS
Not for Resale

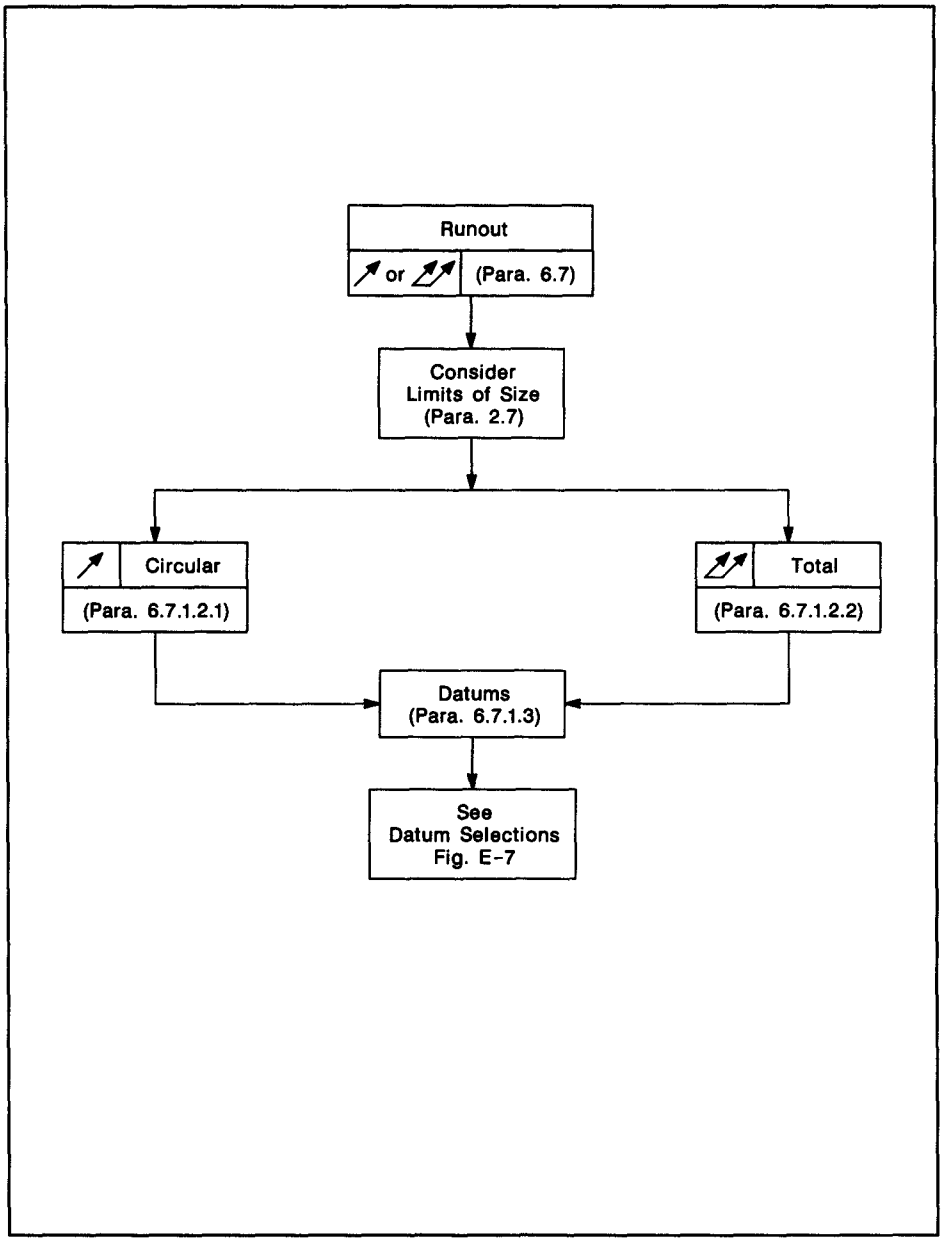

FIG. E-5 RUNOUT

Copyright ASME International
Provided by IHS under license with ASME
No reproduction or networking permitted without license from IHS
Not for Resale

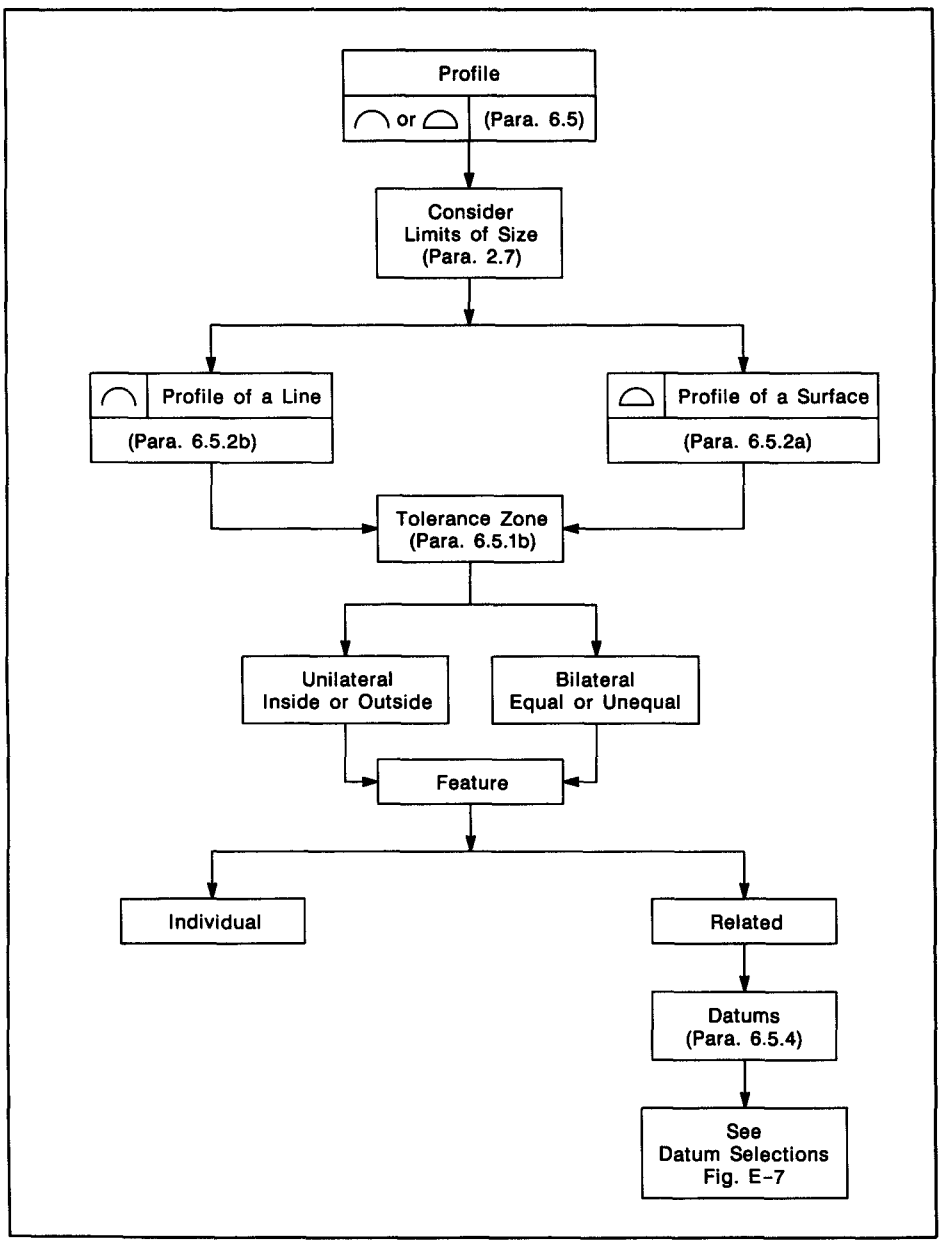

FIG. E-6 PROFILE

Copyright ASME International
Provided by IHS under license with ASME
No reproduction or networking permitted without license from IHS
Not for Resale

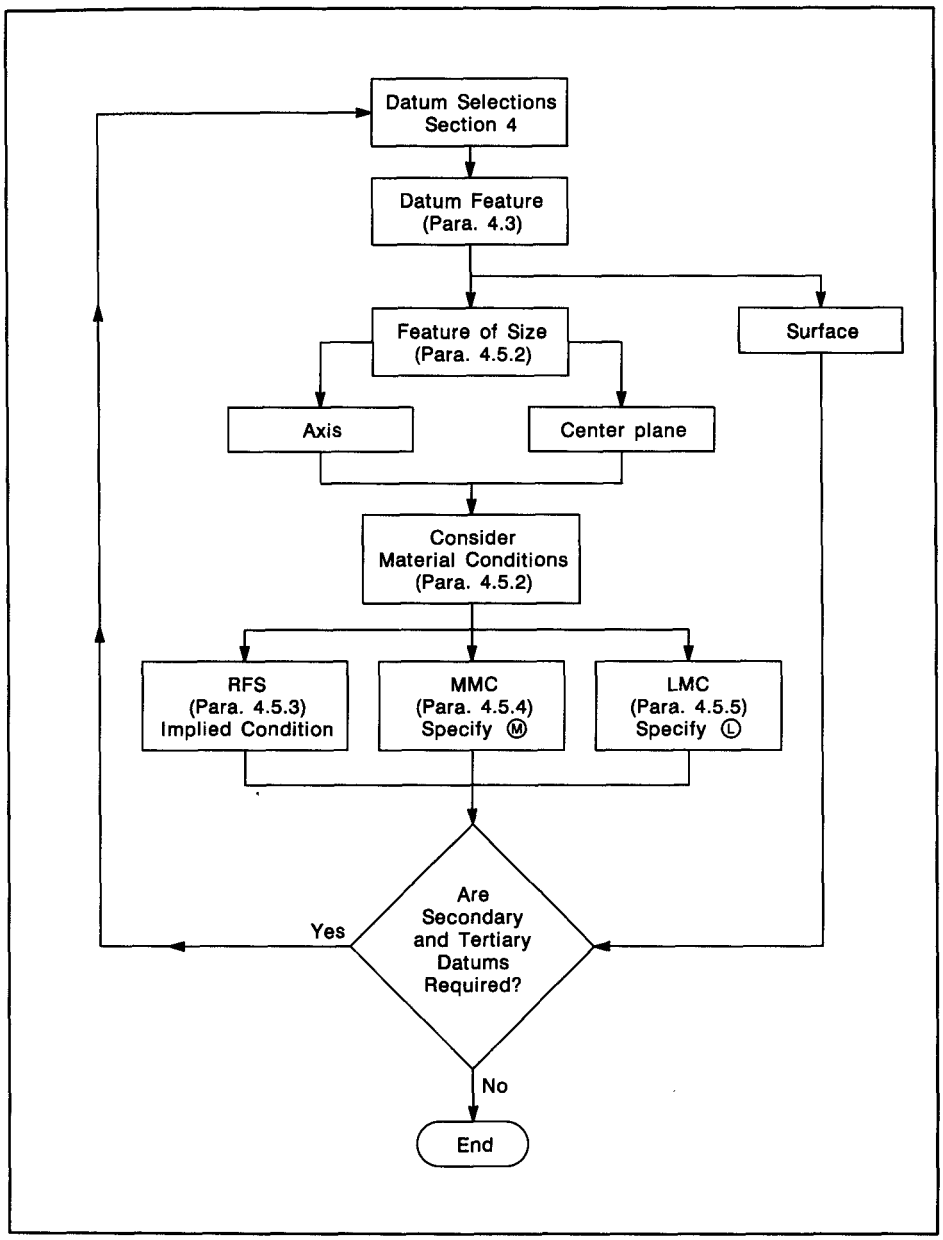

FIG. E-7 DATUM SELECTIONS

Copyright ASME International
Provided by IHS under license with ASME
No reproduction or networking permitted without license from IHS
Not for Resale

in the diagrams. When datums are applicable, the user is referred to Fig. E-7.

E7.1 Datum Modifiers. When a feature of size has been selected as a datum, a material condition modifier must be considered. See Fig. E-7 and para. 2.8.

E7.2 Multiple Datums. Some applications require only a primary datum, while others may need secondary and tertiary datums. When more than one datum is needed, the diagrams loop back until the datum reference framework is complete. See Fig. E-7.

Copyright ASME International
Provided by IHS under license with ASME
No reproduction or networking permitted without license from IHS
Not for Resale

Copyright ASME International
Provided by IHS under license with ASME
No reproduction or networking permitted without license from IHS
Not for Resale

INDEX

A

American National Standards 1.2
Angular Units 1.5.4
Arrowheads 1.7.1–1.7.2, 1.9.2
Average Diameter 6.8.3
Axis
  Datum Axis 6.7.1, A6

B

Bilateral 2.3.1–2.3.2, 6.5.1, A4, A8
Boundary
  Inner 1.3.1
  Outer 1.3.2

C

Castings and Forgings 1.2, 1.8.22, A3
Centering 2.8.1, 4.5.3, 4.6.4–4.6.5
Circularity 4.5.4, 6.2, 6.4, 6.4.3–6.4.4, 6.7.1, 6.8.3
Composite Profile 6.5.9
Concentricity 2.8, 5.1, 5.12, A4, A7
Coplanarity 4.5.7, 6.5.6
Conversion and Rounding of Linear Units 1.6.4
Counterbored Holes 1.8.11, 5.7
Counterdrilled Holes 1.8.12, A3
Countersunk Holes 1.8.12, A3
Coaxial 2.7.3, 4.5.7, 5.1, 5.4.1, 5.11–5.11.1, 6.7.1
Computer-Aided A9
Cylindrical Datum Features 4.4.2
Cylindricity 4.5.4, 6.2, 6.4, 6.4.4, 6.7.1

D

D-Shaped Feature 5.10.1
Datum
  Datum Feature Simulator 1.3.5, A6
  Datum Target 1.3.7
  Simulated 1.3.5–1.3.6, 4.2.1–4.2.2, 4.4.1–4.4.2, 4.5.1, 4.5.3–4.5.5, 4.5.7, A3, A6
Datum Axis 6.7.1, A6
Datum Feature 1.3.4, 4.5.3–4.5.4, 6.7.1
Datum Reference Frame 4.2.2, A6
Datum Referencing
  Cylindrical Datum Features 4.4.2
  Datum Axis and Two Planes 4.4.2
Datum Feature 1.3.4, 4.5.3–4.5.4, 6.7.1
Datum Feature Controls 4.3.3
Datum Feature Identification 4.3.2
Datum Reference Frame 4.2.2, A6
Datum Target Dimensions 4.6.2
Establishing Datums
  Datum Features Not Subject to Size Variations 4.5.1
  Datum Features Subject to Size Variations 4.5.2
  Partial Surfaces as Datum Features 4.5.10
  Specifying Datum Features at LMC 4.5.5
  Specifying Datum Features at MMC 4.5.4
  Specifying Datum Features RFS 4.5.3
Functional Datum Features 4.5.11
Multiple Datum Features 4.5.7
  Pattern of Features 4.5.8
  Simulation of a Single Datum Plane 4.5.7
  Single Axis of Two Coaxial Features 4.5.7
Multiple Datum Reference Frames 4.5.11
Orientation of Two Planes 4.4.2
Parts With Inclined Datum Features 4.4.1
Positioning Parts With Plane Surface Datum Features 4.4.1
Rotational Orientation 4.4.3
Simultaneous Requirements 4.5.12
Temporary and Permanent Datum Features 4.3.1
Datum Targets
  Circular and Cylindrical Targets 4.6.4
  Datum Planes Established by Datum Targets 4.6.3
  Datum Target Areas 4.6.1
  Datum Target Lines 4.6.1
  Datum Target Points 4.6.1
  Datum Target Symbols 4.6.1
  Equalizing Datums 4.6.6
  Primary Datum Axis 4.6.4
  Secondary Datum Axis 4.6.5
  Stepped Surfaces 4.6.3
Definitions 1.3
Dimension
  Basic 1.3.9
  Reference 1.3.10, 1.7.7
Dimensioning
  Decimal Inch Dimensioning 1.6.2

Copyright ASME International
Provided by IHS under license with ASME
No reproduction or networking permitted without license from IHS
Not for Resale

Dimensioning (Cont'd)
Decimal Points 1.6.3
Dimension Lines 1.7.1, 1.9.2
Dimensioning Features
Chamfers 1.8.15, 2.5
Chords, Arcs, and Angles 1.8.3
Counterbored Holes 1.8.11, 5.7
Counterdrilled Holes 1.8.12, A3
Countersunk Holes 1.8.12
Diameters 1.8.1, 2.13, 4.3.1, 4.5.2–4.5.3, 4.5.7, 5.11.1, 6.7.1, 6.8.3, B3
Grid System 1.8.7
Irregular Outlines 1.8.7
Keyseats 1.8.16
Knurling 1.2, 1.8.17
Machining Centers 1.8.14
Outlines Consisting of Arcs 1.8.6
Radii 1.8.2, 1.8.4, 1.8.6, 1.8.10, 1.8.18, 2.5, 2.15.1–2.15.2, 6.5, D4
Rods and Tubing Details 1.8.18
Round Holes 1.8.9, 1.8.15
Rounded Corners 1.8.5
Rounded Ends 1.8.4
Slotted Holes 1.8.10
Spotfaces 1.8.13
Surface Texture 1.2, 1.8.20
Symmetrical Outlines 1.8.8
Dimensions Not to Scale 1.7.9
Extension lines 1.7, 1.7.2, 1.7.5, 1.7.8, 1.8.2, 1.9.2
Leaders 1.7, 1.7.4, 6.7.1
Limited Length 1.7.3
Millimeter Dimensioning 1.6.1
Overall Dimensions 1.7.7
Polar Coordinate Dimensioning 1.9.4
Reading Direction 1.7.5
Rectangular Coordinate Dimensioning 1.9.1–1.9.2
Reference Dimensions 1.7.6
Repetitive Features 1.9.5
Tabular Dimensioning 1.9.3
Use of X (By) 1.9.6

E

Envelope, Actual Mating 1.3.11
Equalizing 4.6.6, A6

F

Feature
External 1.3.11
Axis 1.3.13
Center Plane 1.3.14
Derived Median Line of 1.3.16
Derived Median Plane of 1.3.15
Internal 1.3.11
Size of 1.4, 2.7–2.7.1
Feature Control Frame 3.4.1–3.4.4, 3.4.6–3.4.7
Feature of Size 1.3.17, 2.7.1, A7–A8
Features to be Restrained 6.8.2
Flatness 2.7.1, 6.2–6.3, 6.4, 6.4.2, 6.5.6, 6.6.1, 6.7.1
Forgings 1.8.22, 4.3.1, A3
Form and Orientation Control
Average Diameter 6.8.3
Composite Profile 6.5.9
Coplanarity 4.5.7, 6.5.6
Form and Orientation Tolerance Zones 6.3.1
Form Tolerances
Circularity 4.5.4, 6.2, 6.4, 6.4.3–6.4.4, 6.7.1, 6.8.3
Cylindricity 4.5.4, 6.2, 6.4, 6.4.4, 6.7.1
Flatness 2.7.1, 6.2–6.3, 6.4, 6.4.2, 6.5.6, 6.6.1, 6.7.1
Straightness 2.7.1, 4.5.4, 6.2, 6.4–6.4.1, 6.4.4, 6.7.1, A4, A8
Geometric Tolerances on Features to be Restrained 6.8.2
Orientation Tolerances
Angularity 2.7.3, 2.12, 6.2, 6.6–6.6.2, 6.7.1, A8
In Relation to Datum Features 6.6.1
Parallelism 6.2, 6.5.5, 6.6–6.6.1, 6.6.3, 6.7.1, A8
Perpendicularity 2.7.3, 4.5.6, 5.4.1, 5.5–5.5.1, 5.9, 5.9.2, 6.2, 6.6–6.6.1, 6.6.4, 6.7.1
Profile Tolerances 6.5.1, 6.5.3, 6.5.6–6.5.8, A6
Runout ... 1.3.33, 2.1.1, 2.8, 5.11, 5.11.2, 6.1, 6.3.1, 6.5.5, 6.7–6.7.1, 6.8.2, A3–A4, A7–A8, E2, E5
Formulas
Coaxial Features B6
Fixed Fasteners B4
Floating Fasteners B3
Limits and Fits B7
FRTZF 5.4
Full Indicator Movement 1.3.18, 6.7.1

G

Gaging 1.1.6–1.2, 4.5.4, 4.6.2, A3
Gears and Involute Splines 1.8.21

H

Holes
Counterbored Holes 1.8.11
Counterdrilled Holes 1.8.12, A3
Countersunk Holes 1.8.12
Slotted Holes 1.8.10
Spotfaces 1.8.13

Copyright ASME International
Provided by IHS under license with ASME
No reproduction or networking permitted without license from IHS
Not for Resale

I

Interchangeability 5.3.2, 6.3
ISO A2, A4–A8, A11, C3

L

Least Material Condition 1.3.1–1.3.2, 1.3.19, 1.3.37, 2.7.1, 2.7.3–2.8, 2.8.2–2.8.5, 2.11, 2.11.3, 4.2, 4.5.2, 4.5.5, 5.3.1, 5.3.4–5.3.5, 5.11.1, 5.13–5.13.2, A4–A6, D3
Lettering 1.2
Limits and Fits B6
Linear Units 1.1.1, 1.5–1.5.1, 1.5.3
  Customary Linear Units 1.5.2–1.5.3

M

Mathematically Defined Surface 4.5.10
Maximum Material Condition 1.3.1–1.3.2, 1.3.20, 1.3.23, 1.3.37, 2.7.1–2.8, 2.8.2–2.8.5, 2.11, 2.11.3, 4.2, 4.5.2, 4.5.4, 4.5.6, 4.5.8, 5.2, 5.3.1–5.3.6, 5.4.1, 5.10.1, 5.11.1–5.11.2, 5.13–5.13.2, 6.4.1, 6.5.5, 6.6.1, A4–A8, D3
Median 2.8, 2.8.2, 2.8.4, 5.12.1, 5.14, 6.4.1, 6.6.2–6.6.4, A3–A4, A7–A8
Metric Linear Units 1.5.1
Modifying Symbols 3.3.5

N

Notes 1.1.4, 1.3.9, 1.7, 1.7.5, 2.1.1, 2.4.1, 3.1, 3.3.5–3.3.6, 3.3.8, 5.7, 6.8.1

P

Parallelism 2.7.3, 6.2, 6.5.5, 6.6, 6.6.1, 6.6.3, 6.7.1
Perpendicularity 2.7.3, 4.5.6, 5.4.1, 5.5–5.5.1, 5.9, 5.9.2, 6.2, 6.6–6.6.1, 6.6.4, 6.7.1
PLTZF 5.4
Plane
  Center 5.10.1
  Tangent 1.3.21, 6.6.1
Point 1.3.3, 1.3.6–1.3.7, 1.6.1–1.6.2, 1.7.2, 1.9.4, 2.3.1–2.3.2, 3.3.3, 3.3.11, 4.4.1, 4.6.1, 5.11.3, A10
Positional Tolerancing
  Formulas B3, B4, B6, B7
Profile 1.3.9, 1.3.33, 1.4, 1.7.3, 2.1.1, 2.13, 4.5.10, 4.6.3, 6.2, 6.3.1, 6.4.1, 6.5–6.6.1, 6.7.1, A4, A8, E2, E5
Projected Tolerance Zone 3.4.6

R

Radius 2.15
Regardless of Feature Size ... 1.3.22, 2.8–2.8.1, 4.5.2–4.5.4, 4.5.6, 4.6.4–4.6.5, 5.3.1, 5.3.4–5.3.6, 5.11.1, 5.12.1, 5.13–5.13.1, 5.13.3–5.14, 6.4.1, A2, A4–A8, A11, D3
Restraining 6.8, 6.8.2
Resultant Condition 1.3.23, 2.11.2
Runout 1.3.33, 2.1.1, 2.8, 5.11, 5.11.2, 6.1, 6.3.1, 6.5.5, 6.7–6.7.1, 6.8.2, A3–A4, A7–A8, E2, E5

S

Screw Threads 1.2, 1.8.19, 4.5.9, A3
Size
  Actual 1.3.24
  Actual Local 1.3.25
  Actual Mating 1.3.26
  Limits of 1.3.27
  Nominal 1.3.28
  Resultant Condition 1.3.29
  Virtual Condition 1.3.30
Statistical Tolerance 2.16
Straightness 2.7.1, 4.5.4, 6.2, 6.4–6.4.1, 6.4.4, 6.7.1, A4, A8
Symbols
  All Around Symbol 3.3.18
  Arc Length Symbol 3.3.9
  Basic Dimension Symbol 3.3.4
  Between Symbol 3.3.11
  Counterbore or Spotface Symbol 3.3.12
  Countersink Symbol 3.3.13
  Datum Feature Symbol 3.3.2, 3.4.6
  Datum Target Symbol 3.3.3
  Depth Symbol 3.3.14
  Diameter and Radius Symbols 3.3.7
  Dimension Origin Symbol 3.3.16
  Free State Symbol 3.3.19
  Geometric Characteristic Symbols 3.3.1
  Material Condition Symbols 3.3.5
  Projected Tolerance Zone Symbol 3.3.6
  Reference Symbol 3.3.8
  Square Symbol 3.3.15
  Statistical Tolerancing Symbol 3.3.10
  Surface Texture Symbols 1.2, 3.3.21
  Symbol Construction 3.1
  Symbols for Limits and Fits 3.3.22
  Tangent Plane Symbol 3.3.20
  Taper and Slope Symbols 3.3.17
Symmetrical Outlines 1.8.8

Copyright ASME International
Provided by IHS under license with ASME
No reproduction or networking permitted without license from IHS
Not for Resale

T

Taper 1.2, 2.13–2.14, 3.3.17, 6.4.4, 6.7.1, A3
Tolerance
  Accumulation 2.6
  Application 2.1.1
  Bilateral 1.3.32
  Geometric 1.3.33
  Unilateral 1.3.34
  Tolerancing, Implied 90° Angle 2.1.1
Tolerances of Location
  Bidirectional Positional Tolerancing of Features
    Polar Coordinate Method 5.9.2
    Rectangular Coordinate Method 5.9.1
  Coaxiality Controls 5.12.2, A7
    Concentricity Tolerancing 5.12.1
    Positional Tolerance Control 5.11.1
    Runout Tolerance Control 5.11.2
  Feature Pattern Location
    Composite Positional Tolerancing 5.4.1
    Feature-Relating Tolerance Zone Framework
      (FRTZF) 5.4–5.4.1, 5.11.1, A7
    Pattern-Locating Tolerance Zone Framework
      (PLTZF) 5.4–5.4.1, 5.11.1, A7
  Noncircular Features At MMC 5.10.1
  Positional Tolerancing 2.1.1, 5.13.3, A7
    Application to Base Line and
      Chain Dimensioning 5.2.2
    Basic Dimensions 5.2.1, 5.3.6
    Calculating Positional Tolerance 5.3.2
    General Tolerances 5.2.1
    Identifying Features to Establish Datums 5.2.1
    LMC as Related to Positional Tolerancing 5.3.5
    Material Condition Basis 5.3.1
    MMC as Related to Positional Tolerancing 5.3.2
    RFS as Related to Positional Tolerancing 5.3.4
    Simultaneous Requirement — MMC 5.3.6
    Simultaneous Requirement — RFS 5.3.6
    Use of Feature Control Frame 5.2.1
    Zero Positional Tolerance at MMC ... 2.8.3, 5.3.3, 6.6.1
    Zero Tolerance at LMC 2.8.5
  Positional Tolerancing for Symmetrical Relationships
    Positional Tolerancing at MMC
      for Assemblability 5.12.1
    Positional Tolerancing RFS for Assemblability ... 5.12.3
    Zero Positional Tolerancing at MMC for Symmetrical
      Relationships 5.12.2
  Projected Tolerance Zone 3.4.6
  True Position 1.3.3

U

Units 1.1.2, 1.3.8, 1.5–1.5.3, 1.6.4, 1.7.1, 6.4.1–6.4.2

V

Virtual Condition 1.3.36, 2.11.1, 2.11.3

Copyright ASME International
Provided by IHS under license with ASME
No reproduction or networking permitted without license from IHS
Not for Resale

RELATED DOCUMENTS

Abbreviations Y1.1-1989
American National Standard Drafting Practices
- Metric Drawing Sheet Size and Format Y14.1M-1992
- Line Conventions and Lettering Y14.2M-1992
- Multiview and Sectional View Drawings Y14.3M-1994
- Pictorial Drawing ..... Y14.4M-1989(R1994)
- Dimensioning and Tolerancing Y14.5M-1994
- Mathematical Definition of Dimensioning and Tolerancing Principles Y14.5.1M-1994
- Screw Threads ..... Y14.6-1978(R1993)
- Screw Threads (Metric Supplement) ..... Y14.6aM-1981(R1993)
- Gears and Splines
  - Spur, Helical, and Racks ..... Y14.7.1-1971(R1993)
  - Bevel and Hypoid ..... Y14.7.2-1978(R1994)
- Castings and Forgings Y14.8M-1989
- Springs ..... Y14.13M-1981(R1987)
- Electrical and Electronics Diagrams ..... Y14.15-1966(R1988)
- Interconnection Diagrams Y14.15a-1971
- Information Sheet Y14.15b-1973
- Fluid Power Diagrams ..... Y14.17-1966(R1987)
- Optical Parts ..... Y14.18M-1986(R1993)
- Types and Applications of Engineering Drawings Y14.24M-1989
- Chassis Frames — Passenger Car and Light Truck — Ground Vehicle Practices Y14.32.1M-1994
- Parts Lists, Data Lists, and Index Lists Y14.34M-1989
- Revision of Engineering Drawings and Associated Documents Y14.35M-1992
- Surface Texture Symbols ..... Y14.36-1978(R1993)

Digital Representation for Communication of Product Definition Data Y14.26M-1987
A Structural Language Format for Basic Shape Description ..... Y14 Technical Report 4-1989
Graphic Symbols for:
- Electrical and Electronics Diagrams Y32.2-1975
- Plumbing ..... Y32.4-1977(R1987)
- Use on Railroad Maps and Profiles ..... Y32.7-1972(R1987)
- Fluid Power Diagrams ..... Y32.10-1967(R1987)
- Process Flow Diagrams in Petroleum and Chemical Industries ..... Y32.11-1961(R1985)
- Mechanical and Acoustical Elements as Used in Schematic Diagrams ..... Y32.18-1972(R1985)
- Pipe Fittings, Valves, and Piping ..... Y32.2.3-1949(R1988)
- Heating, Ventilating, and Air Conditioning ..... Y32.2.4-1949(R1984)
- Heat Power Apparatus ..... Y32.2.6-1950(R1984)

The ASME Publications Catalog shows a complete list of all the Standards published by the Society. For a complimentary catalog, or the latest information about our publications, call 1-800-THE-ASME (1-800-843-2763).

--`,,,`,,,-`-`,,`,,`,`,,`---

Copyright ASME International
Provided by IHS under license with ASME
No reproduction or networking permitted without license from IHS

Not for Resale

Copyright ASME International
Provided by IHS under license with ASME
No reproduction or networking permitted without license from IHS
Not for Resale

--`,,,`,,-`-`,,`,,`,`,,`---

Copyright ASME International
Provided by IHS under license with ASME
No reproduction or networking permitted without license from IHS
Not for Resale

Copyright ASME International
Provided by IHS under license with ASME
No reproduction or networking permitted without license from IHS
Not for Resale

ISBN #0-7918-2223-0



Copyright ASME International
Provided by IHS under license with ASME
No reproduction or networking permitted without license from IHS

Not for Resale