Engineering Drawing and Related Documentation Practices

ASME Y14.41-2003

DIGITAL PRODUCT DEFINITION DATA PRACTICES

An American National Standard

The American Society of Mechanical Engineers

Copyright ASME International
Provided by IHS under license with ASME
No reproduction or networking permitted without license from IHS

Not for Resale

ADOPTION NOTICE

ASME Y14.41, Digital Product Definition Data Practices, was adopted on 7 July 2003 for use by the Department of Defense, (DoD). Proposed changes by DoD activities must be submitted to the DoD Adopting Activity: Commander, U.S. Army TACOM-ARDEC, ATTN: AMSTA-AR-QAW-E, Picatinny Arsenal, NJ 07806-5000. Copies of this document may be purchased from The American Society of Mechanical Engineers (ASME), 22 Law Drive, PO Box 2900, Fairfield, NJ 07007-2900; http://www.asme.org.

Custodians:
Army — AR
Navy — SA
Air Force — 16
DLA — DH

Adopting Activity:
Army — AR

Review Activities:
Army — AT, AV, CE, CR, EA, GL, MI, SM, TE
Navy — AS, CH, EC, MC, OS, SH, TD, YD
Air Force — 11, 13, 19, 68, 70, 71, 84, 99
DLA — CC, IS
NSA — NS

AMSC N/A

AREA DRPR

DISTRIBUTION STATEMENT A. Approved for public release; distribution is unlimited.

--`,`-`-`,,`,,`,`,,`---

Copyright ASME International
Provided by IHS under license with ASME
No reproduction or networking permitted without license from IHS

Not for Resale

The American Society of Mechanical Engineers

AN AMERICAN NATIONAL STANDARD

DIGITAL PRODUCT DEFINITION DATA PRACTICES

ASME Y14.41-2003

--`,,`-`-`,,`,,`,`,,`---

Copyright ASME International
Provided by IHS under license with ASME
No reproduction or networking permitted without license from IHS

Not for Resale

Date of Issuance: August 15, 2003

The next edition of this Standard is scheduled for publication in 2007. There will be no addenda or written interpretations of the requirements of this Standard issued to this edition.

ASME is the registered trademark of The American Society of Mechanical Engineers.

This code or standard was developed under procedures accredited as meeting the criteria for American National Standards. The Standards Committee that approved the code or standard was balanced to assure that individuals from competent and concerned interests have had an opportunity to participate. The proposed code or standard was made available for public review and comment that provides an opportunity for additional public input from industry, academia, regulatory agencies, and the public-at-large.

ASME does not "approve," "rate," or "endorse" any item, construction, proprietary device, or activity.

ASME does not take any position with respect to the validity of any patent rights asserted in connection with any items mentioned in this document, and does not undertake to insure anyone utilizing a standard against liability for infringement of any applicable letters patent, nor assumes any such liability. Users of a code or standard are expressly advised that determination of the validity of any such patent rights, and the risk of infringement of such rights, is entirely their own responsibility.

Participation by federal agency representative(s) or person(s) affiliated with industry is not to be interpreted as government or industry endorsement of this code or standard.

ASME accepts responsibility for only those interpretations of this document issued in accordance with the established ASME procedures and policies, which precludes the issuance of interpretations by individuals.

No part of this document may be reproduced in any form,
in an electronic retrieval system or otherwise,
without the prior written permission of the publisher.

The American Society of Mechanical Engineers
Three Park Avenue, New York, NY 10016-5990

Copyright © 2003 by
THE AMERICAN SOCIETY OF MECHANICAL ENGINEERS
All rights reserved
Printed in U.S.A.

Copyright ASME International
Provided by IHS under license with ASME
No reproduction or networking permitted without license from IHS
Not for Resale

CONTENTS

Foreword vi
Committee Roster vii

1 General 1
1.1 Scope 1
1.2 Structure of Standard 1
1.3 Figures 1
1.4 Reference to This Standard 1
1.5 Units 1
1.6 Text in Figures 1
1.7 Symbols 1
1.8 References 1
1.9 Definitions and Terminology 2

2 Data Set Identification and Control 2
2.1 General 2
2.2 Related Data 4
2.3 Data Management 4

3 Data Set Requirements 4
3.1 General 4
3.2 General Model Requirements 5
3.3 General Method Requirements 7
3.4 Management Data 7
3.5 Security Marking 7
3.6 Views on Models 9

4 Design Model Requirements 10
4.1 General 10

5 Common Requirements for Product Definition Data 11
5.1 Common Requirements 11
5.2 Model Requirements 11
5.3 Drawing Requirements 16

6 Notes and Special Notations 26
6.1 Common Requirements 26
6.2 Model Requirements 26
6.3 Drawing Requirements 27

7 Model Values and Dimensions 27
7.1 Common Requirements 27
7.2 Model Requirements 28
7.3 Drawing Requirements 29

8 Plus and Minus Tolerances 30
8.1 Common Requirements 30
8.2 Model Requirements 30
8.3 Drawing Requirements 30

--`-`-`,,`,,`,`,,`---

Copyright ASME International
Provided by IHS under license with ASME
No reproduction or networking permitted without license from IHS
Not for Resale

9 Datum Applications 30
9.1 Common Requirements 30
9.2 Model Requirements 30
9.3 Drawing Requirements 36

10 Geometric Tolerances 39
10.1 Common Requirements 39
10.2 Model Requirements 39
10.3 Drawing Requirements 49

Figures

2-1 Contents of a Product Definition Data Set 3
2-2 Contents of a Model 4
3-1 Left-Hand and Right-Hand Model Coordinate Systems 6
3-2 Design Model Cutting Plane 8
3-3 Design Model With Offset Section 10
5-1 Display Management 12
5-2 Annotation and Model Geometry Relationship 14
5-3 Tolerance Query Associativity 15
5-4 Simplified Feature Representation and Attributes 17
5-5 Annotation Planes Relative to Model Geometry 18
5-6 Graphic Display of Associated Annotation 19
5-7 Listing of Digital Element Identifiers 20
5-8 Queries for Datum Feature Symbols and Datum Target Symbols 20
5-9 Queries for Datum Targets 21
5-10 Queries for Coordinates and Supplemental Geometry 22
5-11 Annotated Model 23
5-12 Design Model and Drawing 24
5-13 Axonometric Views 25
7-1 Placement and Attachment of Basic Dimensions 28
7-2 Placement and Attachment of Size Dimensions 29
8-1 Attachment Techniques: Fillets, Rounds, and Chamfers 31
8-2 Attachment Techniques: Reliefs and Step Surfaces 32
8-3 Attachment Techniques: Countersinks and Oblique Surfaces 33
8-4 Attachment Techniques: Depth, Spotface, Remaining Thickness 34
8-5 Attachment Techniques: Notches, Flats, and PIN Heights 35
9-1 Datum System and Coordinates Relationship 36
9-2 Datum Feature Symbol Attachments 38
9-3 Partial Surface as a Datum Feature 39
9-4 Datum Targets and Symbols Attachment 40
9-5 Equalizing Target Points Establish a Datum Axis on an Internal Cylindrical Surface 41
9-6 Two Cylindrical Features Establish a Datum Axis 42
9-7 Pattern of Features Establish a Datum Axis 43
9-8 Two Coaxial Features Establish a Datum Axis 44
9-9 Co-Planar Surfaces Establish a Datum Plane 45
9-10 Separated Surfaces Establish a Datum Plane 46
9-11 Datum Targets and Symbols in an Axonometric View 48
10-1 General Application of Geometric Tolerances –Coincident or Perpendicular Annotation Plane 50
10-2 Circularity –Sphere, Cylinder, Conical, or Revolved 52
10-3 Cylindricity 54
10-4 Straightness –Directed by Line Element 55
10-5 Straightness –Directed by Ordinate Axis 57
10-6 Straightness –Cylindrical or Conical Surface 58
10-7 Straightness –Median Line or Median Plane 58
10-8 Orientation –Planar Surfaces 59

Copyright ASME International
Provided by IHS under license with ASME
No reproduction or networking permitted without license from IHS
Not for Resale

10-9 Each Element Orientation – Directed by Line Element 60
10-10 Each Element Orientation – Directed by Ordinate Axis 61
10-11 Orientation – Inclined Surface 62
10-12 Orientation – Cylinder or a Set of Opposed Parallel Surfaces 63
10-13 Orientation of an Axis With a Parallel Planes Tolerance Zone 64
10-14 Profile – Planar, Conical, or Revolved Surface 65
10-15 Profile – Mulitple or Co-Planar Surfaces 66
10-16 Profile – Between Basis 67
10-17 Profile – All-Around Application 68
10-18 Profile – Unilaterally Disposed 69
10-19 Profile – Unequally Disposed 70
10-20 Line Profile – Directed By Line Element 71
10-21 Line Profile – Directed By Ordinate Axis 72
10-22 Position – Individual Patterns of Features 73
10-23 Position – Projected Tolerance Zones 74
10-24 Position – Extremities of Long Holes 75
10-25 Position – Elongated Holes (Slots) 76
10-26 Bi-directional Position – Polar or Rectangular 77
10-27 Position – Combined with Profile 78
10-28 Concentricity and Symmetry 79
10-29 Runout – Attachments and Associativity 80
10-30 Runout – Perpendicular and Cylindrical Surfaces 81
10-31 Runout – Spherical, Conical, and Revolved Surfaces 82
10-32 Axonometric Views – Feature Control Frames 83
10-33 Axonometric Views – Limited Area Application 84
10-34 Axonometric Views – Straightness, Each Element Applications 85
10-35 Axonometric Views – Parallel Planes Tolerance Zone 86
10-36 Axonometric Views – Multiple Surfaces 87
10-37 Axonometric Views – Between Basis 88
10-38 Axonometric Views – Profile Unilaterally Disposed 89
10-39 Axonometric Views – Profile Unequally Disposed 90

Tables

7-1 Resolved Dimension Examples 27
8-1 Plus and Minus Tolerance Applications 30
10-1 Form Tolerances 49
10-2 Orientation Tolerances 51
10-3 Profile Tolerances 53
10-4 Location Tolerances 53
10-5 Runout Tolerances 56

Mandatory Appendix

I Symbols 91

Copyright ASME International
Provided by IHS under license with ASME
No reproduction or networking permitted without license from IHS
Not for Resale

FOREWORD

The development of this Standard was initiated at the request of industry and the government. A meeting was held to determine the interest in this subject in January 1997 in Wichita, Kansas, hosted by The Boeing Company in their facility. A subsequent meeting was held during the spring ASME meeting in 1997 to enlist membership of those who would be interested in working this project.

This Standard was largely built using the e-mail systems now available to industry and government. This was actually a revolutionary happening, since in some part, the subcommittee was establishing ground rules for the use of 3D data in new design systems that were not fully tested or fully developed. The subcommittee understands a need for documented systems and systematic work. The evolution of the tools available to those that create and produce drawings has enhanced the capabilities of designers in producing complex hardware. The computer and the computer graphics design software is at a stage where using the design package to extend the normal drawing usage to a new level is a real possibility. Those who have chosen to spend the time and effort in the definition of the product shall see a return on their investments associated with implementing three-dimensional drawing packages. The accuracy of the product design is unparalleled, and provides the users of the design data the ability to interrogate the digital data that controls the design. Companies were clamoring for guidelines on how to use these innovative techniques. There were many issues in using the 3D data for the manufacture and inspection of the product. This is indeed a first, since digital data was usable in the manufacturing of the product but was widely disapproved for inspection. The intent of this Standard is to set forth a logical and manageable system in the use of the new design systems available to manufacturers both large and small. This advancement is a change in media used in the design, manufacture, and inspection cycles of the product.

Suggestions for improvement of this Standard are welcomed. They should be sent to The American Society of Mechanical Engineers, Attention: Secretary, Y14 Main Committee, Three Park Avenue, New York, NY 10016.

This Standard was approved as an American National Standard on July 7, 2003.

Copyright ASME International
Provided by IHS under license with ASME
No reproduction or networking permitted without license from IHS
Not for Resale

ASME STANDARDS COMMITTEE
Y14 Engineering Drawing and Related Documentation Practices

(The following is the roster of the Committee at the time of approval of this Standard.)

OFFICERS

F. Bakos, *Chair*
K. E. Wiegandt, *Vice Chair*
C. J. Gomez, *Secretary*

COMMITTEE PERSONNEL

A. R. Anderson, Dimensional Control System, Inc.
F. Bakos, Consultant
J. V. Burleigh, The Boeing Co.
R. A. Chadderdon, Southwest Consultants
M. E. Curtis, Jr., Rexnord Industries, Inc.
D. E. Day, Monroe Community College
C. W. Ferguson, WM Education Services
L. W. Foster, L. W. Foster Associates, Inc.
C. J. Gomez, The American Society of Mechanical Engineers
B. A. Harding, Purdue University
K. S. King, Naval Surface Warfare Center, Dahlgren Division
A. Krulikowski, General Motors Corp.
H. S. Lachut, ABB Combustion Engineering, Inc.
J. G. Liska, Aerojet Propulsion, Division of Gencorp
P. J. McCuistion, Ohio University
P. E. McKim, Caterpillar, Inc.
E. Niemiec, MTD Products, Inc.
R. L. Nieukirk, *Alternate*, Caterpillar, Inc.
G. H. Whitmire, Gary Whitmire Associates
K. E. Wiegandt, Sandia National Laboratory
B. A. Wilson, The Boeing Co.
P. Wreede, Hutchinson Technology, Inc.

SUBCOMMITTEE 41 — DIGITAL MODELING

A. Krulikowski, *Chair*, General Motors Corp.
N. Smith, *Vice Chair*, The Boeing Co.
B. Dinardo, *Secretary,* U.S. Department of the Army, TACOM-ARDEC
D. M. Braun, Rockwell Collins, Inc.
J. L. Cerio, Raytheon Co.
C. Cubeles, Dassault-Systems
D. D. Cunningham, Jr., Thiokol Propulsion
P. E. Damron, The Boeing Co.
K. Dobert, EDS PLM Solutions
D. L. Ellis, General Dynamics Land Systems
L. Holmes, Raytheon Co.
L. F. Irwin, SDRC
J. I. Miles, Lockheed Martin Aeronautics Co.
T. J. Miller, Ford Motor Co.
M. A. Murphy, General Motors Corp.
G. R. Mussell, CNH Global NV
R. L. Nieukirk, Caterpillar, Inc.

Copyright ASME International
Provided by IHS under license with ASME
No reproduction or networking permitted without license from IHS
Not for Resale

A. F. Pettenger, DEPCO, Inc.
J. M. Simmons, Rolls-Royce Corp.
J. M. Smith, Caterpillar, Inc.
E. A. Spinelli, Raytheon Co.
T. T. Taylor, Siemens Power Generation
F. A. Tolmie, Rockwell Collins, Inc.
J. C. Weers, The Boeing Co.

Y14/SC 41 SUPPORT GROUP

J. F. Bradshaw, The Boeing Co.
J. V. Burleigh, The Boeing Co.
B. A. Dahl, The Boeing Co.
B. Davis, Ford Motor Co.
B. A. Harding, Purdue University
G. A. Hetland, Hutchinson Technology, Inc.
L. R. Lange, Consultant
C. A. Wearring, EDS PLM Solutions
D. Welever, The Boeing Co.

Copyright ASME International
Provided by IHS under license with ASME
No reproduction or networking permitted without license from IHS
Not for Resale

DIGITAL PRODUCT DEFINITION DATA PRACTICES

1 GENERAL

1.1 Scope

This Standard establishes requirements and references documents applicable to the preparation and revision of digital product definition data, hereafter referred to as data sets. This Standard defines exceptions and additional requirements to existing ASME standards for using product definition digital data sets or drawings in digital format. Where no exception or additional requirements are stated, existing ASME standards shall apply.

1.2 Structure of Standard

This Standard supports two methods of application: model only, and model and drawing in digital format. The structure starts with the requirements common to both methods, and then branches to the other sections that have differing requirements for each method. In addition, it provides a guide for the many CAD software packages to develop better modeling and annotation practices for computer aided design and engineering disciplines.

1.3 Figures

The figures in this Standard are intended only as illustrations to aid the user in understanding the practices described in the text. In some cases, figures show a level of detail as needed for emphasis; in other cases, figures are only complete enough to illustrate a concept or facet thereof. The absence of figures has no bearing on the applicability of the specified requirement or practice. To comply with the requirements of this Standard, actual data sets shall meet the content requirements set forth in the text.

To assist the users of this Standard, a listing of the paragraph(s) that refer to an illustration appears in the lower right-hand corner of each figure. This listing may not be all-inclusive. The absence of the listing is not a reason to assume inapplicability.

Most figures are illustrations of models in a three-dimensional environment. Figures illustrating drawings in digital format have a border included.

1.4 Reference to This Standard

When data sets are based on this Standard, this fact shall be noted in the data set or in a document referenced by the data set. References to this Standard shall state ASME Y14.41-2003.

1.5 Units

The International System of Units (SI) is featured in this Standard. United States (U.S.) customary units could equally well have been used without prejudice to the principles established.

1.6 Text In Figures

Text in upper case letters used in the figures is intended to appear in data sets. Text in lower case letters is explanatory of the figures only and is not intended to appear in data sets.

1.7 Symbols

The use of symbols to indicate dimensional requirements does not preclude the use of equivalent terms or abbreviations in accordance with ASME Y14.38 where symbology is considered inappropriate.

1.8 References

ASME Y14.1-1995 (R2002), Decimal Inch Drawing Sheet Size and Format

ASME Y14.1M-1995 (R2002), Metric Drawing Sheet Size and Format

ASME Y14.2M-1992 (R1998), Line Conventions and Lettering

ASME Y14.3M-1994 (R1999), Multiview and Sectional View Drawings

ASME Y14.4M-1989 (R1999), Pictorial Drawing

ASME Y14.5M-1994 (R1999), Dimensioning and Tolerancing

ASME Y14.8M-1996 (R2002), Castings and Forgings

ASME Y14.35M-1997, Revision of Engineering Drawings and Associated Documents

ASME Y14.38-1999, Abbreviations and Acronyms

ASME Y14.100-2000, Engineering Drawing Practices

Publisher: The American Society of Mechanical Engineers (ASME International), Three Park Avenue, New York, NY 10016-5990; Order Department: 22 Law Drive, Box 2300, Fairfield, NJ 07007-2300

IEEE/ASTM SI 10, Standard for Use of the International System of Units (SI): The Modern Metric System

Publisher: Institute of Electrical and Electronics Engineers (IEEE), 445 Hoes Lane, Piscataway, NJ 08854-1331

Publisher: The American Society for Testing and Materials (ASTM), 100 Barr Harbor Drive, West Conshohocken, PA 19428-2959

Copyright ASME International
Provided by IHS under license with ASME
No reproduction or networking permitted without license from IHS
Not for Resale

1.9 Definitions and Terminology

1.9.1 Definitions

annotation: dimensions, tolerances, notes, text, or symbols visible without any manual or external manipulation.

annotation plane: a conceptual plane containing annotation that either perpendicularly intersects, or is coincident with one or more surfaces of a feature.

assembly model: a model in which the product described is an assembly of two or more items.

associated entities: the portion of a product definition to which annotation pertains.

associated group: a user-defined set of related digital elements.

associativity: the established relationship between digital elements.

attribute: a dimension, tolerance, note, text, or symbol required to complete the product definition or feature of the product that is not visible but available upon interrogating the model.

data: information represented in a formal manner suitable for communication, interpretation, or processing by human beings or computers.

datum system: a partial or complete datum reference frame.

derivative: data duplicated or extracted from the original. A copy of a derivative is also a derivative.

design model: the portion of the data set that contains model and supplemental geometry.

digital element: geometric element, feature, group of features, annotation, associated group, or attribute that exists in a data set.

digital element identifier: a label or name used to specify a unique digital element.

direction dependent tolerance: a tolerance that invokes a zone of parallel lines or curves.

geometric element: a graphic entity used in a data set. For example, point, line, plane, surface, solid, model coordinate system, or crosshatching.

hard copy: a printed or plotted copy of a displayed image on a medium such as paper or polyester film.

installation model: a model in which the product described is an installation, showing parts or assemblies and a partial or complete representation of the installation site.

management data: the data required for the release, control, and storage of product definition data as well as other relevant engineering data.

model: a combination of design model, annotation and attributes that describes a product.

model coordinate system: a representation of a Cartesian coordinate system in a product definition data set.

model geometry: geometric elements in product definition data which represent designed product.

model value: the numerical value derived by interrogating the model that quantifies the form and spatial relationships of the geometry composing a design model or assembly of models to the precision (number of decimal places) of the computer system.

product definition data: data elements required to completely define a product.

product definition data set: a collection of one or more computer file(s) that discloses (directly or by reference), by means of graphic or textual presentations, or combinations of both, the physical and functional requirements of an item.

query: a means of interrogating a digital element or the relationship between digital elements.

represented line element: A supplemental geometry line or curve segment indicating the orientation of a direction dependent tolerance.

resolved dimension: a model value that is rounded off to the number of decimal places required for the design.

saved view: a stored and retrievable specific orientation and a magnification factor of a model.

special character: a character not included in the set of letters A-Z, a-z, numerals, and punctuation symbols.

supplemental geometry: geometric elements included in product definition data to communicate design requirements but not intended to represent a portion of the manufactured product.

1.9.2 Terminology. When the term "feature" is used in this Standard in reference to a model or drawing, it is referring to the digital representation of the feature. This differs from its use in ASME Y14.5M where it applies to a physical portion of a part, such as a surface, pin tab, hole, or slot.

2 DATA SET IDENTIFICATION AND CONTROL

This Section establishes requirements for a data set identification system.

2.1 General

The current revision of the data and the computer application(s) and version(s) used to develop the data set shall be specified with other management data. See para. 3.4.

2.1.1 Data Set Identifier. The data set identifier shall be unique and consist of numeric, alpha or special characters in any combination. Spaces are not permitted between any of the characters of the data set identifier.

Copyright ASME International
Provided by IHS under license with ASME
No reproduction or networking permitted without license from IHS
Not for Resale

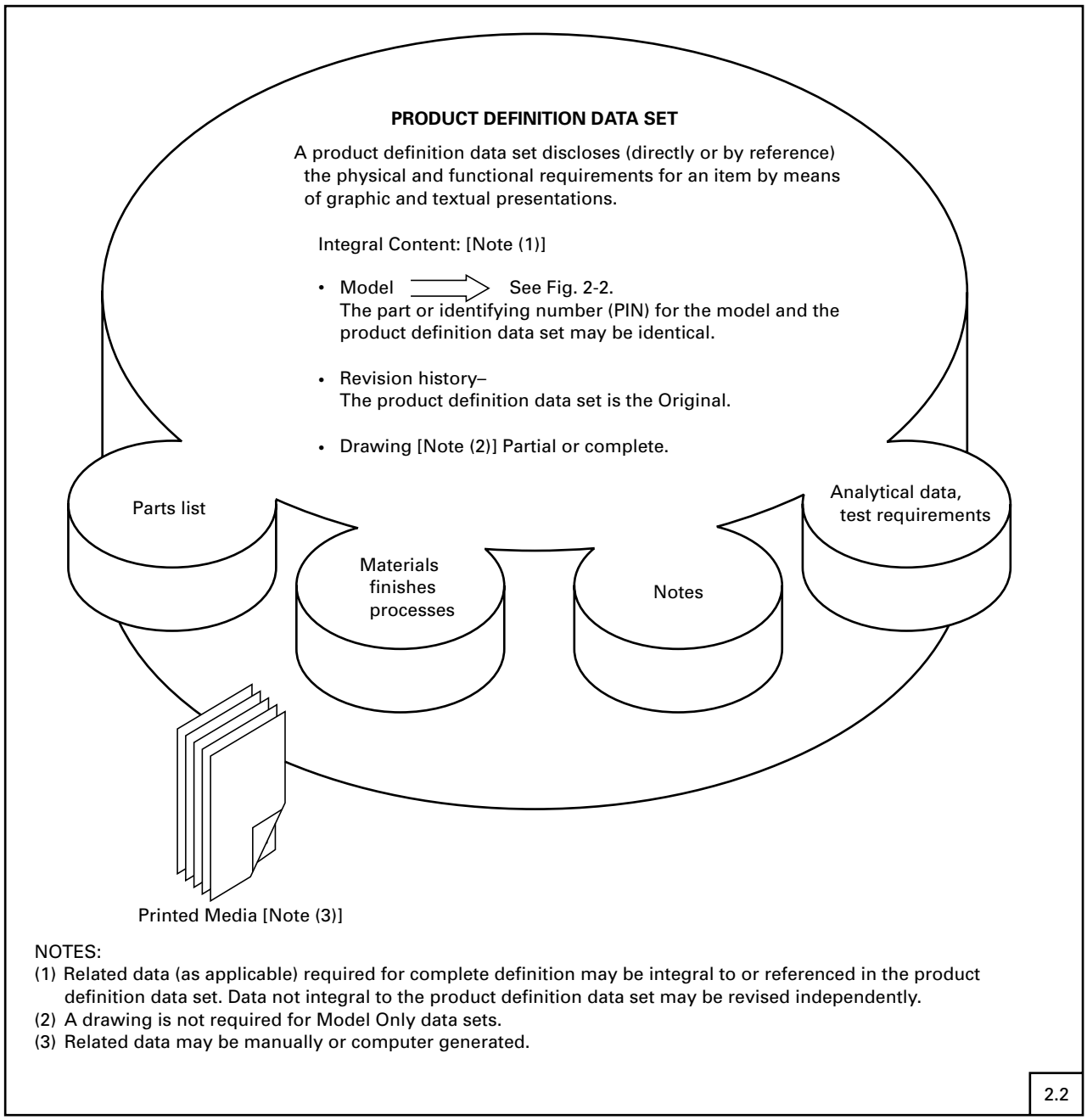

Fig. 2-1 Contents of a Product Definition Data Set

(a) Data Set Identifier Length. The length of the data set identifier may be a direct function of the computer system and the operating system. When the Part or Identifying Number (PIN) is used as the data set identifier, the length shall be compatible with recognized limitations on PIN number length in accordance with ASME Y14.100M.

(b) Special Characters. Special characters shall be selected in a manner that does not hinder data set identification or have an adverse affect on the computer system operation such as dash (-), slash (/), or asterisk (*).

(c) Identifier Prefixes and Suffixes. A recognizable prefix or suffix may be included as part of the identifier to associate files and sets of related data.

Copyright ASME International
Provided by IHS under license with ASME
No reproduction or networking permitted without license from IHS Not for Resale

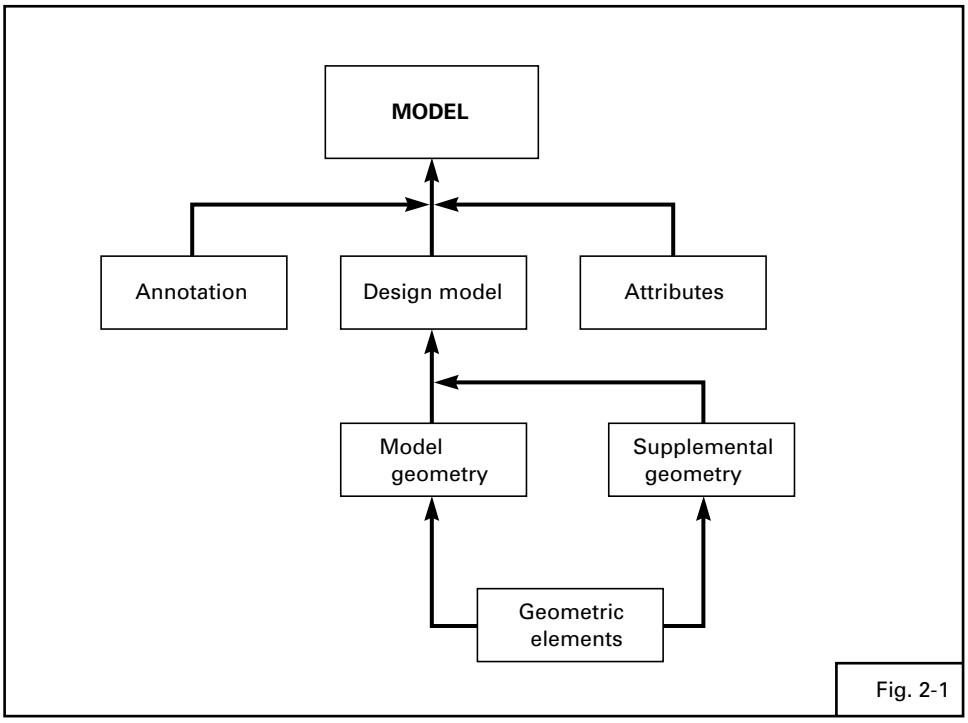

Fig. 2-2 Contents of a Model

2.1.2 Drawing Identification. See ASME Y14.100 for the description and use of Drawings and Drawing numbers.

2.1.3 Part or Identifying Number. See ASME Y14.100 for the description and use of PIN.

2.2 Related Data

Related data shall be integral to or referenced in the data set. Related data consists of, but is not limited to the following: analytical data, parts lists, test requirements, material specifications, process and finish requirements in accordance with Fig. 2-1.

2.3 Data Management

The following paragraphs describe the structure and control requirements for data management.

2.3.1 Management System. A data management system shall provide control and tracking information of the data sets. This system may include work in process, data review status, model checked status, release status, design tool and version, libraries, etc.

2.3.2 Approval. The Data Set shall be approved in accordance with ASME Y14.100.

2.3.3 Storage and Retention. Data sets shall be controlled and available throughout the life cycle of a product.

2.3.4 Revision History. Revision history information, in accordance with ASME Y14.35M, shall be contained in the data set.

3 DATA SET REQUIREMENTS

This Section establishes the requirements for a data set.

3.1 General

The data set shall provide complete product definition. For example, a design model, its annotation, and supporting documentation.

3.1.1 Fundamental Dimensioning and Tolerancing Requirements. The following describe the fundamental dimensioning and tolerancing requirements that are applicable to both annotated models and drawings, that are specific to annotated models, and that are specific to drawings.

(a) Common to Annotated Models and Drawings

(1) All model values and resolved dimensions shall be obtained from the model.

(2) The ability to query the model shall be available. See para. 5.2.7.

(3) There is no implied 90 deg basic angle rule, as defined in ASME Y14.5M, for a model. All angular values shall be queried from the model. See para. 7.2.1. Exceptions to this are the model coordinate system(s)

Copyright ASME International
Provided by IHS under license with ASME
No reproduction or networking permitted without license from IHS
Not for Resale

and planes associated with a datum reference frame(s) and orthographic views.

(4) Direct tolerancing methods, as defined in ASME Y14.5M, should only be used to define the size of a feature. Geometric tolerancing is the preferred method.

(5) When query is required, a notation stating the requirement for query of the model or associated data shall be added to the drawing or in the general notes.

(6) Rounding requirements for resolved dimensions shall comply with para. 7.1.1(c).

(7) When tolerancing features, alignment of the annotation plane to the true profile is not required.

(8) Values queried from the model for any feature(s) without any tolerance or datum target specifications assigned shall be reference dimensions.

(9) Legibility requirements of ASME Y14.2M shall apply when the annotation is viewed perpendicular to the annotation plane.

(10) Annotation in any given annotation plane shall not overlap other annotation in the same annotation plane when the model is viewed perpendicular to the annotation plane.

(11) Annotation text within any given annotation plane shall not be placed over the design model when the model is viewed perpendicular to the annotation plane.

(12) Visible gaps between extension (projection) lines and geometry, as defined in ASME Y14.5M, are not required on models.

(b) Applicable to Models Only

(1) All annotation shall be specified in one or more annotation planes. When a CAD software does not support maintenance of annotation plane orientation relative to the model, the model only method shall not be used. See para. 5.2.3.

(2) The associated entities, annotation, and attributes shall be in agreement. See para. 5.2.1.

(3) Resolved dimensions created from queried model values are considered the same as values specified in ASME Y14.5M as expressed dimensions. See Table 7-1.

(4) The term TRUE, when used with a dimension, shall not be used on models.

(5) Display of centerlines or center planes for features of size are optional.

(6) To ensure the annotation is being interpreted as intended (for example the text could be upside down or backwards following rotation of the model) one of the following techniques shall be used:

(a) Ensure the reading direction is updated after rotation of a model.

(b) Include a means of determining the correct reading direction in each annotation plane applied to a model.

(c) When using saved views, ensure the model is orientated in the intended view direction. For example, this may be accomplished by including a means of determining the correct reading direction in the view.

(7) Dimensions and tolerances may be shown to internal features without the use of a section. See Fig. 8-4(c).

(c) Applicable to Drawings Only

(1) Dimensions, tolerances, datum specifications, and notes may be shown in true profile views and refer to visible outlines, or appear in axonometric views.

(2) Axonometric Views

(a) The orientation of the annotation shall be parallel to, normal to, or coincident with the surface to which it applies.

(b) Annotation shall not overlap other annotation.

(c) Annotation shall not overlap the part.

3.1.2 Design Model Requirement. A design model is required and shall be in accordance with para. 3.2 and Section 4.

3.2 General Model Requirements

The following paragraphs describe general requirements for a model.

3.2.1 Associativity. The ability to associate digital elements shall be available and maintained. Associativity information shall be electronically accessible.

3.2.2 Model Coordinate Systems. A design model shall contain one or more model coordinate systems. A model coordinate system shall be depicted by three mutually perpendicular lines segments with its origin located at the intersection of the three axes.

Each axis shall be labeled and the positive direction shown. Model coordinate systems shall be right-handed unless otherwise specified. See Fig. 3-1.

3.2.3 Applications of Supplemental Geometry. When supplemental geometry is used, there shall be a clear distinction between the supplemental geometry and the design model geometry.

(a) Represented Line Element. The following geometric tolerances may use a represented line element to clarify the directionality of a two-dimensional tolerance zone of parallel lines. When a represented line element is used to indicate the direction of a geometric tolerance application, the leader from the feature control frame shall terminate on the represented line element in an arrowhead. See Fig. 10-4.

(1) Straightness applied to the line elements of a planar surface. See Table 10-1 and Fig. 10-4.

(2) Orientation tolerance applied on an Each Element basis. See para. 10.2.2(a) and Fig. 10-9.

(3) Line profile. See para. 10.2.3(g) and Fig. 10-20.

(b) Associativity. The represented line element, the feature control frame, and the controlled feature should be organized as an associated group. See Figs. 10-4, 10-9, and 10-20.

Copyright ASME International
Provided by IHS under license with ASME
No reproduction or networking permitted without license from IHS Not for Resale

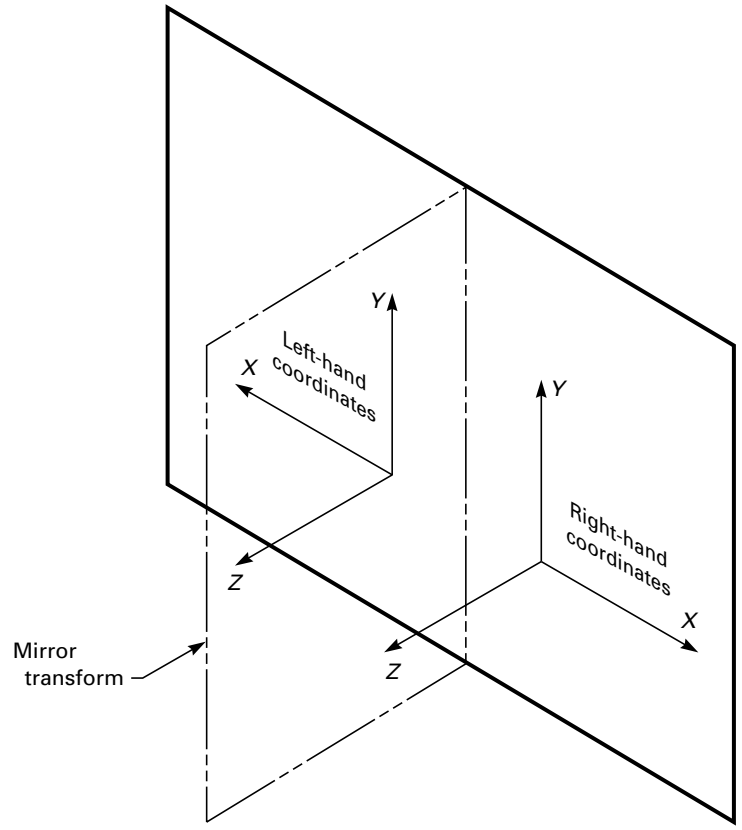

(a) Mirror image relationship

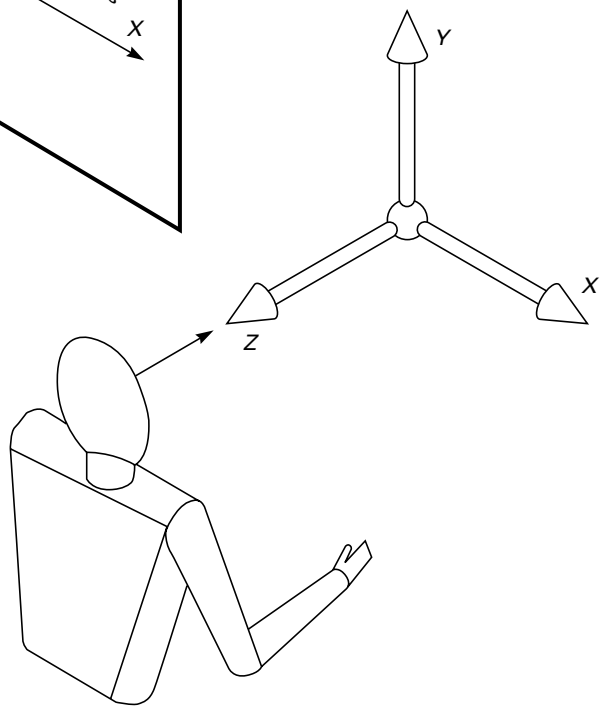

Right-hand coordinate system:
When observed in the –*Z* direction with positive *Y* ascending, positive *X* is directed to the right-hand side of the observer.

(b) Recognizing the right-hand system.

3.2.2

Fig. 3-1 Left-Hand and Right-Hand Model Coordinate Systems

Copyright ASME International
Provided by IHS under license with ASME
No reproduction or networking permitted without license from IHS
Not for Resale

3.2.4 Part Features Not Fully Modeled. A simplified representation of part features such as threads, holes, fillets, rounds, and drafts may be shown using partial geometry definition, annotations, attributes, or a combination thereof. See Fig. 5-4.

3.3 General Method Requirements

Data Set Methods. The following paragraphs cover the product definition methods listed below. Each different method for specifying product definition is used in support of different industry processes and requirements. The data set is the original for all of the methods, and any hard copy output is a derivative.

3.3.1 Model Only. The following paragraphs describe requirements when complete product definition is contained in the model.

(a) Product definition data, including but not limited to notes, parts lists, marking requirements, dimensions, and tolerances shall be contained or referenced in the data set.

(b) The data elements of a drawing format as defined in ASME Y14.1 or ASME Y14.1M are not required, except for the following, which shall be contained in the data set:

(1) name and address of the company or design activity corresponding to the Commercial and Government Entity (CAGE) code for the data set

(2) data set title

(3) data set number

(4) approval indicators and approval dates

(5) contract number when required

(6) originator's name and date

(7) CAGE Code when required for identification of the design activity whose data set number is used

(c) When working with a model, the first or third angle projection symbol in accordance with ASME Y14.3M is not required.

3.3.2 Model and Drawing. The following paragraphs describe requirements when complete product definition is contained in the model and drawing.

(a) A complete definition of a product shall contain a model and a drawing that may contain orthographic views, axonometric views, or a combination thereof. Annotation may be applied to the model, or on the drawing, or a combination thereof.

NOTE: The development of a drawing that provides a complete product definition is allowed.

(b) Product definition data created or shown in the model and subsequently shown on the drawing shall be in agreement.

(c) Product definition data created and shown on the drawing shall not conflict with product definition data in the model.

(d) The drawing shall contain a drawing border and title block information in accordance with ASME Y14.1 or ASME Y14.1M.

(e) The drawing shall reference all applicable models and data for the product specified on the drawing.

(f) Minimum drawing hard copy output capability shall be in accordance with ASME Y14.4M, ASME Y14.3M, or a combination thereof, and ASME Y14.1 or ASME Y14.1M, and ASME Y14.2M.

(g) Annotation displayed on the drawing shall be interpretable without the use of query.

(h) When complete product definition is not contained on the drawing, it shall be noted.

(i) When complete product definition is not contained in the model, it shall be noted.

3.4 Management Data

Management data that is not placed on a drawing shall be placed on the model or in the data set separate from the model or drawing as follows:

3.4.1 Management Data in the Data Set. The following management data shall be contained in the data set:

(a) application data

(b) approval

(c) data set identification

(d) design activity transfer

(e) revision history for the data set

3.4.2 Management Data on a Model. Management data placed on a model shall be placed on a management data annotation plane or an equivalent method. The annotation plane shall be available for display with the model. When displayed, the management data annotation plane does not rotate with the model. Management data placed on a model includes, but is not limited to the following:

(a) ASME Y14.41M Note

(b) CAD Maintained Notation

(c) Design Activity Identification

(d) Duplicate Original Notation

(e) Item Identification

(f) Metric Notation

(g) Navigation Data

3.5 Security Marking

Security marking shall be placed in the file(s) or in the referenced document(s) to which it applies. The following requirements pertain to models.

3.5.1 Location of Security Marking on Models. Security marking shall be placed on an annotation plane, or equivalent. The annotation plane or equivalent, containing this information, shall be available for display with the model. Reproductions of technical data, or any portions thereof, subject to asserted restrictions, shall

Copyright ASME International
Provided by IHS under license with ASME
No reproduction or networking permitted without license from IHS Not for Resale

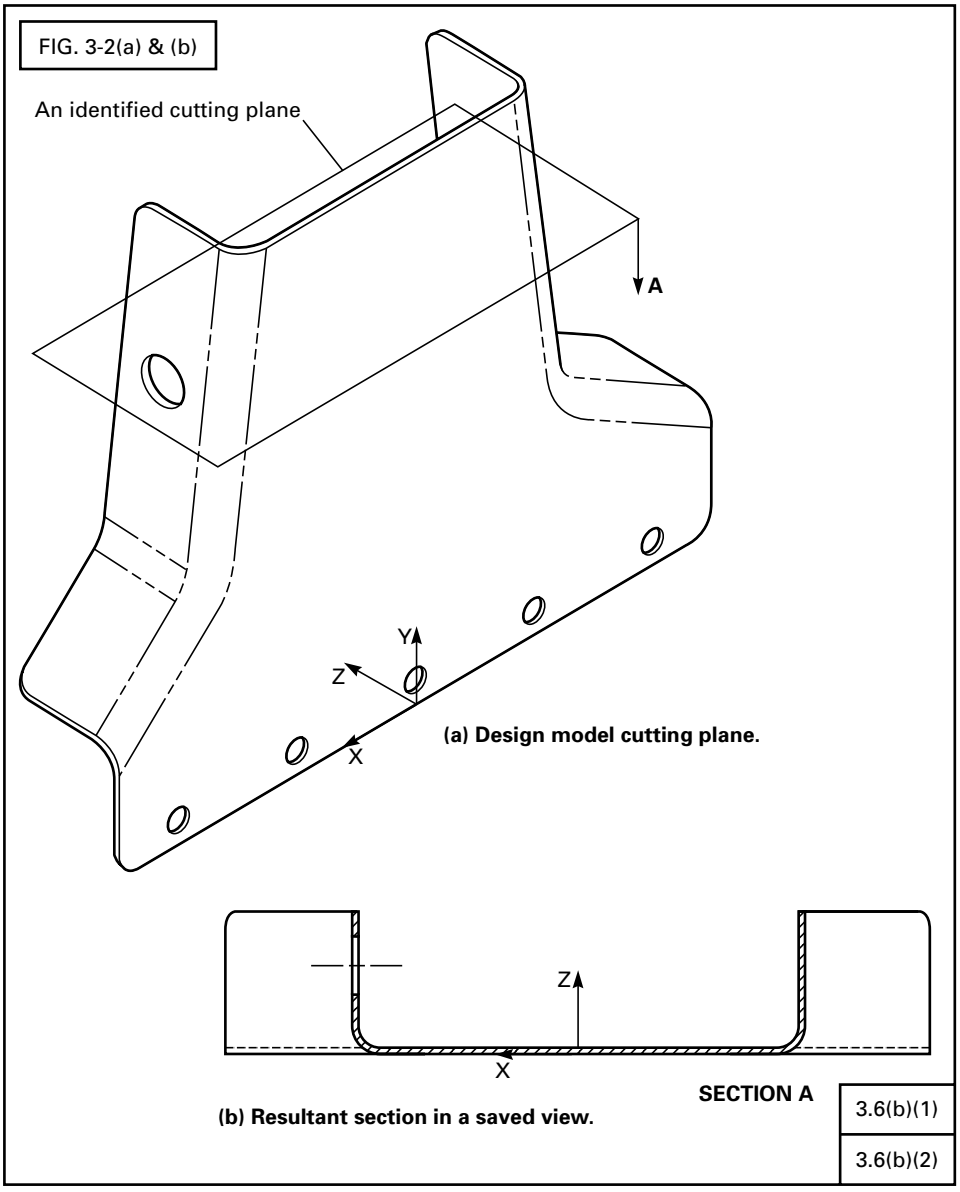

Fig. 3-2 Design Model Cutting Plane

also reproduce the asserted restrictions. When displayed, the security data annotation plane does not rotate with the model.

3.5.2 Government, Department of Defense, and Other Federal Agencies Security Marking. Models containing classified information:

(a) Shall contain the applicable security markings.

(b) Shall be controlled in accordance with the applicable security level.

(c) The applicable security markings shall be constantly displayed for all mediums of viewing.

3.5.3 Company Security Marking. Models containing company intellectual property may include notes to this effect. These include, but are not limited to, the following:

Company Proprietary Notes
Competition Sensitive

The display and control shall be in accordance with company policy.

3.5.4 Government Notices, Statements, and Legends. Models may require government notices, statements, and legends. Contractual requirements determine which are applicable. These include, but are not limited to:

Copyright Notices
Distribution Statements

Copyright ASME International
Provided by IHS under license with ASME
No reproduction or networking permitted without license from IHS
Not for Resale

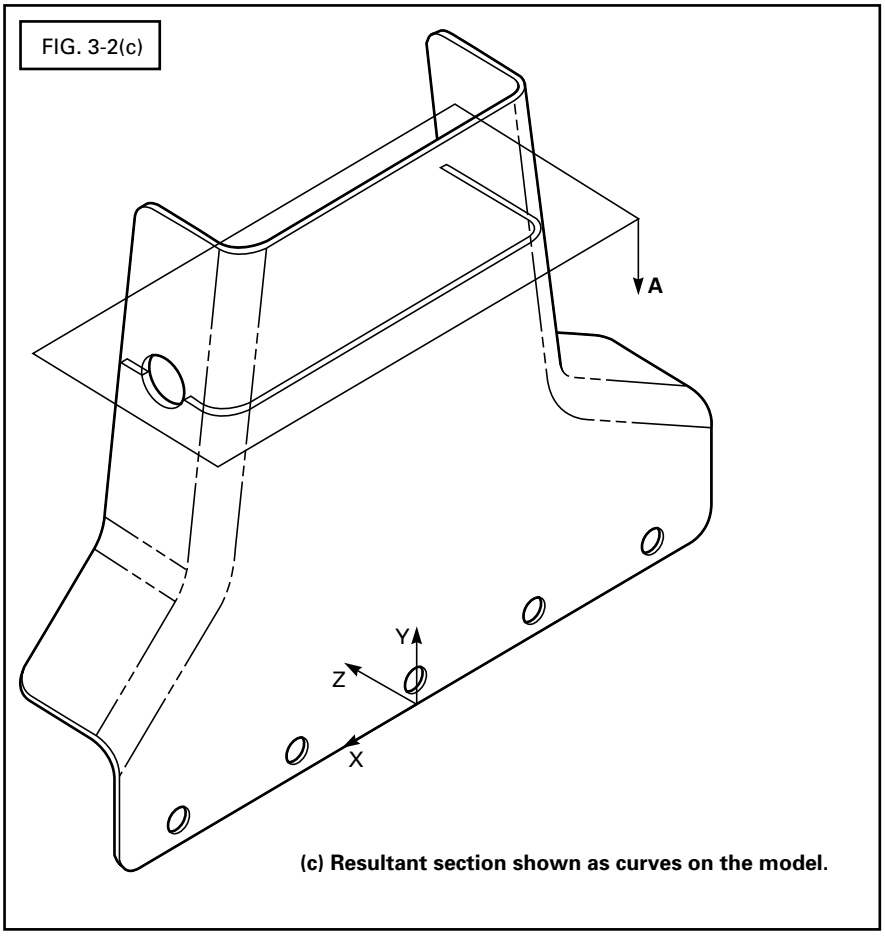

Fig. 3-2 Design Model Cutting Plane (Cont'd)

Export Control Notices
Rights in Data Legends

3.6 Views On Models

See ASME Y14.3M for sections and views. The following paragraphs describe exceptions or additions for views on models.

(a) Saved Views. Saved views of a design model may be defined to facilitate presentation of the model and its annotation.

(1) A saved view shall have an identifier.

(2) A saved view shall be retrievable on demand.

(3) A saved view shall contain a model coordinate system that denotes the direction of the view relative to the model.

(4) A saved view may contain one or more of the following:

(a) annotation plane

(b) a selected set of annotation

(c) a selected set of geometry

(b) Sections. Saved views may be used to retain sections. All sections shall be the same scale as the design model.

(1) Cutting Plane. A representation of a cutting plane shall be used to indicate the location and viewing direction of a section. The edges of the cutting plane shall be solid or phantom lines. A means to identify all cutting planes in a model shall be available. A visible viewing arrow or arrows shall be included to show the direction in which the section is viewed. See Fig. 3-2. To relate the cutting plane to its section view, upper case letters such as A, B, C, etc., shall be placed near the viewing arrow or arrows. The corresponding section views are identified as SECTION A, or SECTION A-A when two viewing arrows are used. Section letters should be used in alphabetical order excluding I, O, Q, S, X, Y, and Z. When the alphabet is exhausted, additional sections shall be indicated using double letters in alphabetical order, as in AA, AB, AC, etc., or AA-AA, AB-AB etc., when two viewing arrows are used.

(2) Depiction of Section Cut. The result of the section cut may be shown either by removing material from the part, see Fig. 3-2(b), or by the display of the curves overlaid on the model that result from intersecting the cutting plane with the part or both, see Fig. 3-2(c).

Copyright ASME International
Provided by IHS under license with ASME
No reproduction or networking permitted without license from IHS Not for Resale

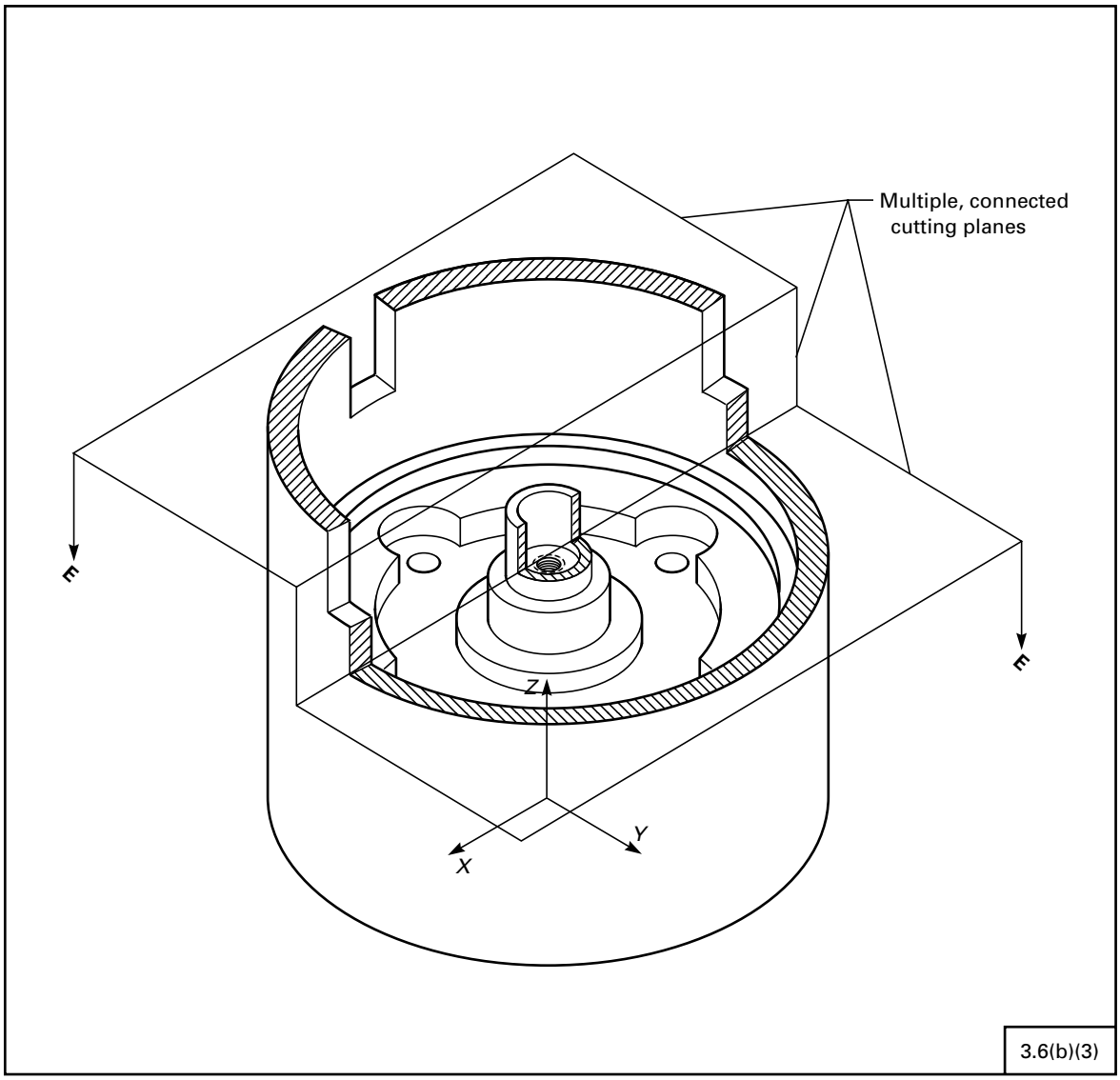

Fig. 3-3 Design Model With Offset Section

(3) Offset Sections. Multiple, connected cutting planes shall be used for offset sections. See Fig. 3-3.

(4) Aligned Sections. Aligned sections shall not be used on design models.

(5) Removed Sections. Removed sections shall not be used on design models.

(6) Revolved Sections. Revolved sections shall not be used on design models.

(7) Broken-out Sections. Broken-out sections shall be accomplished as offset sections. See para. 3.6(b)(2).

(8) Foreshortened and Aligned Features. Foreshortened and aligned features shall not be used on design models.

(9) Rotation of Features. Rotation of features shall not be used on design models.

(10) Associativity. Section views shall be derivatives of the design model. Changes to the design model shall cause section views to be updated accordingly.

4 DESIGN MODEL REQUIREMENTS

This Section establishes the requirements for a design model.

4.1 General

Design models represent ideal geometric constructs; that is, perfect dimensionality and shape aspect of the part geometry are assumed. Parts shall be modeled at a specified dimensional condition, for example minimum,

Copyright ASME International
Provided by IHS under license with ASME
No reproduction or networking permitted without license from IHS Not for Resale

maximum, or mean. The dimensional condition shall be specified as a general note.

4.1.1 Geometric Scale, Units, and Precision. The following are the requirements concerning the Scale, Units, and Precision of a design model.

(a) Scale. Design models shall be modeled at a scale of 1:1.

(b) Units. The units of measure (metric or U.S. customary) at which the design model is created shall be specified within the data set.

(c) Precision. The design model precision indicates the numeric accuracy required in the production of the part in order for it to fulfill the design intent. The number of significant digits of the design model shall be specified in the data set. The number of decimal places required for the design cannot exceed the precision of the design model.

4.1.2 Model Completeness. The model shall contain geometry, attributes, and annotation as required to provide a complete definition of the part.

(a) Models not fully modeled shall be identified as such (e.g., partially modeled symmetrical part).

(b) Features that are not fully modeled shall be identified as such (e.g., threaded holes that are only shown as holes).

4.1.3 Assembly Model Completeness. Assembly model completeness shall be in accordance with para. 4.1.2, except part and sub-assembly models shown in the assembly model need only have sufficient detail shown to ensure correct identification, orientation, and placement. The assembly model may be shown in an exploded, partially assembled, or completely assembled state. The placement of parts and sub-assemblies within the assembly may alternatively be defined via annotation, or a combination of annotation and pictorial representation of the model.

4.1.4 Installation Model Completeness. Installation completeness shall be in accordance with paras. 4.1.2 and 4.1.3, except part and assembly models shown in the installation model need only be sufficiently detailed to provide installation and space requirements. The maximum envelope for parts and assemblies may be shown using supplemental geometry, annotation, or a combination of both. Location and orientation of parts and assemblies may be shown by geometric definition, annotation, or a combination of both.

5 COMMON REQUIREMENTS FOR PRODUCT DEFINITION DATA

This Section establishes the common requirements for the application, display management, and query of product definition data. Specific requirements for particular types of product definition data are described in Sections 6 through 10.

5.1 Common Requirements

The following paragraphs describe requirements common to models and drawings.

5.1.1 Display Management. Display management shall include the ability to enable or disable the display of all annotation, annotation by type, or selected annotation. See Fig. 5-1.

5.1.2 Hard Copy. A hard copy of any given visual display shall be available on demand. When a hard copy is intended to be used as an engineering drawing, it shall meet applicable drawing standards.

5.2 Model Requirements

The following paragraphs describe requirements for annotation applied to a design model. These are general requirements that apply to all types of annotation. Specific requirements for particular types of annotation are addressed in Sections 6 through 10. See Fig. 5-2 for a diagram showing the relationship between annotation and model geometry.

5.2.1 Associativity. The following are general requirements for defining an associative relationship between digital elements.

(a) Selection of Associated Entities. Annotation may be associated to a feature, a group of features, or a portion of an applicable feature. For an example of the associated features for a dimension, see Fig. 5-3.

(b) Associated Groups. Annotation, model geometry, and supplemental geometry may be placed into associated groups to indicate their relationships. For example:

(1) Supplemental geometry used to define location, orientation, or further clarify the application of annotation to a model.

(2) A model coordinate system for datum symbols and datum targets.

(3) Other Annotation. This could include qualifying notes and size limit callouts.

5.2.2 Attributes. Attributes are used to capture additional information that is not shown using geometry or in the model annotation. Attributes shall be available on demand. Attributes may be presented using text description, forms, or other techniques. See Fig. 5-4 for an example of how the attributes of a hole could be represented. Applications of attributes include, but are not limited to, coatings, knurling, threaded holes, and pins.

5.2.3 Annotation Planes. The orientation of the annotation plane shall be maintained relative to the model geometry as the model is manipulated in 3D. For example, as the geometry is rotated, the text rotates correspondingly. See Fig. 5-5. When a CAD system does not support maintenance of annotation plane orientation relative to the model, annotation planes shall not be used.

Copyright ASME International
Provided by IHS under license with ASME
No reproduction or networking permitted without license from IHS Not for Resale

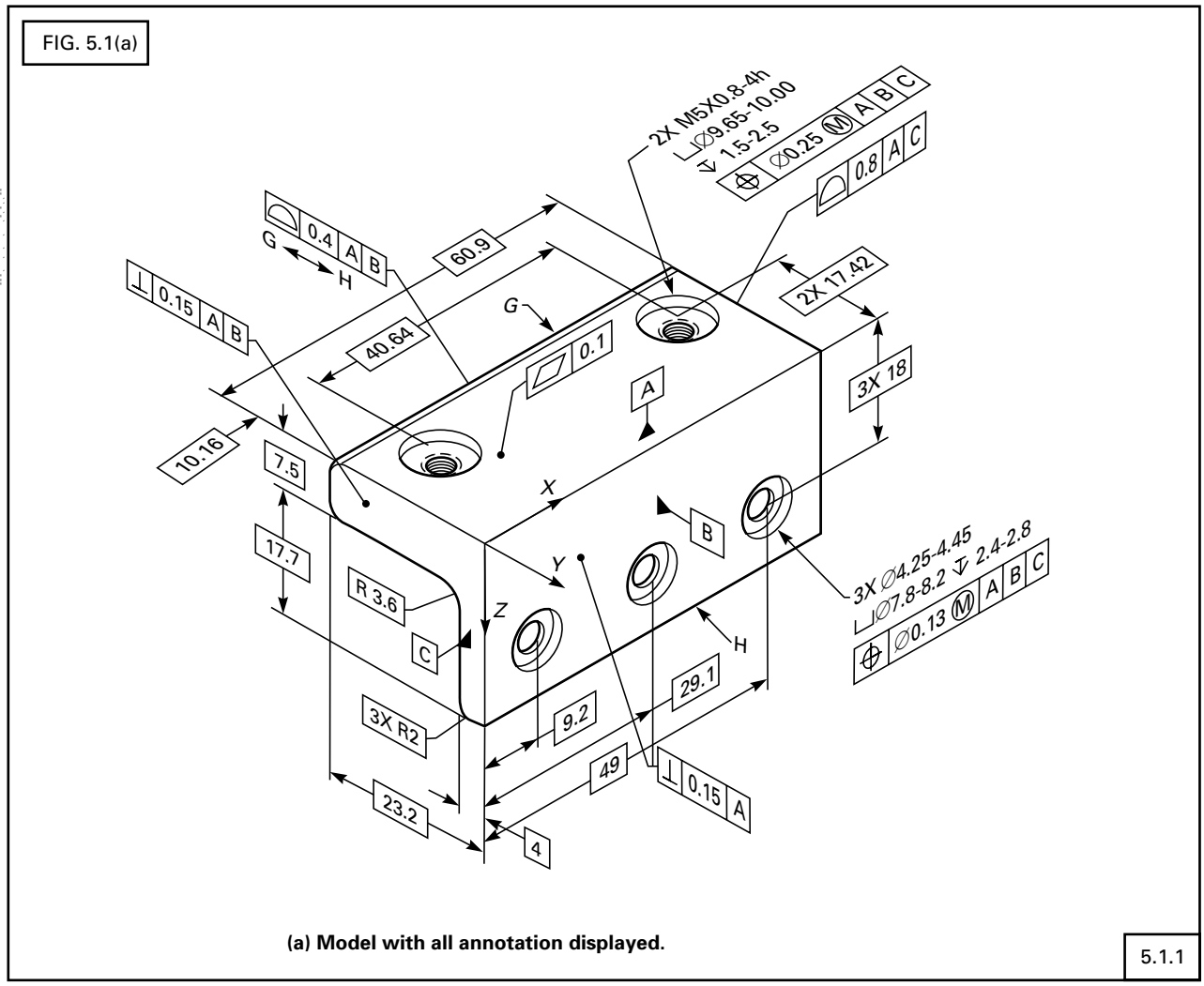

Fig. 5-1 Display Management

5.2.4 Leader Lines. The following paragraphs describe requirements for leader lines in models.

(a) Leader lines directed to represented line elements shall terminate with an arrowhead. See Fig. 10-20.

(b) When an indicated element is a surface, the leader shall terminate with a dot within the bounds of the surface. Leader lines may terminate on the rim or edge of a feature of size when doing so provides a clearer understanding of the intention of the annotation.

(c) Leader Lines for Datum Targets. A solid leader line shall be used to indicate all datum targets in a design model. See para. 3.1.1(b)(2).

(d) Leader lines shall be directed to an associated entity.

5.2.5 Direction Dependent Tolerances. When a direction dependent tolerance (e.g., straightness) is applied to a design model, the direction shall be explicitly defined as described in paragraph (a) or (b).

(a) Supplemental geometry is added to the model to show the direction of application. The model geometry to which the tolerance applies shall be defined as the associated geometry for the annotation. See Figs. 10-4, 10-9, and 10-20, and para. 3.2.3(a).

(b) Direction dependent tolerances may use a model coordinate system vector to define the direction of application. The model coordinate system vector, associated feature of the model, and tolerance shall be organized as an associated group. See Figs. 10-5, 10-10, and 10-21.

5.2.6 Indicating Limited Application of a Tolerance. Limited length, area, and location indicators may consist of, but are not limited to, supplemental geometry and associative annotation. When supplemental geometry is used, it shall be located on the model geometry. See Figs. 9-3 and 10-1.

5.2.7 Query. The model shall contain information needed to enable the following types of queries.

Copyright ASME International
Provided by IHS under license with ASME
No reproduction or networking permitted without license from IHS Not for Resale

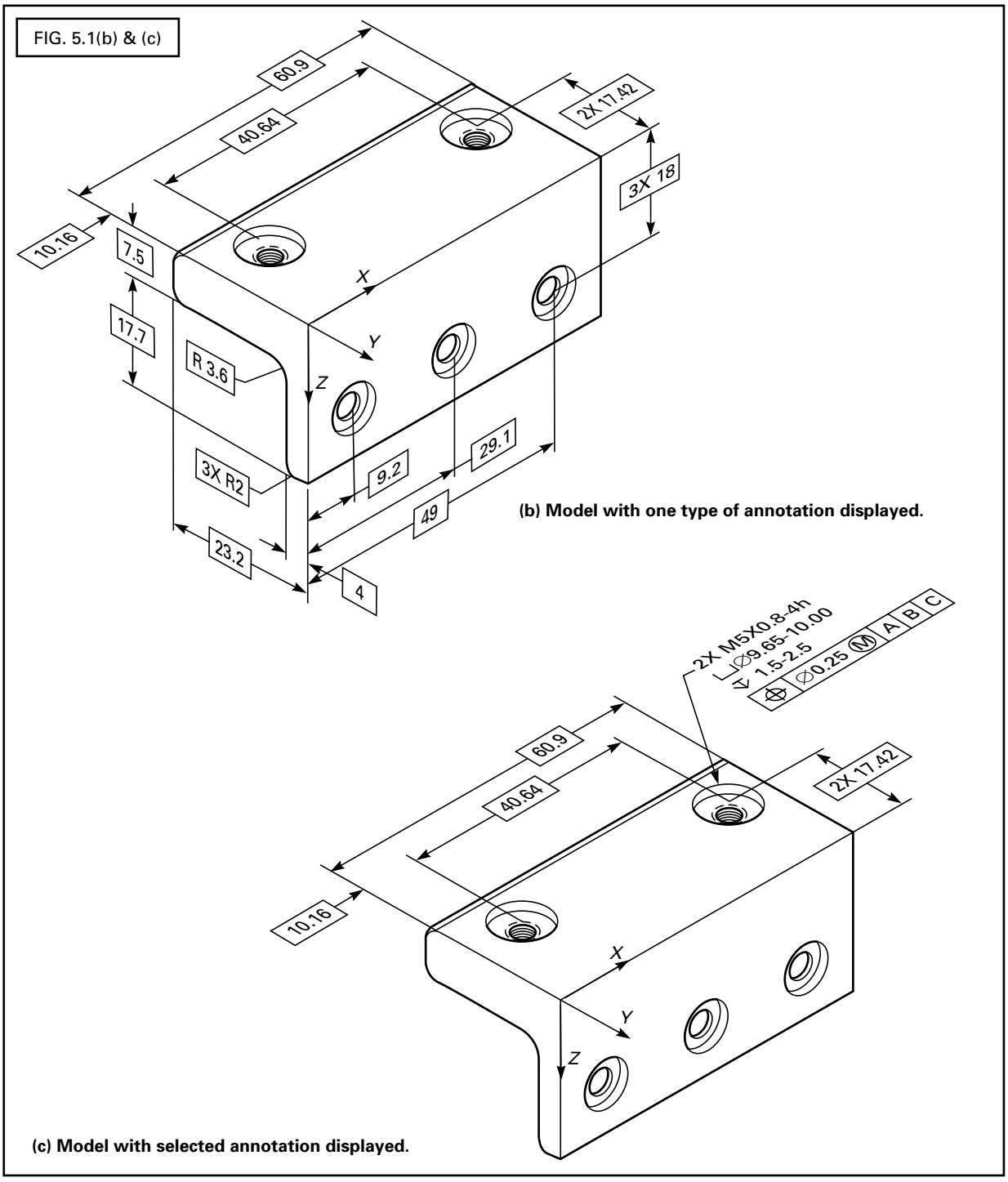

Fig. 5-1 Display Management (Cont'd)

Copyright ASME International
Provided by IHS under license with ASME
No reproduction or networking permitted without license from IHS
Not for Resale

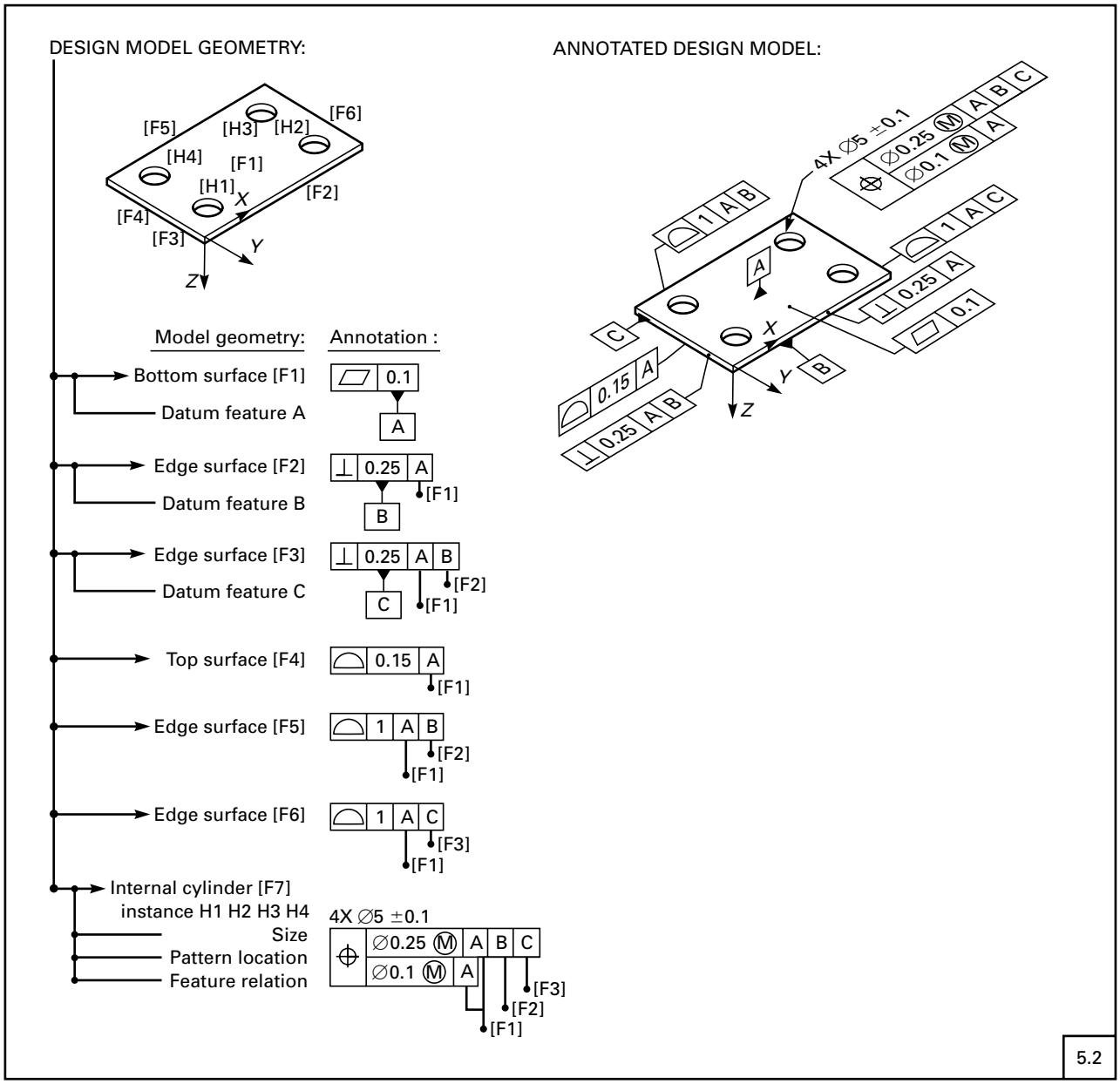

Fig. 5-2 Annotation and Model Geometry Relationship

(a) Obtaining Model Values. Model values shall be obtainable from the model.

(b) Annotation to/from Model Geometry. The ability to traverse the relationship between model geometry and annotation in either order shall be available within the model. This includes:

(1) Graphic Display of Associated Entities. The associated entities for a piece of annotation shall be highlighted, or otherwise distinguished from other entities on the display, on demand. See Figs. 5-3 and 9-10(b) through (f).

(2) Graphic Display of Associated Annotation. All annotations associated with selected geometry or features shall be highlighted, or otherwise distinguished from other entities, on demand. See Figs. 5-6 and 10-3(c) and (d).

(c) Digital Element Identifiers. Digital element identifiers shall be obtainable from the model. See Fig. 5-7.

(d) Model Geometry and Features

(1) Features shall be identifiable by selecting a geometric element of the feature.

Copyright ASME International
Provided by IHS under license with ASME
No reproduction or networking permitted without license from IHS
Not for Resale

FIG. 5.3(a) & (b)

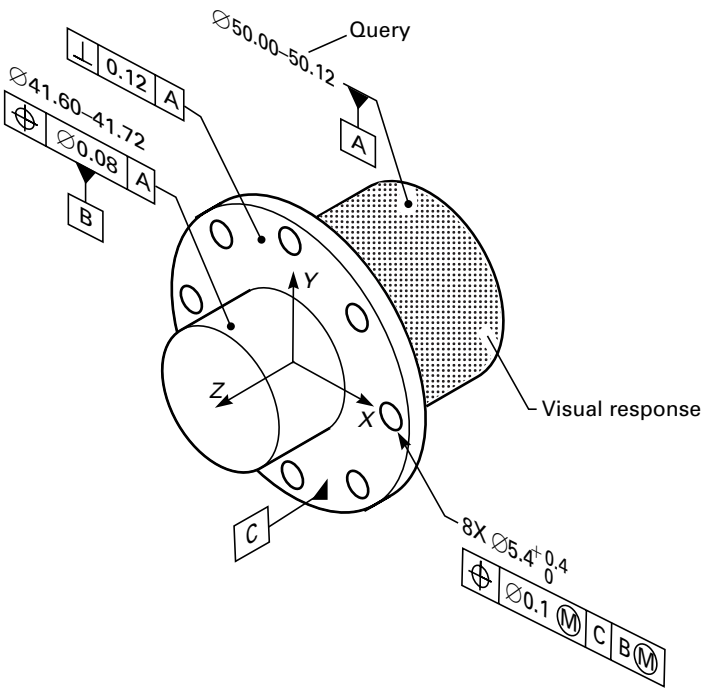

(a) Size tolerance query.

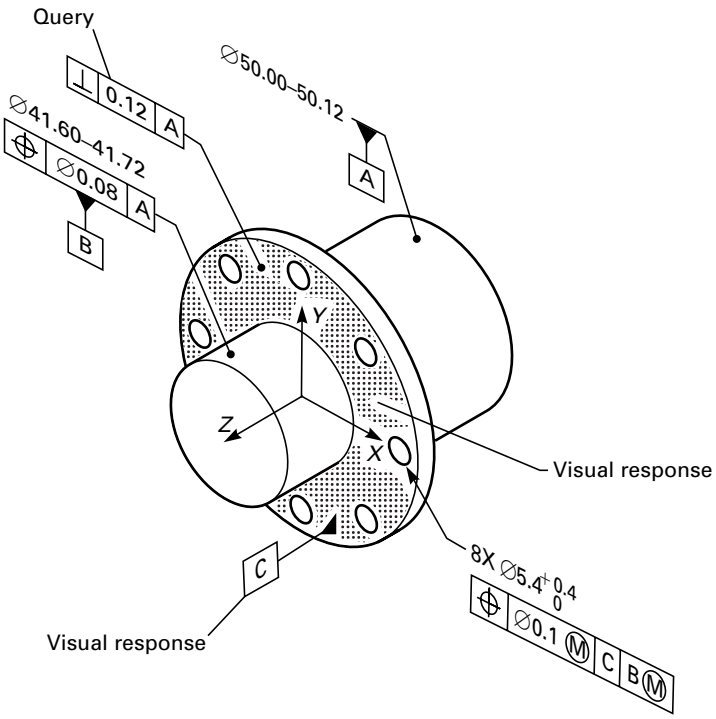

(b) Geometric tolerance query.

5.2.1(a)
5.2.7(b)(1)

Fig. 5-3 Tolerance Query Associativity

Copyright ASME International
Provided by IHS under license with ASME
No reproduction or networking permitted without license from IHS
Not for Resale

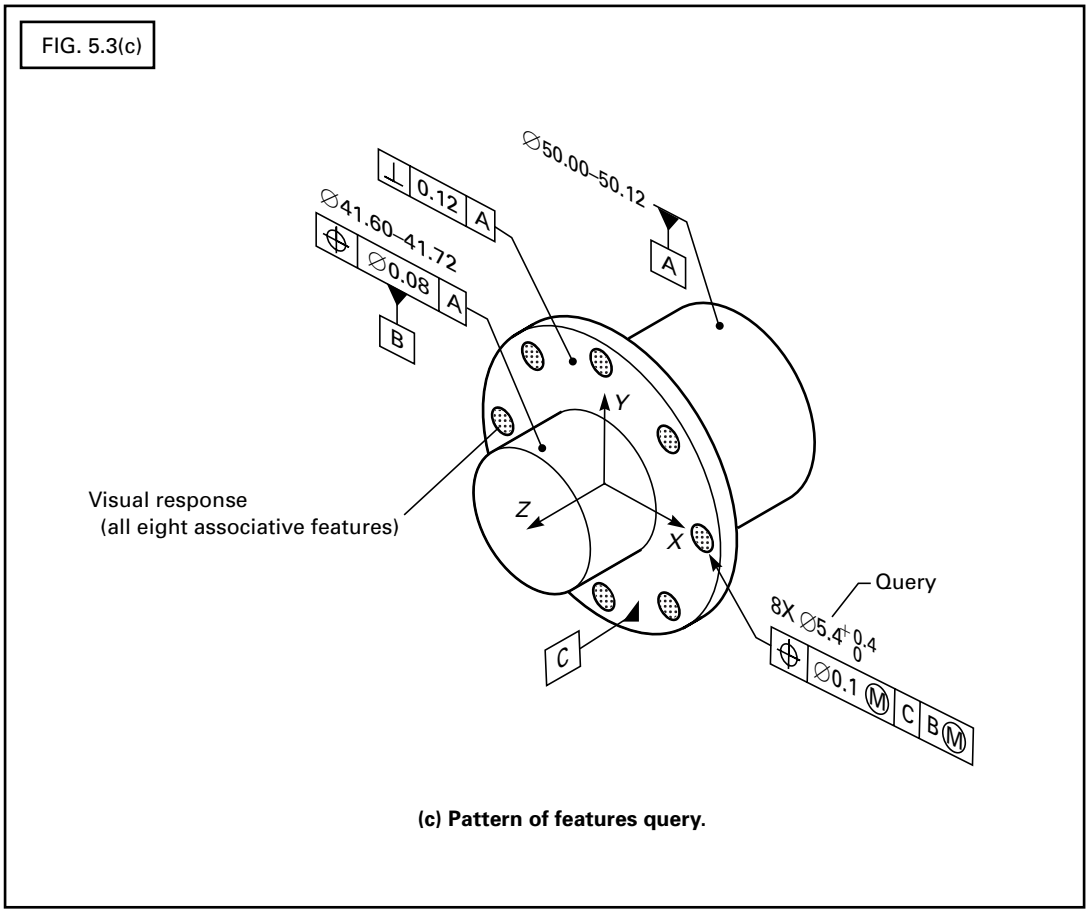

Fig. 5-3 Tolerance Query Associativity (Cont'd)

(2) All geometric elements in an associated group of features shall be identifiable by selecting any geometric element within the group.

(3) All features in a group of features shall be identifiable by selecting one of the features.

(e) Feature Control Frames, Datum Feature Symbols, and Datum Targets

(1) Upon selection of a feature control frame, the datum feature symbols and datum target symbols that correspond to the datum references shall be highlighted or otherwise distinguished from other entities on the display. See Fig. 5-8.

(2) Upon selection of a datum target symbol, all datum target symbols sharing the same letter shall be highlighted or otherwise distinguished from other entities on the display. See Fig. 5-9(a).

(3) Upon selection of a datum target symbol or a datum feature symbol, other datum target symbols and datum feature symbols that have the same datum letter shall be highlighted or otherwise distinguished from other entities on the display. See Fig. 5-9(b).

(4) Upon selection of a feature control frame, the portion of the corresponding coordinate system representing the partial or complete datum reference frame referenced in the feature control frame shall be highlighted or otherwise distinguished from other entities on the display. See Fig. 5-10(a).

(f) Annotation and Supplemental Geometry. Upon selection of annotation, the supplemental geometry used in the definition of the annotation shall be highlighted or otherwise distinguished from other entities on the display. See Fig. 5-10(b).

(g) Associated Groups. Upon selection of one of the digital elements in an associated group, the members of the associated group shall be highlighted or otherwise distinguished from other entities on the display.

5.3 Drawing Requirements

See ASME Y14.3M for sections and views. The following paragraphs describe exceptions or additions for views on drawings. The following paragraphs describe general requirements for axonometric views on fully or

Copyright ASME International
Provided by IHS under license with ASME
No reproduction or networking permitted without license from IHS
Not for Resale

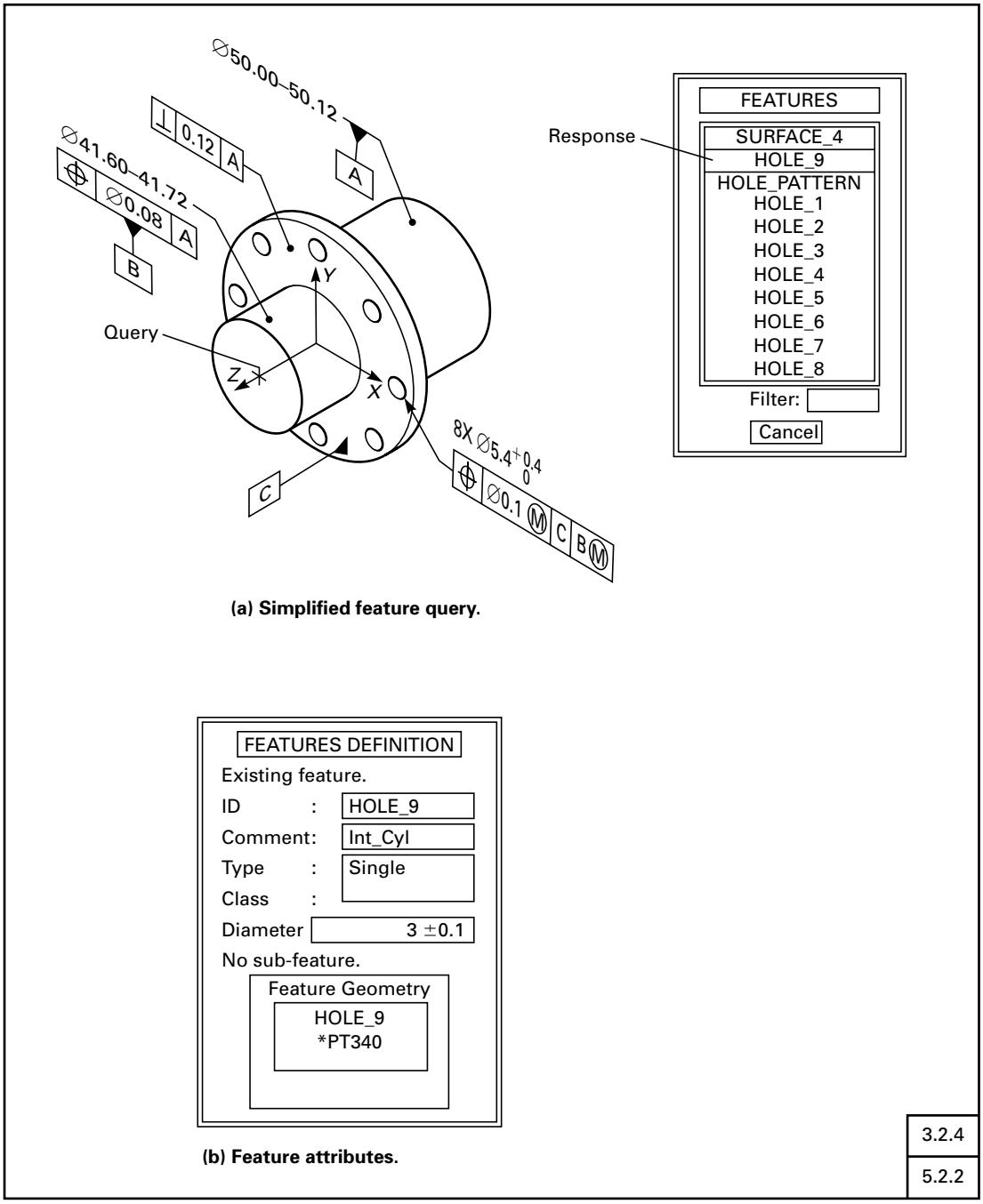

Fig. 5-4 Simplified Feature Representation and Attributes

partially defined drawings. Specific requirements for particular types of annotation are addressed in Sections 6 through 10. The relationship between a model and a drawing is illustrated in Figs. 5-11 and 5-12.

5.3.1 Orthographic Views. When orthographic views are used, the model coordinate system may be used to indicate view orientation.

5.3.2 Axonometric Views. The following paragraphs describe requirements for axonometric views.

(a) Methods of Projection for Axonometric Views. The model coordinate system showing model orientation shall be included in each axonometric view. See Fig. 5-13(a).

Copyright ASME International
Provided by IHS under license with ASME
No reproduction or networking permitted without license from IHS Not for Resale

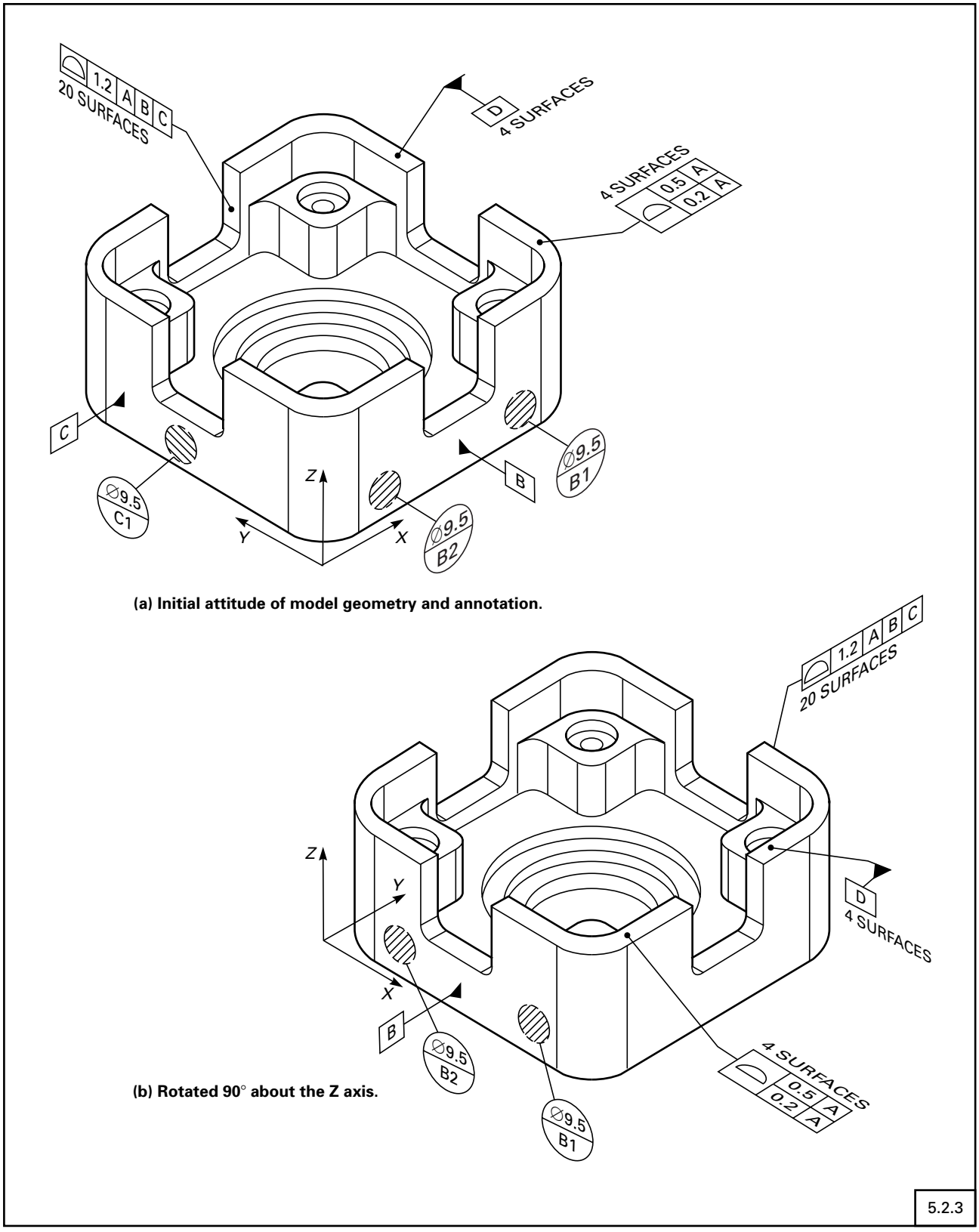

Fig. 5-5 Annotation Planes Relative to Model Geometry

Copyright ASME International
Provided by IHS under license with ASME
No reproduction or networking permitted without license from IHS
Not for Resale

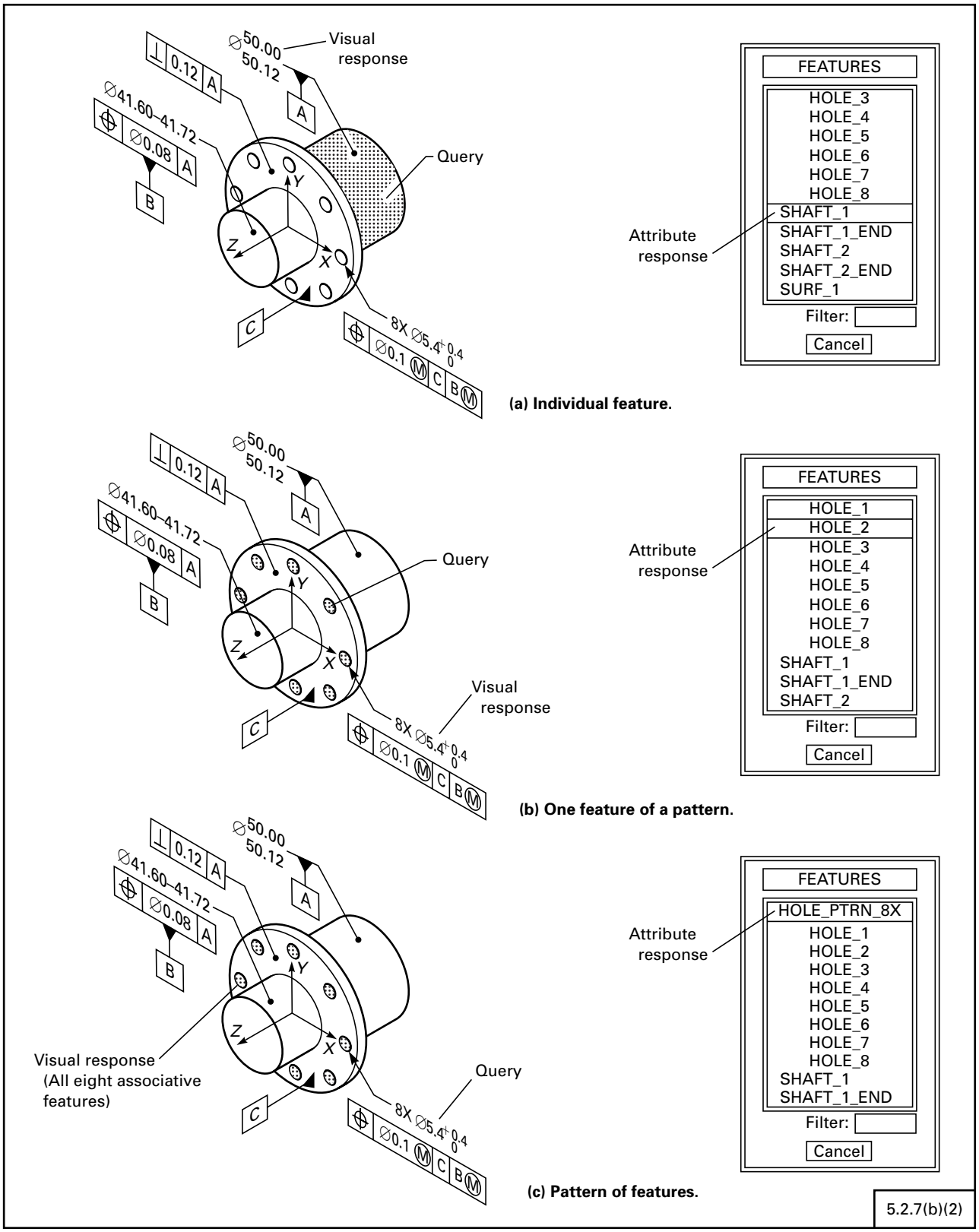

Fig. 5-6 Graphic Display of Associated Annotation

Copyright ASME International
Provided by IHS under license with ASME
No reproduction or networking permitted without license from IHS
Not for Resale

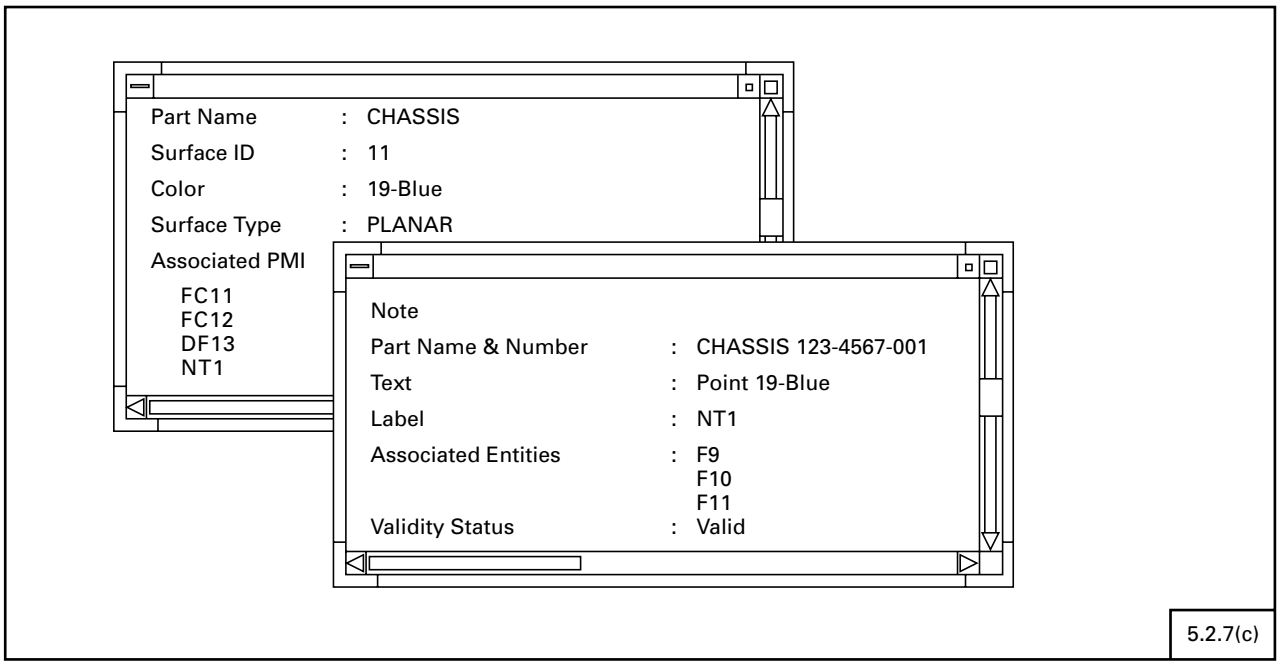

Fig. 5-7 Listing of Digital Element Identifiers

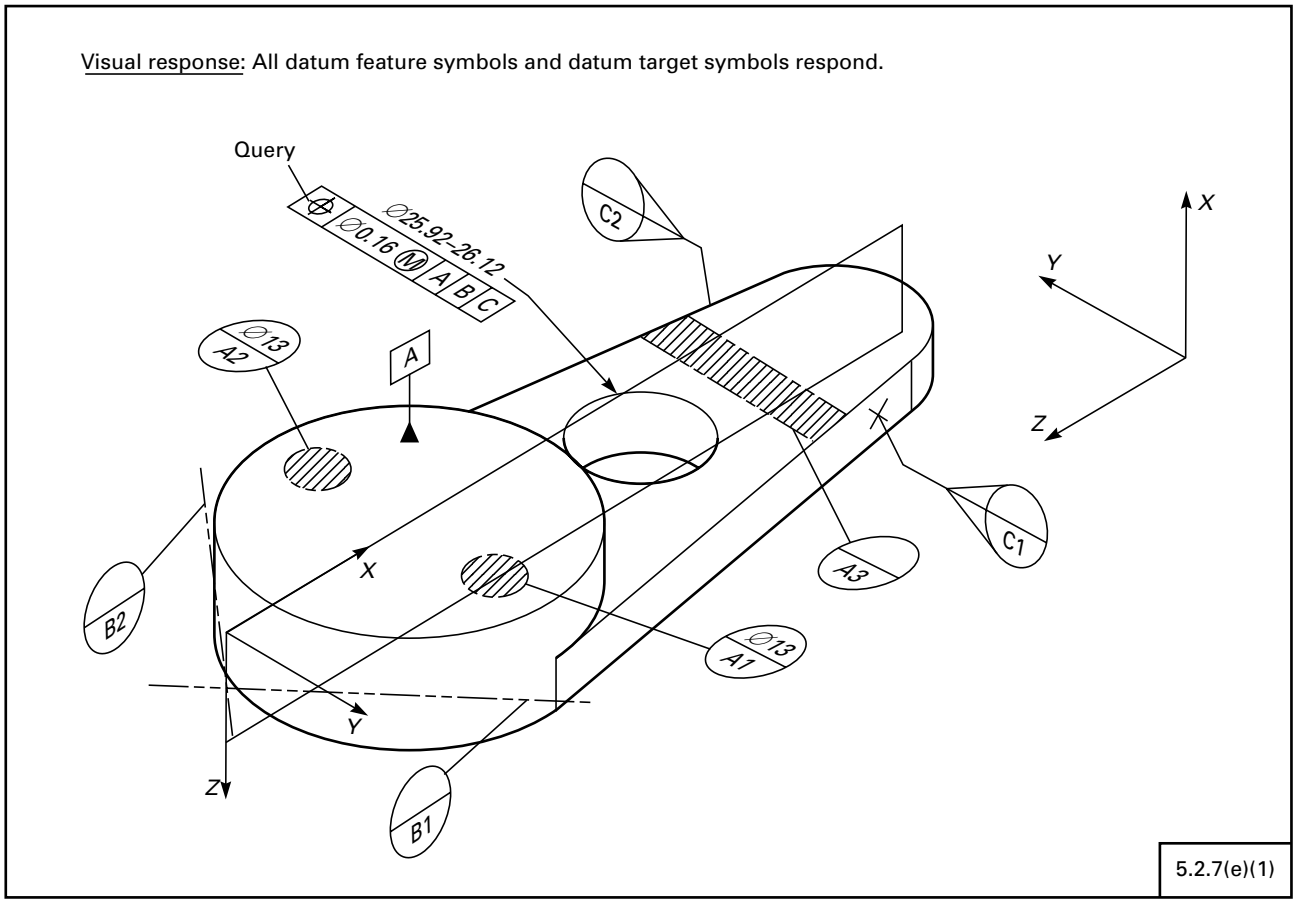

Fig. 5-8 Queries for Datum Feature Symbols and Datum Target Symbols

Copyright ASME International
Provided by IHS under license with ASME
No reproduction or networking permitted without license from IHS Not for Resale

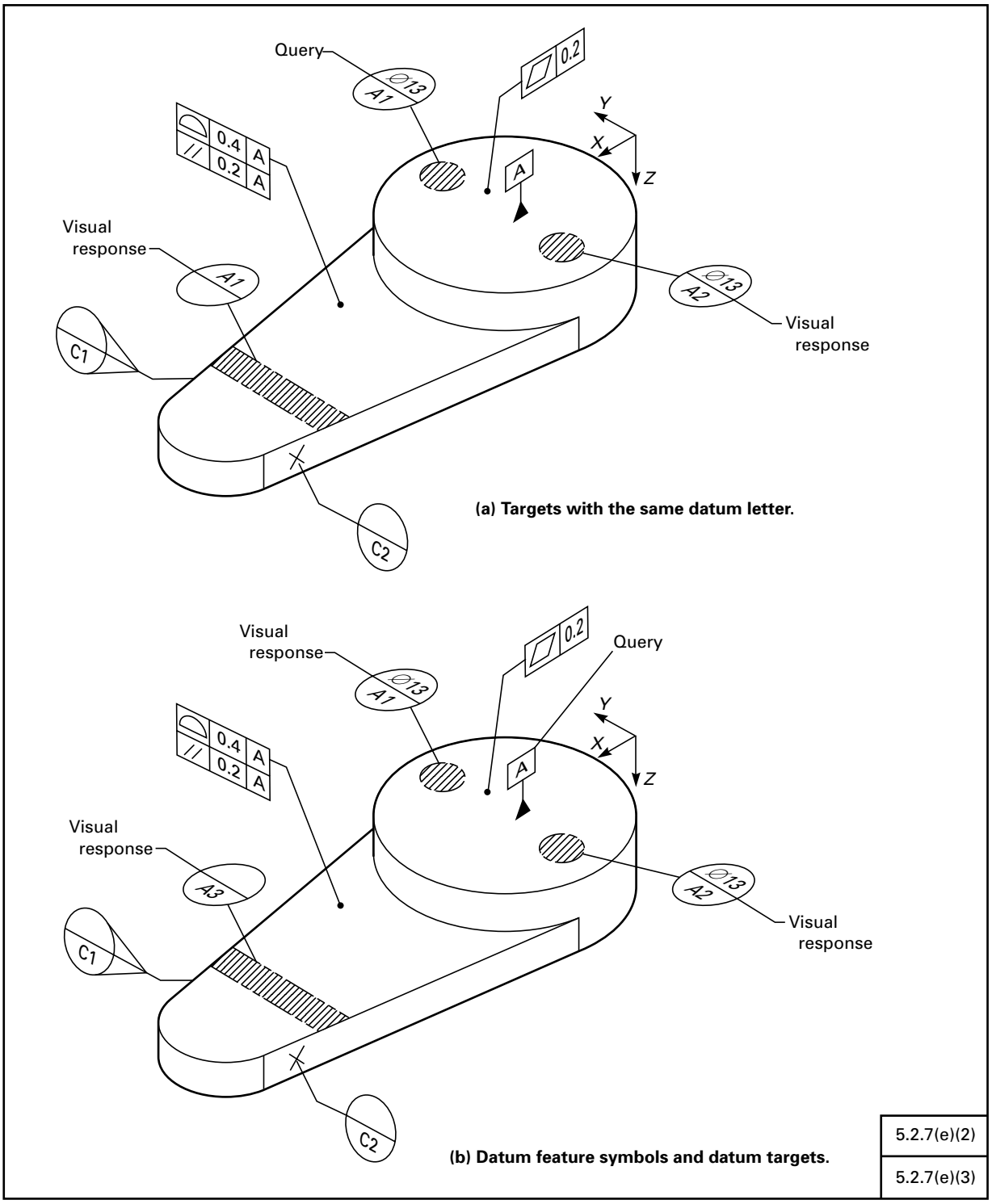

5.2.7(e)(2)

5.2.7(e)(3)

Fig. 5-9 Queries for Datum Targets

Copyright ASME International
Provided by IHS under license with ASME
No reproduction or networking permitted without license from IHS
Not for Resale

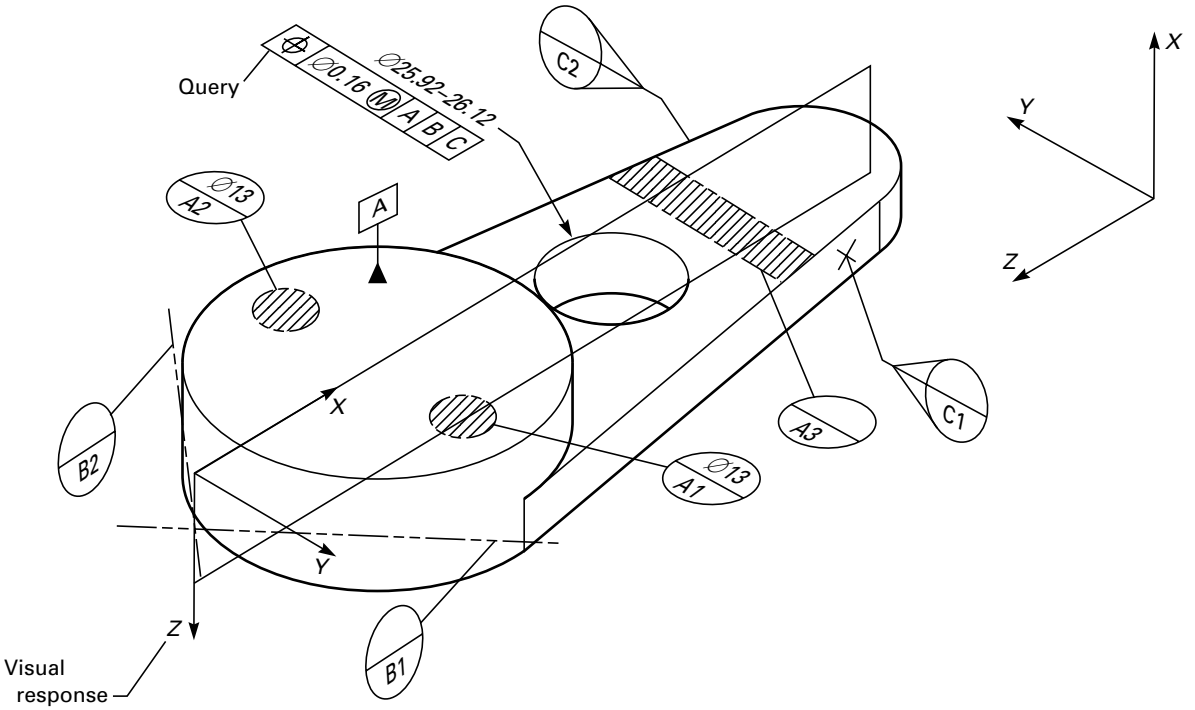

(a) Feature control frame and corresponding coordinate system.

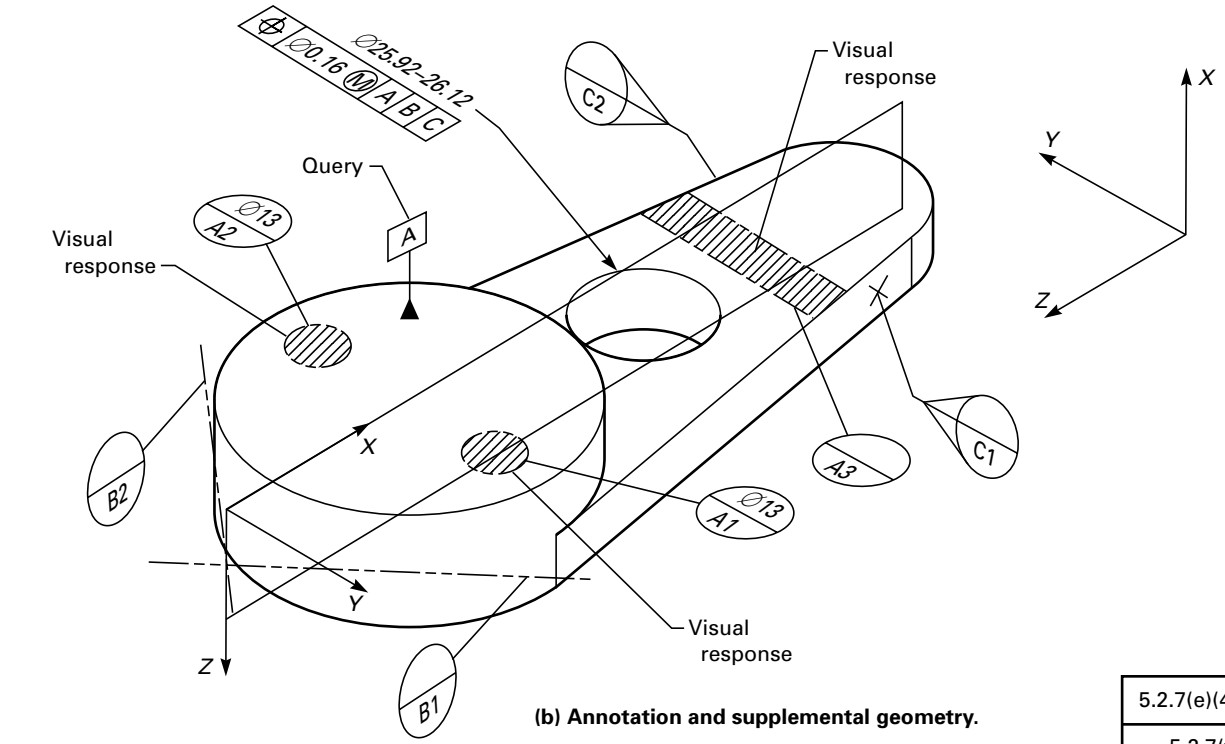

(b) Annotation and supplemental geometry.

5.2.7(e)(4)
5.2.7(f)

Fig. 5-10 Queries for Coordinates and Supplemental Geometry

Copyright ASME International
Provided by IHS under license with ASME
No reproduction or networking permitted without license from IHS
Not for Resale

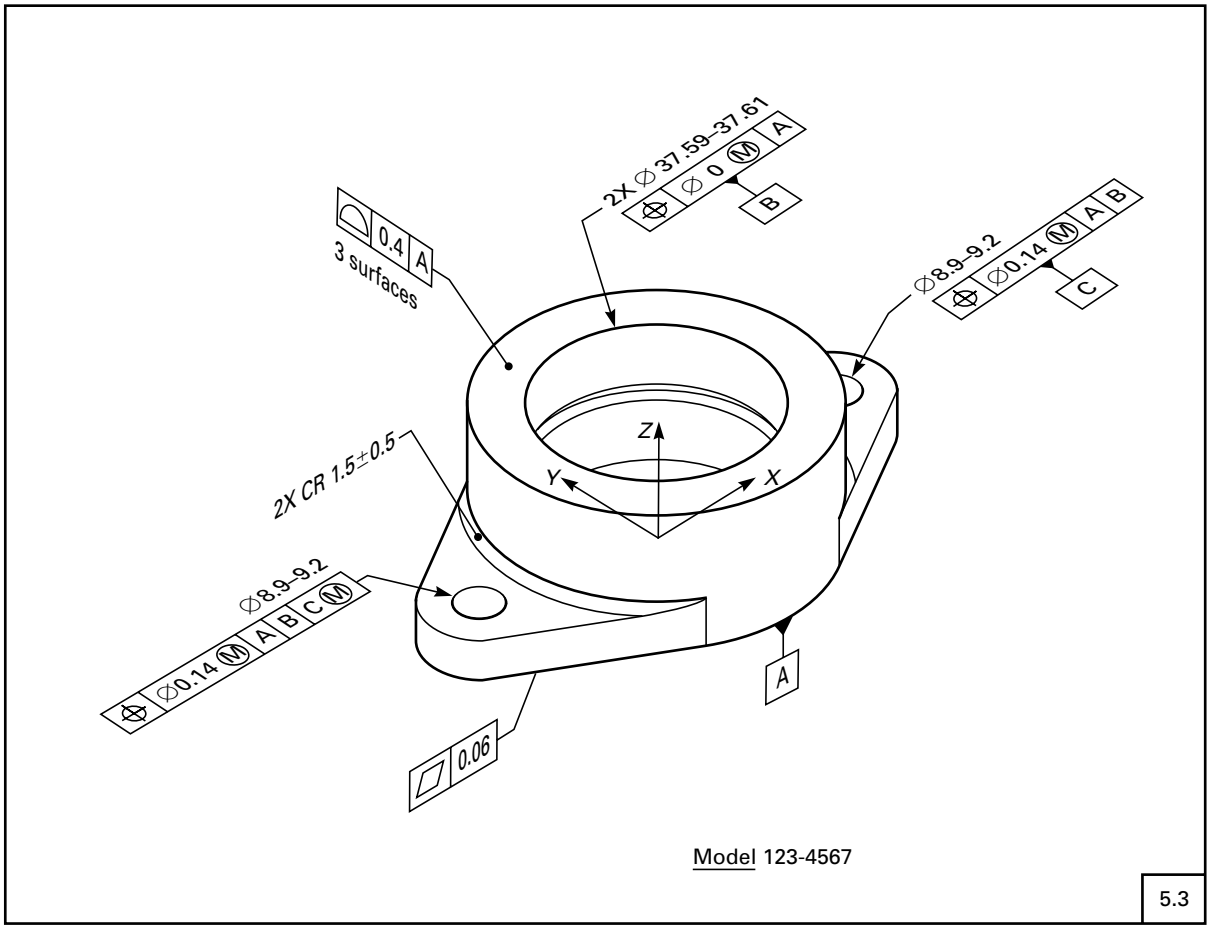

Fig. 5-11 Annotated Model

(b) Section Views. Section views may be created from axonometric views. A section view may be orthographic or axonometric.

(1) Cutting Plane. A representation of a cutting plane shall be used to indicate the location and viewing direction of a section. The edges of the cutting plane shall be solid or phantom lines. A visible viewing arrow or arrows shall be included to show the direction in which the section is viewed. See Fig. 5-13. To relate the cutting plane to its section view, uppercase letters such as A, B, C, etc., shall be placed near the viewing arrow or arrows. The corresponding section views are identified as SECTION A, or SECTION A-A when two viewing arrows are used. Section letters should be used in alphabetical order, excluding I, O, Q, S, X, Y, and Z. When the alphabet is exhausted, additional sections shall be indicated using double letters in alphabetical order, as in AA, AB, AC, etc., or AA-AA, AB-AB, etc., when two viewing arrows are used.

(2) Depiction of Section Cut. The result of the section cut may be shown either by removing material from the part [see Fig. 5-13(a), (b)], or by display of the curves overlaid on the view that result from intersecting the cutting plane with the part [see Fig. 5-13(c)].

(3) Rotation of a Section Taken from Axonometric Views. Sections taken from axonometric views may be presented in the same orientation as the parent view or may be rotated to present the section in the viewing plane of the drawing.

(4) Offset Sections. The use of a stepped or offset cutting line is supported in axonometric views. The resulting section cut geometry may be shown in its true position on the design model or drawn as if the offsets were in one plane.

(5) Aligned Sections. The use of a cutting plane line containing angular changes is supported in axonometric views. The resulting section may show all features in their true position on the design model or be drawn as if the bent cutting plane and features were rotated into a plane perpendicular to the line of sight of the sectional view.

Copyright ASME International
Provided by IHS under license with ASME
No reproduction or networking permitted without license from IHS Not for Resale

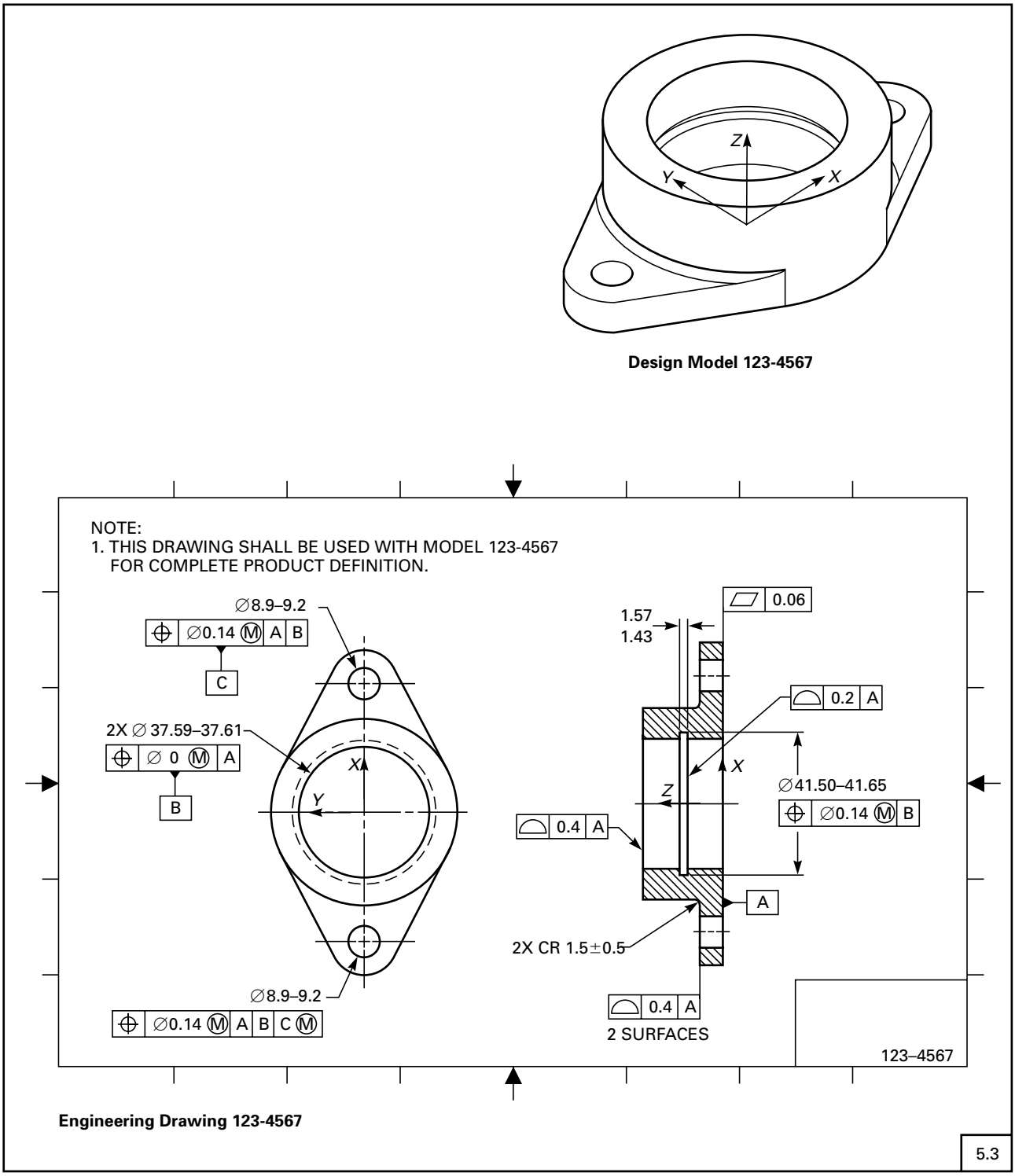

Fig. 5-12 Design Model and Drawing

Copyright ASME International
Provided by IHS under license with ASME
No reproduction or networking permitted without license from IHS
Not for Resale

FIG. 5-13(a) & (b)

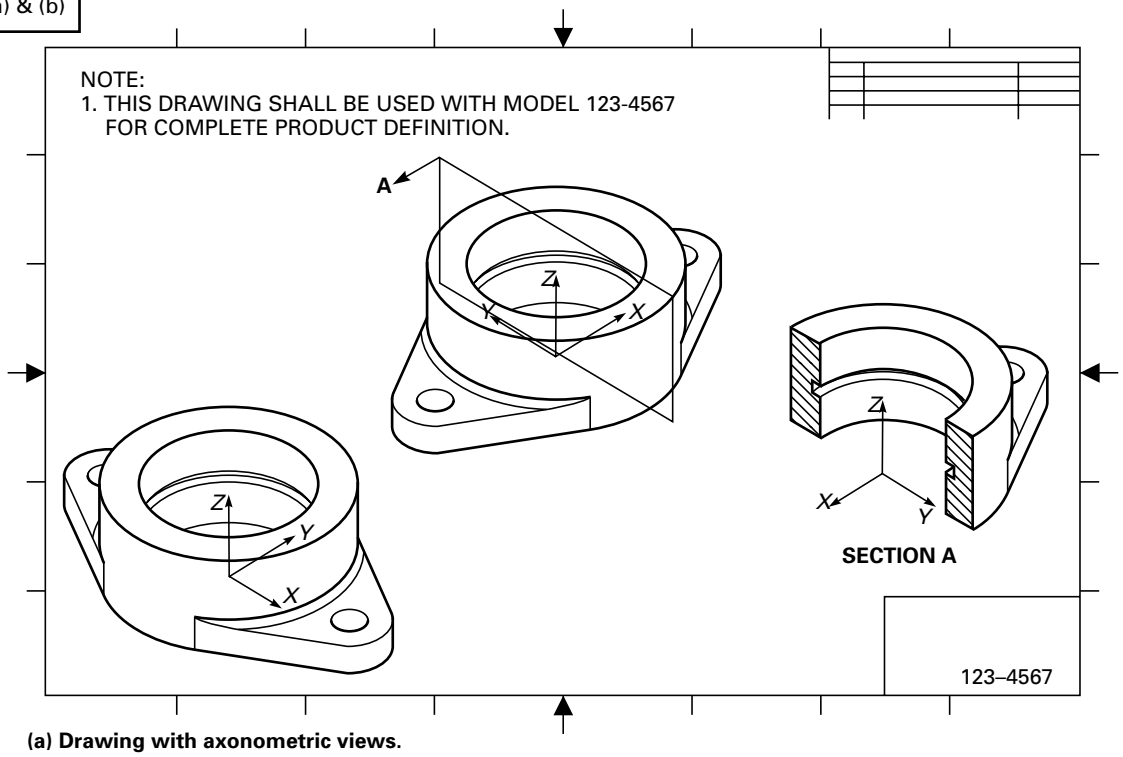

(a) Drawing with axonometric views.

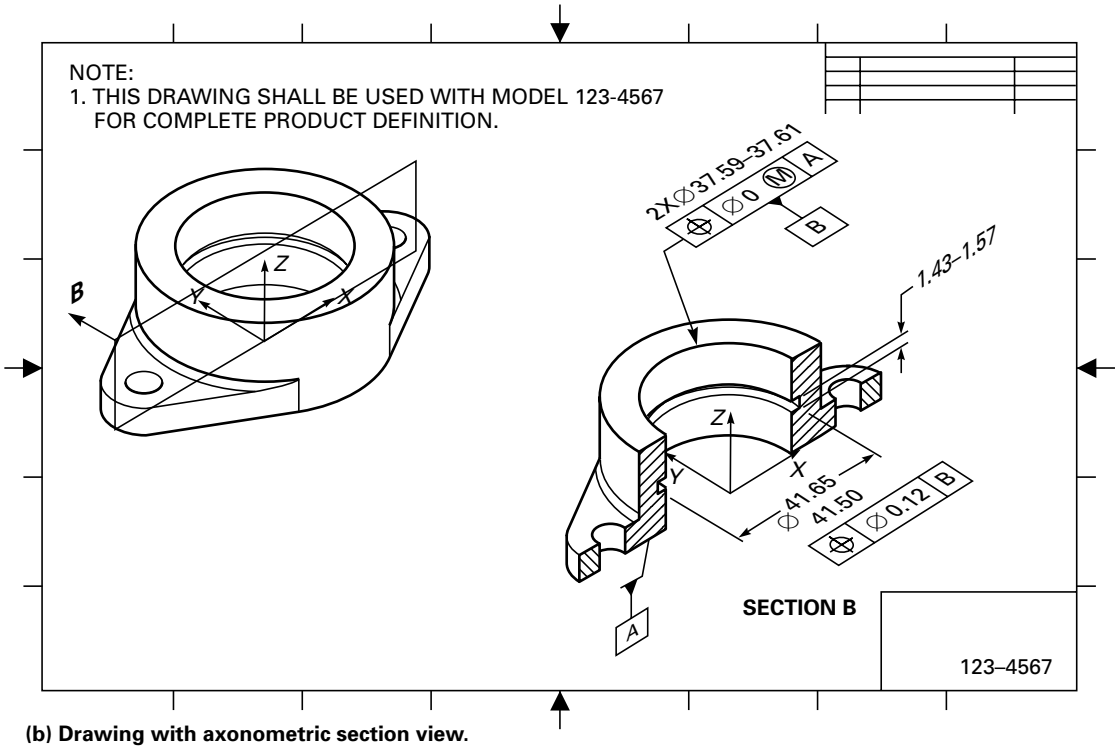

(b) Drawing with axonometric section view.

5.3.2(a)
5.3.2(b)(1)
5.3.2(b)(2)

Fig. 5-13 Axonometric Views

Copyright ASME International
Provided by IHS under license with ASME
No reproduction or networking permitted without license from IHS
Not for Resale

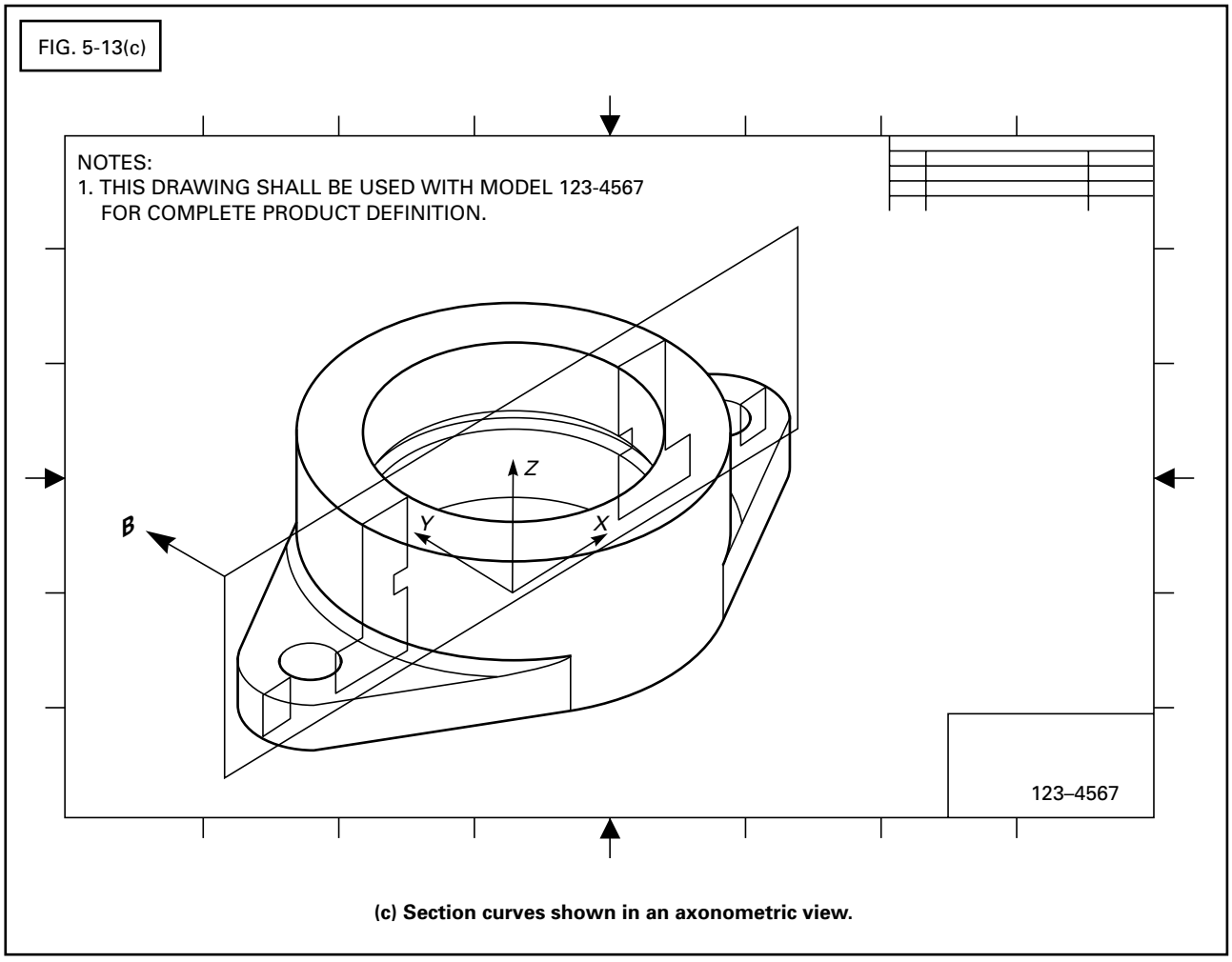

Fig. 5-13 Axonometric Views (Cont'd)

(6) Foreshortened and Aligned Features. Features may be shown in their actual position, without foreshortening or alignment, when the section is made from an axonometric view.

(7) Rotation of Features. Features may be shown in their actual location when shown in a section view cut from an axonometric view.

6 NOTES AND SPECIAL NOTATIONS

This Section establishes requirements for the application of notes and special notations used with a model, a drawing, or a combination of both.

6.1 Common Requirements

There are no common requirements for notes and special notations.

6.2 Model Requirements

The following paragraphs describe requirements for models.

6.2.1 Notes Area Annotation Plane. When general notes, flagnotes, and special notations are placed in a model, they shall be placed on a single annotation plane that does not rotate with the model. This annotation plane shall be available for display with the annotated model.

6.2.2 General Notes. General notes do not require associativity. General notes may include default tolerance(s) for the entire model.

6.2.3 Local Notes. Local notes shall be associative to the applicable digital elements in the model.

6.2.4 Flagnotes. When a flagnote is placed in a model, the following shall apply.

(a) The flagnote symbol, note number, and text shall be placed on the notes area annotation plane.

(b) The flagnote symbol, note number and text shall be associative to the digital elements to which it applies.

(c) The flagnote symbol and note number shall be shown adjacent to the applicable digital elements in the model.

Copyright ASME International
Provided by IHS under license with ASME
No reproduction or networking permitted without license from IHS Not for Resale

Table 7-1 Resolved Dimension Examples

ASME Y14.5	ASME Y14.41 Model Value [Note (3)]	ASME Y14.41 Resolved Dimension	Application Example
Basic [Note (1)]	88.4100000...	88.4	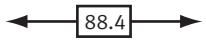
Size [Note (2)]	7.0000000...	7.0	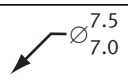
Linear	19.6666666...	19.67	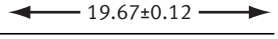
Radial	3.1500000...	3.2	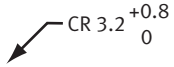
Angular	28.5918273...	28.6	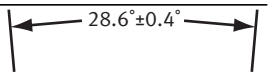
Single Limit [Note (1)]	12.0000000	12	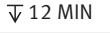
Reference [Note (1)]	21.6018043	21.6	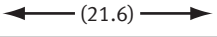

GENERAL NOTE: Table referenced in paras. 3.1.1(b)(3) and 7.1.1.

NOTES:

(1) Linear, radial, angular, diametral, or spherical diameter.

(2) Linear, diametral or spherical diameter.

(3) The values shown are examples. Actual values will reflect the defined precision of the model and the rounding requirements of each particular application.

(d) The flagnote symbol and note number shown adjacent to the digital elements in the model shall rotate with the model.

6.2.5 Special Notations. When special notations, as defined in ASME Y14.100, are placed in a model, the following shall apply:

(a) When the special notations are applicable to the entire model, the notation shall be placed on the notes area annotation plane.

(b) When the special notations are applicable only to a portion of a model, the special notations symbol and its associated text shall be placed on the notes area.

(c) Annotation plane in accordance with para. 6.2.1. The special notations symbol shall be shown adjacent to the applicable digital elements in the model. The special notation symbol shall be associative to the digital elements to which it applies.

6.3 Drawing Requirements

The following paragraph describes requirements for drawings.

6.3.1 Local Notes in Axonometric Views. The local note shall have a leader line(s) that clearly indicates the feature(s) that is related to the note.

7 MODEL VALUES AND DIMENSIONS

This Section establishes the requirements for model value query, and resolved, basic, size, and limit dimensions in a data set. This Section also contains the common requirements for associativity and dimensions on a model or drawing. Linear, radial, and angular dimensions are addressed in Section 8.

7.1 Common Requirements

The following paragraphs address requirements for model values and resolved dimensions. Model values are obtained for one of the following purposes:

(a) To determine the location and orientation of surfaces.

(b) To determine the distance or angle between two surfaces.

(c) To determine the position (basic location and orientation) of features of size.

(d) To determine the feature relation (the basic hole-to-hole spacing and orientation) dimensions within a pattern of features of size.

(e) To determine the shape (curvature) of surfaces.

(f) To determine the size value for a feature of size or a pattern of features of size. Model value queries (a) through (d) shall always be conducted in relation to the absolute or a user defined model coordinate system of the design model. For queries (e) and (f), direct interrogation of the model surface or feature of size is usually conducted.

7.1.1 Resolved Dimensions. Dimensions displayed on a model are resolved dimensions. For examples of resolving model values to displayed dimensions, see

Copyright ASME International
Provided by IHS under license with ASME
No reproduction or networking permitted without license from IHS Not for Resale

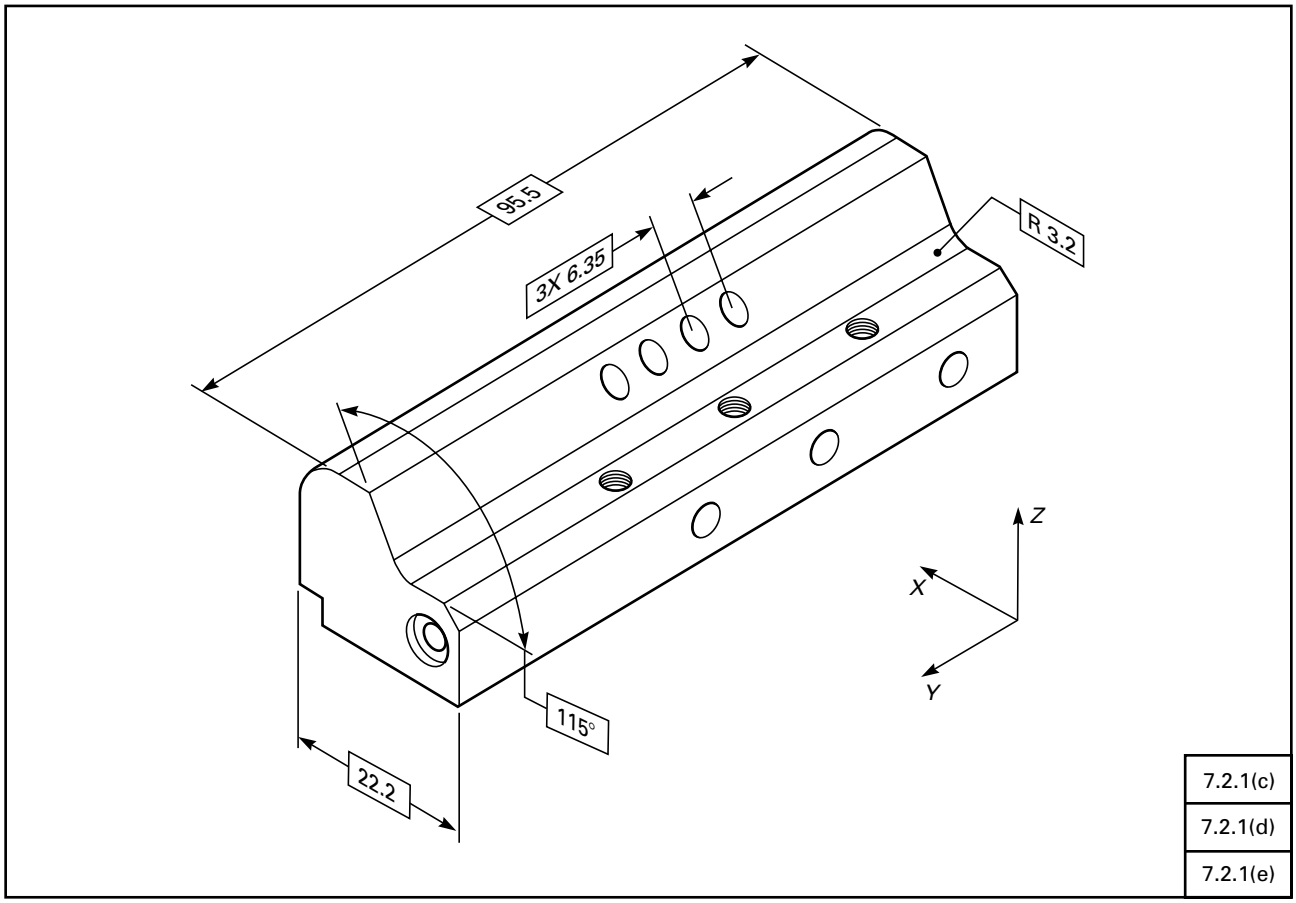

Fig. 7-1 Placement and Attachment of Basic Dimensions

Table 7-1. The requirements for resolved dimensions follow.

(a) To obtain a resolved dimension, a model value shall be rounded to the number of decimal places required for the design.

(b) All resolved dimensions shall be absolute values in accordance with ASME Y14.5M.

(c) Rounding shall be in accordance with IEEE/ASTM SI 10.

(d) Resolved Dimension Preservation and Association. A direct and permanent association to the originating model value shall be established and maintained for every resolved dimension.

(e) Utilization of Model or Resolved Dimensions. The use of model values or resolved dimensions for analyses and other processes shall be defined in appropriate documentation.

7.2 Model Requirements

Requirements for attaching and displaying basic and size dimensions on a model are defined in the following paragraphs. Linear, radial, and angular dimensions are addressed in Section 8.

7.2.1 Basic Dimensions. Queried model values shall be interpreted as basic dimensions unless superseded by a toleranced dimension or defined as a reference dimension. See para. 3.1.1(a)(9).

(a) Basic Dimensions. Querying of the model for the profile, location, and orientation of a feature shall occur within the appropriate model coordinate system. See paras. 7.1 and 9.2.1(a).

(b) Displaying Basic Dimensions. The display of basic dimensions may be necessary in defining some model relationships. This is applicable to the location of datum targets, an inclined datum feature, and features that may appear to be ninety degrees but the actual model angle is other than ninety. Displayed basic dimensions shall be enclosed in a box in accordance with ASME Y14.5M.

(c) Placement. Basic dimensions should be placed in annotation planes that are parallel with one of the planes of the absolute or a user-defined model coordinate system. An example of an exception is the 3X 6.35 basic dimension shown in Fig. 7-1.

(d) Attachment to Surface Features. Basic dimensions defining surface curvature or extent, such as fillets,

Copyright ASME International
Provided by IHS under license with ASME
No reproduction or networking permitted without license from IHS Not for Resale

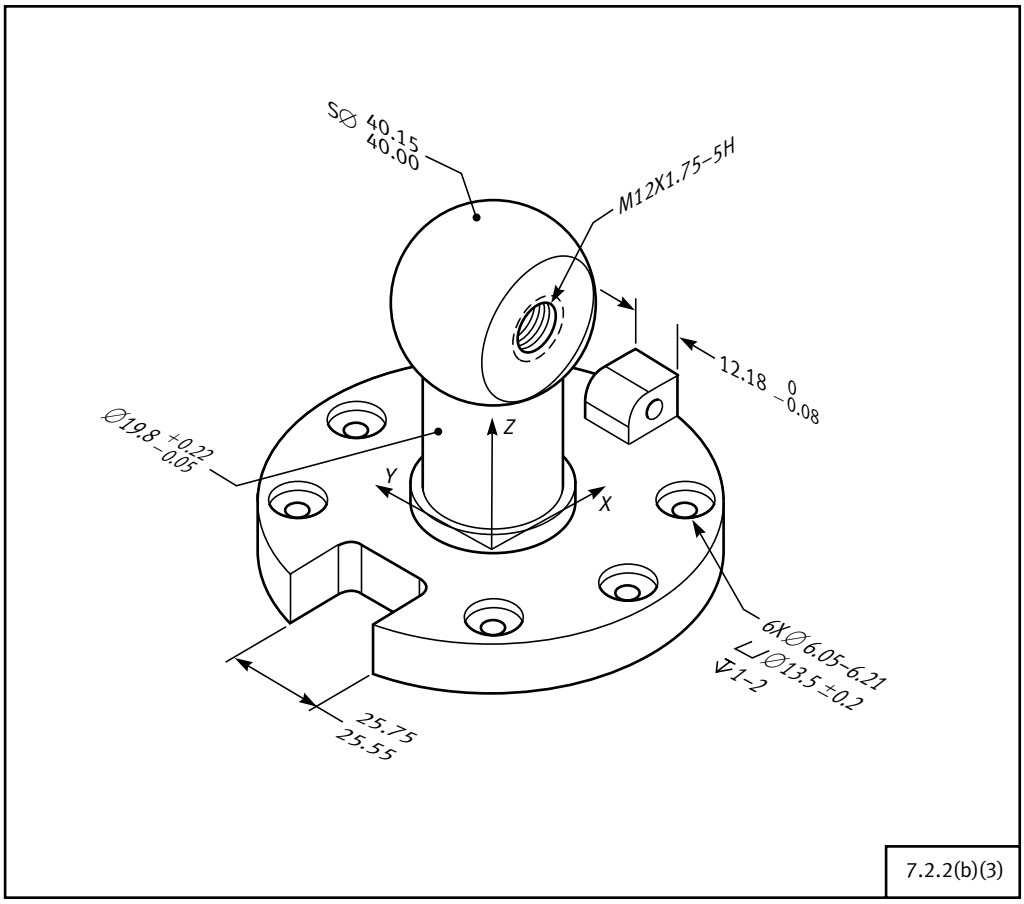

Fig. 7-2 Placement and Attachment of Size Dimensions

rounds, or chamfers, shall be directed to the feature surface by a leader. See Fig. 7-1.

(e) Attachment with Dimension and Extension Lines. Basic dimensions defining linear distance or angular relation are shown using dimension and extension lines. See Fig. 7-1.

NOTE: The use of a rectangular coordinate tabulation chart for basic dimensions can reduce or eliminate the need for dimension and extension lines. See ASME Y14.5 for examples.

7.2.2 Size Dimensions. A displayed feature of size dimension shall always include a tolerance.

(a) Size Dimension and Model Agreement. A size dimension shall agree with the queried model value for the same feature when the model value is rounded to the same number of decimal places. This agreement shall meet one of the following requirements, depending on the tolerance expression used.

(1) Bilateral or Unilateral Tolerance. The displayed size dimension shall equal the resolved model value.

(2) Limit Dimensions. The resolved model value may equal one of the limit dimensions, or be any value within the displayed range of limits.

(b) Placement and Attachment. The placement and attachment methods for size dimensions are as follows.

(1) Spherical Surface. The size dimension and leader shall be placed on an annotation plane containing the feature centerpoint.

(2) Cylindrical Surface. The size dimension and leader shall be placed on an annotation plane perpendicular to the feature axis or containing the feature axis.

(3) Set of Two Opposed Parallel Surfaces (a width). The size dimension, dimension, and extension lines shall be placed on an annotation plane perpendicular to or containing the feature center plane. The extension lines shall clearly indicate the surfaces comprising the width. See Fig. 7-2 for examples.

7.3 Drawing Requirements

Basic dimensions not displayed on a drawing shall be obtained by querying of the model.

7.3.1 Presentation of Dimensions in Axonometric Views. Requirements for dimensions on axonometric views of a drawing are defined in the following paragraphs.

Copyright ASME International
Provided by IHS under license with ASME
No reproduction or networking permitted without license from IHS Not for Resale

Table 8-1 Plus and Minus Tolerance Applications

General Applications	Attachment Technique: Size Callout	Attachment Technique: Directed Leader	Attachment Technique: Extension Lines	Paragraph	Figure
Fillets, Rounds, Chamfers	...	●	...	8.2.1	8-1
Reliefs, Step Surfaces	...	...	●	...	8-2
Countersinks	●	...	...	...	8-3(a)
Oblique Surfaces	...	...	●	...	8-3(b)
Entry Depth and Spotface	●	...	...	8.2.2	8-4(a)(b)
Remaining Thickness	...	...	●	8.2.2	8-4(c)
Notches, Flats, and Pin Height	...	...	●	...	8-5

GENERAL NOTE: Table referenced in paras. 8.2 and 8.2.1.

(a) Displayed Dimensions. Axonometric views are true dimensions. Dimensions shown in an axonometric view shall be actual values.

(b) Displayed Basic Dimensions. Basic dimensions shall be enclosed in a box in accordance with ASME Y14.5M.

(c) Dimension Leader Lines. Leader lines shall be used to relate a dimension to a cylindrical feature. The leader line shall be directed to the intersection of the cylindrical feature and a surface. Leader lines shall terminate with an arrowhead.

8 PLUS AND MINUS TOLERANCES

This Section establishes the placement, attachment, and display requirements for plus and minus tolerances in a data set.

8.1 Common Requirements

One or more general notes defining plus and minus tolerances may be specified.

8.2 Model Requirements

Table 8-1 lists general applications for plus and minus tolerance of linear, radial, and angular dimensions. The attachment method generally used is shown.

NOTE: The features listed in Table 8-1 do not comprise an exhaustive list, and define requirements that are applicable to similar and other valid applications. The omission of a particular application is not cause to consider the application invalid.

8.2.1 Chamfers. Attachment for 90 deg surface intersections with an equally disposed chamfer is indicated in Table 8-1. Oblique surface intersections, unequally disposed extents, or chamfers defined using a linear and angular dimension require the use of dimension and extension lines. See Figs. 8-1(d) and (e). The value shall be located and oriented in a manner that is clear.

8.2.2 Depth Specification. When a feature depth is governed by a remaining thickness tolerance, the feature tolerance and the remaining thickness requirement should be an associated group. See Fig. 8-4(c).

8.3 Drawing Requirements

Use existing drawing standards for plus and minus tolerances. See para. 1.2.

9 DATUM APPLICATIONS

This Section establishes practices for organizing, attaching, and displaying datum feature symbols, datum targets, and related information associative with models. Requirements and recommendations for correlating datum features to the coordinate axes of the model space are given.

9.1 Common Requirements

There are no exceptions or additions to existing standards that are common for datum applications. See para. 1.2.

9.2 Model Requirements

The following paragraphs describe requirements applicable to models.

9.2.1 Datum Reference Frames and Model Coordinate Systems. The following requirements apply to the relationship between the datum reference frames on the model and the model coordinate systems.

(a) Datum Reference Frame and Coordinate System Correspondence. Each datum reference frame shall be associated to a corresponding model coordinate system.

(b) Datum Reference Frame and Coordinate System Associativity. A definite visual relationship between any datum reference frame and the corresponding coordinate system shall be preserved throughout navigation and interrogation of the presented design data.

(c) Multiple Datum Reference Frame and Coordinate Systems Relationship. When more than one datum reference frame is imposed upon a model, each distinguished datum reference frame-to-coordinate system relationship shall be clearly presented and maintained. See Figs. 9-1(a), (b), and (c) for an example of multiple datum reference frames and coordinate systems organized in a single design presentation.

Copyright ASME International
Provided by IHS under license with ASME
No reproduction or networking permitted without license from IHS
Not for Resale

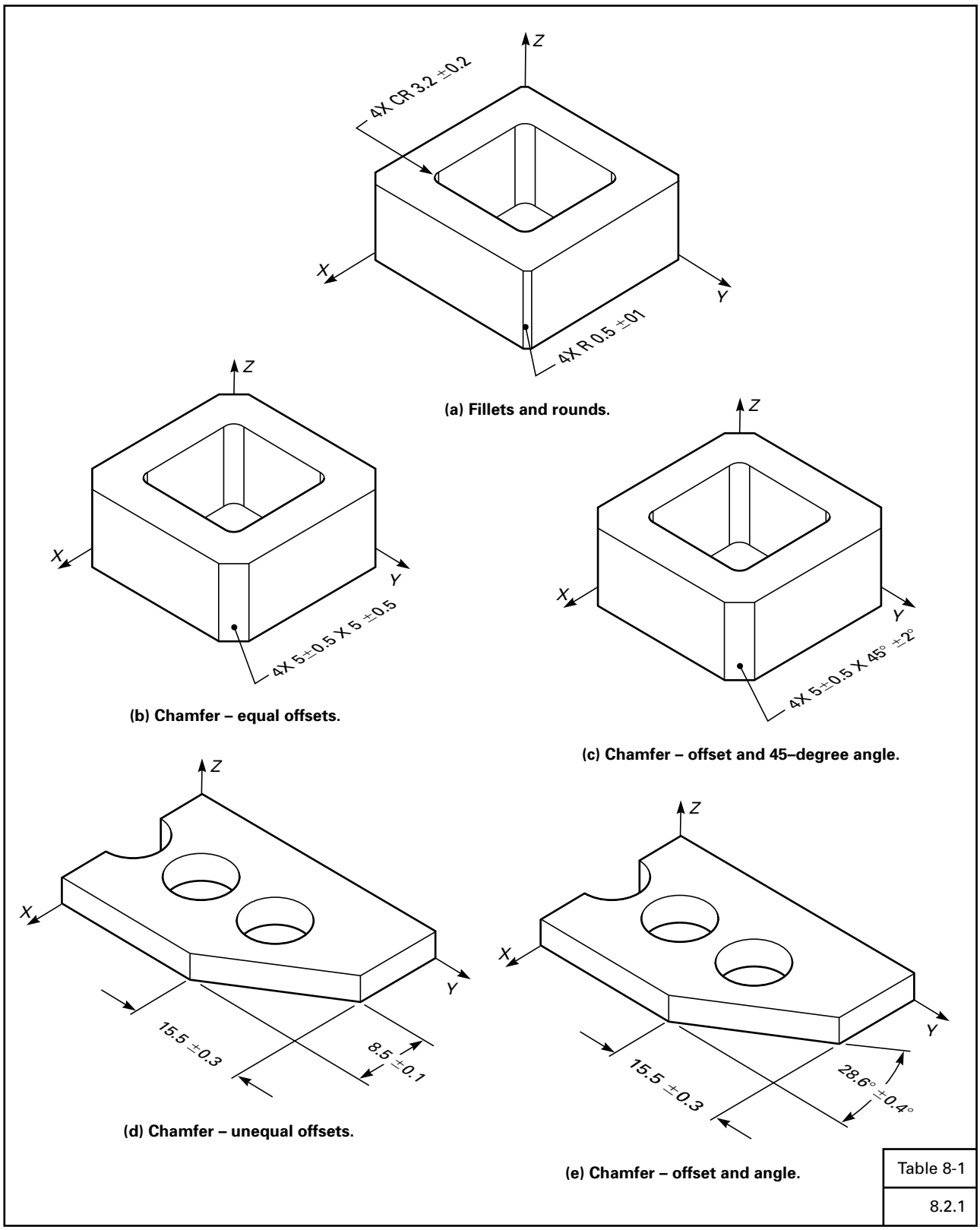

Fig. 8-1 Attachment Techniques: Fillets, Rounds, and Chamfers

Copyright ASME International
Provided by IHS under license with ASME
No reproduction or networking permitted without license from IHS
Not for Resale

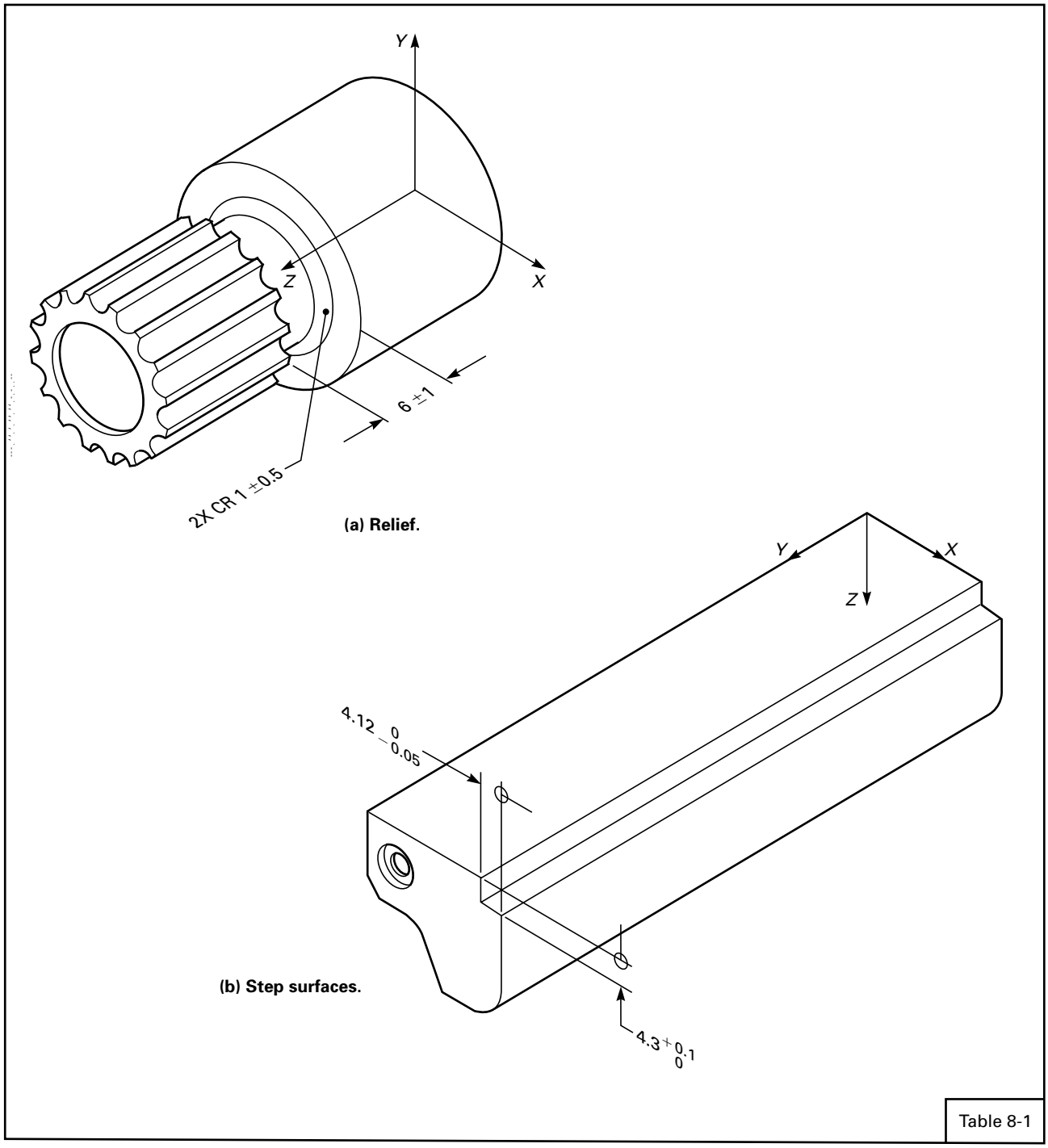

Fig. 8-2 Attachment Techniques: Reliefs and Step Surfaces

Copyright ASME International
Provided by IHS under license with ASME
No reproduction or networking permitted without license from IHS Not for Resale

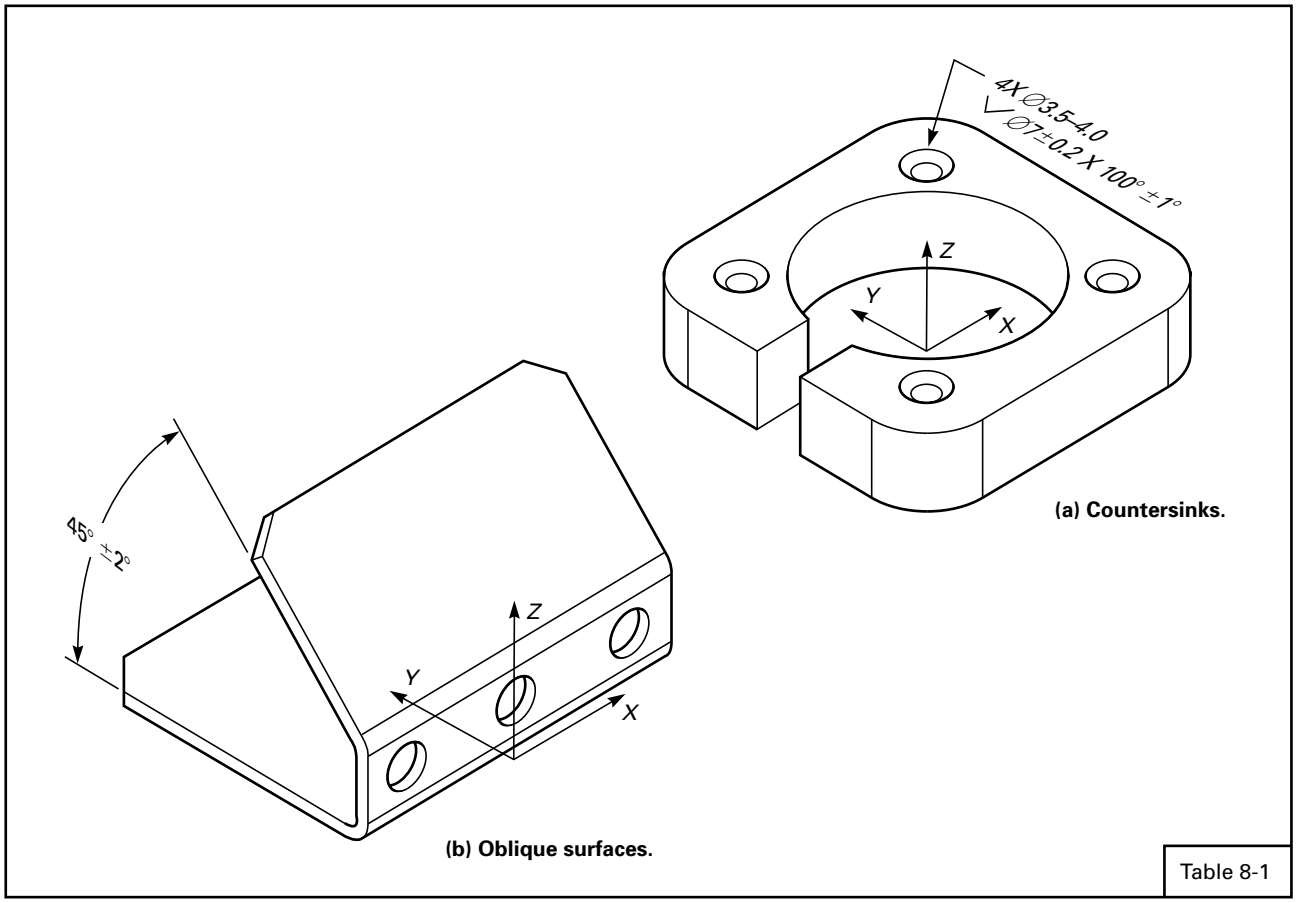

(a) Countersinks.

(b) Oblique surfaces.

Table 8-1

Fig. 8-3 Attachment Techniques: Countersinks and Oblique Surfaces

9.2.2 Identification of Datum Features. The following paragraphs describe requirements for identification of datum features on models.

(a) Identification of Datum Features. Fig. 9-2 demonstrates symbol attachment methods for identifying the datum features of a model. The datum feature symbol should be attached to the surface representing the datum feature. Single extension lines of feature outlines should not be used for attachment of datum feature symbols. Particular requirements and the preferred methods governing each of the four fundamental datum feature types are given in the following paragraphs.

(1) Identification of a Planar Surface Datum. The datum feature symbol is placed on an annotation plane perpendicular to the surface with the leader attached, terminating in a triangle. See datum D in Fig. 9-2(a).

(2) Identification of a Spherical Surface Datum. The datum feature symbol is attached as shown to the size limits imposed upon the feature. See datum F in Fig. 9-2(a).

(3) Identification of a Cylindrical Surface Datum. The datum feature symbol is attached as shown to the size limits imposed upon the feature. See datum B and datum G in Fig. 9-2(a).

(4) Identification of a Set of Two Opposed, Parallel Planes (a width). The datum feature symbol and the dimension and extension lines are placed on an annotation plane perpendicular to the width centerplane. The size limits shall be organized and displayed similarly as shown. See datum C and datum E in Fig. 9-2(a).

(5) Identification of Limited Area Application. When the surface containing a datum feature also contains an area of limited application of a geometric tolerance, the limited area of application is represented on the model using supplemental geometry. See Fig. 9-3.

(b) Associativity of Datum Features and Design Data. A query of any datum feature of the model shall permit access to all relevant information for the datum feature. This includes the datum feature symbol, the size limits (if applicable), any applied geometric tolerance, and the relevant coordinate system.

9.2.3 Datum Target Identification and Attachment. The following paragraphs describe the requirements for attaching, associating, and displaying datum targets on models.

(a) V-Type Equalizers. When the design requires the use of V-type equalizers, the display presentation

Copyright ASME International
Provided by IHS under license with ASME
No reproduction or networking permitted without license from IHS Not for Resale

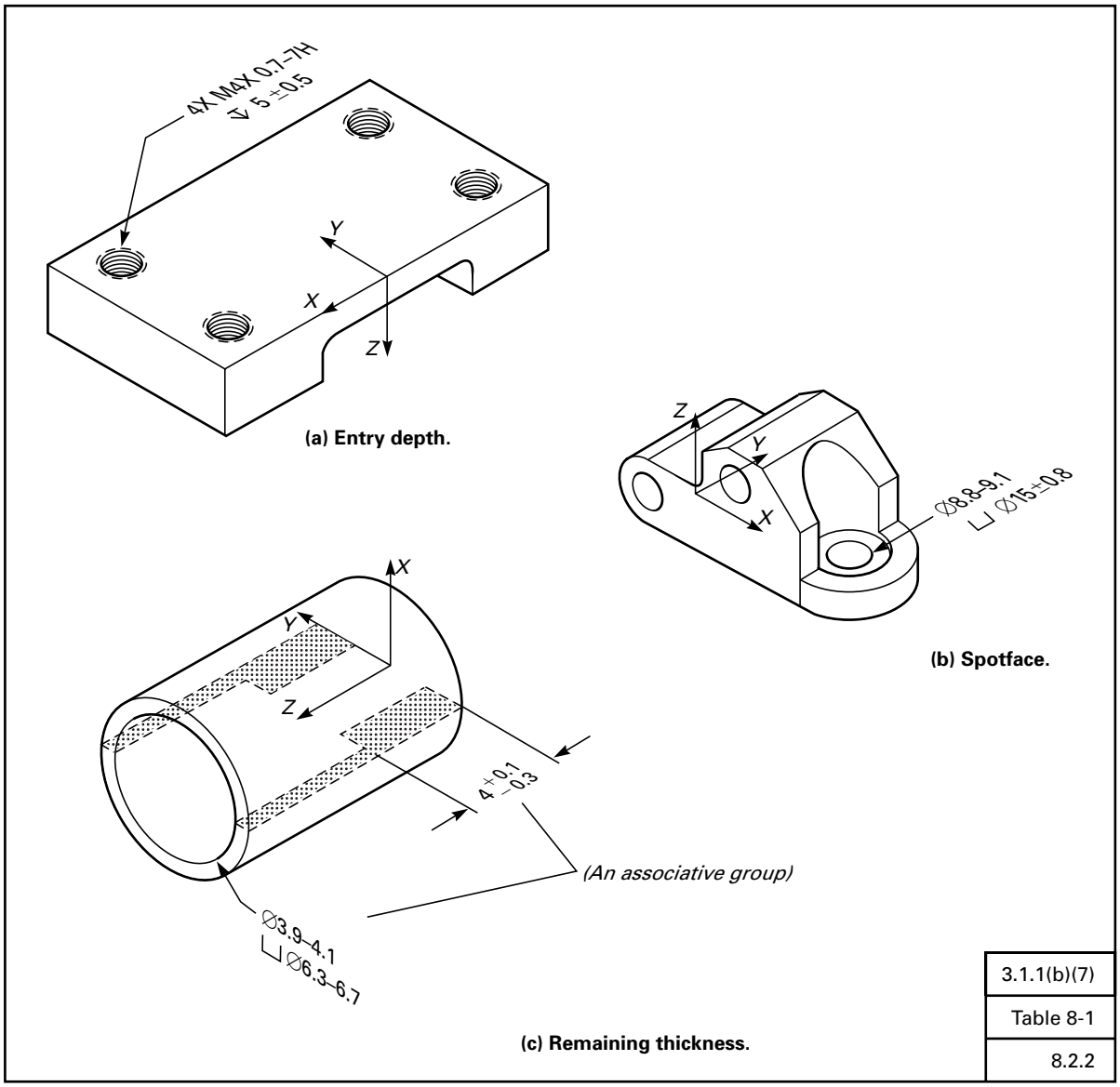

Fig. 8-4 Attachment Techniques: Depth, Spotface, Remaining, Thickness

method of Fig. 9-4(a) is created. The V-type equalizers are represented by supplemental geometry tangent to the cylindrical datum feature, and the leader of a datum target symbol is attached.

(b) Movable Datum Targets. When a datum target does not have a fixed location, the target may be represented as supplemental geometry. The movable target symbol of ASME Y14.8M shall be attached. See Fig. 9-4(b). The direction of movement shall be indicated.

(c) Establishing Datum Axis Targets on a Single Interior Cylindrical Surface. A primary datum axis in Fig. 9-5 is established by two sets of three equally spaced target points.

(d) Establishing Datum Axis Targets on Two Exterior Cylindrical Surfaces. The primary datum axis in Fig. 9-6(a) is established by targets on two cylindrical datum features. The target for datum A is a cylindrical area, and the targets for datum B are three equally spaced points.

(e) Establishing a Circular Datum Target Line on a Cylindrical Surface. When the designated target for a cylindrical datum feature is a circular line, the display and attachment method shown in Fig. 9-6(b) is employed, using supplemental geometry to represent the circular datum target line.

(f) Distinguishing Datum Target Areas. Datum target areas shall be shown using shading or crosshatching.

9.2.4 Multiple Features Establishing a Datum. When two or more features are combined to establish a datum,

Copyright ASME International
Provided by IHS under license with ASME
No reproduction or networking permitted without license from IHS Not for Resale

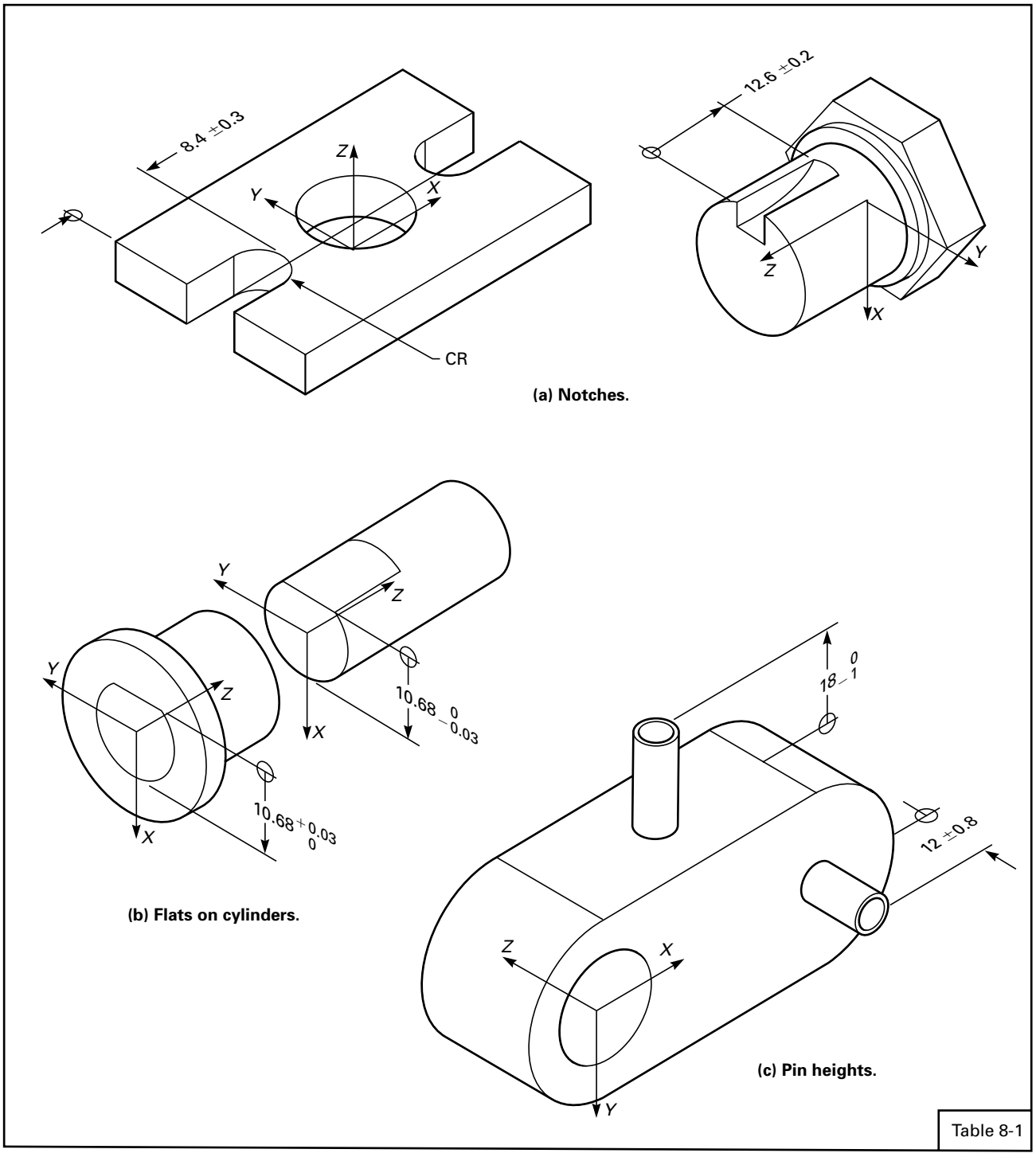

Fig. 8-5 Attachment Techniques: Notches, Flats, and PIN Heights

Copyright ASME International
Provided by IHS under license with ASME
No reproduction or networking permitted without license from IHS
Not for Resale

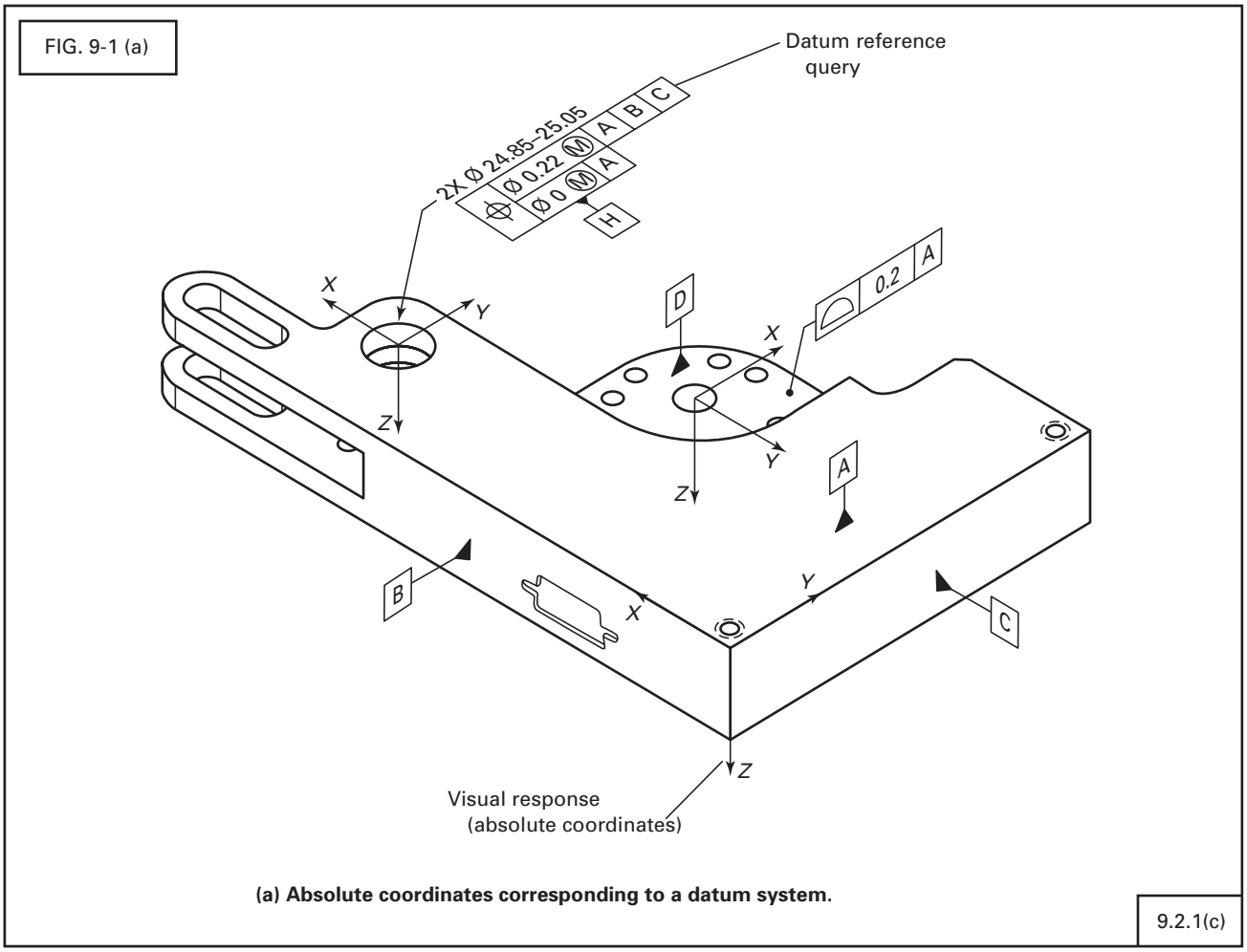

Fig. 9-1 Datum System and Coordinates Relationship

associativity shall be established in the design presentation. For several common instances, the following display and associativity requirements apply.

(a) A Pattern of Features Establishing a Datum Axis. When a pattern of features of size is used to establish a datum axis, the involved features of the model and any applied tolerance for these features shall be organized as an associated group. See Fig. 9-7.

(b) Two Coaxial Cylinders Establishing a Single Datum Axis. When two coaxial and cylindrical datum features are used to establish a single, common datum axis, the involved features of the model and any applied tolerance for these features shall be organized as an associated group. See Fig. 9-8.

(c) Co-planar Surfaces Establishing a Datum Plane. When two or more coplanar surface features are used to establish a datum plane, the involved model surfaces and any applied tolerance for these surfaces shall be organized as an associated group. See Fig. 9-9. When an intervening feature separates the surfaces being toleranced, the profile tolerance shall be attached to one of the surfaces but not both. See Fig. 9-10.

9.3 Drawing Requirements

Datum features in axonometric views shall be indicated as follows.

(a) Datum Reference Frame and Model Coordinate System Correspondence. The corresponding model coordinate system shall be displayed in each axonometric view in which a datum reference frame is cited.

(b) Identification of Datum Features in Axonometric Views. The following paragraphs describe requirements for identification of datum features in axonometric views:

(1) The datum feature symbol should be attached to the model surface representing the datum feature. A single extension line of a feature of the model outline

Copyright ASME International
Provided by IHS under license with ASME
No reproduction or networking permitted without license from IHS
Not for Resale

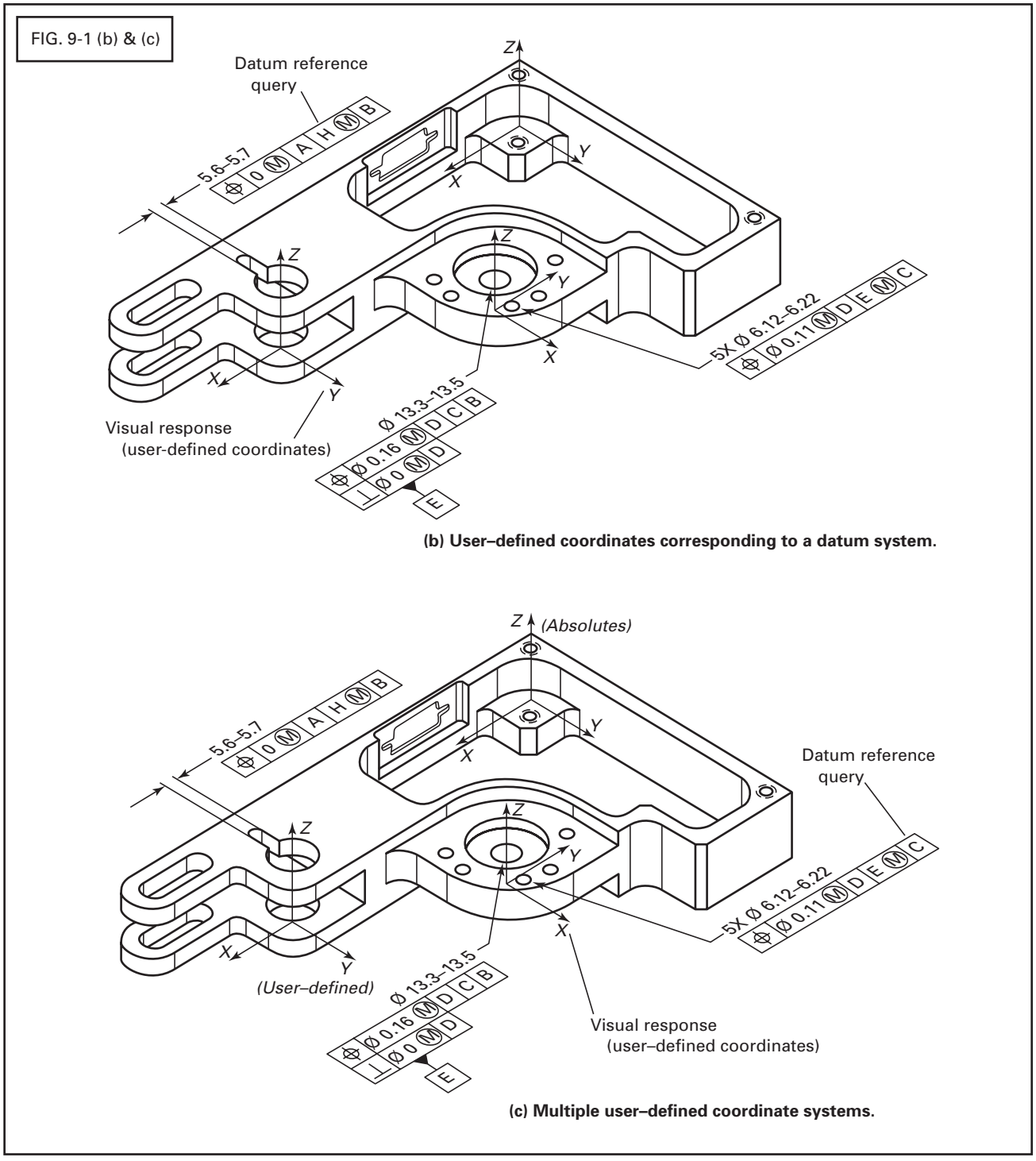

Fig. 9-1 Datum System and Coordinates Relationship (Cont'd)

Copyright ASME International
Provided by IHS under license with ASME
No reproduction or networking permitted without license from IHS
Not for Resale

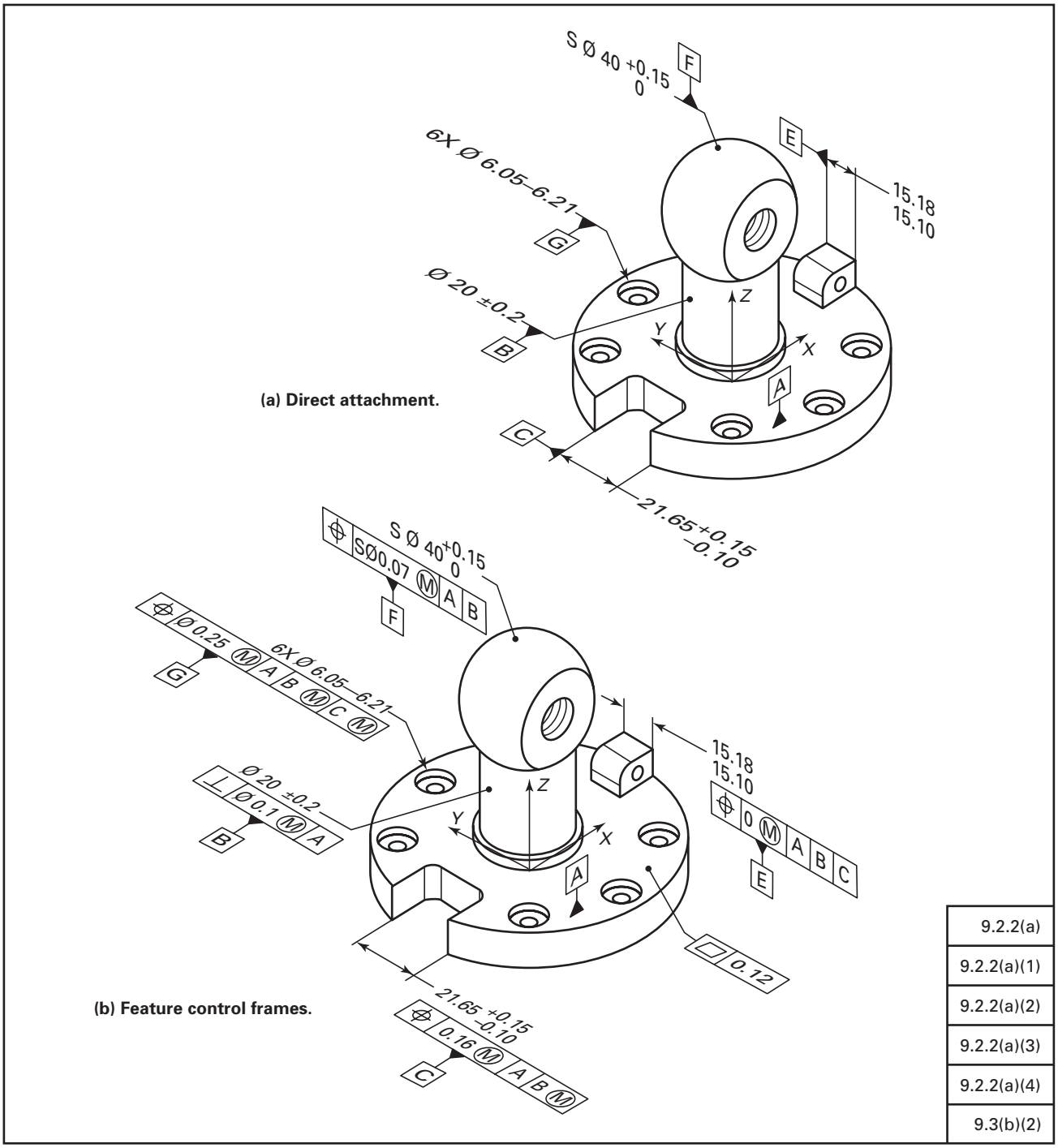

9.2.2(a)
9.2.2(a)(1)
9.2.2(a)(2)
9.2.2(a)(3)
9.2.2(a)(4)
9.3(b)(2)

Fig. 9-2 Datum Feature Symbol Attachments

Copyright ASME International
Provided by IHS under license with ASME
No reproduction or networking permitted without license from IHS
Not for Resale

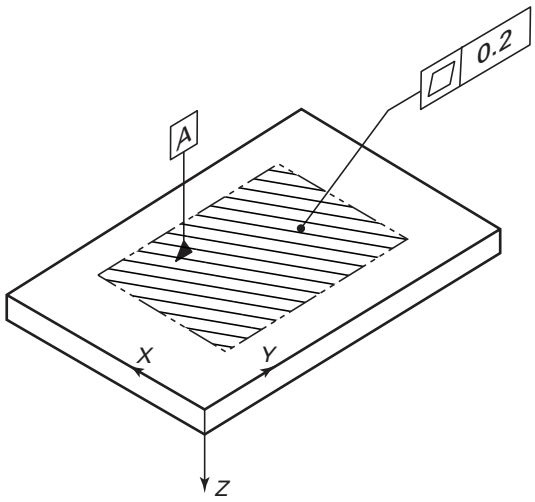

5.2.6
9.2.2(a)(5)
10.2.1(a)
Table 10-1

Fig. 9-3 Partial Surface as a Datum Feature

should not be used for attachment of datum feature symbols in an axonometric view.

(2) Datum feature symbols may be attached to the dimension for features of size when the feature is used to define a datum. See Fig. 9-2.

(c) V-Type Equalizers Using Axonometric Views. When the design requires the use of V-type equalizers, the display presentation method of Fig. 9-11(a) is created. The V-type equalizers are represented by supplemental geometry tangent to the cylindrical datum feature, and the leader of a datum target symbol is attached.

(d) Movable Datum Targets Using Axonometric Views. When a datum target does not have a fixed location, the target may be represented as supplemental geometry. The movable target symbol of ASME Y14.8M shall be attached. See Fig. 9-11(b). The direction of movement shall be indicated.

10 GEOMETRIC TOLERANCES

This Section establishes the placement, attachment, and display requirements for geometric tolerances.

10.1 Common Requirements

A general note defining a geometric tolerance may be specified. More than one tolerance may be specified.

10.2 Model Requirements

The following paragraphs address the placement, attachment, and display requirements for geometric tolerances associated with the features of a model.

10.2.1 Form Tolerances. The feature control frame shall be placed on an annotation plane parallel to, perpendicular to, or coincident with the surface to which it applies. See Fig. 10-1. Table 10-1 lists the form tolerances with the type of attachment method used when a single form tolerance is applied.

(a) Flatness, Limited Area Application. A limited area of application shall be represented on the model using supplemental geometry. The leader directed from the flatness feature control frame shall be attached within the represented area. See Fig. 9-3.

(b) Circularity Applied to a Sphere, Cylinder, Cone, or a Surface of Revolution. The feature control frame shall be placed on an annotation plane perpendicular to the feature of the model axis, or containing the center point of a sphere. See Fig. 10-2.

(c) Straightness Applied to the Line Elements of a Cylindrical or Conical Surface. The feature control frame shall be placed on an annotation plane containing the axis of the feature surface. See Fig. 10-6.

10.2.2 Orientation Tolerances. The orientation feature control frame shall be placed on an annotation plane parallel or perpendicular to the referenced primary datum. Table 10-2 lists the orientation tolerances with the attachment method used when an orientation tolerance is directly applied.

(a) Each Element Directed by Line Element. When using multiple datum references, the orientation feature control frame and the EACH ELEMENT qualifier shall be placed on an annotation plane containing the represented line element indicating the direction of application. See Fig. 10-9.

Copyright ASME International
Provided by IHS under license with ASME
No reproduction or networking permitted without license from IHS
Not for Resale

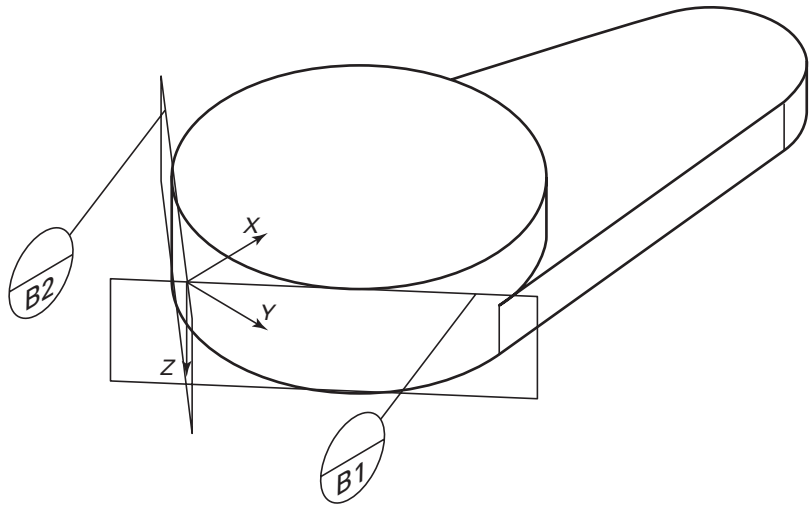

(a) V–type equalizer – datum target planes.

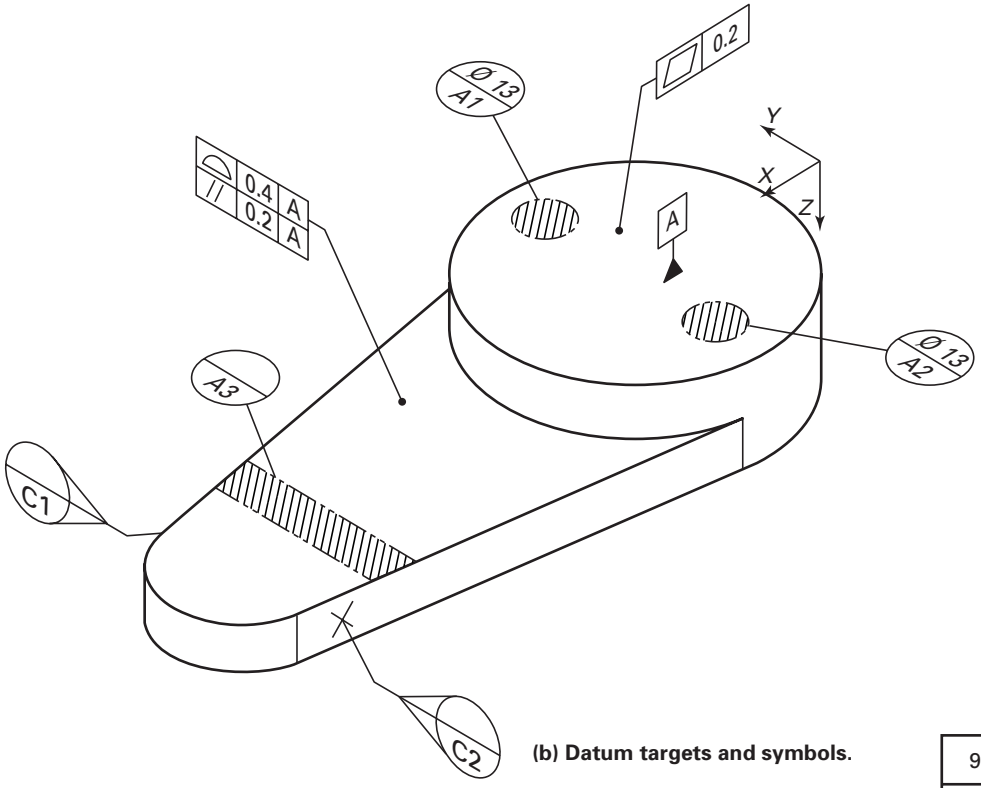

(b) Datum targets and symbols.

9.2.3(a)
9.2.3(b)

Fig. 9-4 Datum Targets and Symbols Attachment

Copyright ASME International
Provided by IHS under license with ASME
No reproduction or networking permitted without license from IHS Not for Resale

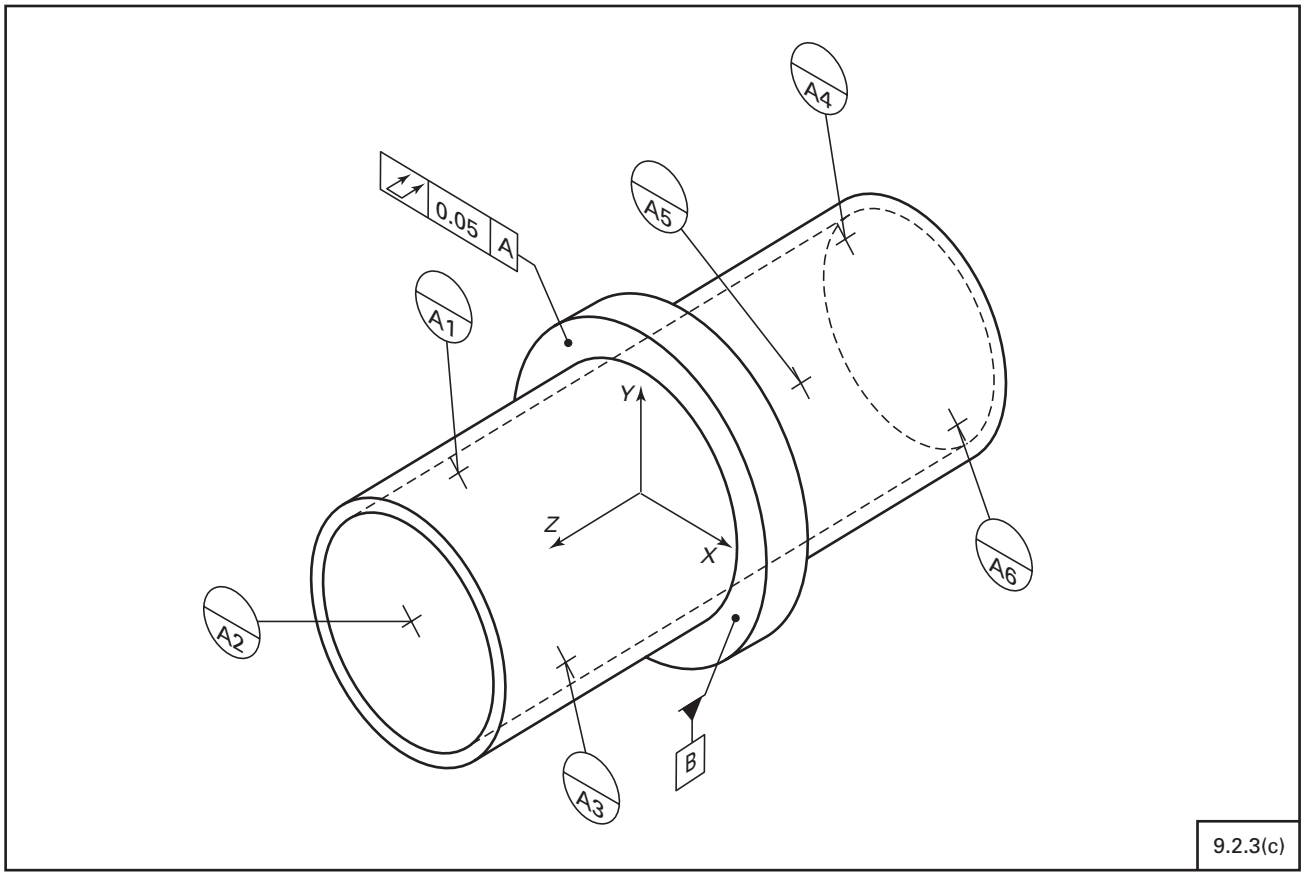

Fig. 9-5 Equalizing Target Points Establish a Datum Axis on an Internal Cylindrical Surface

(b) Each Element Directed by Ordinate Axis. The orientation feature control frame and the EACH ELEMENT qualifier shall be placed on an annotation plane parallel and perpendicular with the absolute coordinate system or an established user defined coordinate system. See Fig. 10-10.

(c) Orienting an Axis within a Parallel Planes Tolerance Zone. The orientation feature control frame shall be attached to the diametral size and any other geometric tolerance requirement. The orientation of the extension lines defines the orientation of the tolerance zone. See Fig. 10-13.

10.2.3 Profile Tolerances. When an individual profile requirement is specified, it shall be attached using a directed leader. Table 10-3 lists individual profile applications.

(a) Conical Surface or a Surface of Revolution. The feature control frame shall be placed on an annotation plane perpendicular to or containing the feature axis. See Fig. 10-14(b).

(b) Multiple or Co-Planar Surfaces. When a profile tolerance applies to multiple surfaces, the features of the model shall be combined into an associated group. The feature control frame shall be placed on an annotation plane parallel or perpendicular to the referenced primary datum. See Fig. 10-15.

(c) Between Basis. When the associated geometry is not sufficient to indicate the application, labeled supplemental geometry may be added to indicate the boundary of application. The between symbol may be used to clarify the requirement. See Fig. 10-16.

(d) All-Around Application. When the all-around symbol is used, query shall be used to identify the controlled surfaces. See Fig. 10-17.

(e) Unilaterally Disposed. When a profile tolerance is unilaterally disposed, a modifier shall be added to the feature control frame immediately following the tolerance value. A value shall be added after the modifier to show the amount of the tolerance zone outward from the surface. When the tolerance zone is outward, the value following the modifier will be identical to the tolerance value. When the tolerance zone is inward, the value following the modifier will be zero. See Fig 10-18 and Mandatory Appendix I.

(f) Unequally Disposed. When a profile tolerance is unequally disposed, a modifier shall be added to the feature control frame immediately following the tolerance value. A value shall be added after the modifier to

Copyright ASME International
Provided by IHS under license with ASME
No reproduction or networking permitted without license from IHS
Not for Resale

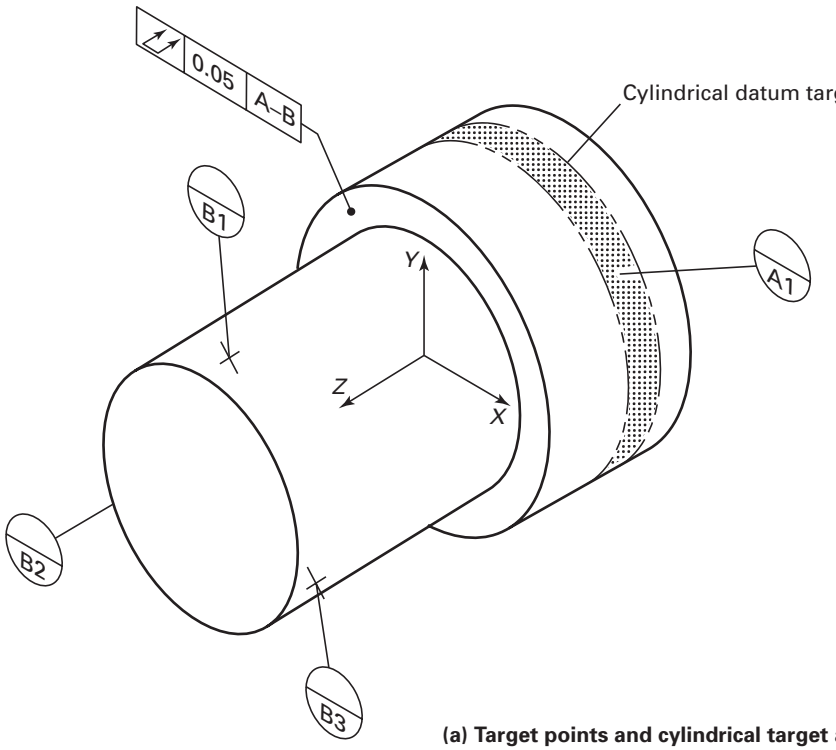

(a) Target points and cylindrical target area.

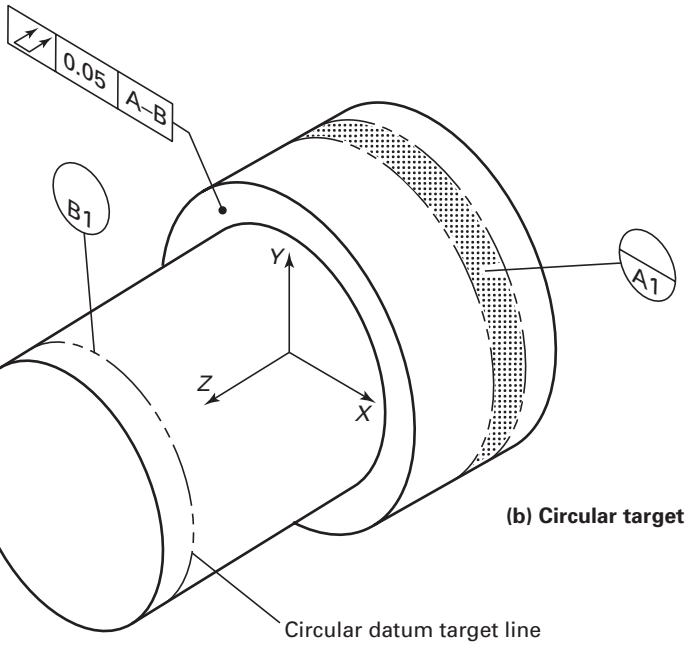

(b) Circular target line and cylindrical target area.

9.2.3(d)

9.2.3(e)

Fig. 9-6 Two Cylindrical Features Establish a Datum Axis

Copyright ASME International
Provided by IHS under license with ASME
No reproduction or networking permitted without license from IHS
Not for Resale

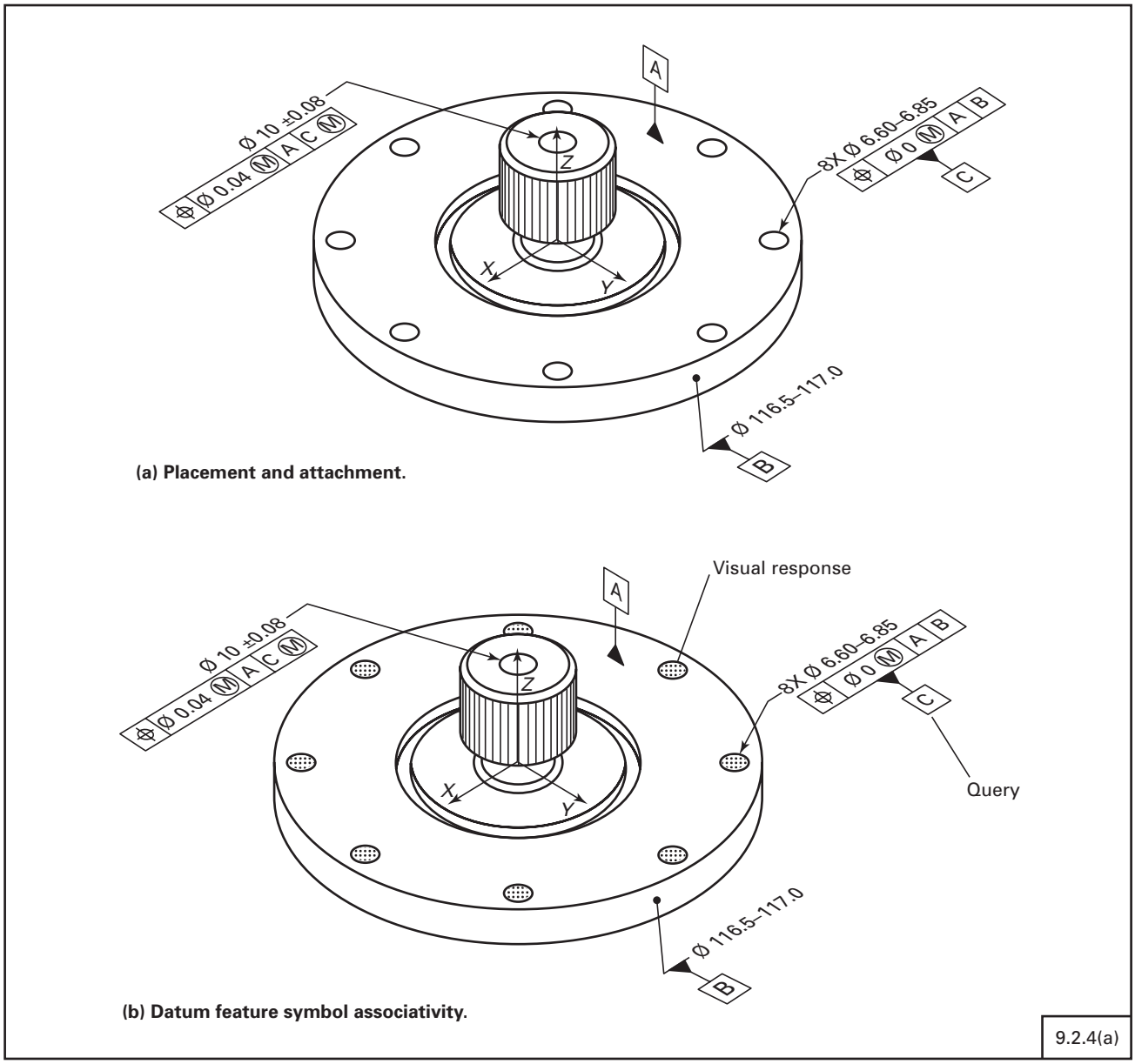

Fig. 9-7 Pattern of Features Establish a Datum Axis

show the amount of the tolerance zone outward from the surface. The remainder of the tolerance is inward. See Fig. 10-19 and Mandatory Appendix I.

(g) Profile of a Line Directed by Line Element. The feature control frame shall be placed on an annotation plane containing the represented line element, parallel and perpendicular to the absolute coordinate system or an established user-defined coordinate system. See Fig. 10-20.

(h) Profile of a Line Directed by Ordinate Axis. The feature control frame shall be placed on an annotation plane parallel and perpendicular to the absolute coordinate system or an established user-defined coordinate system. See Fig. 10-21.

10.2.4 Location Tolerances. The location feature control frame shall be placed on an annotation plane parallel or perpendicular to the referenced primary datum. Table 10-4 identifies location tolerance applications and the attachment method used.

(a) Positioning Feature Patterns Individually to Individual Datum Features. Each individual pattern of features of the model and the required individual datum feature of the model shall be collected as an associated group. A

Copyright ASME International
Provided by IHS under license with ASME
No reproduction or networking permitted without license from IHS
Not for Resale

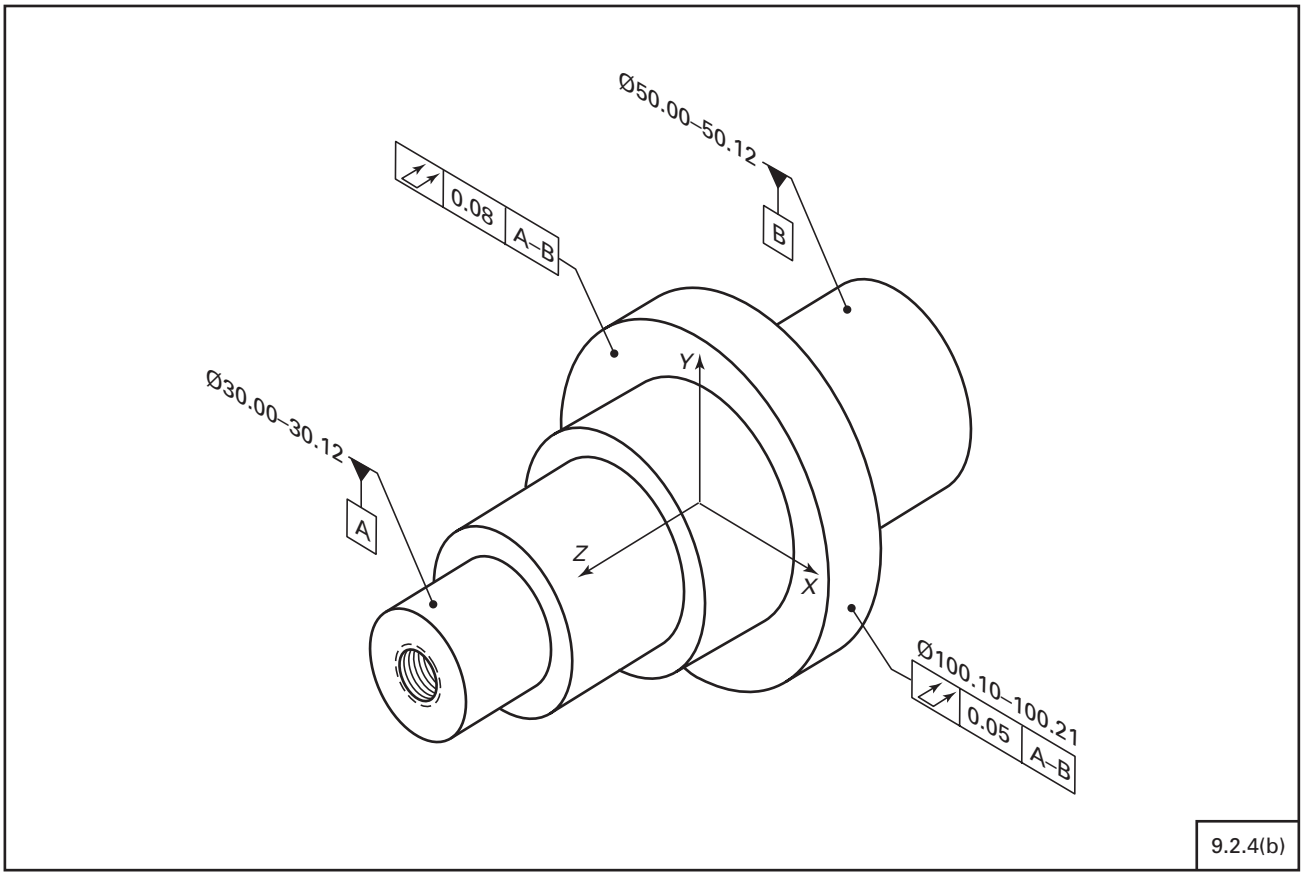

Fig. 9-8 Two Coaxial Features Establish a Datum Axis

model coordinate system representing each individual datum system shall be established. See Fig. 10-22.

(b) Projected Tolerance Zones. The leader for a position or orientation tolerance applied with a projected tolerance zone shall be directed to the surface from which the tolerance zone projects and terminate with an arrowhead. The feature control frame shall contain the projected tolerance zone symbol and the required projection value. The use of a chain line to indicate projected tolerance, as described in ASME Y14.5M, is not recommended. See Fig. 10-23.

(c) Closer Control at One End of a Feature. The size dimension and both feature control frames shall be collected as an associated group. For a conical tolerance zone, the leaders for the positional tolerances shall be directed to the surface to which it applies. See Fig. 10-24.

(d) Bi-Directional Positional Tolerancing for Polar and Rectangular Coordinates. The callouts specifying the bi-directional requirements shall be placed on the same annotation plane as the size specification for the feature. See Fig. 10-26.

(e) Combined Surface Profile and Position Tolerance for Non-Cylindrical Features. The profile and position feature control frames may be combined using one leader. The all-around symbol applies to the profile control, and the tolerance qualification note BOUNDARY applies to the position control. See Fig. 10-27.

10.2.5 Runout Tolerances. Table 10-5 lists runout applications and the attachment method generally used. Applications of circular runout to a spherical, conical, or revolved surface are also listed.

(a) Attachment Methods for Runout Tolerances. The use of multiple leader lines should be avoided when assigning runout tolerances. When the same runout control with the same tolerance value and datum reference(s) is applied to multiple features, one of the following methods may be used:

(1) Create a single runout feature control frame for all identically controlled surfaces, and associate it to all applicable model surfaces. A note indicating the number of surfaces to which the tolerance applies may be included for additional associativity emphasis. See Figs. 10-29(a) and (b).

(2) Define the geometric tolerance in a general note.

(3) Create and attach a separate runout feature control frame to each of the toleranced surfaces. See Fig. 10-29(c).

Copyright ASME International
Provided by IHS under license with ASME
No reproduction or networking permitted without license from IHS
Not for Resale

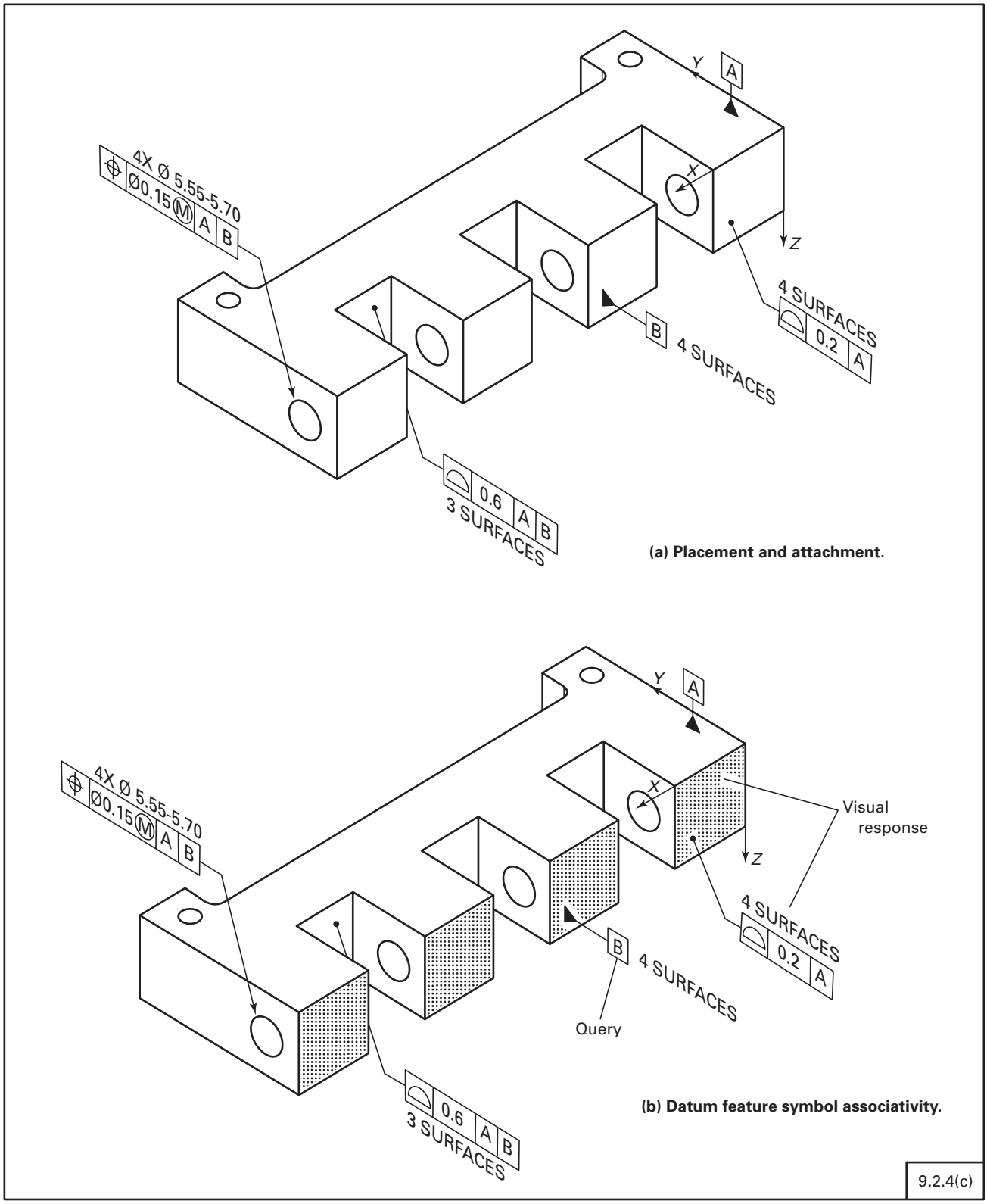

Fig. 9-9 Co-Planar Surfaces Establish a Datum Plane

Copyright ASME International
Provided by IHS under license with ASME
No reproduction or networking permitted without license from IHS
Not for Resale

FIG. 9-10 (a), (b), & (c)

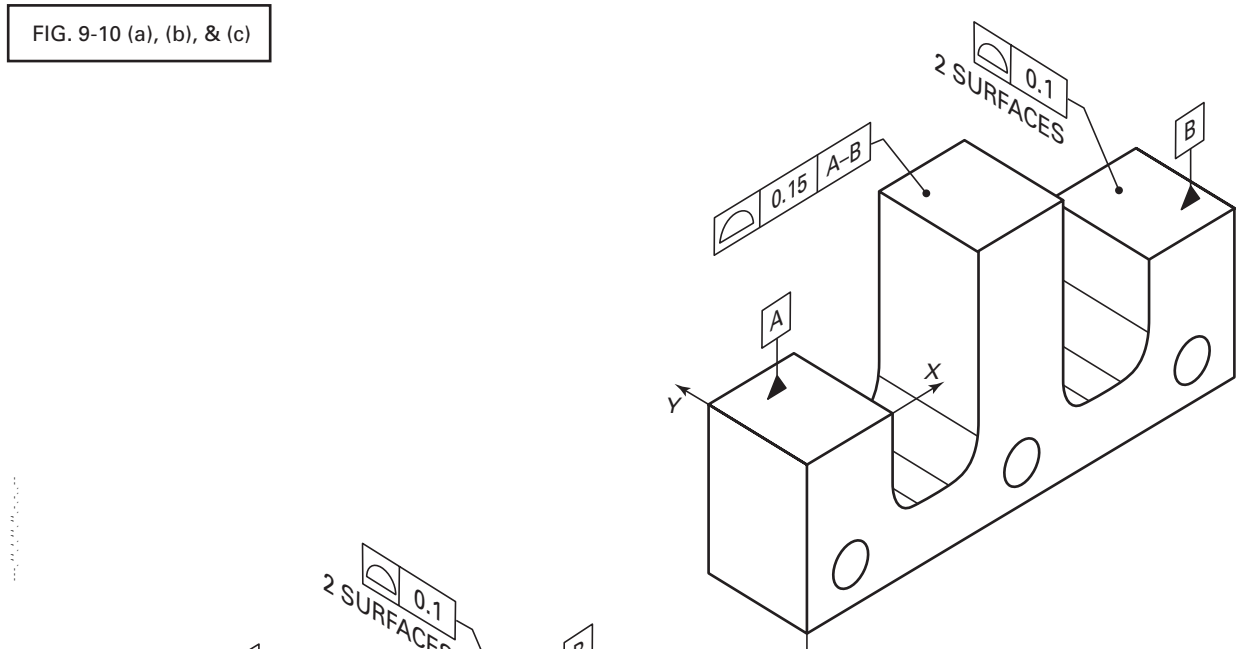

(a) Placement and attachment.

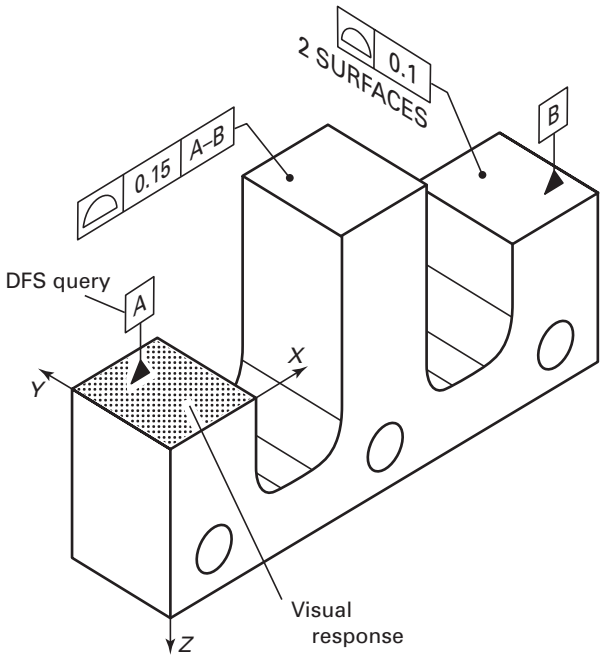

(b) Datum feature symbol associativity.

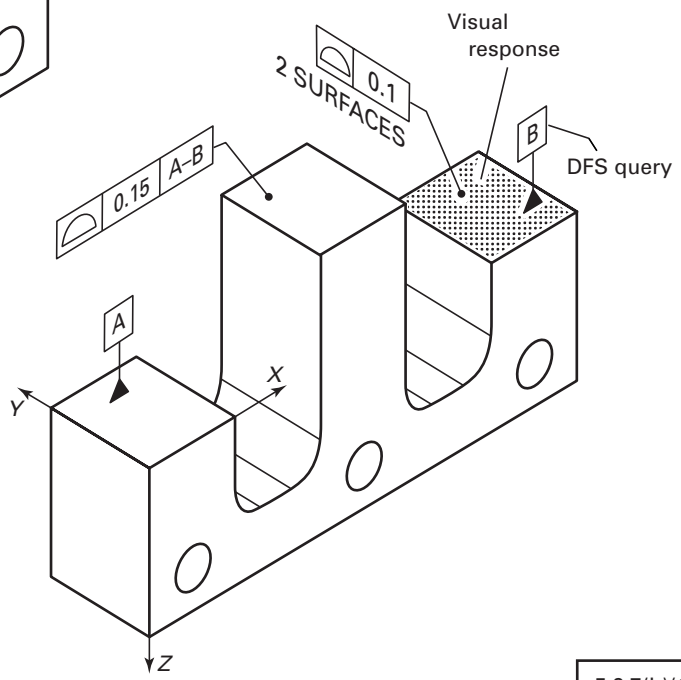

(c) Datum feature symbol associativity.

5.2.7(b)(1)
9.2.4(c)

Fig. 9-10 Separated Surfaces Establish a Datum Plane

Copyright ASME International
Provided by IHS under license with ASME
No reproduction or networking permitted without license from IHS
Not for Resale

FIG. 9-10 (d), (e), & (f)

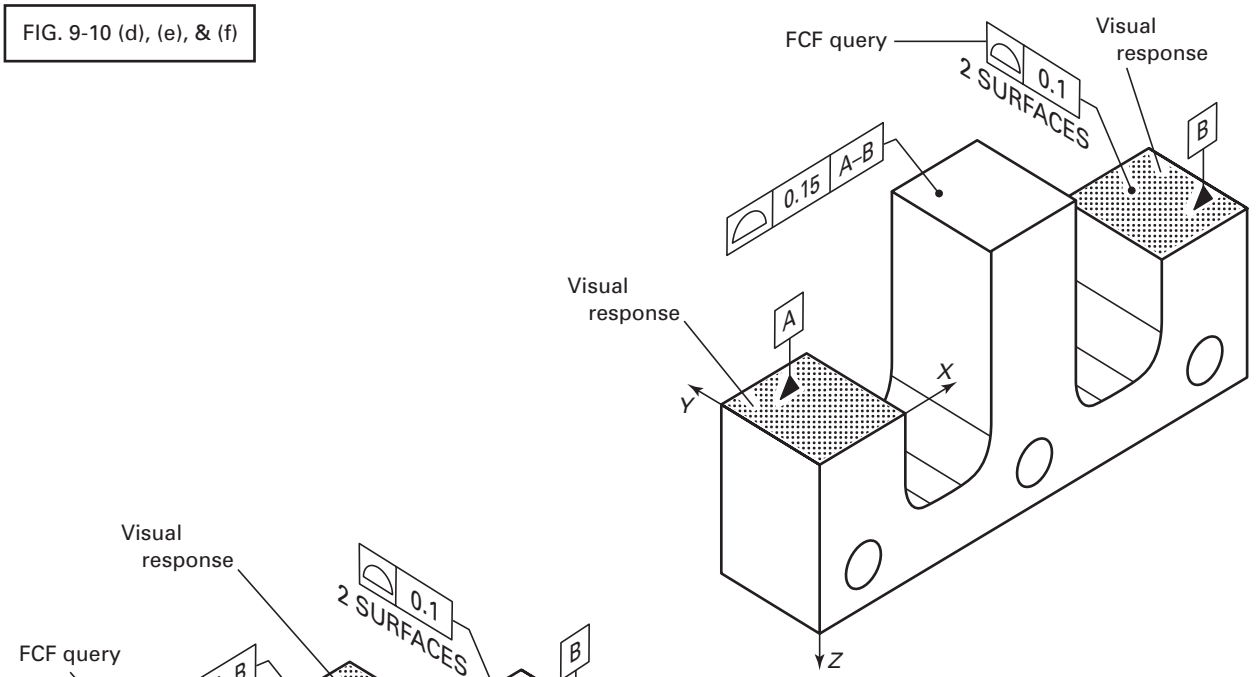

(d) Feature control frame associativity.

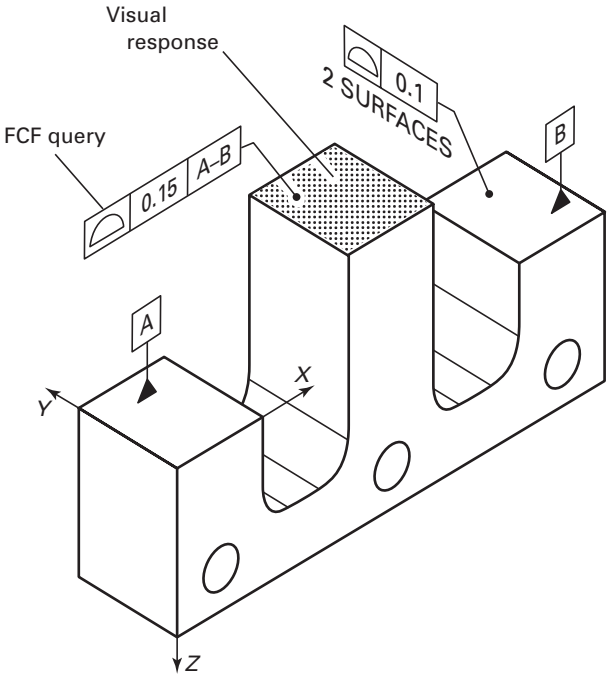

(e) Feature control frame associativity.

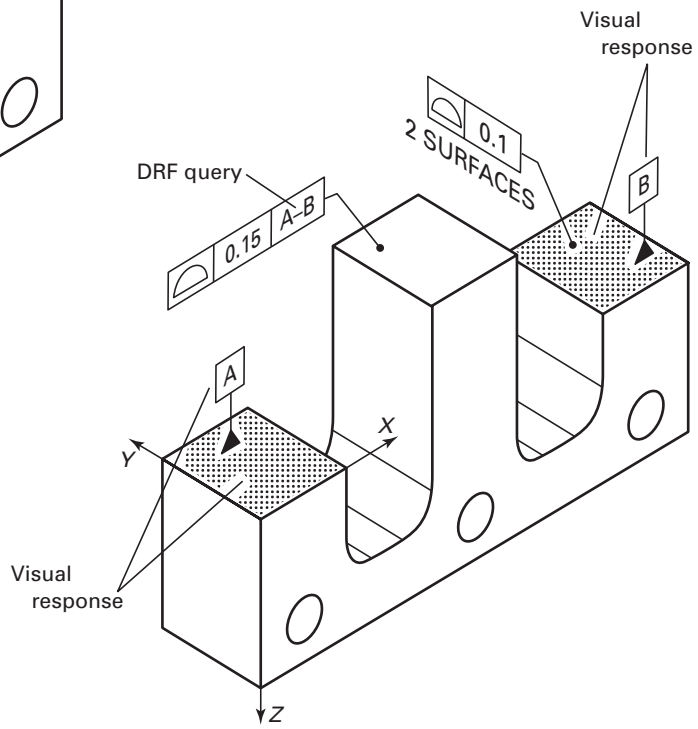

(f) Datum reference frame associativity.

Fig. 9-10 Separated Surfaces Establish a Datum Plane (Cont'd)

Copyright ASME International
Provided by IHS under license with ASME
No reproduction or networking permitted without license from IHS
Not for Resale

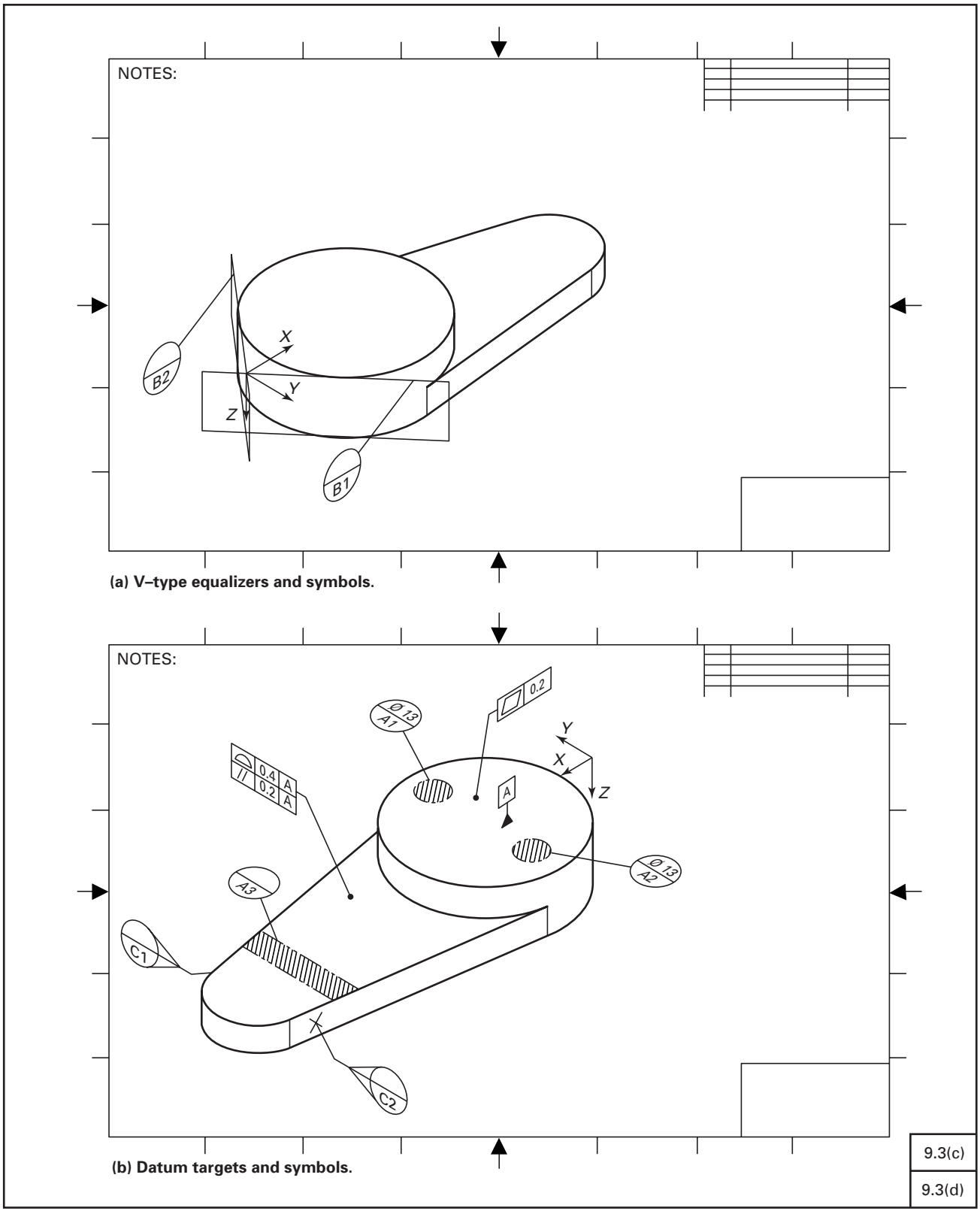

Fig. 9-11 Datum Targets and Symbols in an Axonometric View

Copyright ASME International
Provided by IHS under license with ASME
No reproduction or networking permitted without license from IHS
Not for Resale

Table 10-1 Form Tolerances

		Attachment Technique			
		Size Callout	Directed Leader	Paragraph	Figure
⏥	Planar Surface	...	●	10.2.1	10-1
	Limited Area	...	●	10.2.1(a)	9-3
⌖	Sphere	●	...	10-2.1(b)	10-2(a)
	Sphere	...	●	10-2.1(b)	10-2(b)
	Cylinder	●	...	10.2.1(b)	10-2(c)
	Cylinder	...	●	10-2.1(b)	10-2(d)
	Conical Surface	...	●	10-2.1(b)	10-2(e)
	Surface of Revolution	...	●	10-2.1(b)	10-2(f)
⌭	Cylinder	●	...	...	10-3(a)
	Cylinder	...	●	...	10-3(b)
⏤	Planar Surface	...	●	...	10-4
	Planar Surface	...	●	...	10-5
⏤	Cylindrical or Conical Surface	...	●	10.2.1(c)	10-6
⏤	Median Line or Plane	●	...	...	10-7

GENERAL NOTE: Table referenced in paras. 3.2.3(a)(1) and 10.2.1.

(b) Circular Runout Applied to a Spherical or Conical Surface, or a Surface of a Revolution. The circular runout frame shall be placed on an annotation plane perpendicular to the conical or revolved surface axis, or containing the center point of a sphere. See Fig. 10-31.

10.3 Drawing Requirements

When using orthographic views, geometric tolerances shall be specified in accordance with ASME Y14.5M unless otherwise specified. When axonometric views are used, the following paragraphs provide exceptions and additional requirements.

10.3.1 Requirements Applicable to all Geometric Tolerances

(a) Toleranced Features on Axonometric Views. A portion of the toleranced feature shall be visible in the view in which the tolerance is applied.

(b) Feature Control Frame Applied to a Feature of Size. When a geometric tolerance is applied to a feature of size, the feature control frame shall be placed below the size dimension. See Fig. 10-32(a).

(c) Feature Control Frame Applied to a Feature. The leader line shall terminate on the surface with a dot. See Fig. 10-32(b).

10.3.2 Form Tolerances. The requirements described in para. 10.3.1 apply unless otherwise specified.

(a) Flatness, Limited Area Application Using Axonometric Views. A limited area of application shall be represented using supplemental geometry. The leader directed from the flatness feature control frame shall be attached within the represented area. See Fig. 10-33.

(b) Straightness Applied to Line Elements of a Cylindrical Surface Using Axonometric Views. Straightness feature control frame shall be directed to a represented line element on the cylindrical surface indicating the direction of application. See Fig. 10-34(a).

10.3.3 Orientation Tolerances. The requirements described in para. 10.3.1 apply unless otherwise specified.

(a) Specifying Each Element Using Axonometric Views. The orientation feature control frame and the notation EACH ELEMENT shall be directed to the represented line element indicating the direction of application. See Fig. 10-34(b).

(b) Orienting an Axis with a Parallel Planes Tolerance Zone Using Axonometric Views. The orientation feature control frame shall be attached to the diametral size and any other geometric tolerance requirement. The orientation of the extension lines defines the orientation of the tolerance zone. See Fig. 10-35.

10.3.4 Profile Tolerances. The requirements described in para. 10.3.1 apply unless otherwise specified.

(a) Profile of a surface may be applied to a feature that is not displayed in a profile view.

(b) When an individual profile requirement is specified, it shall be attached using a directed leader. Table 10-3 lists individual profile applications.

(c) Profile of a surface applied to multiple surfaces. The tolerance shall be specified using one of the following.

Copyright ASME International
Provided by IHS under license with ASME
No reproduction or networking permitted without license from IHS Not for Resale

NOTE: The annotation planes shown here as dashed lines are for clarification only, and are not part of an actual presentation.

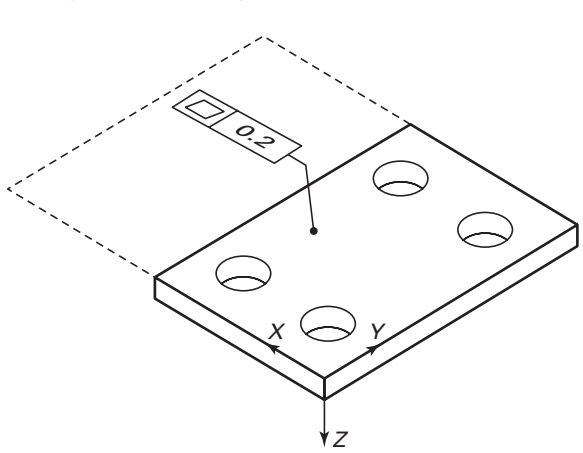

(a) Coincident annotation plane.

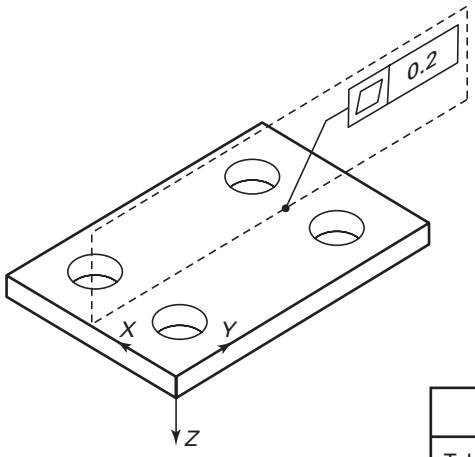

(b) Perpendicular annotation plane.

5.2.6
Table 10-1
10.2.1

Fig. 10-1 General Application of Geometric Tolerances – Coincident or Perpendicular Annotation Plane

(1) The feature control frame shall be directed to all of the toleranced features using one or more leader lines.

(2) A qualifying note such as 4 SURFACES INDICATED K shall accompany the feature control frame and the appropriate features shall be identified. See Fig. 10-36.

(3) The between symbol shall be placed beneath the feature control frame. The features shall be identified with two lines to indicate the limits of the area of application. The lines shall be labeled and referred to with the between symbol. See Fig. 10-37.

(d) Profile of a Surface Using the All-Around Symbol. When the all-around symbol is used with a profile of a surface, it shall be shown in an orthographic view that contains the true profile of the toleranced features.

(e) Profile of a Surface, Unilaterally Disposed. When a profile tolerance is unilaterally disposed, a modifier shall be added to the feature control frame immediately following the tolerance value. A value shall be added after the modifier to show the amount of the tolerance zone outward from the surface. When the tolerance zone is outward, the value following the modifier shall be identical to the tolerance value. When the tolerance zone is inward, the value following the modifier shall be zero. See Fig. 10-38 and Mandatory Appendix I.

(f) Profile of a Surface, Unequally Disposed. When a profile tolerance is unequally disposed, a modifier shall be added to the feature control frame immediately following the tolerance value. A value shall be added after the modifier to show the amount of the tolerance zone outward from the surface. The remainder of the tolerance is inward. See Fig. 10-39 and Mandatory Appendix I.

(g) Profile of a Line Using Axonometric Views. When a line profile callout is required, it shall be applied to a represented line element showing the direction of application.

(h) General Application of Surface Profile. When a surface profile callout is required, it shall be applied using a directed leader.

10.3.5 Position Tolerances

(a) The requirements described in para. 10.3.1 apply unless otherwise specified.

(b) When a boundary control for a non-cylindrical feature is required, the applicable geometric tolerances shall be shown in an orthographic view that contains the true profile of the toleranced feature.

10.3.6 Runout Tolerances On a Drawing. Runout tolerances shall be applied as described in para. 10.3.1.

Copyright ASME International
Provided by IHS under license with ASME
No reproduction or networking permitted without license from IHS
Not for Resale

Table 10-2 Orientation Tolerances

		Attachment Technique				
		Size Callout	Directed Leader	Extension Lines	Paragraph	Figure
⊥ // ∠ ▭	Planar Surface	. . .	●	. . .	. . .	10-8
⊥ // ∠ ▭	Each Element	. . .	●	. . .	10.2.2(a)	10-9
	Each Element	. . .	●	. . .	10.2.2(b)	10-10
∠ ▭	Inclined Surface	. . .	●	. . .		10-11
⊥ // ∠ ▭	Cylinder	●	. . .	. . .	. . .	10-12(a)
	Cylinder	. . .	●	. . .	. . .	10-12(b)
⊥ // ∠ ▭	Width (Set of Opposed Parallel Surfaces)	●	. . .	. . .	. . .	10-12(c)
	Width (Set of Opposed Parallel Surfaces)	. . .	. . .	●	. . .	10-12(d)
⊥ // ∠ ▭	Axis — Within a Parallel Planes Tolerance Zone	●	. . .	. . .	10.2.2(c)	10-13(a)
	Axis — Within a Parallel Planes Tolerance Zone	. . .	. . .	●	. . .	10-13(b)

GENERAL NOTES:
(a) All three symbols are shown for applications that apply equally to perpendicularity, parallelism, and angularity.
(b) Table referenced in para. 10.2.2.

Copyright ASME International
Provided by IHS under license with ASME
No reproduction or networking permitted without license from IHS
Not for Resale

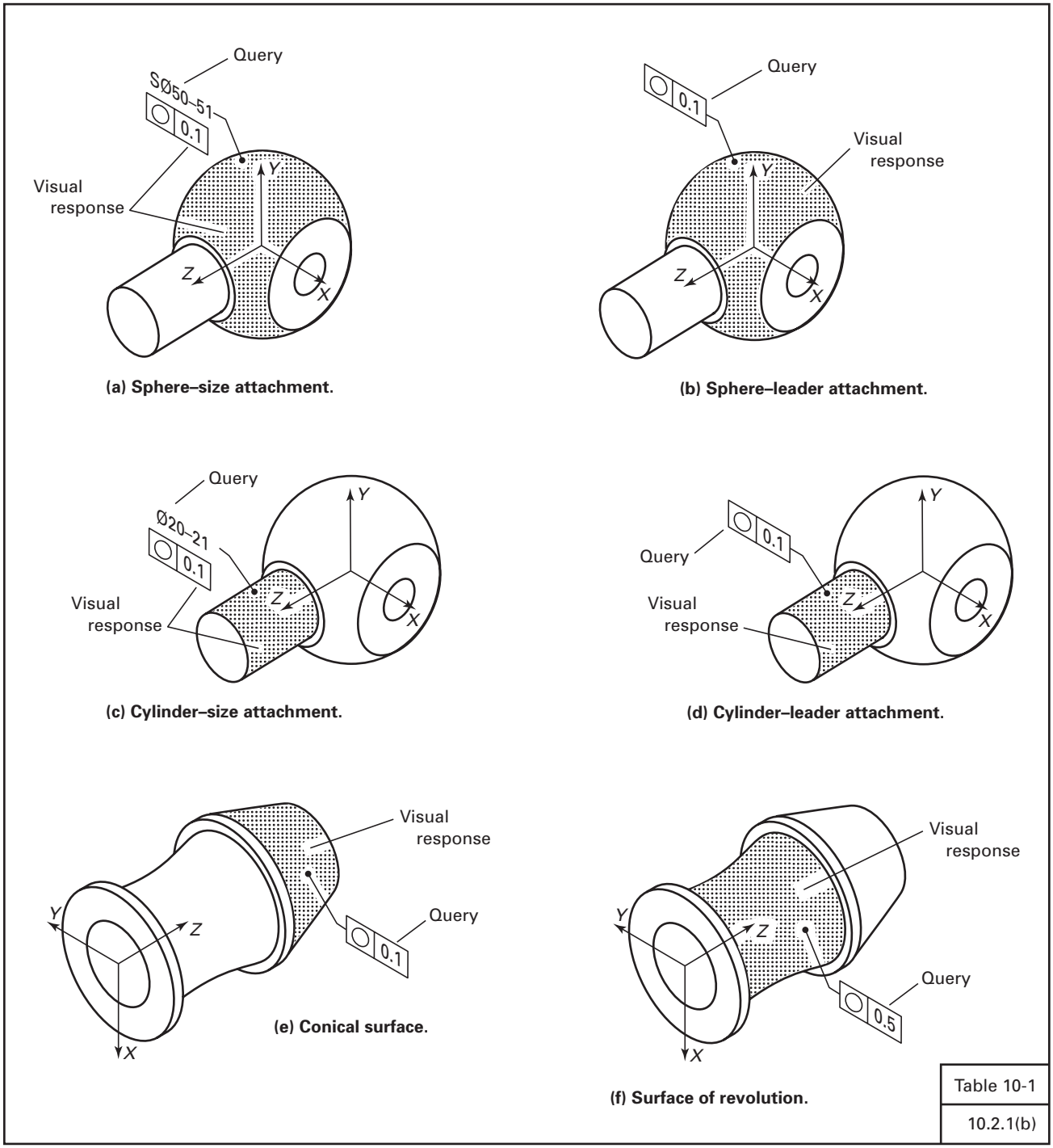

Fig. 10-2 Circularity – Sphere, Cylinder, Conical, or Revolved Surface

Copyright ASME International
Provided by IHS under license with ASME
No reproduction or networking permitted without license from IHS
Not for Resale

Table 10-3 Profile Tolerances

		Attachment Technique		
		Directed Leader	Paragraph	Figure
	Planar Surface	●	. . .	10-14(a)
	Conical or Revolved Surface	●	10.2.3(a)	10-14(b)
	Multiple or Co-Planar Surfaces	●	10.2.3(b)	10-15
	Between Basis	●	10.2.3(c)	10-16
	All-Around Basis	●	10.2.3(d)	10-17
	Unilaterally Disposed	●	10.2.3(e)	10-18
	Unequally Disposed	●	10.2.3(f)	10-19
	Line Elements Line Elements	● ●	10.2.3(g) 10.2.3(h)	10-20 10-21

GENERAL NOTE: Table referenced in paras. 10.2.3 and 10.3.4(b).

Table 10-4 Location Tolerances

		Attachment Technique				
		Size Callout	Directed Leader	Extension Lines	Paragraph	Figure
	Individually, to an Individual Datum Individually, to an Individual Datum	● . . .	. . . ●	. . . . . .	10.2.4(a) 10.2.4(a)	10-22 (a) 10-22(b)
	Projected Tolerance Zone Projected Tolerance Zone	● . . .	. . . ●	. . . . . .	10-2.4(b) 10-2.4(b)	10-23(a) 10-23(b)
	Extremities of Long Holes	●	●	. . .	10.2.4(c)	10-24
	Elongated Holes (Slots) Boundary Basis Elongated Holes (Slots) Boundary Basis Elongated Holes (Slots) Boundary Basis	●	. . . ● . . .	. . . . . . ●	. . . . . .	10-25(a) 10-25(b) 10-25(c)
	Bi-Directional, Polar or Rectangular Coordinates	. . .	. . .	●	10.2.4(d)	10-26
	Profile and Boundary Position	. . .	●	. . .	10.2.4(e)	10-27
	Derived Median Line Derived Median Line	● . . .	. . . ●	. . . . . .	. . . . . .	10-28(a) 10-28(b)
	Derived Median Plane Derived Median Plane	● . . .	. . . . . .	. . . ●	. . . . . .	10-28(c) 10-28(d)

GENERAL NOTE: Table referenced in para. 10.2.4.

Copyright ASME International
Provided by IHS under license with ASME
No reproduction or networking permitted without license from IHS
Not for Resale

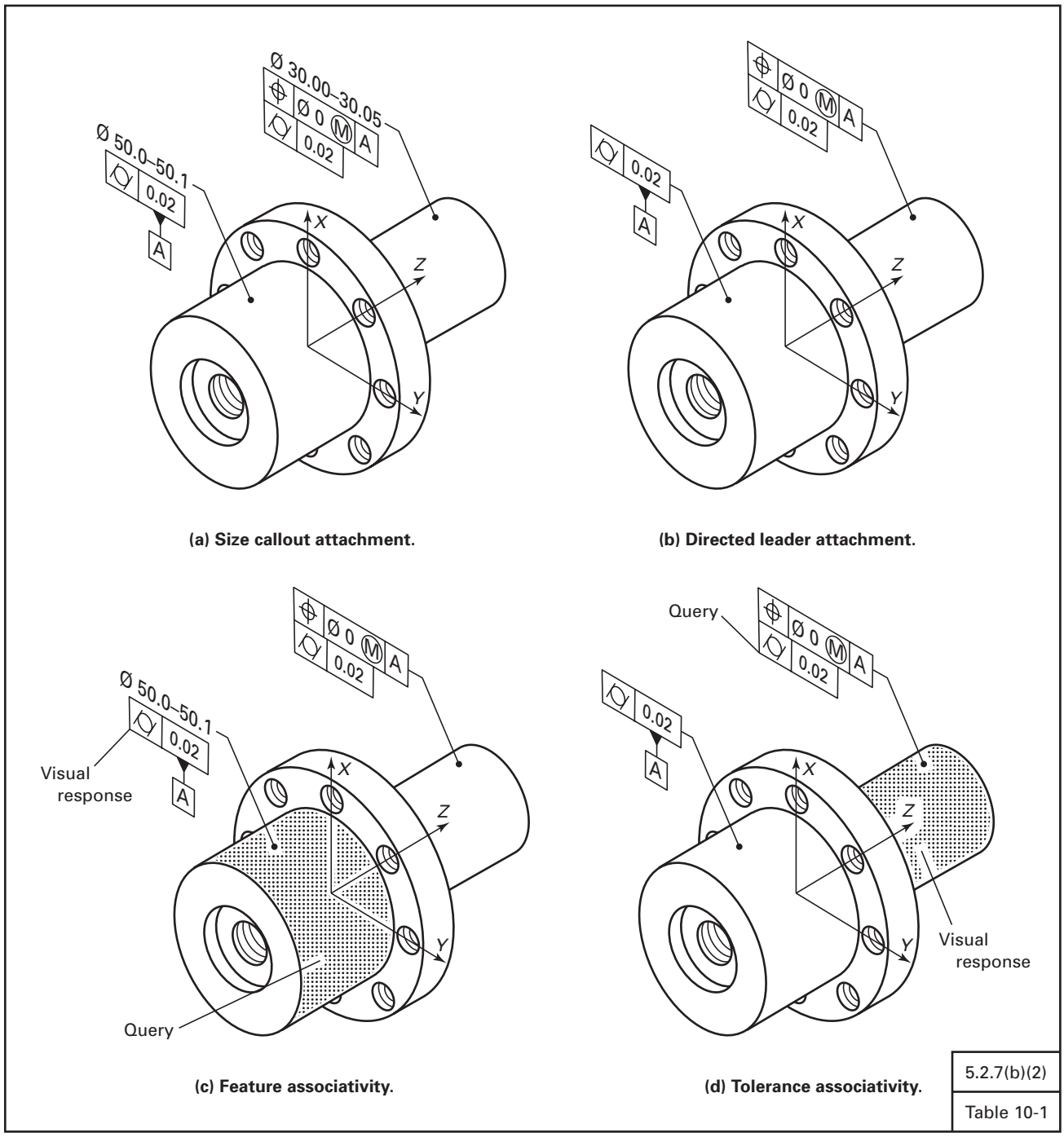

Fig. 10-3 Cylindricity

Copyright ASME International
Provided by IHS under license with ASME
No reproduction or networking permitted without license from IHS
Not for Resale

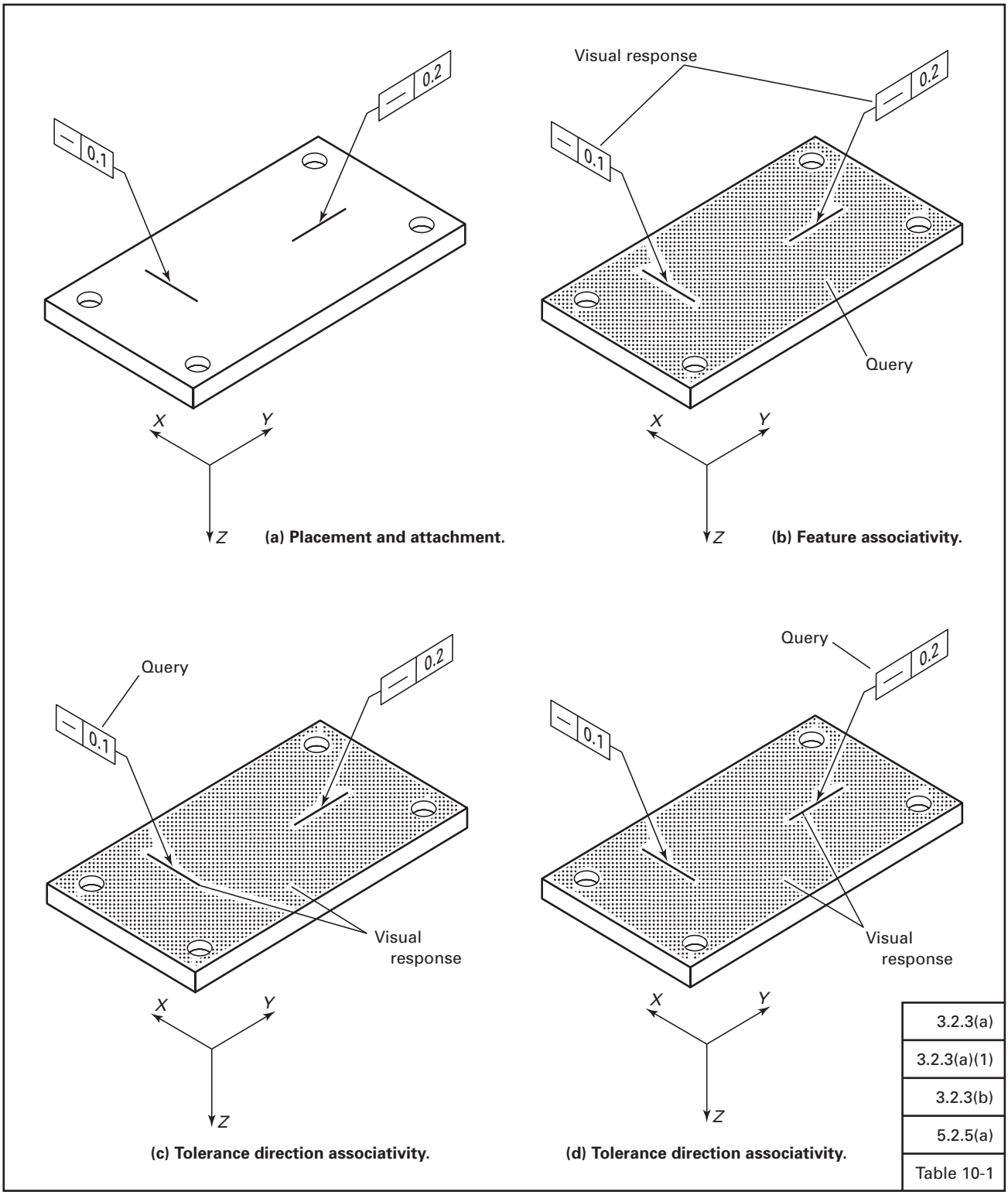

(a) Placement and attachment.

(b) Feature associativity.

(c) Tolerance direction associativity.

(d) Tolerance direction associativity.

3.2.3(a)
3.2.3(a)(1)
3.2.3(b)
5.2.5(a)
Table 10-1

Fig. 10-4 Straightness – Directed by Line Element

Copyright ASME International
Provided by IHS under license with ASME
No reproduction or networking permitted without license from IHS
Not for Resale

Table 10-5 Runout Tolerances

		Attachment Technique			
		Size Callout	Directed Leader	Paragraph	Figure
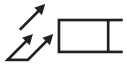	Associativity	●	●	10.2.5(a)(1), 10.2.5(a)(3)	10-29
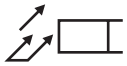	Surface, Perpendicular to a Datum Axis	. . .	●	. . .	10-30(a)
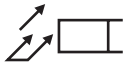	Cylindrical Surface	●	. . .	. . .	10-30(b)
	Cylindrical Surface	. . .	●	. . .	10.30(c)
	Spherical Surface	●	. . .	. . .	10-31(a)
	Spherical Surface	. . .	●	. . .	10.31(b)
	Conical or Resolved Surface	. . .	●	10.2.5(b)	10-31(c)

GENERAL NOTES:
(a) Both symbols are shown for applications that apply equally to circular and total runout.
(b) Table referenced in para. 10.2.5.

Copyright ASME International
Provided by IHS under license with ASME
No reproduction or networking permitted without license from IHS Not for Resale

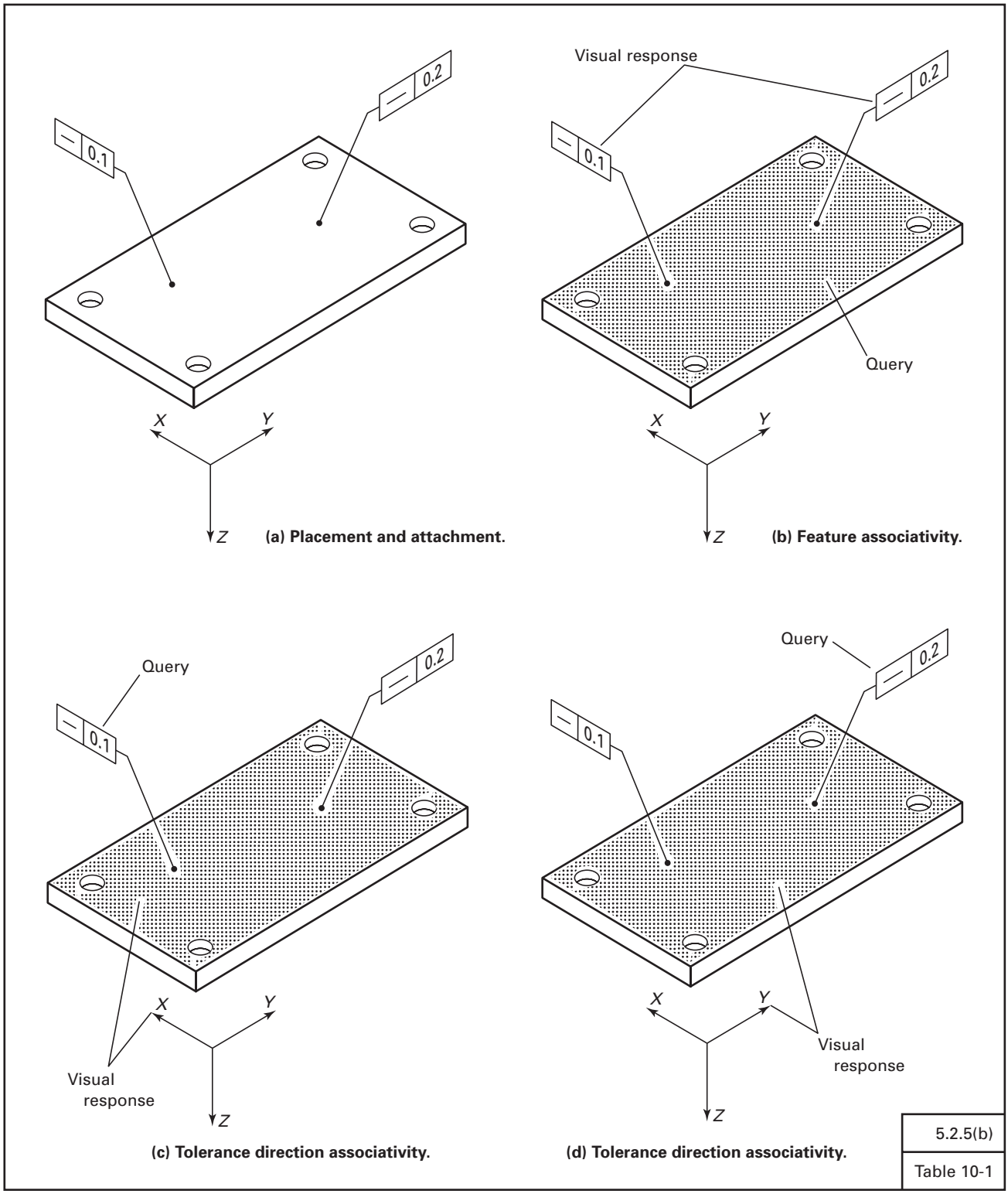

Fig. 10-5 Straightness – Directed by Ordinate Axis

Copyright ASME International
Provided by IHS under license with ASME
No reproduction or networking permitted without license from IHS
Not for Resale

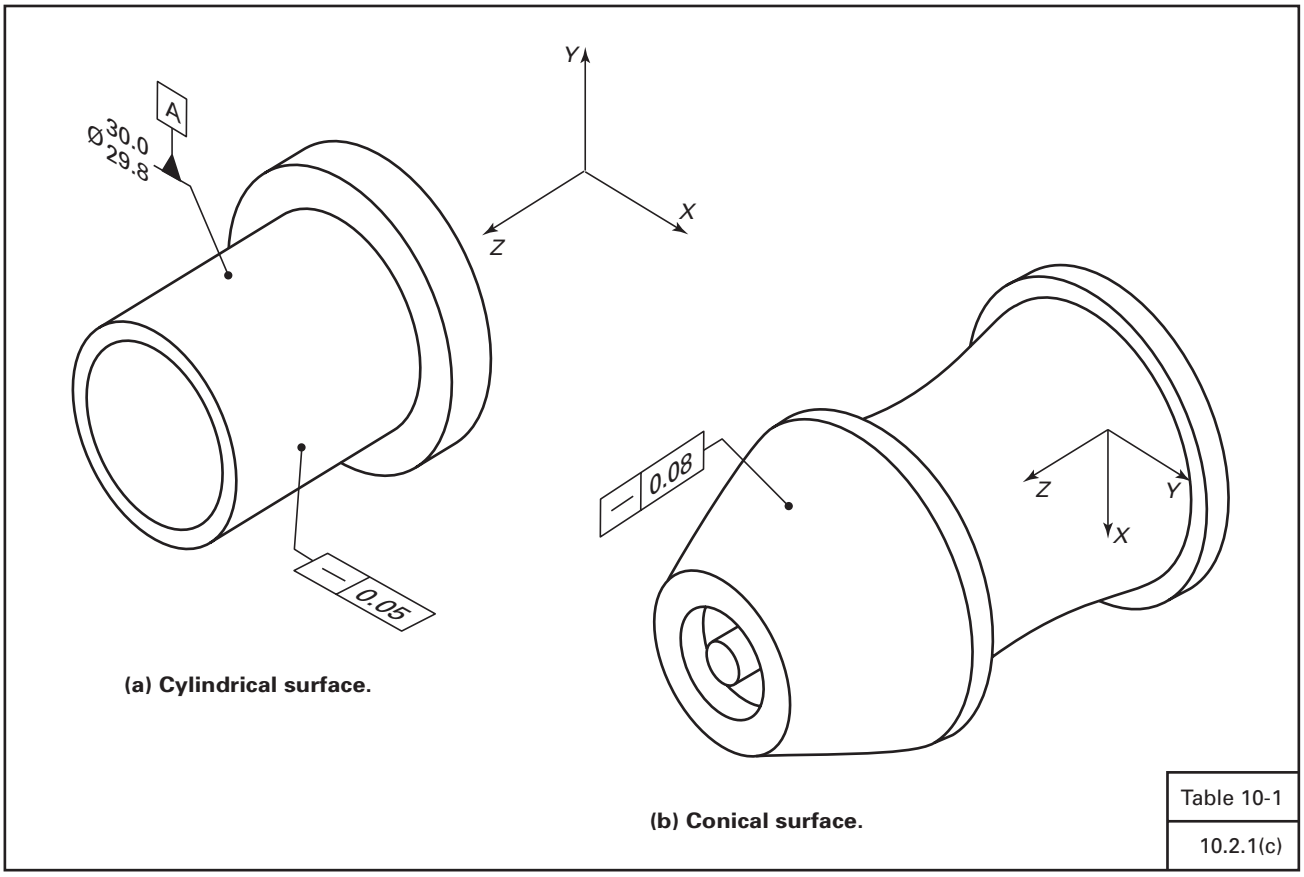

Fig. 10-6 Straightness – Cylindrical or Conical Surface

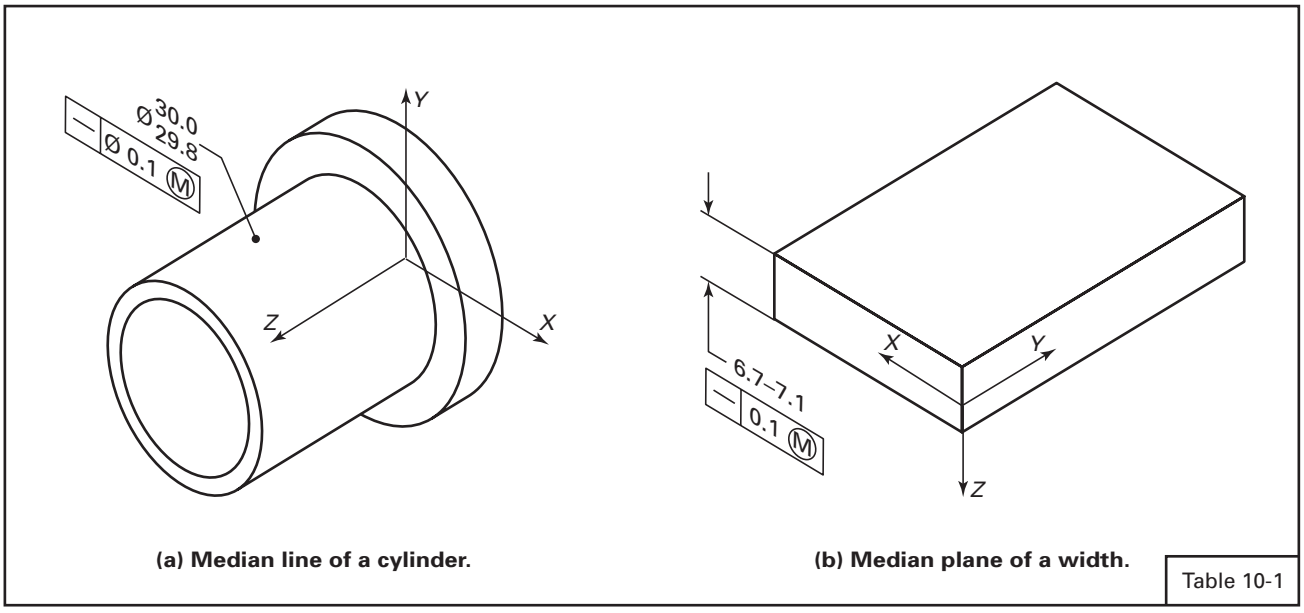

Fig. 10-7 Straightness – Median Line or Median Plane

Copyright ASME International
Provided by IHS under license with ASME
No reproduction or networking permitted without license from IHS
Not for Resale

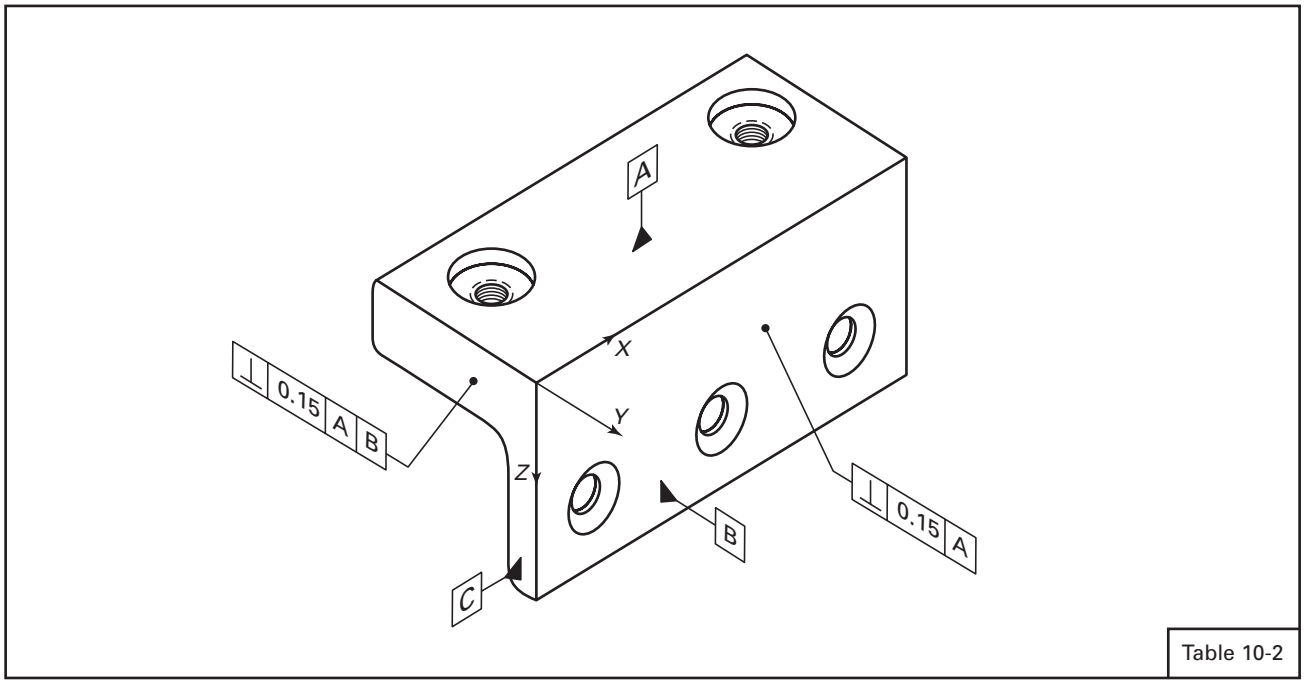

Fig. 10-8 Orientation – Planar Surfaces

Copyright ASME International
Provided by IHS under license with ASME
No reproduction or networking permitted without license from IHS
Not for Resale

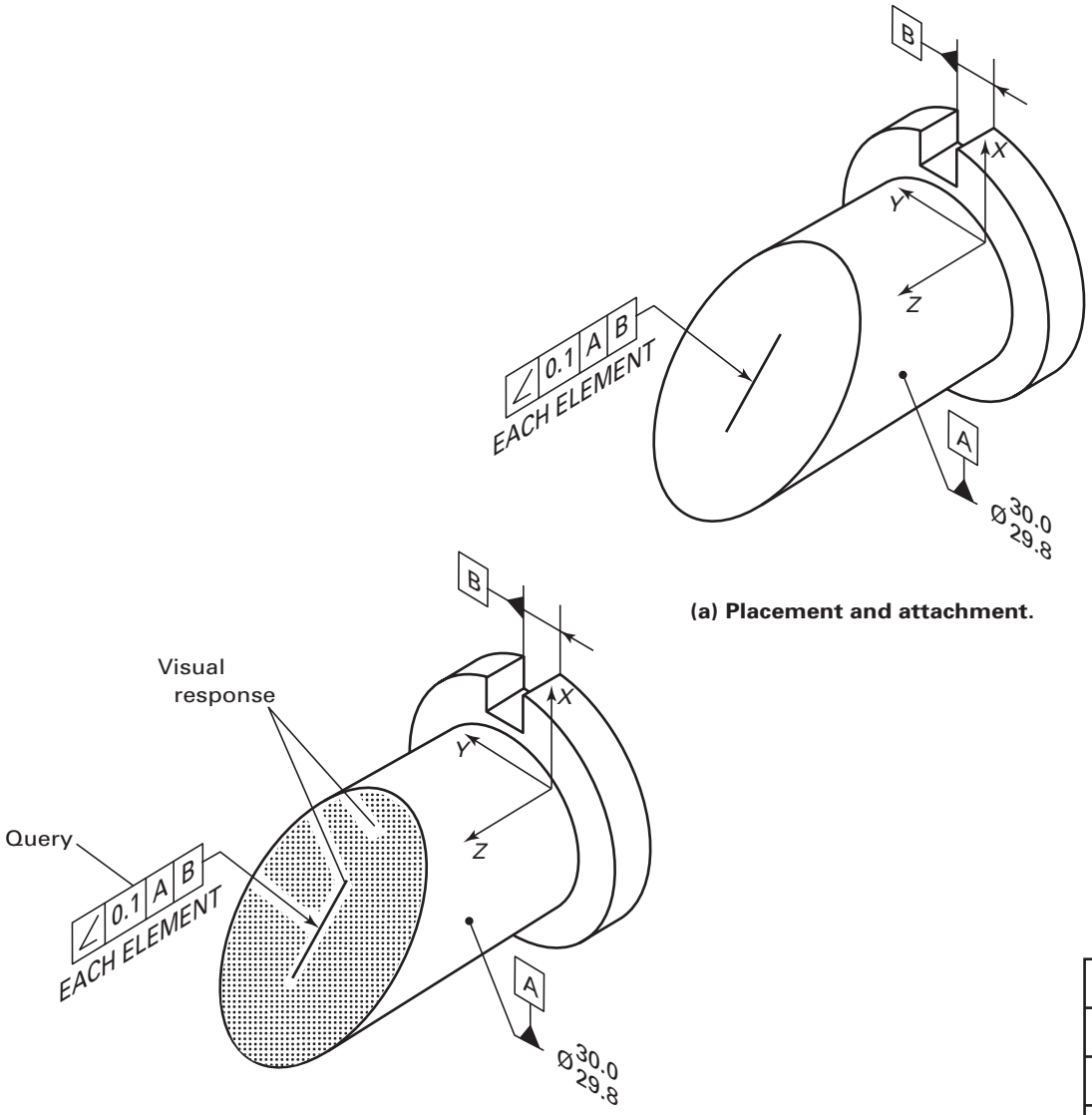

(a) Placement and attachment.

(b) Tolerance direction associativity.

3.2.3(a)(2)
3.2.3(b)
5.2.5(a)
Table 10-2
10.2.2(a)

Fig. 10-9 Each Element Orientation – Directed by Line Element

Copyright ASME International
Provided by IHS under license with ASME
No reproduction or networking permitted without license from IHS
Not for Resale

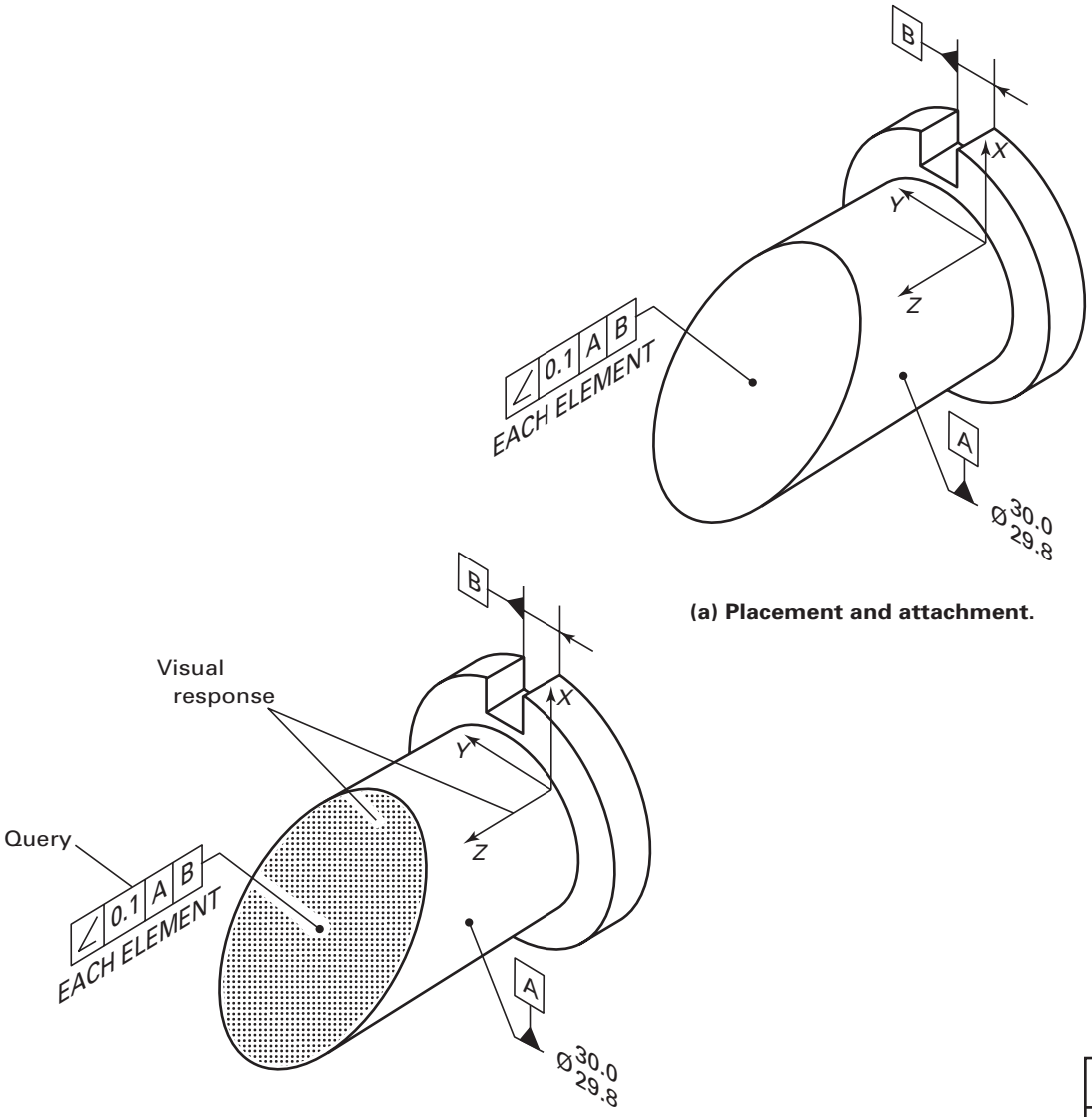

(a) Placement and attachment.

(b) Tolerance direction associativity.

5.2.5(b)
Table 10-2
10.2.2(b)

Fig. 10-10 Each Element Orientation – Directed by Ordinate Axis

Copyright ASME International
Provided by IHS under license with ASME
No reproduction or networking permitted without license from IHS
Not for Resale

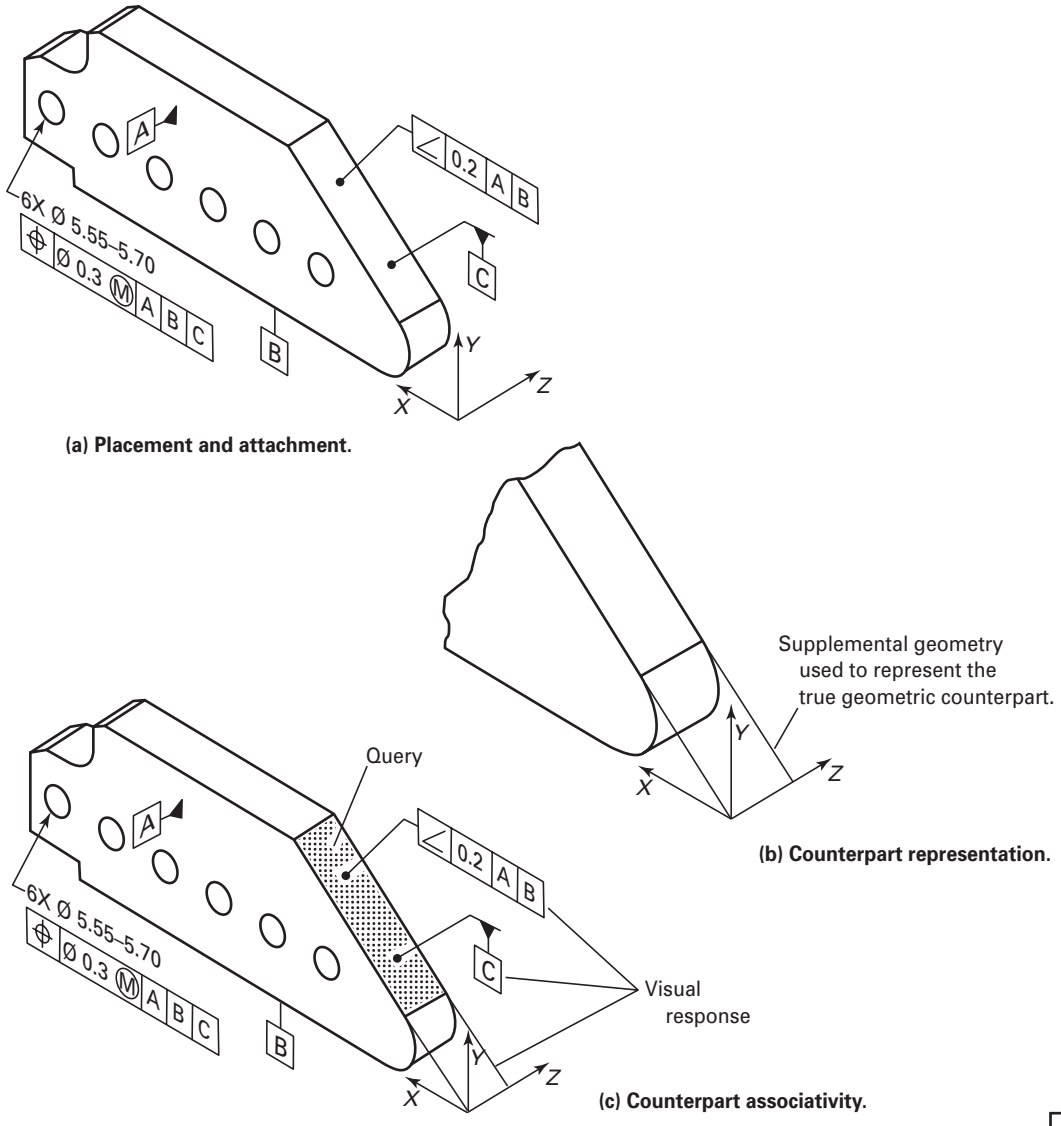

Table 10-2

Fig. 10-11 Orientation – Inclined Surface

Copyright ASME International
Provided by IHS under license with ASME
No reproduction or networking permitted without license from IHS
Not for Resale

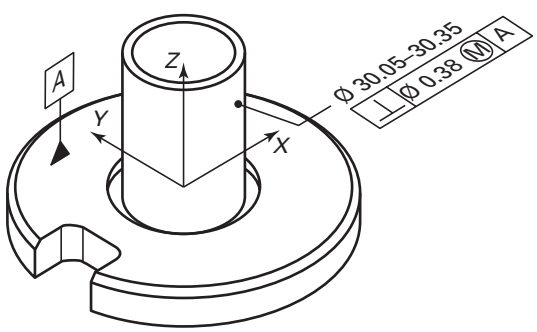

(a) Cylinder– size attachment.

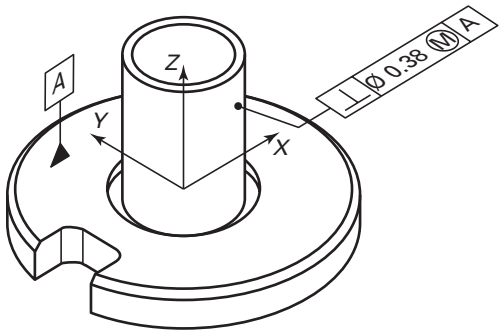

(b) Cylinder– leader attachment.

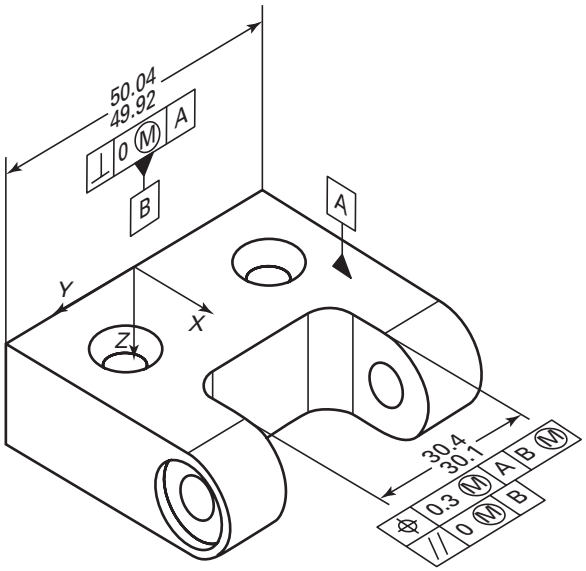

(c) Width– size attachment.

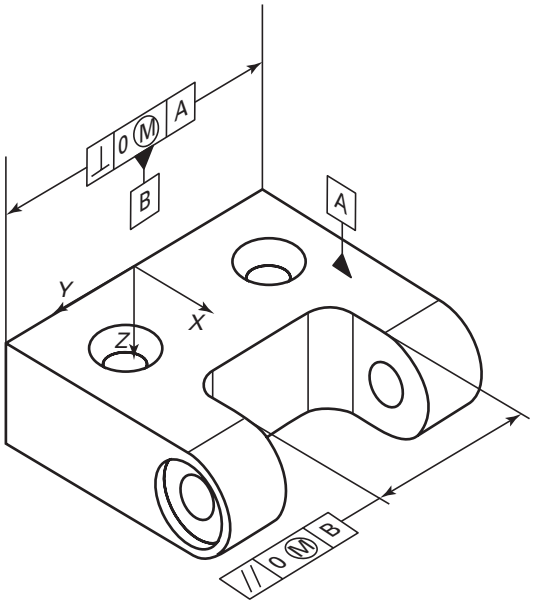

(d) Width– extension lines attachment.

Table 10-2

Fig. 10-12 Orientation – Cylinder or a Set of Opposed Parallel Surfaces

Copyright ASME International
Provided by IHS under license with ASME
No reproduction or networking permitted without license from IHS
Not for Resale

NOTE: The tolerance zones shown here are for clarification only, and are not part of an actual presentation.

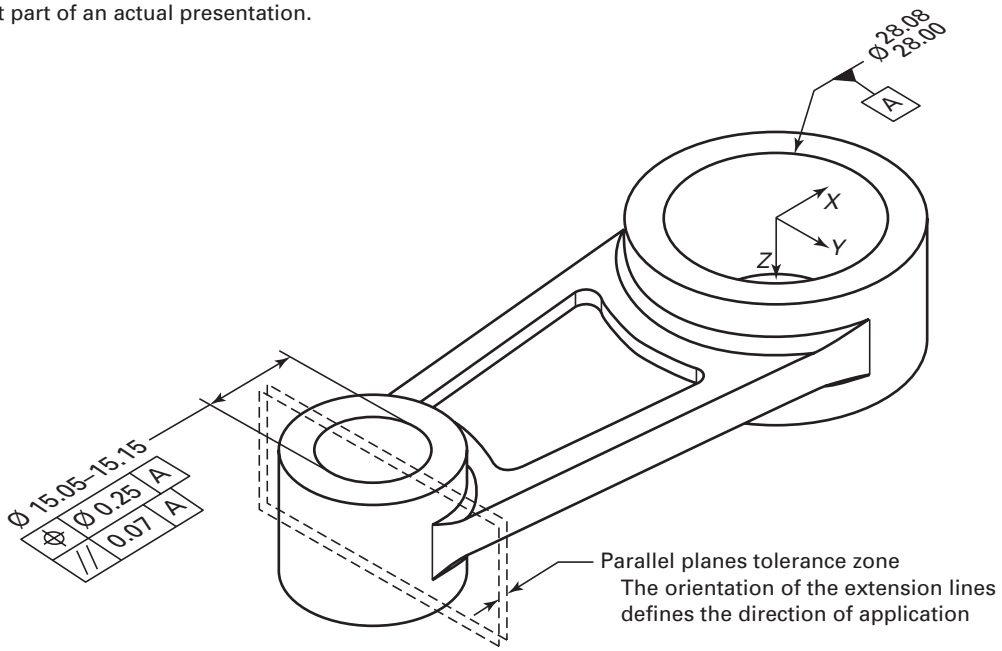

(a) Size callout attachment.

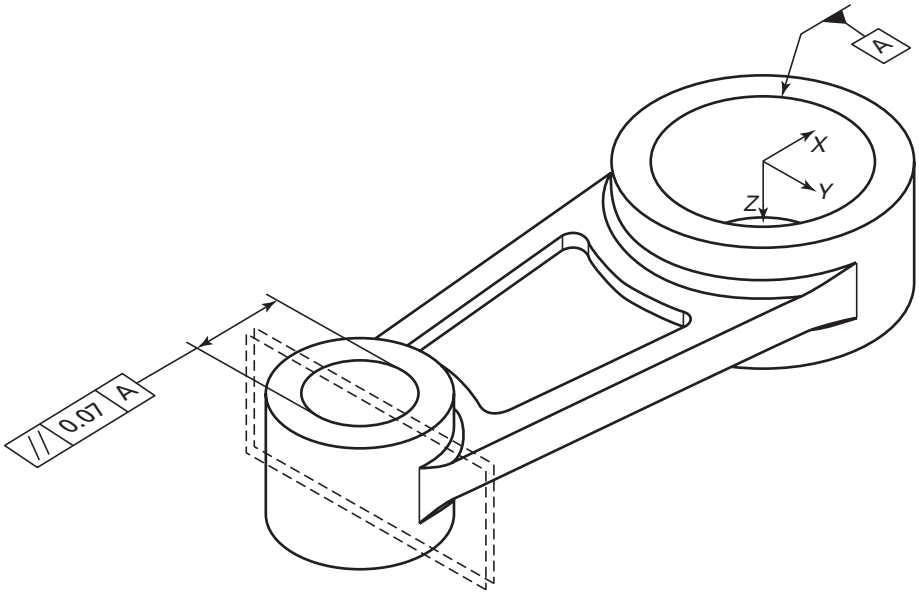

(b) Extension lines attachment.

Table 10-2
10.2.2(c)

Fig. 10-13 Orientation of an Axis With a Parallel Planes Tolerance Zone

Copyright ASME International
Provided by IHS under license with ASME
No reproduction or networking permitted without license from IHS
Not for Resale

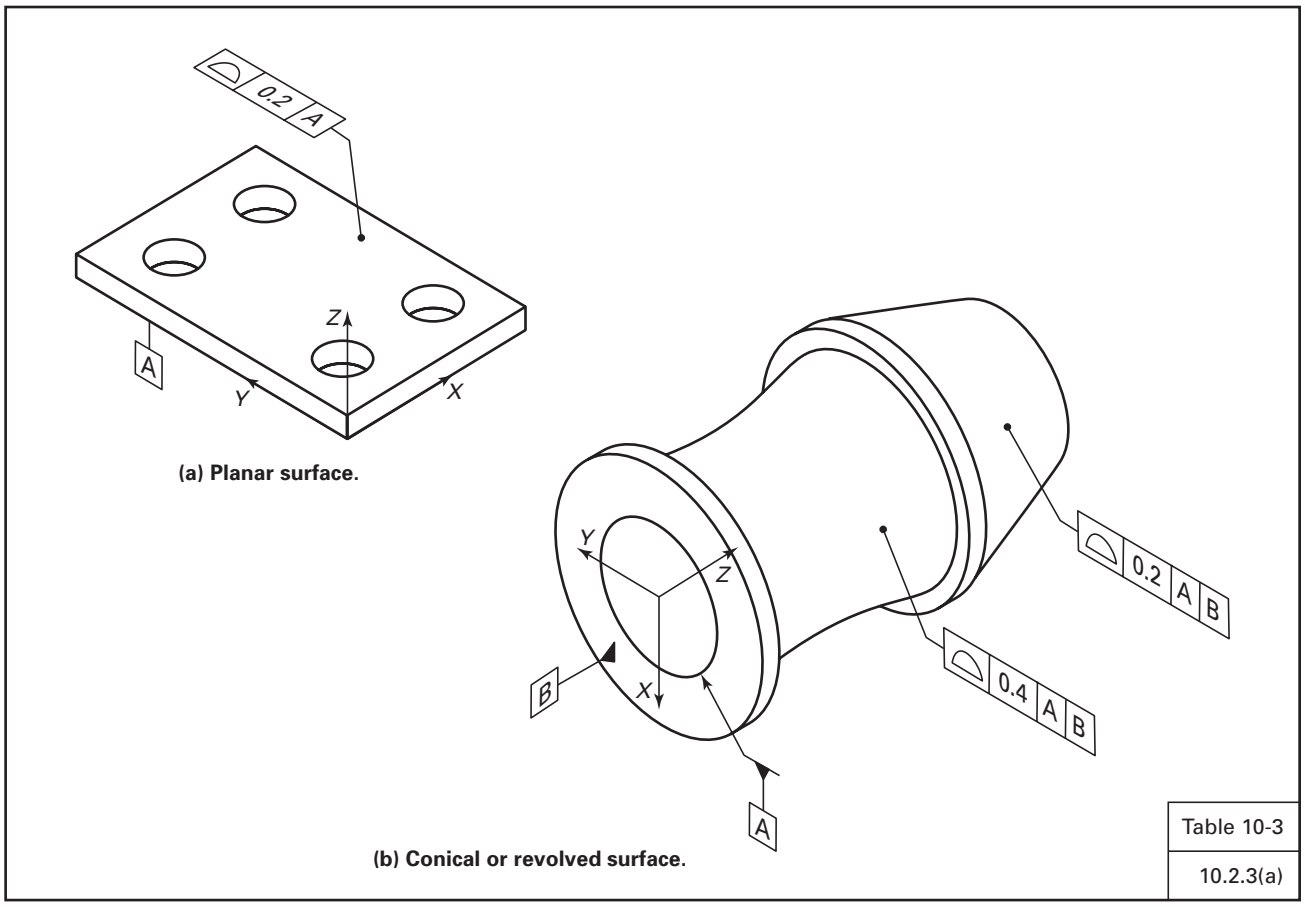

Fig. 10-14 Profile – Planar, Conical, or Revolved Surface

Copyright ASME International
Provided by IHS under license with ASME
No reproduction or networking permitted without license from IHS
Not for Resale

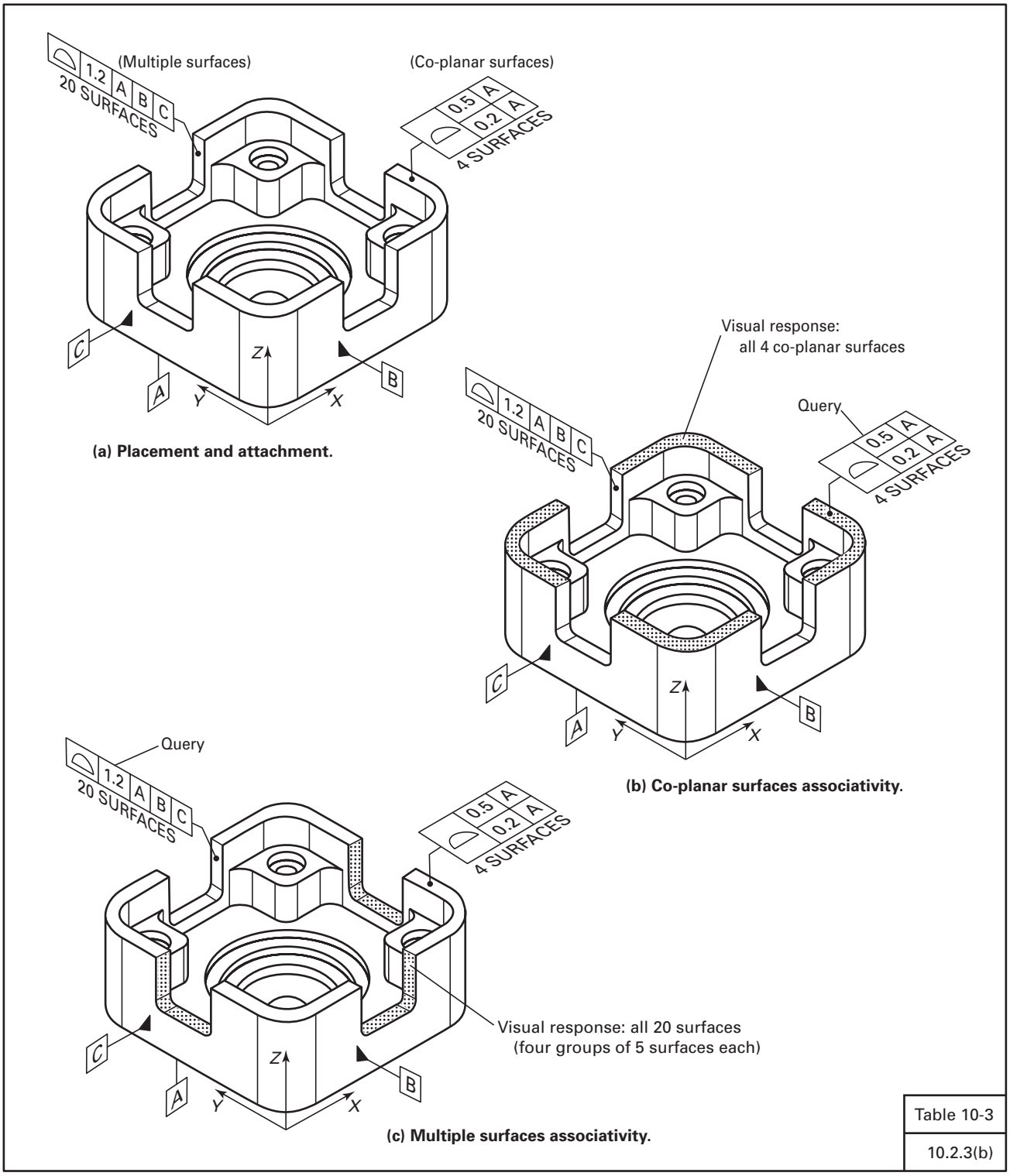

Fig. 10-15 Profile – Multiple or Co-Planar Surfaces

Copyright ASME International
Provided by IHS under license with ASME
No reproduction or networking permitted without license from IHS
Not for Resale

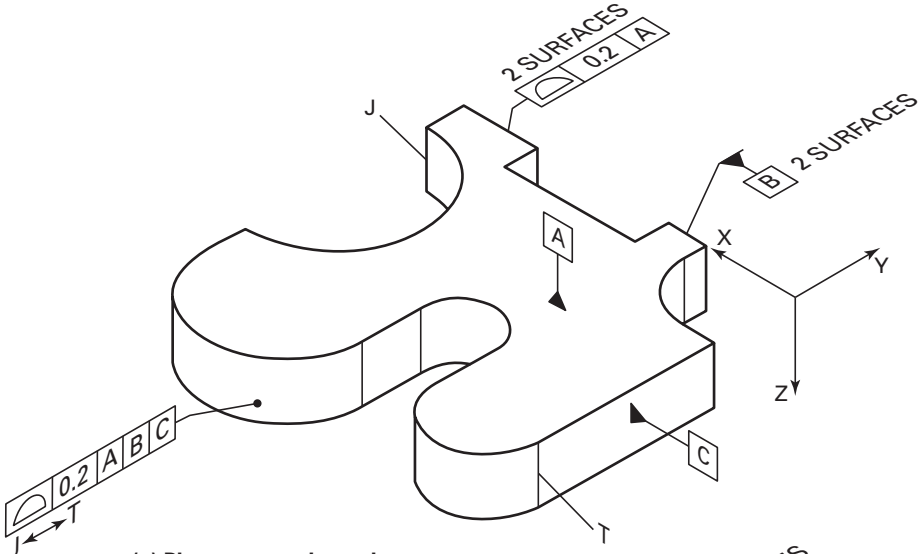

(a) Placement and attachment.

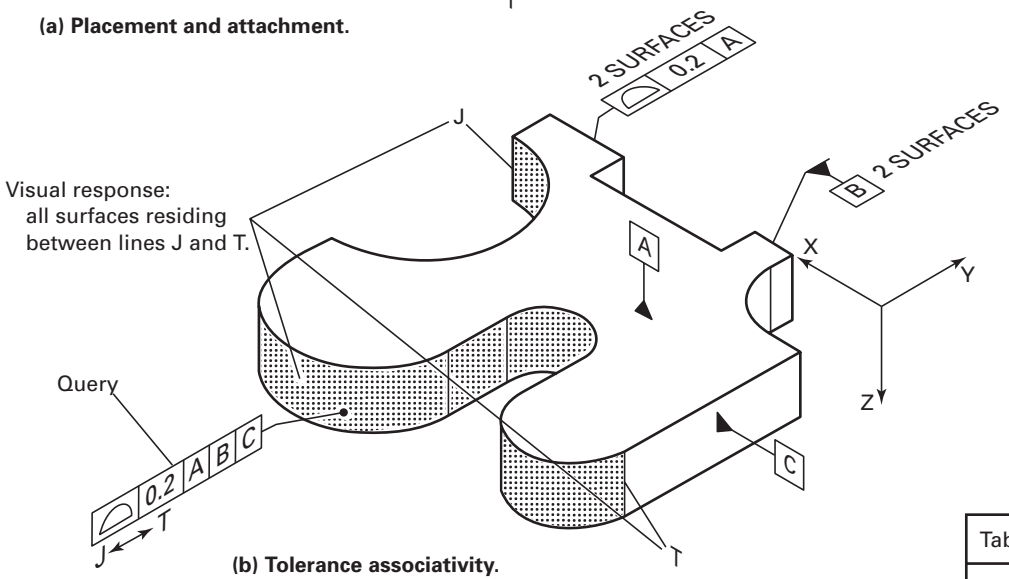

(b) Tolerance associativity.

Table 10-3
10.2.3(c)

Fig. 10-16 Profile – Between Basis

Copyright ASME International
Provided by IHS under license with ASME
No reproduction or networking permitted without license from IHS
Not for Resale

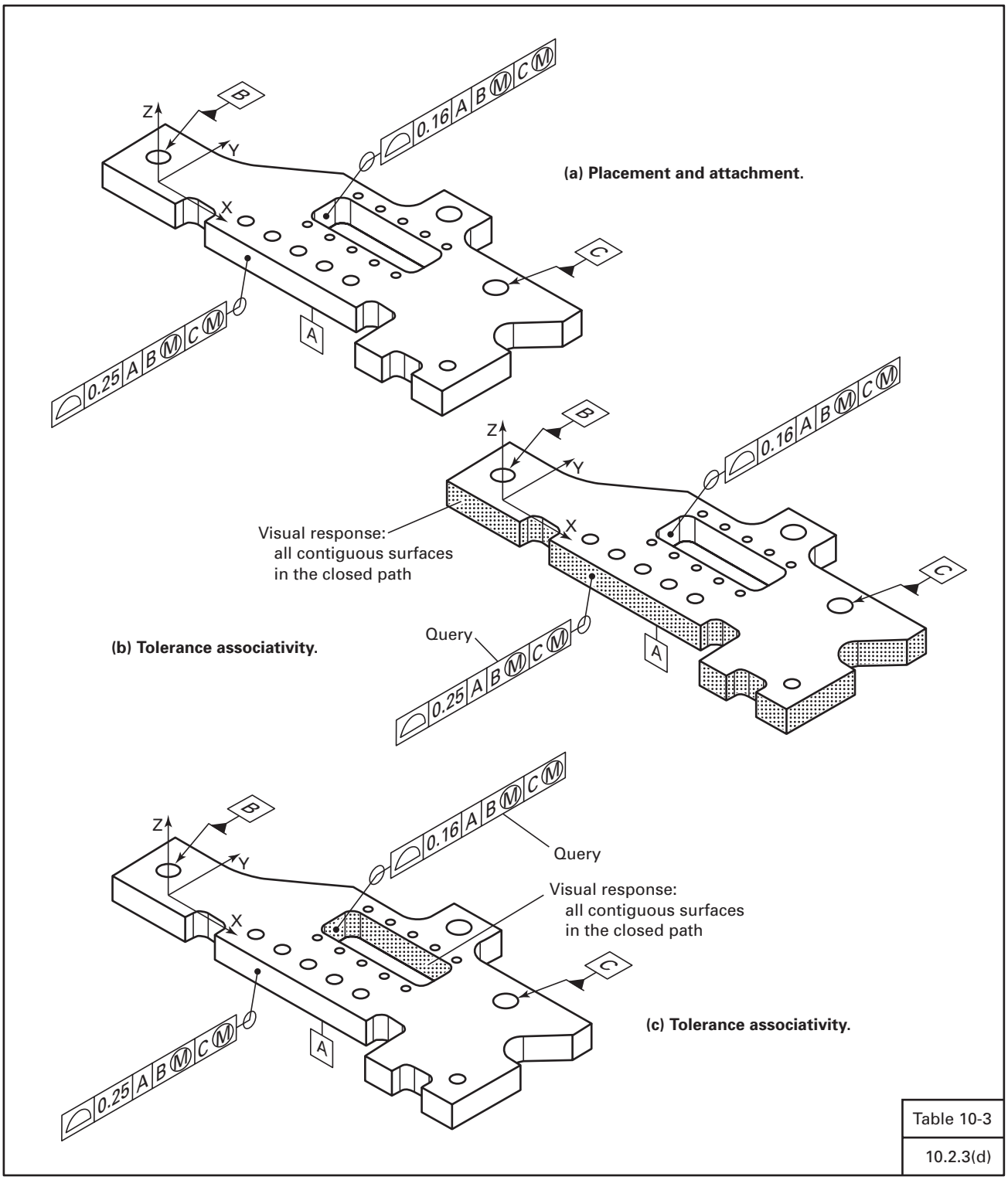

Fig. 10-17 Profile – All-Around Application

Copyright ASME International
Provided by IHS under license with ASME
No reproduction or networking permitted without license from IHS
Not for Resale

NOTE: The exaggerated tolerance zones shown here are for clarification only, and are not part of an actual presentation.

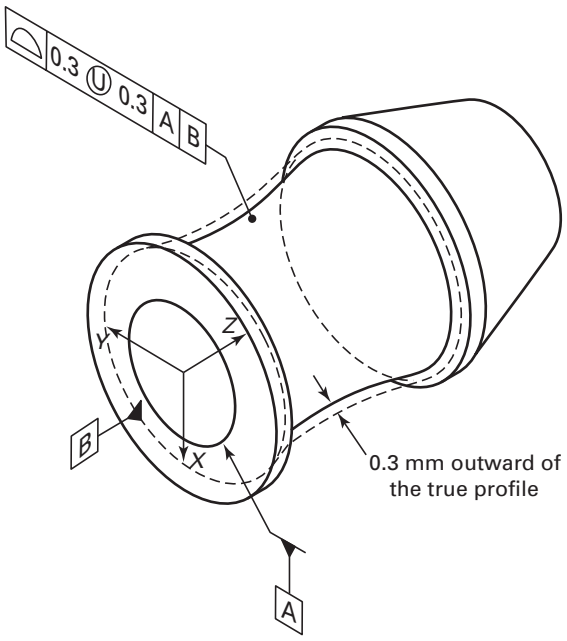

(a) Outward profile tolerance.

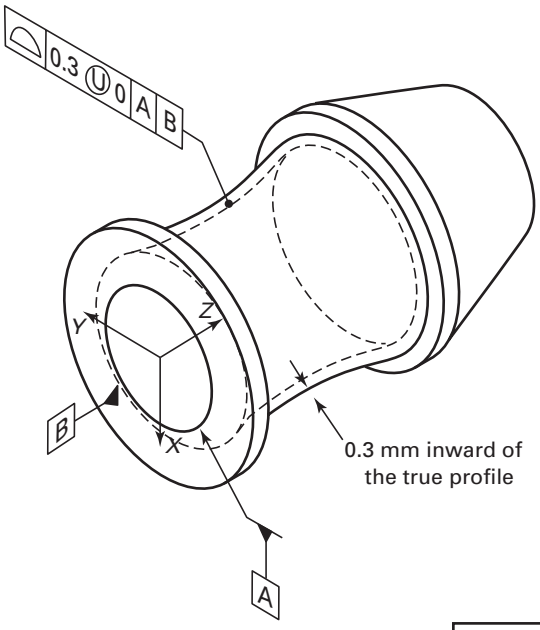

(b) Inward profile tolerance.

Table 10-3
10.2.3(e)

Fig. 10-18 Profile – Unilaterally Disposed

Copyright ASME International
Provided by IHS under license with ASME
No reproduction or networking permitted without license from IHS
Not for Resale

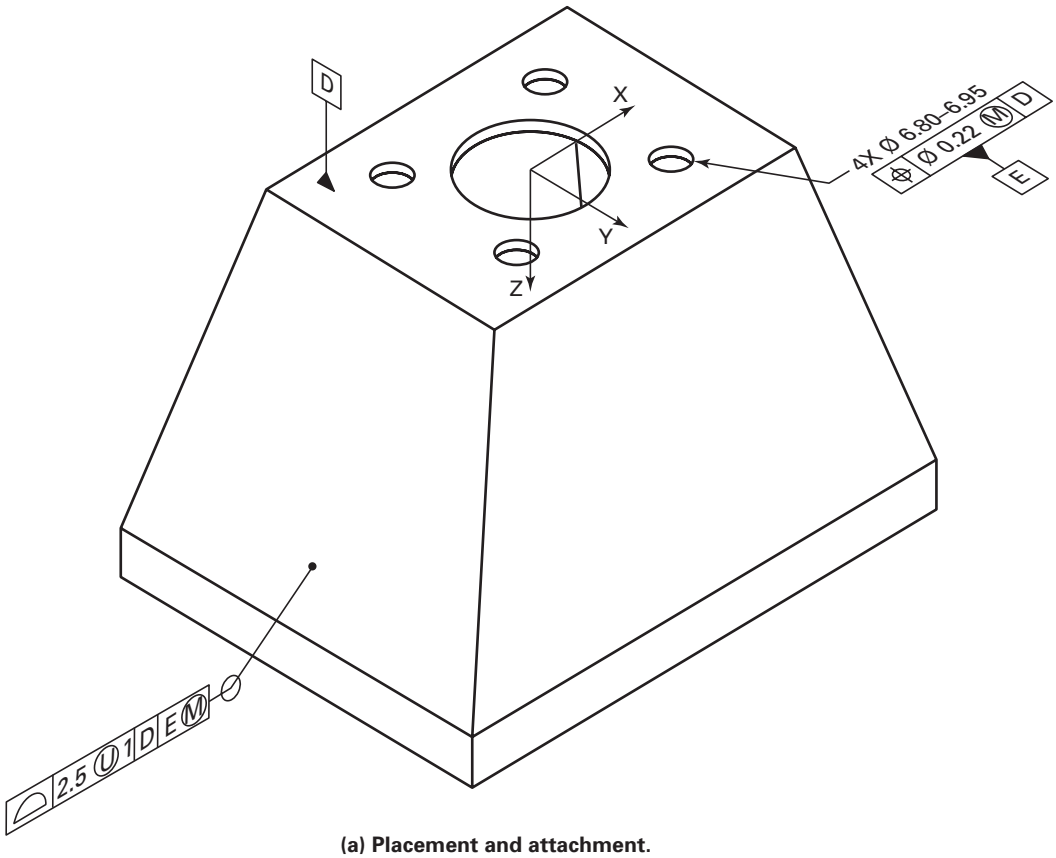

(a) Placement and attachment.

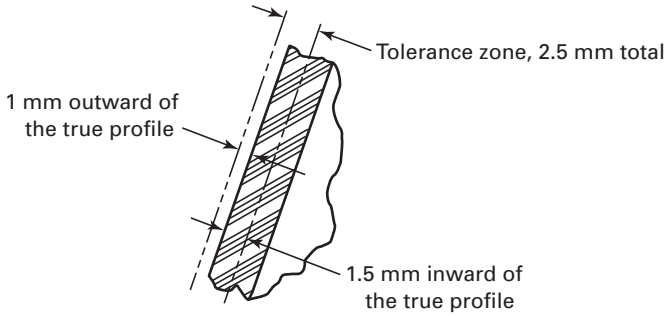

(b) Unequally disposed profile tolerance.

Table 10-3
10.2.3(f)

Fig. 10-19 Profile – Unequally Disposed

Copyright ASME International
Provided by IHS under license with ASME
No reproduction or networking permitted without license from IHS
Not for Resale

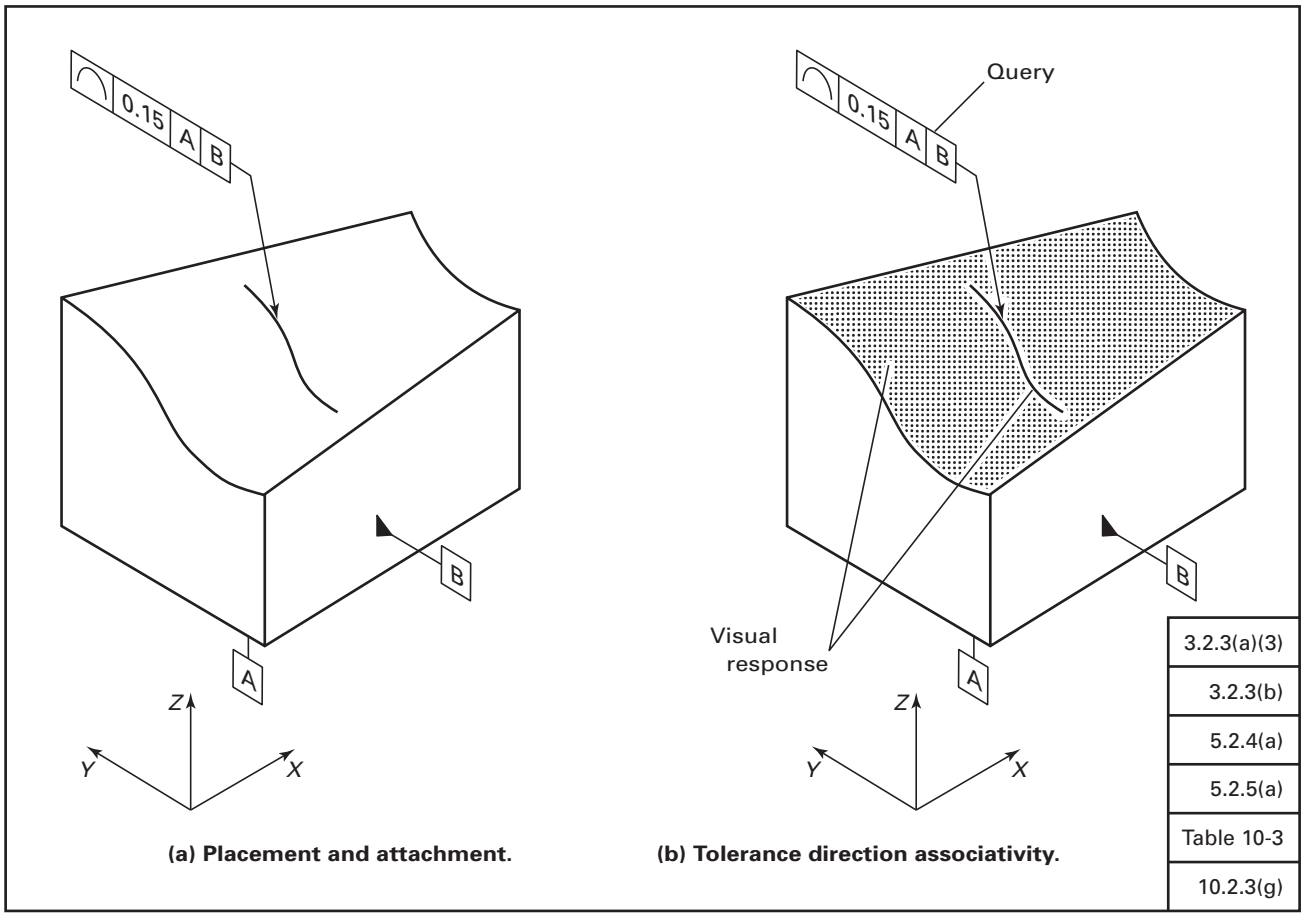

Fig. 10-20 Line Profile – Directed by Line Element

Copyright ASME International
Provided by IHS under license with ASME
No reproduction or networking permitted without license from IHS
Not for Resale

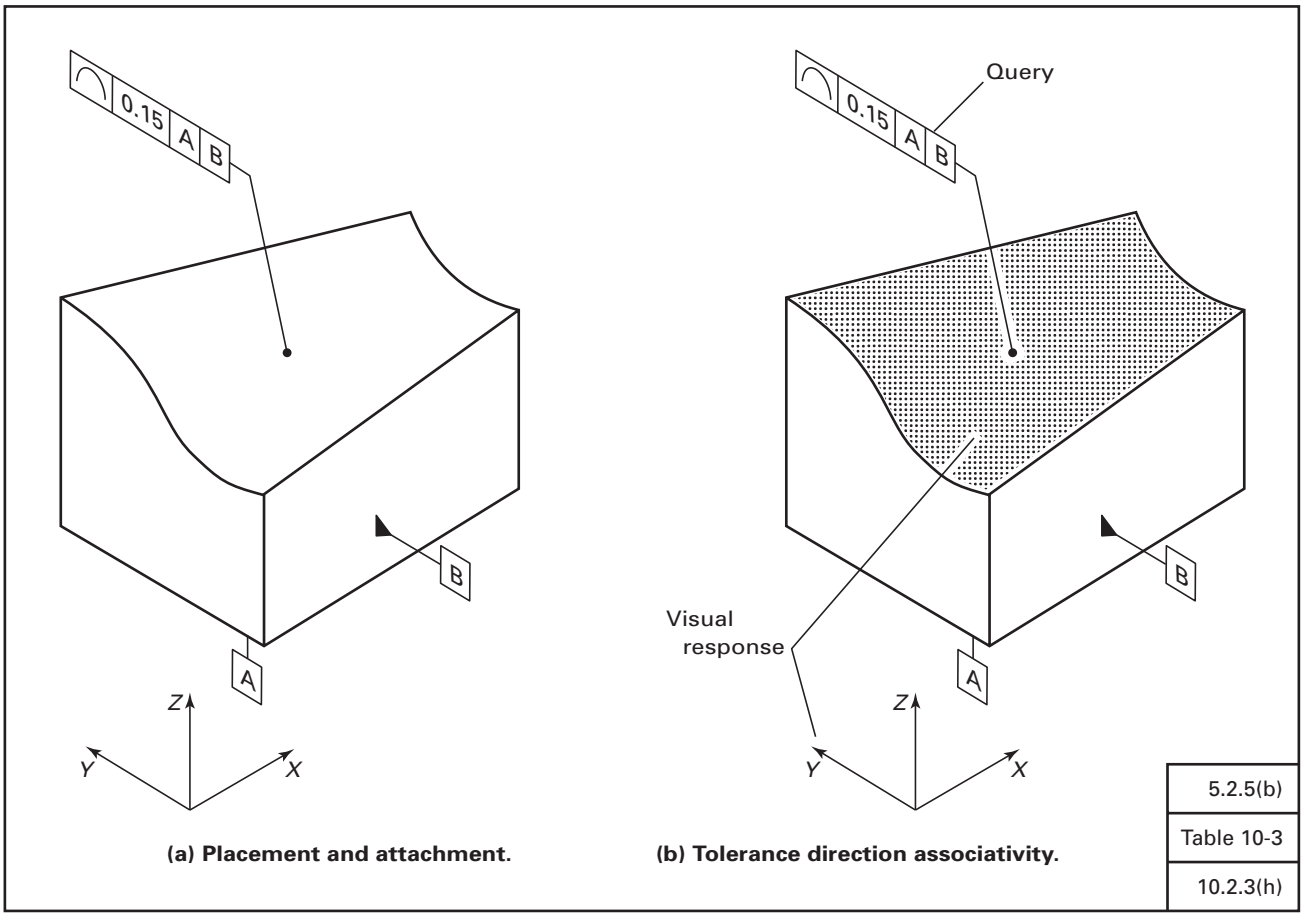

Fig. 10-21 Line Profile – Directed by Ordinate Axis

Copyright ASME International
Provided by IHS under license with ASME
No reproduction or networking permitted without license from IHS
Not for Resale

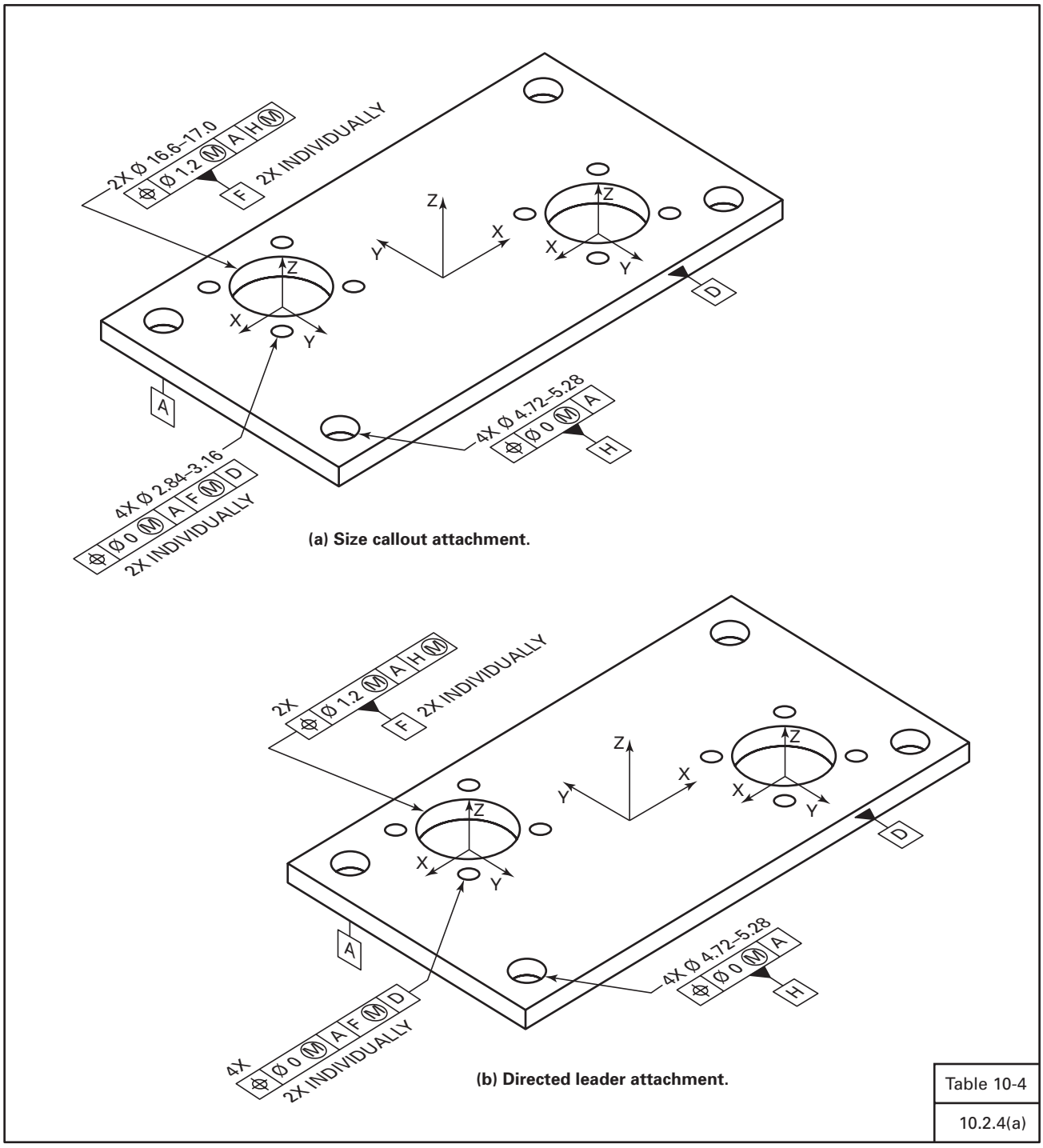

(a) Size callout attachment.

(b) Directed leader attachment.

Table 10-4
10.2.4(a)

Fig. 10-22 Position – Individual Patterns of Features

Copyright ASME International
Provided by IHS under license with ASME
No reproduction or networking permitted without license from IHS
Not for Resale

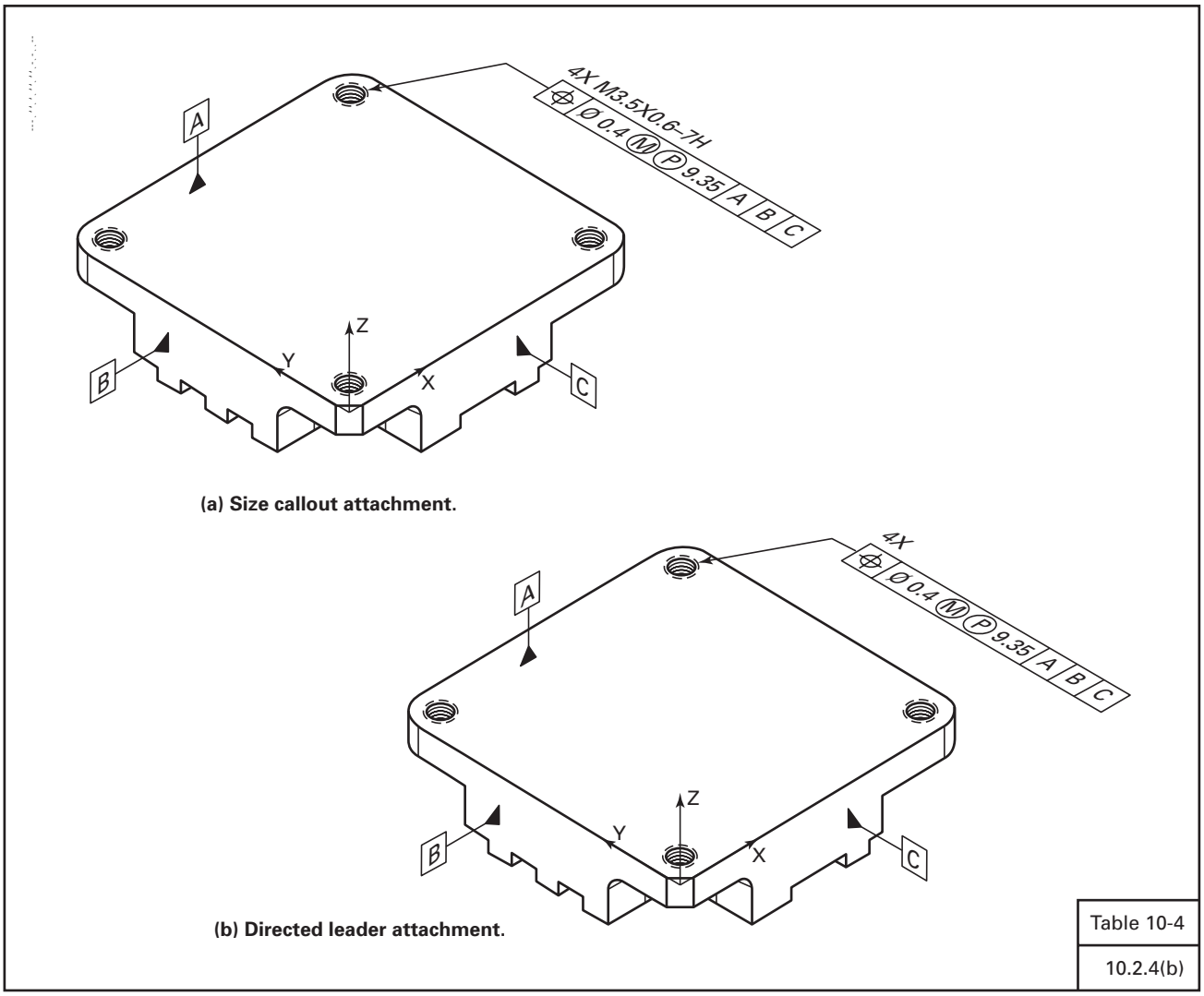

Fig. 10-23 Position – Projected Tolerance Zones

Copyright ASME International
Provided by IHS under license with ASME
No reproduction or networking permitted without license from IHS
Not for Resale

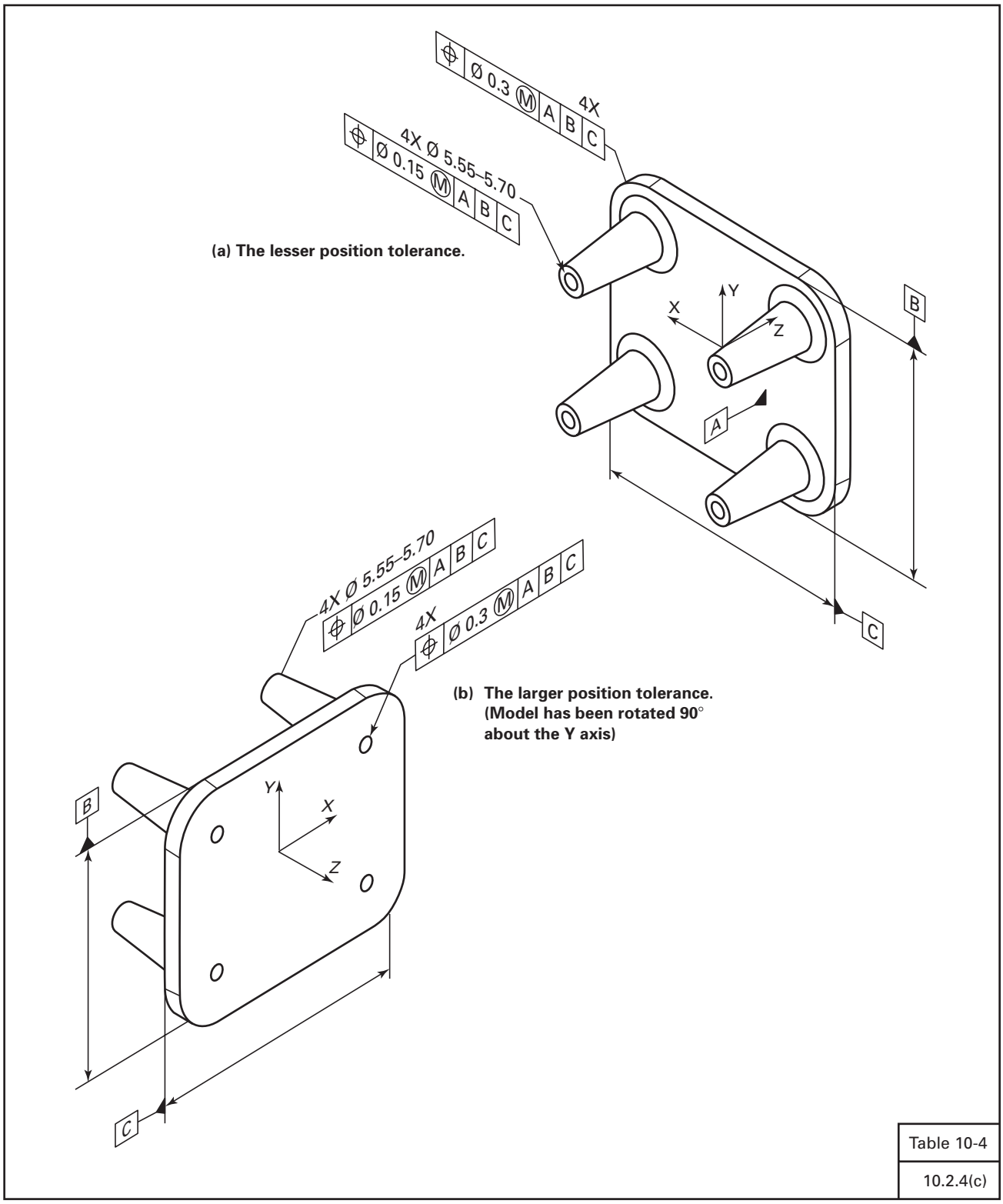

Table 10-4
10.2.4(c)

Fig. 10-24 Position – Extremities of Long Holes

Copyright ASME International
Provided by IHS under license with ASME
No reproduction or networking permitted without license from IHS
Not for Resale

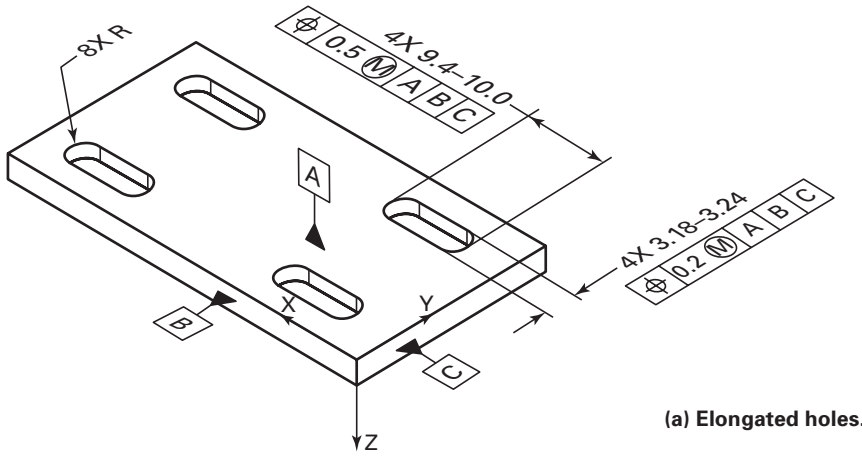

(a) Elongated holes.

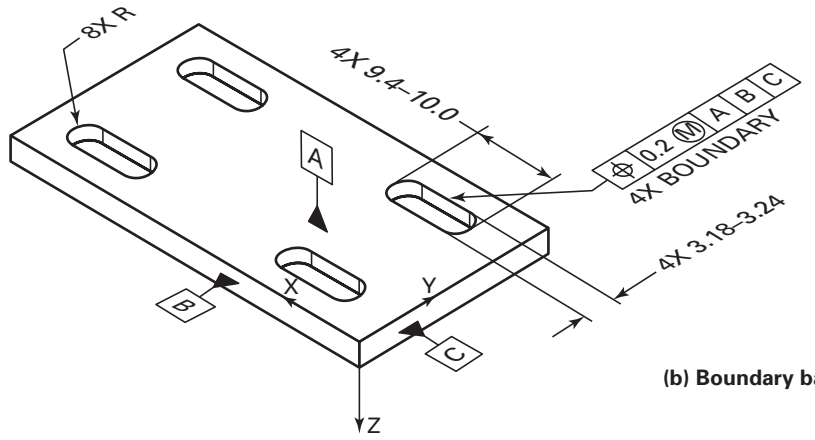

(b) Boundary basis, single tolerance.

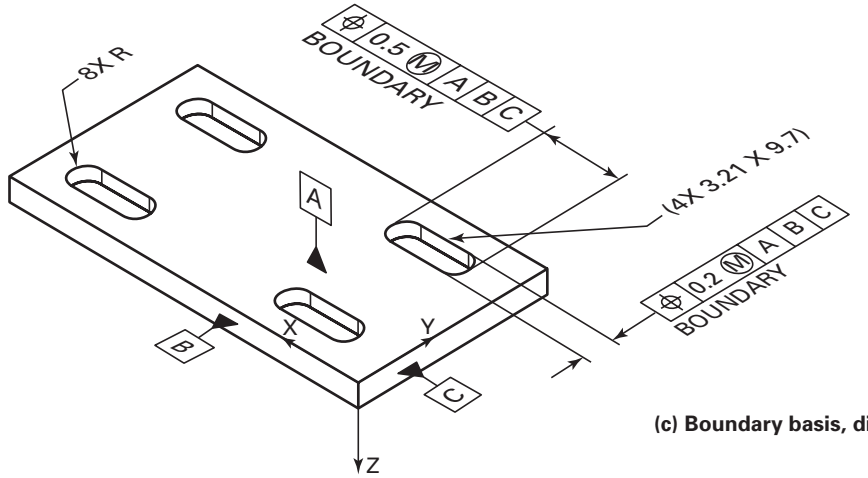

(c) Boundary basis, different tolerances.

Table 10-4

Fig. 10-25 Position – Elongated Holes (Slots)

Copyright ASME International
Provided by IHS under license with ASME
No reproduction or networking permitted without license from IHS
Not for Resale

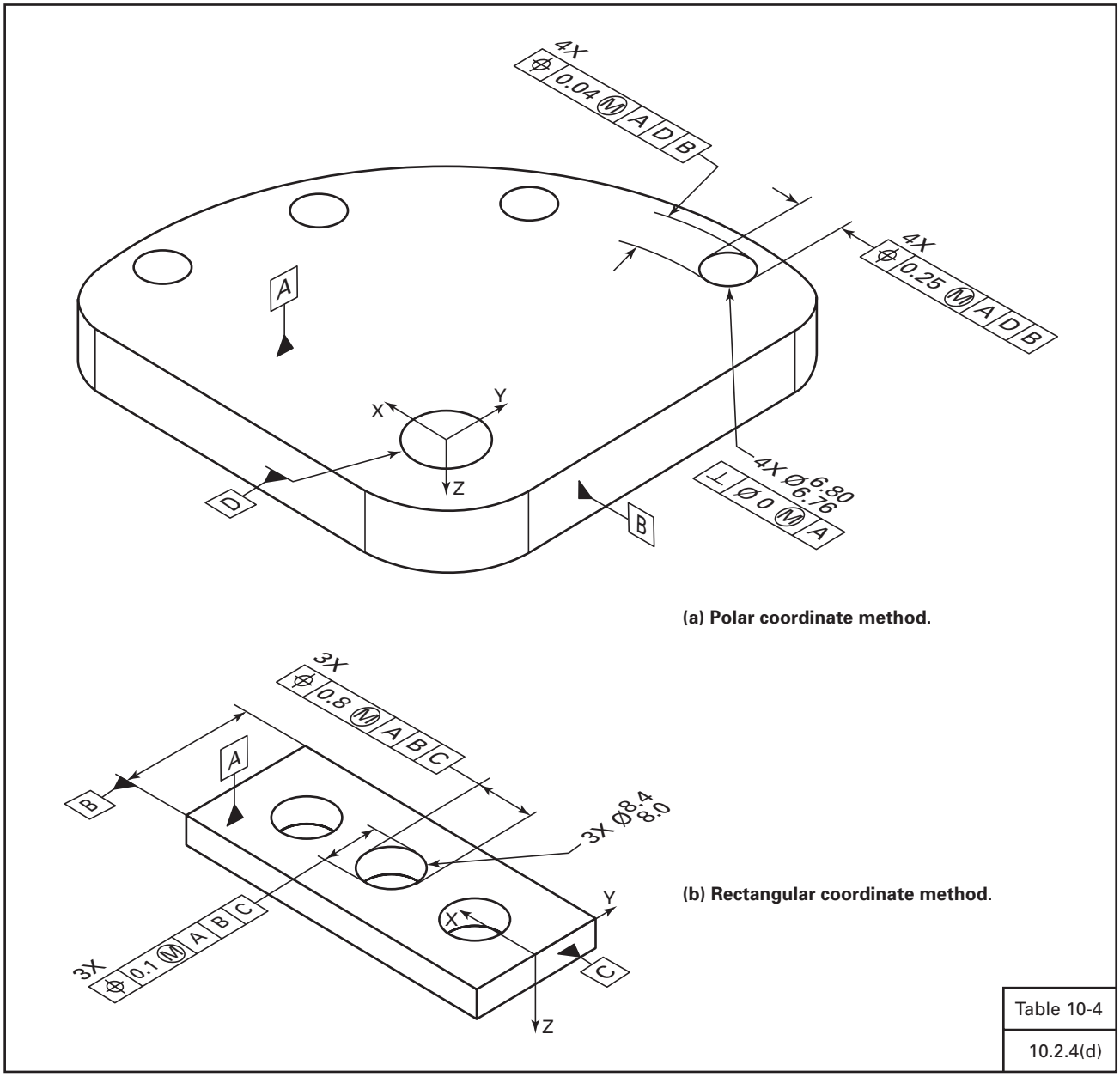

Fig. 10-26 Bi-directional Position – Polar or Rectangular

Copyright ASME International
Provided by IHS under license with ASME
No reproduction or networking permitted without license from IHS
Not for Resale

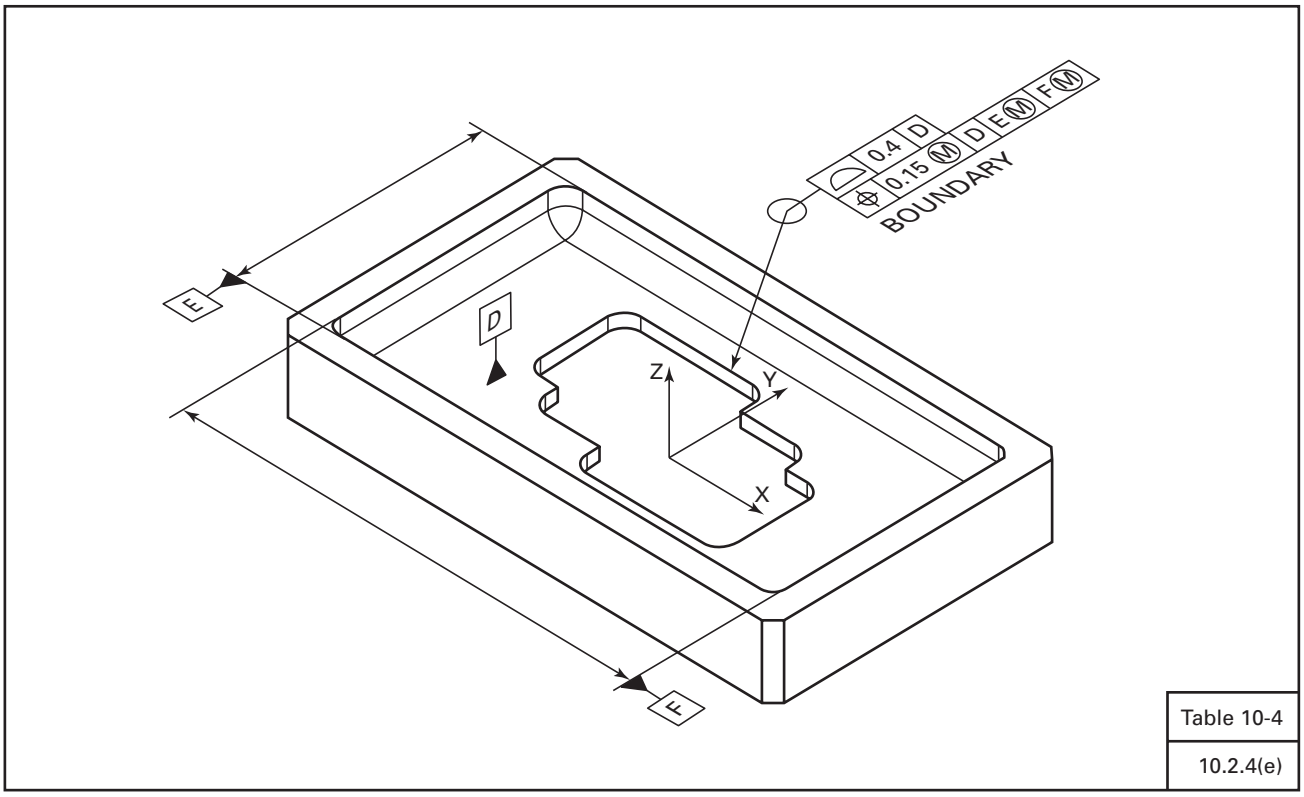

Fig. 10-27 Position – Combined with Profile

Copyright ASME International
Provided by IHS under license with ASME
No reproduction or networking permitted without license from IHS
Not for Resale

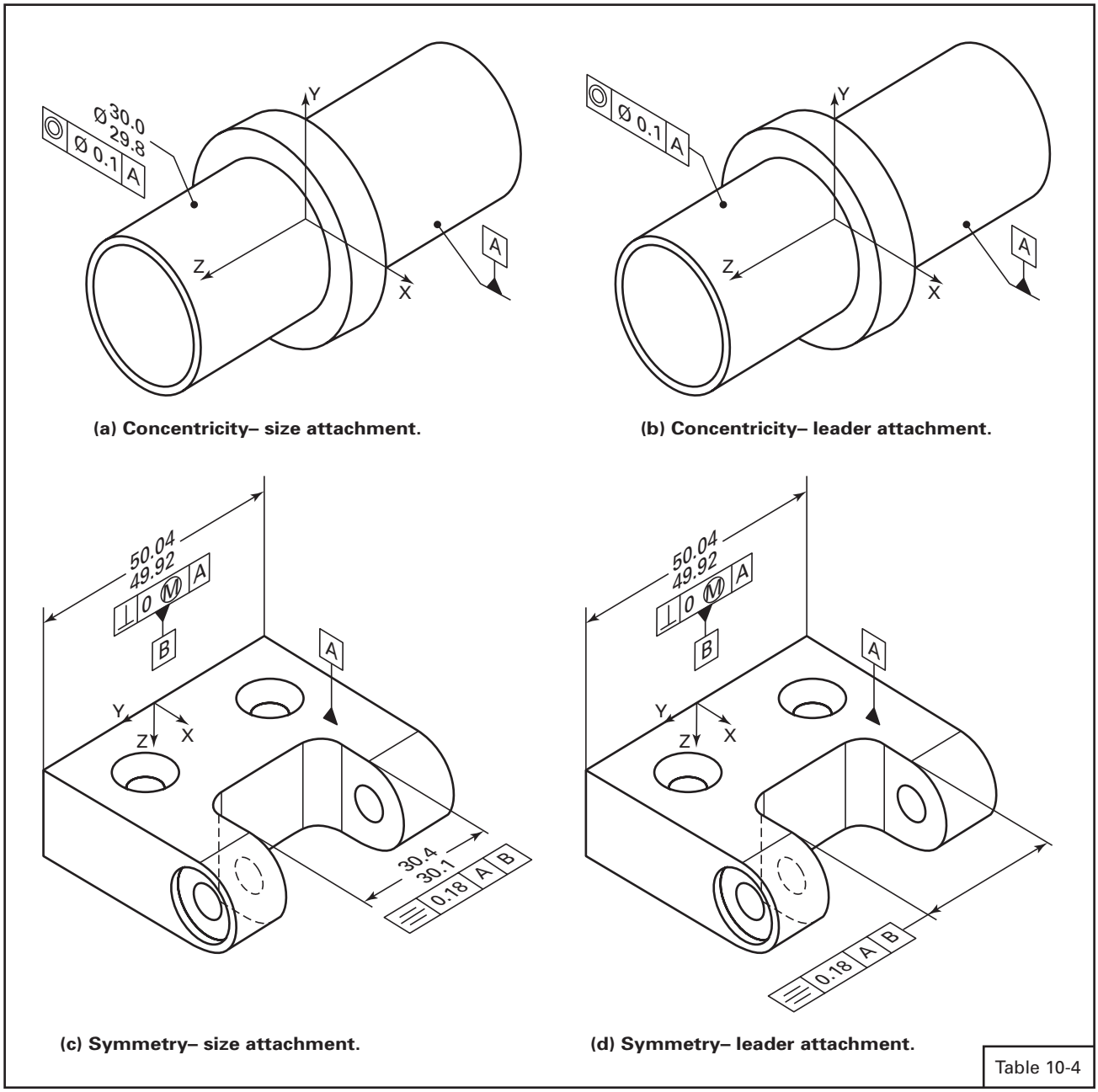

Fig. 10-28 Concentricity and Symmetry

Copyright ASME International
Provided by IHS under license with ASME
No reproduction or networking permitted without license from IHS
Not for Resale

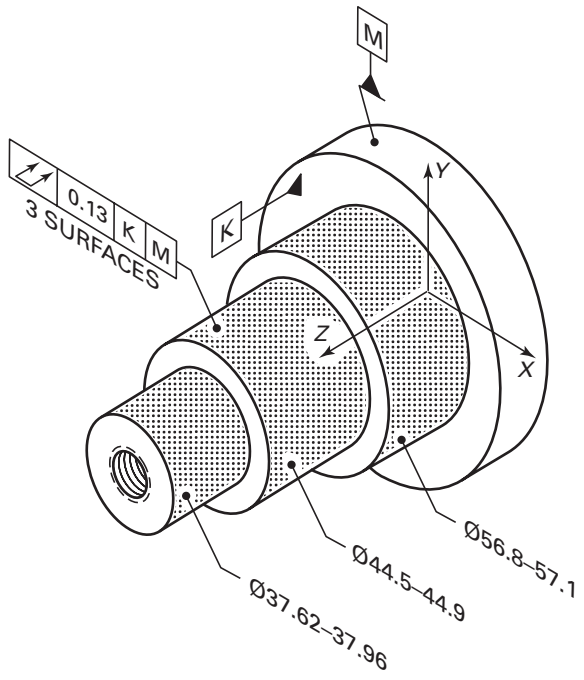

(a) Associated features of size.

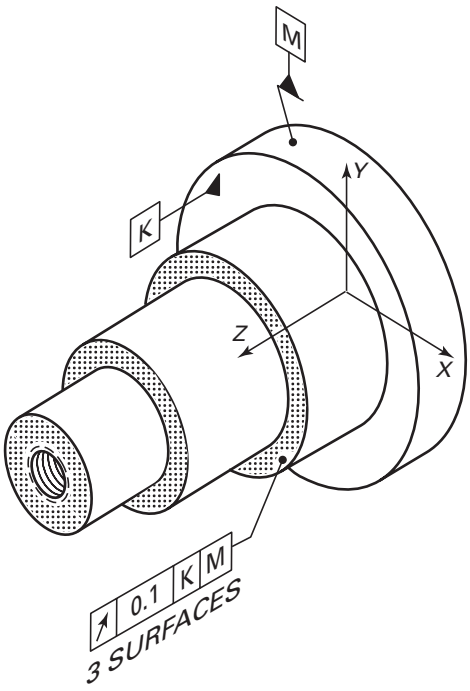

(b) Associated surfaces.

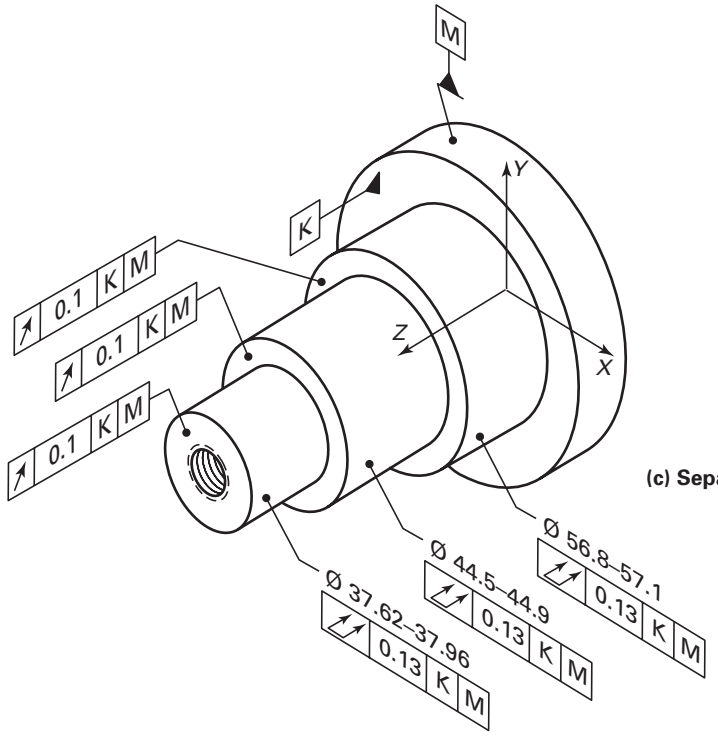

(c) Separate runout attachments.

Table 10-5
10.2.5(a)(1)
10.2.5(a)(3)

Fig. 10-29 Runout – Attachments and Associativity

Copyright ASME International
Provided by IHS under license with ASME
No reproduction or networking permitted without license from IHS
Not for Resale

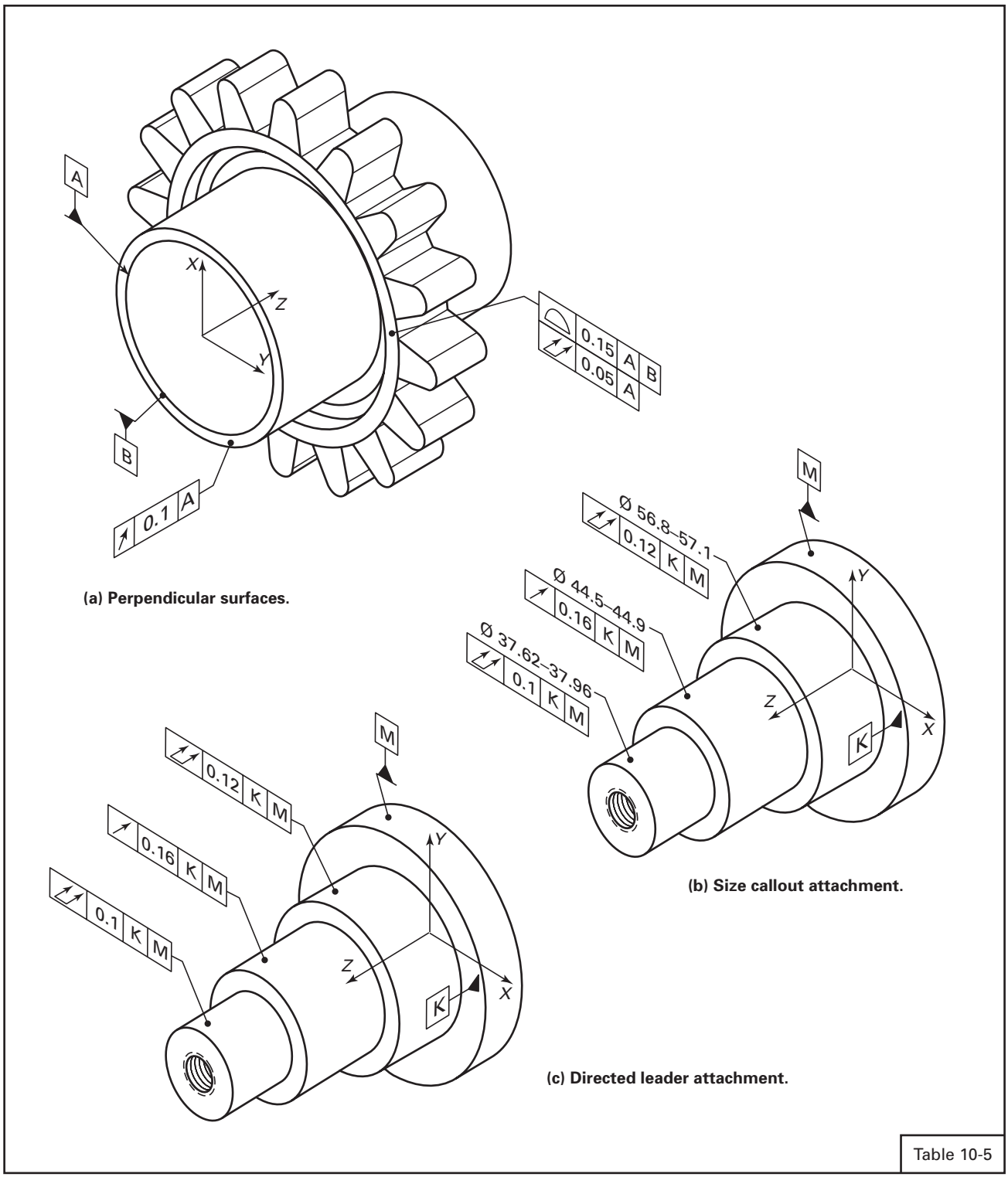

Fig. 10-30 Runout – Perpendicular and Cylindrical Surfaces

Copyright ASME International
Provided by IHS under license with ASME
No reproduction or networking permitted without license from IHS
Not for Resale

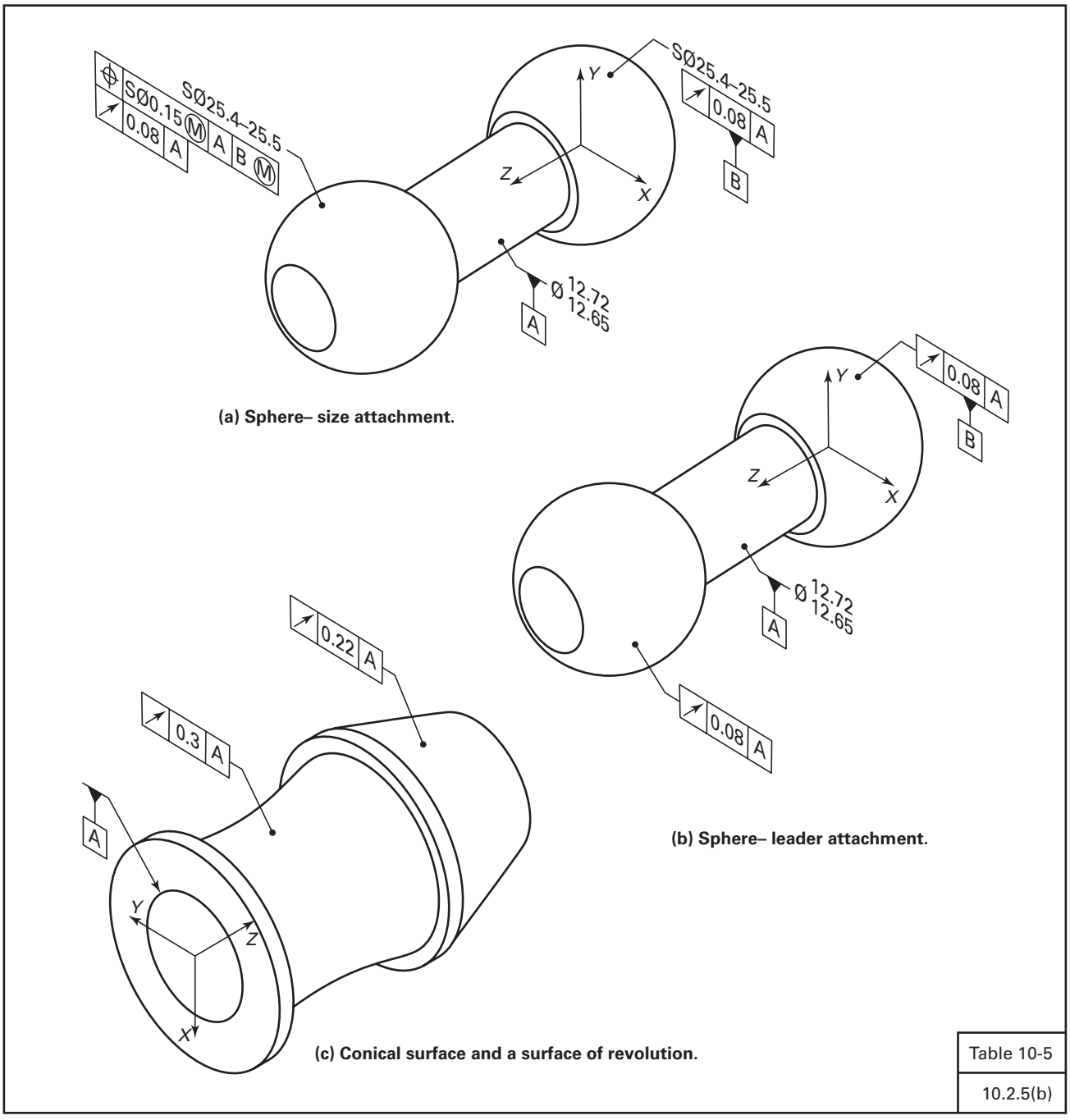

Fig. 10-31 Runout – Spherical, Conical, and Revolved Surfaces

Copyright ASME International
Provided by IHS under license with ASME
No reproduction or networking permitted without license from IHS
Not for Resale

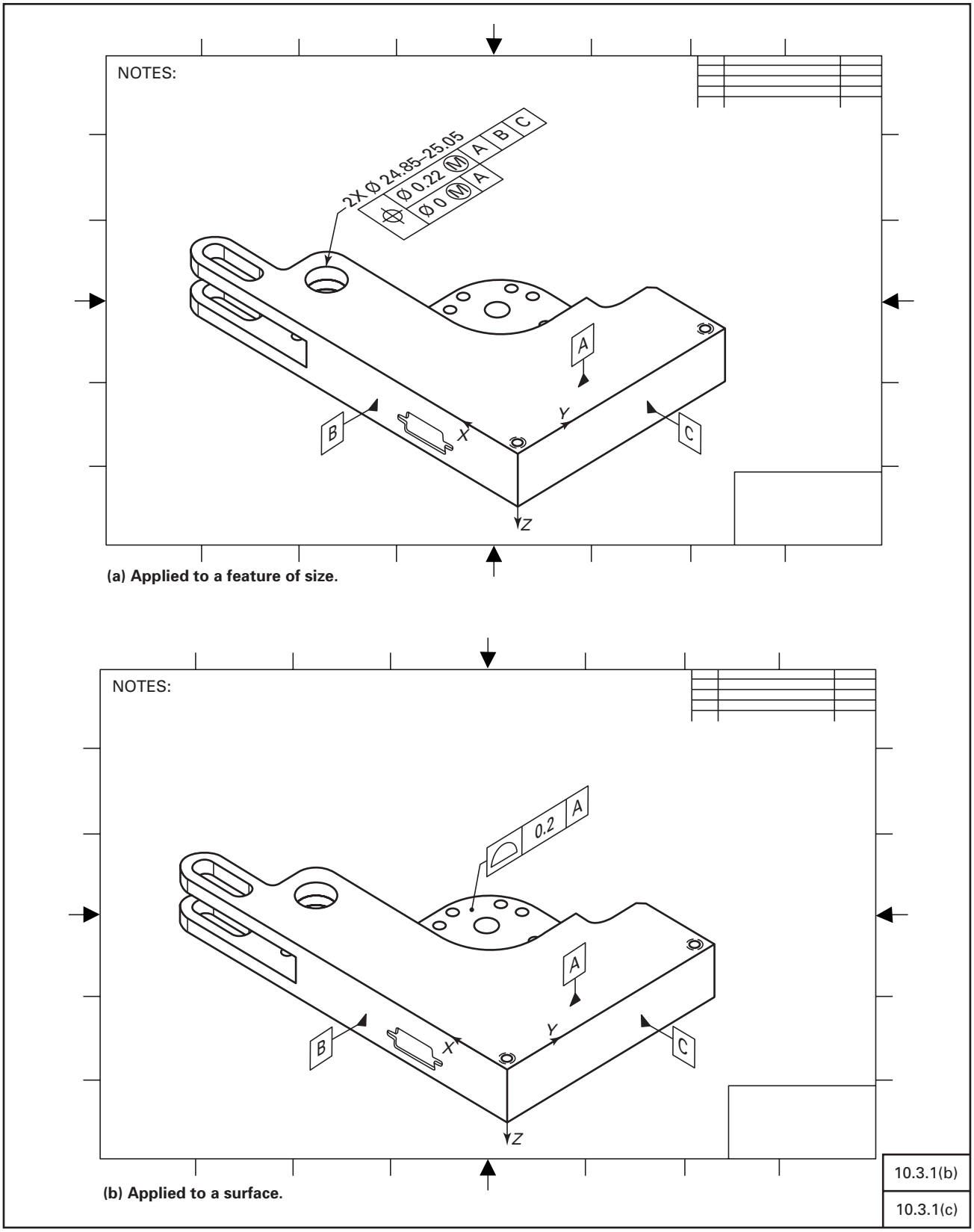

Fig. 10-32 Axonometric Views – Feature Control Frames

Copyright ASME International
Provided by IHS under license with ASME
No reproduction or networking permitted without license from IHS
Not for Resale

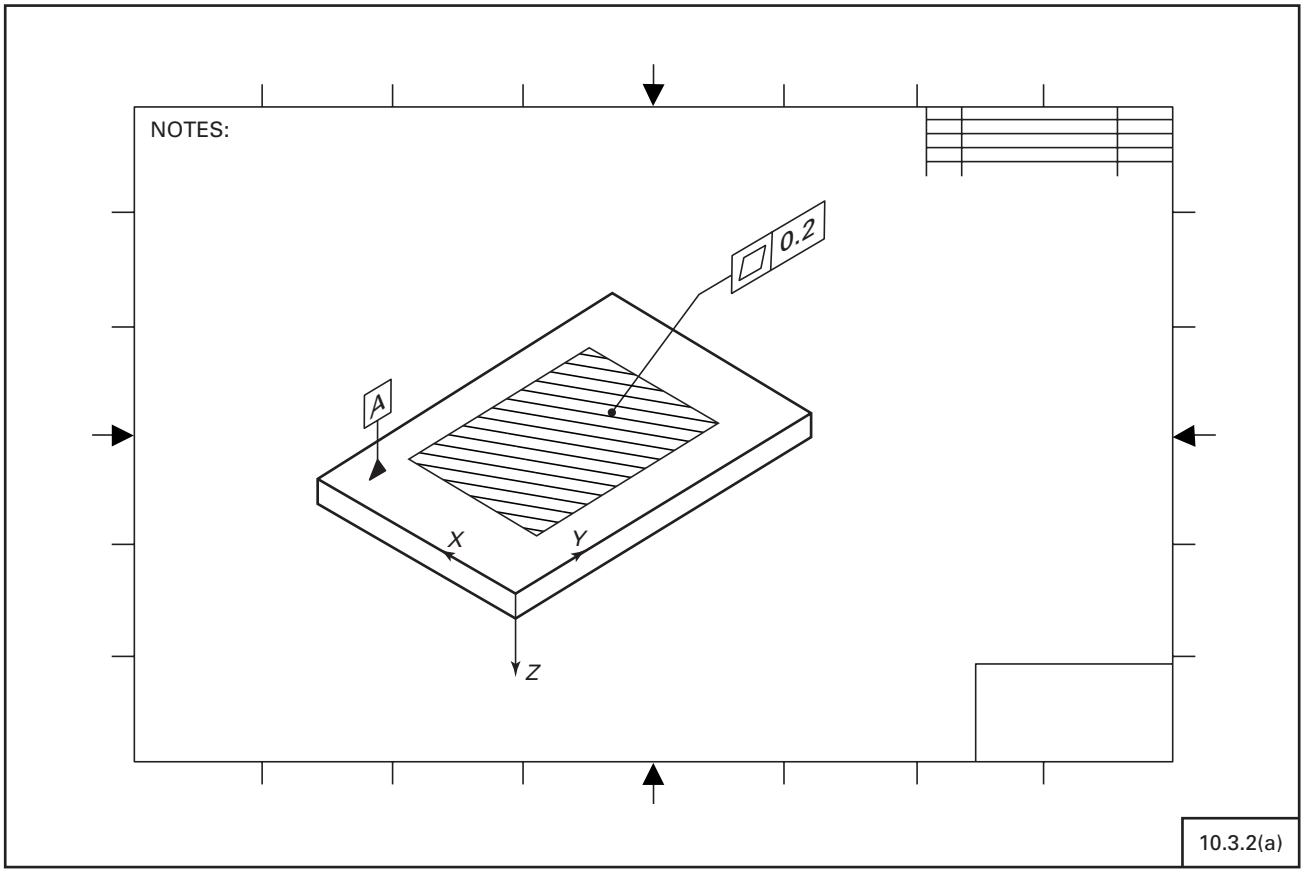

Fig. 10-33 Axonometric Views – Limited Area Application

Copyright ASME International
Provided by IHS under license with ASME
No reproduction or networking permitted without license from IHS Not for Resale

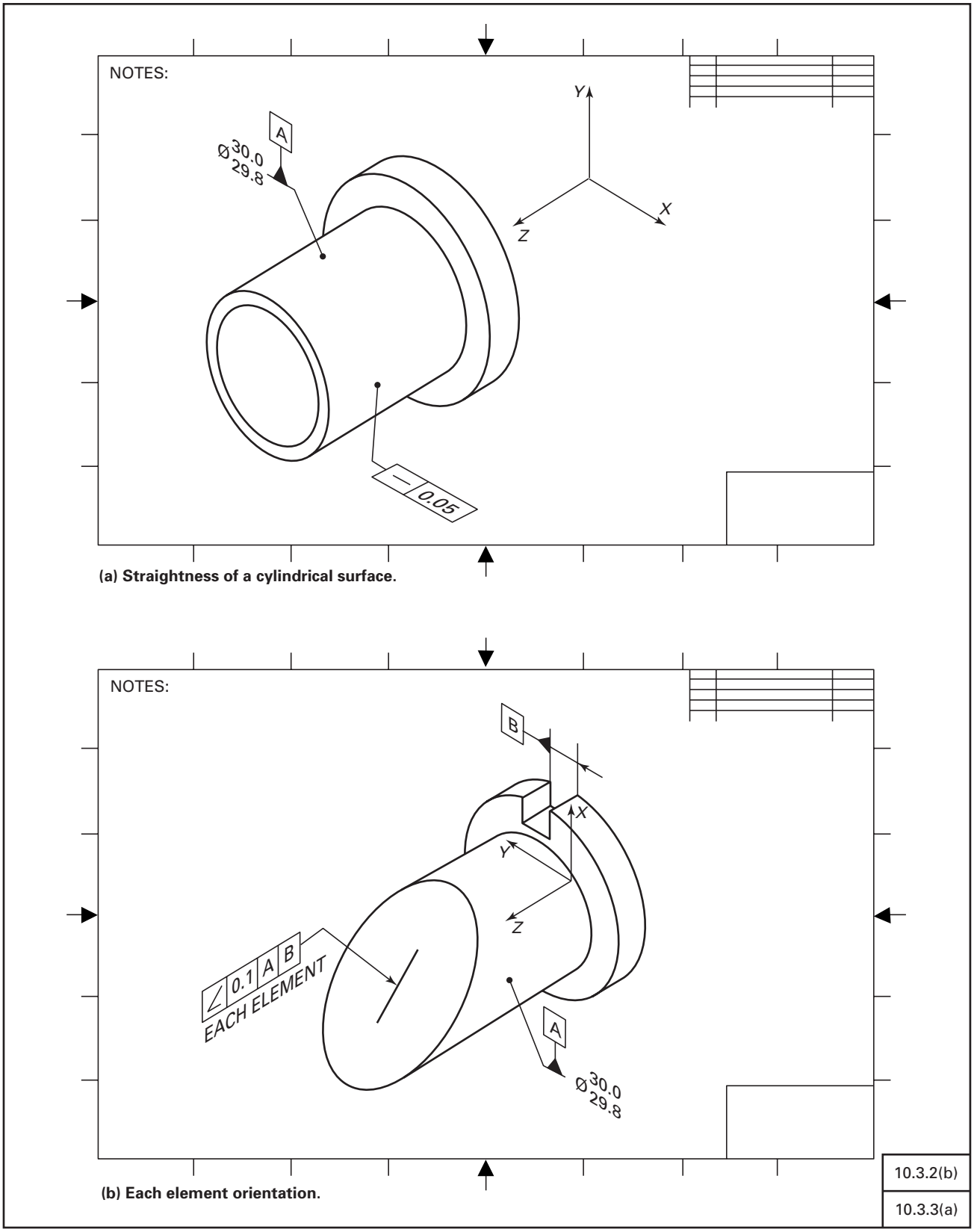

Fig. 10-34 Axonometric Views – Straightness, Each Element Applications

Copyright ASME International
Provided by IHS under license with ASME
No reproduction or networking permitted without license from IHS
Not for Resale

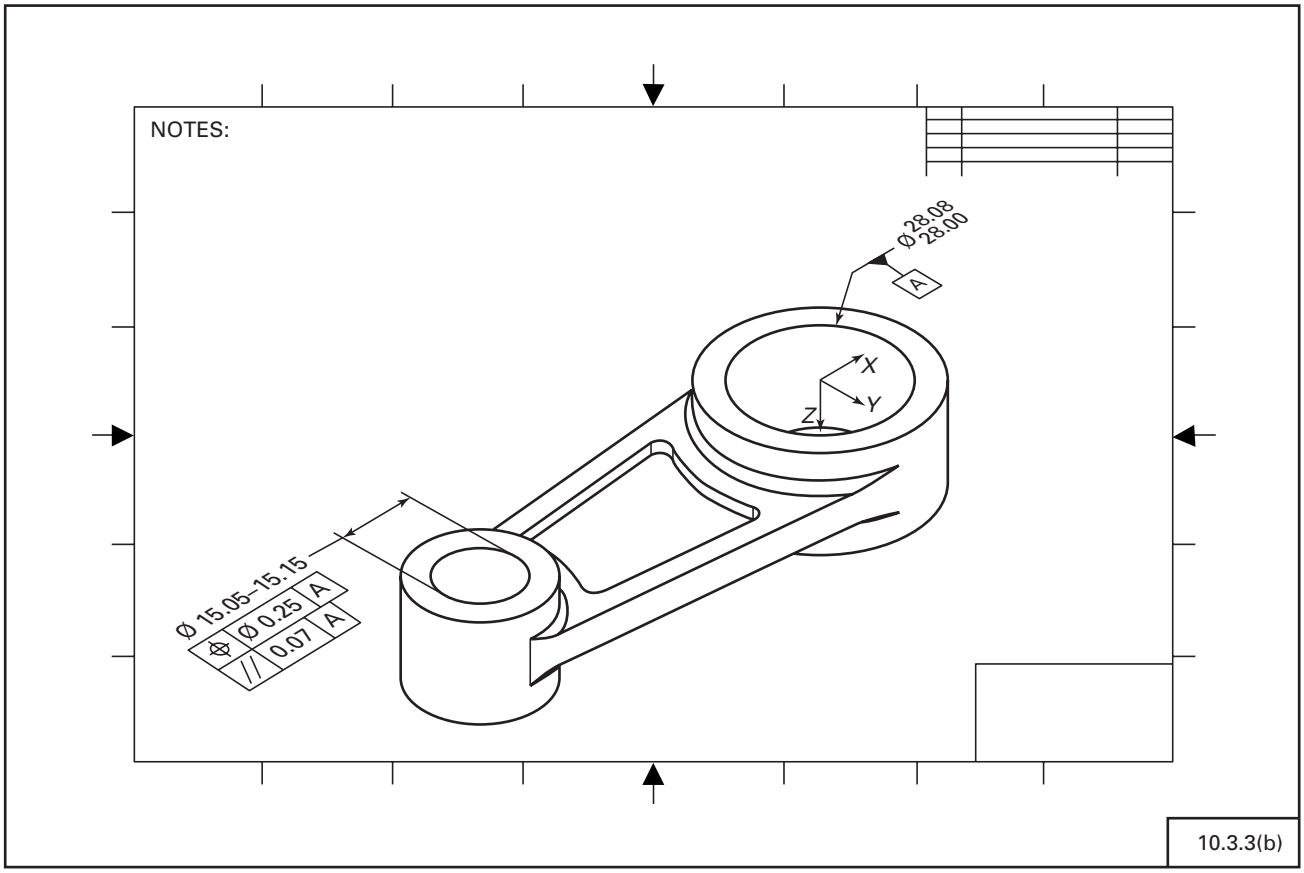

Fig. 10-35 Axonometric Views – Parallel Planes Tolerance Zone

Copyright ASME International
Provided by IHS under license with ASME
No reproduction or networking permitted without license from IHS
Not for Resale

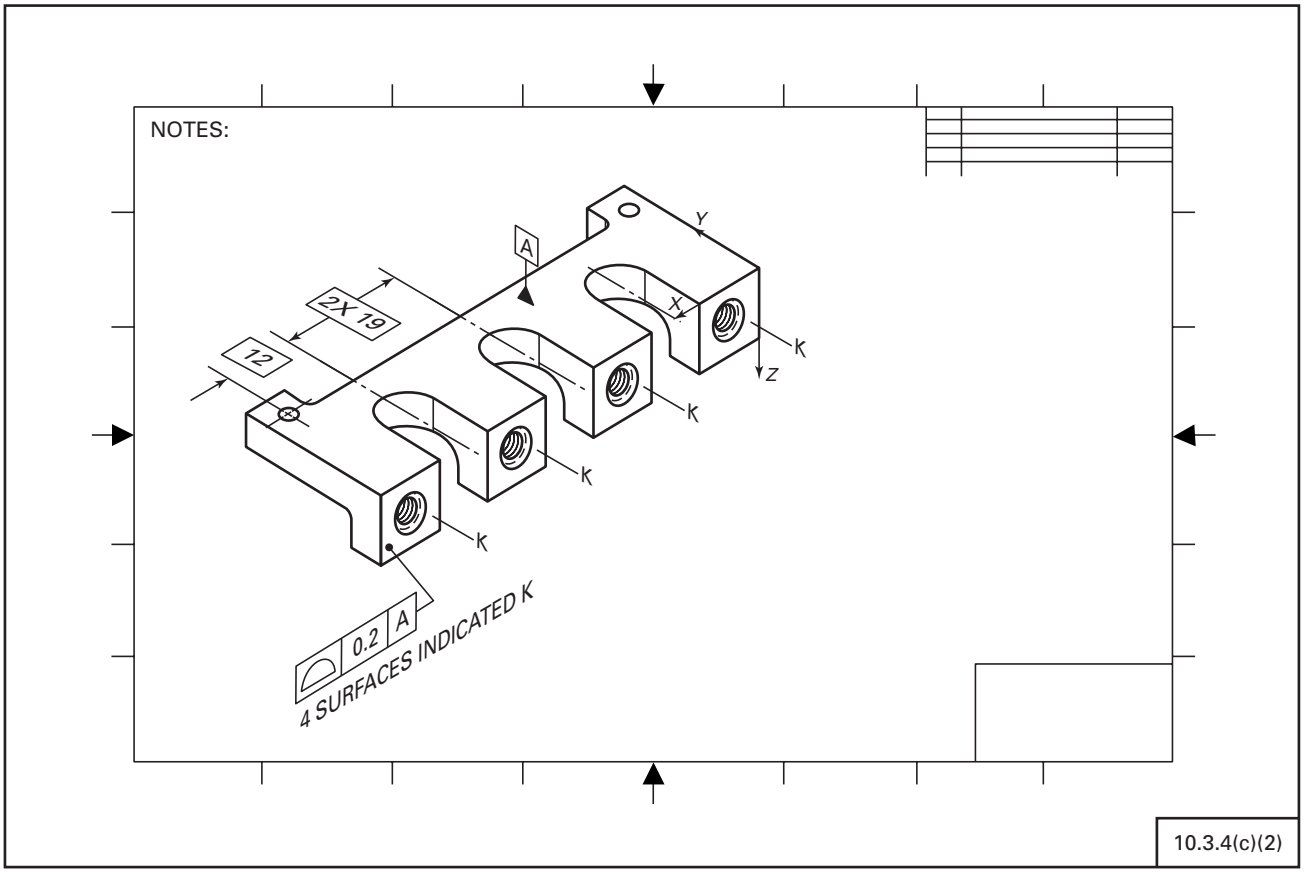

Fig. 10-36 Axonometric Views – Multiple Surfaces

Copyright ASME International
Provided by IHS under license with ASME
No reproduction or networking permitted without license from IHS
Not for Resale

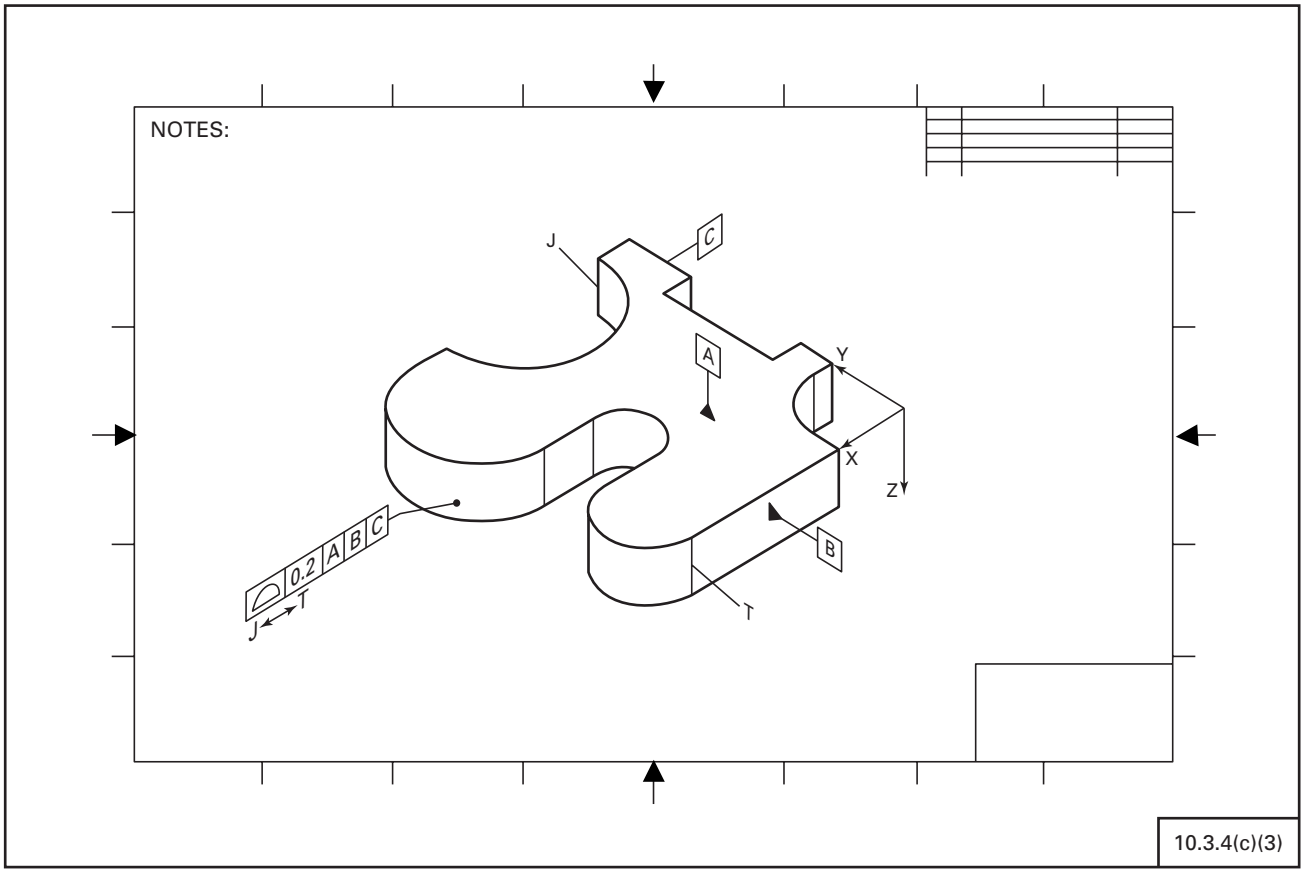

Fig. 10-37 Axonometric Views – Between Basis

Copyright ASME International
Provided by IHS under license with ASME
No reproduction or networking permitted without license from IHS
Not for Resale

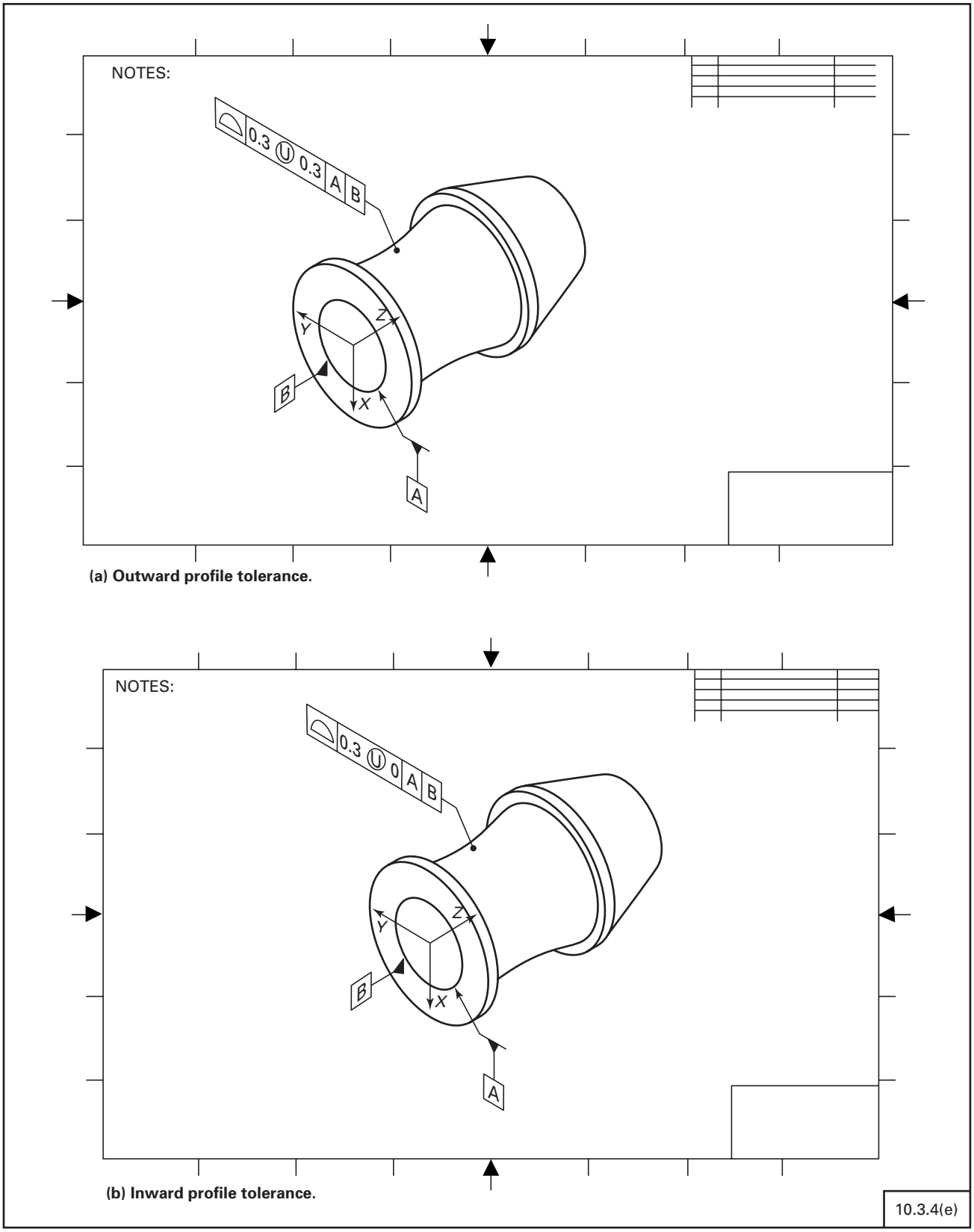

Fig. 10-38 Axonometric Views – Profile Unilaterally Disposed

Copyright ASME International
Provided by IHS under license with ASME
No reproduction or networking permitted without license from IHS
Not for Resale

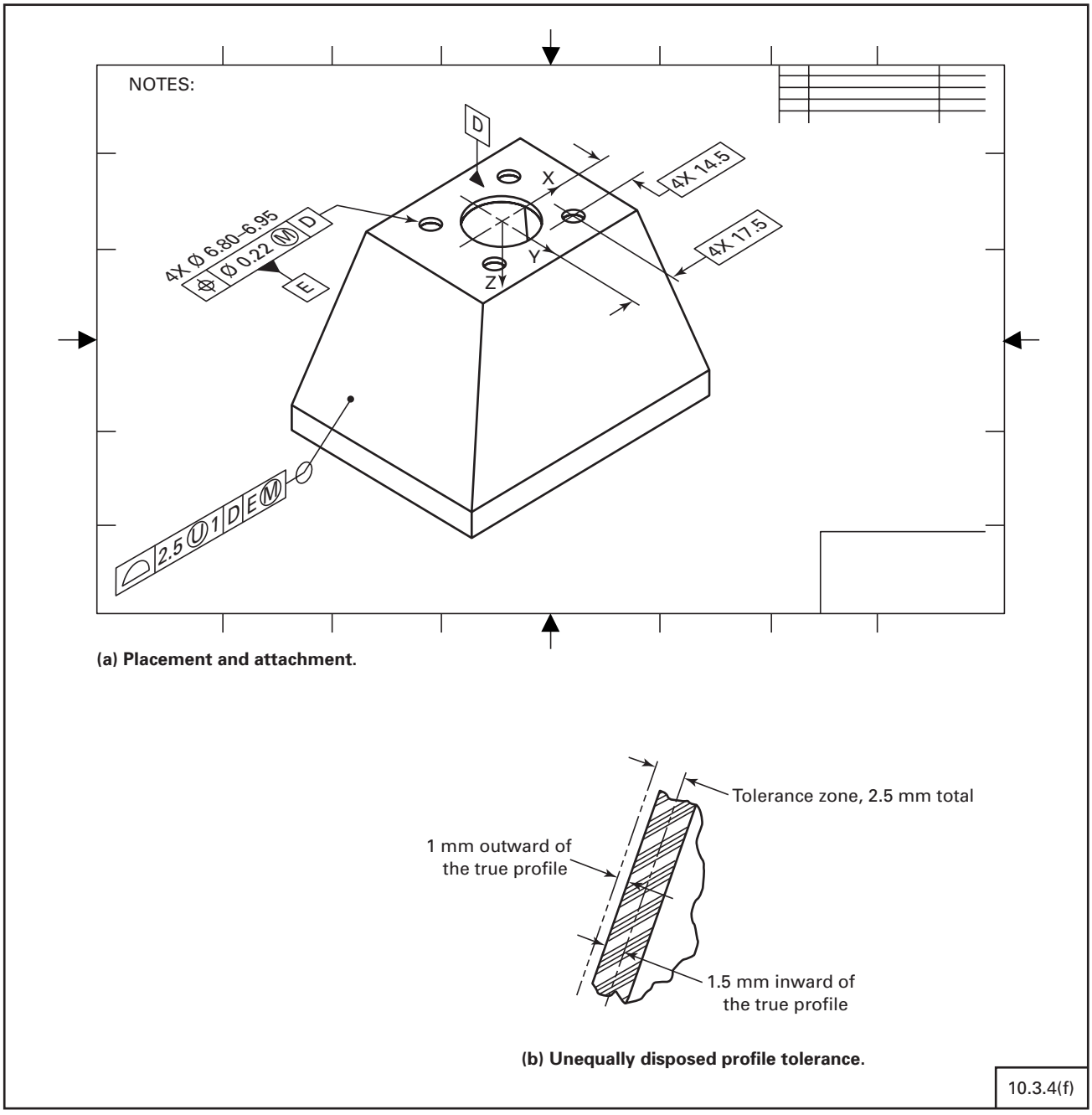

Fig. 10-39 Axonometric Views – Profile Unequally Disposed

Copyright ASME International
Provided by IHS under license with ASME
No reproduction or networking permitted without license from IHS
Not for Resale

MANDATORY APPENDIX I
SYMBOLS

Symbol	Usage	Paragraph	Figure
Ⓤ	PROFILE	10.2.3(e) 10.2.3(f) 10.3.4(e) 10.3.4(f)	10-18 10-19 10-38 10-39

The symbol "circle U" is introduced in this Standard to specify a geometrically controlled profile tolerance. The form and proportion of this symbol is to be the same as the geometric symbols used in ASME Y14.5M. For example:

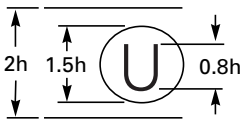

Profile
Unequally Disposed

Copyright ASME International
Provided by IHS under license with ASME
No reproduction or networking permitted without license from IHS
Not for Resale

RELATED DOCUMENTS

Engineering Drawing and Related Documentation Practices
- Decimal Inch Drawing Sheet Size and Format . . . . . Y14.1-1995(R2002)
- Metric Drawing Sheet Size and Format . . . . . Y14.1M-1995(R2002)
- Line Conventions and Lettering . . . . . Y14.2M-1992(R1998)
- Multiview and Sectional View Drawings . . . . . Y14.3M-1994(R1999)
- Pictorial Drawings . . . . . Y14.4M-1989(R1999)
- Dimensioning and Tolerancing . . . . . Y14.5M-1994(R1999)
- Mathematical Definition of Dimensioning and Tolerancing Principles . . . . . Y14.5.1M-1994(R1999)
- Certification of Geometric Dimensioning and Tolerancing Professionals Y14.5.2-2000
- Screw Thread Representation Y14.6-2001
- Gears and Splines
  - Spur, Helical, Double Helical and Racks . . . . . Y14.7.1-1971(R1998)
  - Bevel and Hypoid Gears . . . . . Y14.7.2-1978(R1999)
- Castings and Forgings . . . . . Y14.8M-1996(R2002)
- Mechanical Spring Representation . . . . . Y14.13M-1981(R1998)
- Optical Parts . . . . . Y14.18M-1986(R1998)
- Types and Applications of Engineering Drawings Y14.24-1999
- Chassis Frames — Passenger Car and Light Truck — Ground Vehicle Practices . . . . . Y14.32.1M-1994(R1999)
- Associated Lists . . . . . Y14.34M-1996(R2002)
- Revision of Engineering Drawings and Associated Documents Y14.35M-1997
- Surface Texture Symbols . . . . . Y14.36M-1996(R2002)
- Abbreviations and Acronyms Y14.38-1999
- Basic Rules for the Design of Graphical Symbols for Use in the Technical Documentation of Products Y14.40.0-2002
- Graphical Symbols for Diagrams, Part 2: Symbols Having General Applications Y14.40.2-2002
- Graphical Symbols for Diagrams, Part 3: Connections and Related Devices Y14.40.3-2002
- Graphical Symbols for Diagrams, Part 5: Measurement and Control Devices Y14.40.5-2002
- Graphical Symbols for Diagrams, Part 6: Measurement and Control Functions Y14.40.6-2002
- Graphical Symbols for Diagrams, Part 7: Basic Mechanical Components Y14.40.7-2002
- Graphical Symbols for Diagrams, Part 8: Valves and Dampers Y14.40.8-2002
- Graphical Symbols for Diagrams, Part 9: Pumps, Compressors, and Fans Y14.40.9-2002
- Digital Product Definition Data Practices Y14.41-2003
- Digital Approval Systems Y14.42-2002
- Dimensioning and Tolerancing Principles for Gages and Fixtures Y14.43-2003
- Engineering Drawing Practices Y14.100-2000

Graphic Symbols for:
- Plumbing Fixtures for Diagrams Used in Architecture and Building Construction . . . . . Y32.4-1977(R1999)
- Railroad Maps and Profiles . . . . . Y32.7-1972(R1999)
- Mechanical and Acoustical Elements as Used in Schematic Diagrams . . . . . Y32.18-1972(R1998)

The ASME Publications Catalog shows a complete list of all the Standards published by the Society. For a complimentary catalog, or the latest information about our publications, call 1-800-THE-ASME (1-800-843-2763).

Copyright ASME International
Provided by IHS under license with ASME
No reproduction or networking permitted without license from IHS
Not for Resale

ASME Services

ASME is committed to developing and delivering technical information. At ASME's Information Central, we make every effort to answer your questions and expedite your orders. Our representatives are ready to assist you in the following areas:

ASME Press
Codes & Standards
Credit Card Orders
IMechE Publications
Meetings & Conferences
Member Dues Status
Member Services & Benefits
Other ASME Programs
Payment Inquiries
Professional Development
Short Courses
Publications
Public Information
Self-Study Courses
Shipping Information
Subscriptions/Journals/Magazines
Symposia Volumes
Technical Papers

How can you reach us? It's easier than ever!

There are four options for making inquiries* or placing orders. Simply mail, phone, fax, or E-mail us and an Information Central representative will handle your request.

Mail
ASME
22 Law Drive, Box 2900
Fairfield, New Jersey
07007-2900

Call Toll Free
US & Canada: 800-THE-ASME
(800-843-2763)
Mexico: 95-800-THE-ASME
(95-800-843-2763)
Universal: 973-882-1167

Fax–24 hours
973-882-1717
973-882-5155

E-Mail–24 hours
Infocentral@asme.org

* Information Central staff are not permitted to answer inquiries about the technical content of this code or standard. Information as to whether or not technical inquiries are issued to this code or standard is shown on the copyright page. All technical inquiries must be submitted in writing to the staff secretary. Additional procedures for inquiries may be listed within.

--`,,`,,`-`-`,,`,,`,`,,`---

Copyright ASME International
Provided by IHS under license with ASME
No reproduction or networking permitted without license from IHS

Not for Resale

-- ` ` - ` - ` , , ` , , ` , ` , , ` ---

Copyright ASME International
Provided by IHS under license with ASME
No reproduction or networking permitted without license from IHS

Not for Resale

ISBN 0-7918-2810-7



N17103

Copyright ASME International
Provided by IHS under license with ASME
No reproduction or networking permitted without license from IHS

Not for Resale