NOTICE OF ADOPTION

ADOPTION NOTICE 1
17 JULY 1992 FOR
ASME Y14.2M-1992
SUPERSEDING
ANSI Y14.2M-1979
4 JANUARY 1979

ASME Y14.2M was adopted on 17 July 1992 and is approved for use by the Department of Defense (DoD). Copies of this document are stocked at the Standardization Documents Order Desk, Bldg 4D, 700 Robbins Avenue, Philadelphia, PA 19111-5094 for issue to DoD activities only. Other Government activities, contractors, private concerns, or other requestors must obtain the document from:

American Society of Mechanical Engineers
345 East 47th Street
New York, NY 10017

OR

American National Standards Institute
1430 Broadway
New York, NY 10018

TITLE OF DOCUMENT: Line Conventions and Lettering
DATE OF SPECIFIC ISSUE ADOPTED: 7 July 1992
RELEASING INDUSTRY GROUP: American Society of Mechanical Engineers

Custodians:
Army - AR
Navy - SA
Air Force - 16
DLA - DH

Military Coordinating Activity:
Army - AR

(Project DRPR-0323)

Review activities:
Army - AT, AV, CE, CR, EA, ER, MI, SC, SM, TE
Navy - AS, EC, MC, OS, SA, SH, TD, YD
Air Force - 11, 13, 14, 18, 19, 79, 90, 99
DLA - CS, ES, GS, IS
NSA - NS

User activities:
Army - GL, ME
Air Force - 68, 70, 71, 80, 84

AMSC N/A

AREA DRPR

DISTRIBUTION STATEMENT A. Approved for public release; distribution is unlimited.

Copyright ASME International
Provided by IHS under license with ASME
No reproduction or networking permitted without license from IHS
Not for Resale

ASME Y14.2M 92 ■ 0759670 0532854 529 ■

ENGINEERING DRAWING AND
RELATED DOCUMENTATION PRACTICES

ASME Y14.2M-1992
(REVISION OF ANSI Y14.2M-1979)

Line Conventions and Lettering



AN AMERICAN NATIONAL STANDARD

The American Society of Mechanical Engineers

Copyright ASME International
Provided by IHS under license with ASME
No reproduction or networking permitted without license from IHS

Not for Resale

NOTICE OF ADOPTION

ADOPTION NOTICE 1
17 JULY 1992 FOR
ASME Y14.2M-1992
SUPERSEDING
ANSI Y14.2M-1979
4 JANUARY 1979

ASME Y14.2M was adopted on 17 July 1992 and is approved for use by the Department of Defense (DoD). Copies of this document are stocked at the Standardization Documents Order Desk, Bldg 4D, 700 Robbins Avenue, Philadelphia, PA 19111-5094 for issue to DoD activities only. Other Government activities, contractors, private concerns, or other requestors must obtain the document from:

American Society of Mechanical Engineers
345 East 47th Street
New York, NY 10017

OR

American National Standards Institute
1430 Broadway
New York, NY 10018

TITLE OF DOCUMENT: Line Conventions and Lettering
DATE OF SPECIFIC ISSUE ADOPTED: 7 July 1992
RELEASING INDUSTRY GROUP: American Society of Mechanical Engineers

Custodians:
Army - AR
Navy - SA
Air Force - 16
DLA - DH

Military Coordinating Activity:
Army - AR

(Project DRPR-0323)

Review activities:
Army - AT, AV, CE, CR, EA, ER, MI, SC, SM, TE
Navy - AS, EC, MC, OS, SA, SH, TD, YD
Air Force - 11, 13, 14, 18, 19, 79, 90, 99
DLA - CS, ES, GS, IS
NSA - NS

User activities:
Army - GL, ME
Air Force - 68, 70, 71, 80, 84

AMSC N/A AREA DRPR

DISTRIBUTION STATEMENT A. Approved for public release; distribution is unlimited.

Copyright ASME International
Provided by IHS under license with ASME
No reproduction or networking permitted without license from IHS
Not for Resale

AN AMERICAN NATIONAL STANDARD

ENGINEERING DRAWING AND RELATED DOCUMENTATION PRACTICES

Line Conventions and Lettering

ASME Y14.2M-1992

(REVISION OF ANSI Y14.2M-1979)

The American Society of Mechanical Engineers

345 East 47th Street, New York, N.Y. 10017

Copyright ASME International
Provided by IHS under license with ASME
No reproduction or networking permitted without license from IHS

Not for Resale

Date of Issuance: April 30, 1993

This Standard will be revised when the Society approves the issuance of a new edition. There will be no addenda or written interpretations of the requirements of this Standard issued to this Edition.

ASME is the registered trademark of The American Society of Mechanical Engineers.

This code or standard was developed under procedures accredited as meeting the criteria for American National Standards. The Consensus Committee that approved the code or standard was balanced to assure that individuals from competent and concerned interests have had an opportunity to participate. The proposed code or standard was made available for public review and comment which provides an opportunity for additional public input from industry. academia, regulatory agencies, and the public-at-large.

ASME does not "approve," "rate," or "endorse" any item, construction, proprietary device, or activity.

ASME does not take any position with respect to the validity of any patent rights asserted in connection with any items mentioned in this document. and does not undertake to insure anyone utilizing a standard against liability for infringement of any applicable Letters Patent, nor assume any such liability. Users of a code or standard are expressly advised that determination of the validity of any such patent rights, and the risk of infringement of such rights, is entirely their own responsibility.

Participation by federal agency representative(s) or person(s) affiliated with industry is not to be interpreted as government or industry endorsement of this code or standard.

ASME accepts responsibility for only those interpretations issued in accordance with governing ASME procedures and policies which preclude the issuance of interpretations by individual volunteers.

No part of this document may be reproduced in any form,
in an electronic retrieval system or otherwise.
without the prior written permission of the publisher.

Copyright © 1993 by
THE AMERICAN SOCIETY OF MECHANICAL ENGINEERS
All Rights Reserved
Printed in U.S.A.

Copyright ASME International
Provided by IHS under license with ASME
No reproduction or networking permitted without license from IHS

Not for Resale

FOREWORD

(This Foreword is not a part of ASME Y14.2M-1992.)

This Standard is a revision of ANSI Y14.2-1987, Line Conventions and Lettering, which was a reaffirmed version of the 1979 issue. It was prepared by Subcommittee 2 of the ASME Standards Committee Y14, Engineering Drawing and Related Documentation Practices. The successful completion of this revision is attributed to the Subcommittee members, the support of their respective companies/organizations, and the U. S. Department of Defense departments and agencies that participated in the review process.

Work on this revision began at a meeting in Denver, Colorado on May 10, 1990. Through subsequent meetings on October 15 and 16, 1990 in Charlotte, North Carolina; May 7 and 8, 1991 in Las Vegas, Nevada; October 22 and 23 in Minneapolis, Minnesota; May 21, 1992 in Sarasota, Florida; and through correspondence, a draft was prepared and submitted for approval as an American National Standard.

The following is a summary of the significant changes made in the 1979 edition of this Standard.

(a) The Standard was completely metricated. Decimal inch sizes are now given in mandatory Appendix I.

(b) The complexity of character heights was reduced from ten to three for both metric and decimal inch drawings.

(c) Character proportions were developed to accommodate the drawing forms specified in ASME Y14.1M-1992.

(d) An optional vertical line for the grouping of callout information has been added.

(e) Two additional arrowhead options have been added to accommodate CAD drawings.

(f) The mandatory requirement for section lining has been removed due to poor reproduction quality. Section lining is no longer recommended.

(g) Specific section lining symbols have been removed.

(h) The capitol letter "I" has been revised to distinguish it from the number 1, and the zero has been given an option to use a forward slash through the zero to distinguish it from the letter "O".

(i) Recommended line widths were changed.

Suggestions for improvement of this Standard are welcome. They should be sent to The American Society of Mechanical Engineers, Secretary, Y14 Main Committee, 345 East 47th Street, New York, NY 10017.

This revision was approved as an American National Standard on July 7, 1992.

Copyright ASME International
Provided by IHS under license with ASME
No reproduction or networking permitted without license from IHS
Not for Resale

ASME STANDARDS COMMITTEE Y14
Engineering Drawing and Related Documentation Practices

(The following is the roster of the Committee at the time of approval of this Standard.)

OFFICERS

P. E. McKim, *Chairman*
F. Bakos Jr., *Vice Chairman*
C. J. Gomez, *Secretary*

COMMITTEE PERSONNEL

A. R. Anderson, GM Powertrain, General Motors Corp.
F. Bakos Jr., Eastman Kodak Co.
D. E. Bowerman, Copeland Corp.
J. V. Burleigh, The Boeing Co.
L. Burns
R. A. Chadderdon, Southwest Consultants
T. Chleboski, U. S. Department of the Army, ARDEC
F. A. Christiana, ABB Combustion Engineering Systems
M. E. Curtis, Rexnord Corp.
H. L. Dubocq
L. W. Foster, L. W. Foster Associates, Inc.
E.L. Kardas, Pratt & Whitney CEB
C. G. Lance, Santa Cruz Technology Center
W. J. McGee, National Standards Educators Assoc.
P. E. McKim, Caterpillar Inc.
R. L. Mueller, GE Aircraft Engines
E. Niemiec, Westinghouse Electric Corp.
L. J. Phillips, United Technologies Corp.
R. J. Polizzi
D. L. Ragon, Deere & Co., John Deere Dubuque Works
J. P. Schmidt, Ford Motor Co.
R. L. Tennis, Caterpillar Inc.
R. P. Tremblay, *Alternate,* U. S. Department of the Army, ARDEC
R. K. Walker, Westinghouse Marine
G. H. Whitmire, TEC/TREND
K. Wiegandt, Sandia National Laboratory

SUBCOMMITTEE 2 — LINE CONVENTIONS AND LETTERING

J. P. Schmidt, *Chairman,* Ford Motor Co.
D. E. Bowerman, Copeland Corp.
J. V. Burleigh, The Boeing Co.
J. L. Burns, Consolidated Aviation Technologies
F. A. Christiana, ABB Combustion Engineering Systems
R. W. DeBolt, Motorola Inc., Government Electronics Group
H. L. DuBocq
J. A. Foss, General Electric Co., Aircraft Engine Group
J. E. Lopez, IBM Corp., Federal Sector Division
L. Sandoval, U. S. Department of the Air Force, AFLC/MMDBP
R. P. Tremblay, U. S. Department of the Army, ARDEC
B. A. Wilson, McDonnell Douglas Corporation

Copyright ASME International
Provided by IHS under license with ASME
No reproduction or networking permitted without license from IHS
Not for Resale

CONTENTS

Foreword iii
Standards Committee Roster v

1 Scope 1

2 Line Conventions 1
2.1 Line Widths 1
2.2 Line Spacing 1
2.3 Visible Lines 1
2.4 Hidden Lines 1
2.5 Section Lining 1
2.6 Center Lines 2
2.7 Symmetry Line 2
2.8 Dimension, Extension, and Leader Lines 2
2.9 Cutting Plane and Viewing Plane Lines 3
2.10 Break Lines 3
2.11 Phantom Lines 3
2.12 Stitch Lines 3
2.13 Chain Lines 3

3 Arrowheads 3

4 Lettering 3
4.1 Lettering Type — Single Stroke Gothic Lettering 4
4.2 Letter Style 4
4.3 Letters — Upper and Lower Case 4
4.4 Letter Height 4
4.5 Letter Spacing 4
4.6 Legibility 4

Figures
1 Width and Types of Lines 5
2 Applications of Lines 6
3 Hidden Line Techniques and Symmetry Line Application 7
4 Section Lining of Adjacent Parts 7
5 Direction of Section Lines 8
6 Full Section 8
7 Outline Section Lining 8
8 Thin Material in Section 9
9 Arrowhead Placement on Dimension Lines 9
10 Special Applications of Extension Lines 10
11 Termination of Leaders 10
12 Phantom Line Applications 11

Copyright ASME International
Provided by IHS under license with ASME
No reproduction or networking permitted without license from IHS
Not for Resale

13 Arrowhead Styles 12
14 Inclined Letters 12
15 Vertical Letters 12
16 Microfont Letters 13

Table

1 Minimum Letter Heights 4

Appendix

1 Minimum Letter Heights (Inch) 14

Copyright ASME International
Provided by IHS under license with ASME
No reproduction or networking permitted without license from IHS
Not for Resale

LINE CONVENTIONS AND LETTERING

1 SCOPE

This Standard establishes the line and lettering practices for use in the preparation of engineering drawings, including the recognition of the requirements for CAD (Computer Aided Design) and manual preparation for their reduction and reproduction. All dimensions used in this Standard are in millimeters except in Appendix I.

2 LINE CONVENTIONS

Line conventions describe the size, construction, and application of the various lines used in making engineering drawings. The following identifies the type and style of lines for use on engineering drawings. These lines shall be sharp, opaque, and uniform.

2.1 Line Widths

Two widths of lines are recommended for use on drawings (see Fig. 1). The ratio of line widths should be approximately two-to-one. It is recommended the thin line width be 0.3 mm minimum, and the thick line width be 0.6 mm minimum. All lines of the same type shall be uniform throughout the drawing. One width of line is acceptable on drawings prepared by a CAD (Computer Aided Design) system.

2.2 Line Spacing

Spacing between parallel lines may be exaggerated to a maximum of 3 mm, so there is no fill-in when the drawing is reproduced.

2.3 Visible Lines

Visible lines consist of solid lines and shall be used for representing visible edges or contours of objects (see Figs. 1 and 2).

2.4 Hidden Lines

Hidden lines are lines used to represent hidden edges and contours. They consist of short evenly spaced dashes and are used to show the hidden features of an object (see Figs. 1 and 2). The lengths of the dashes may vary slightly in relation to the size of the drawing.

Hidden lines shall always begin and end with a dash in contact with the visible or hidden line from which they start or end, except when such a dash would form a continuation of a visible line, or when a CAD system has limitations that cannot comply with these requirements. Dashes shall join at corners, and arcs shall start with dashes at tangent points (see Fig. 3).

Hidden lines should be omitted when their use is not required for the clarity of the drawing. Although features located behind transparent materials may be visible, they shall be treated as concealed features and shown with hidden lines.

2.5 Section Lining

Section lining is a pattern of straight, equally spaced, parallel lines used to indicate the cut surfaces of an object in section views (see Figs. 1 and 2).

2.5.1 General Principles. Cut surfaces of sectional views may be identified by section lining. Section lining is optional and may be used when necessary to distinguish individual components of an assembly or to distinguish different surface levels of a full or partial section through a part (see ANSI Y14.3, Multi and Sectional View Drawings).

Sections should be drawn to show interior construction which cannot be clearly shown by hidden lines in exterior views. A section is drawn to show how the object would appear if an imaginary cutting plane were passed through the object perpendicular to the direction of sight and the portion of the object between

Copyright ASME International
Provided by IHS under license with ASME
No reproduction or networking permitted without license from IHS
Not for Resale

the observer and the cutting plane were removed broken away.

Lettering should not be placed in section areas. However when it is unavoidable, the section lining shall be omitted in the area for the lettering (see Fig. 4).

When several adjacent parts are shown in a section view, the parts may be sectioned as shown in Fig. 4.

2.5.2 Direction and Spacing. Section lining should be drawn at an angle of 45 deg. within the main outlines of the view [see Fig. 4, item (a)]. On adjacent parts, the section lines should be drawn in the opposite direction [see Fig. 4, item (b)]. For additional adjacent parts, any suitable angle may be used to make each part stand out separately and clearly [see Fig. 4 item (c)].

Do not purposely draw section lining to meet at common boundaries. When the shape or position of a section area is such that the section lining would be parallel or perpendicular, or nearly so, to a prominent visible line bounding the sectioned area, a special angle should be chosen (see Fig. 5).

Section lining shall be uniformly spaced a minimum of 1.5 mm, and spaced as generously as possible and yet preserve the unity and contrast of the sectioned areas (see Fig. 6).

Outline section lining is drawn adjacent to the boundaries only of the sectioned area, and is preferred for large areas when section lining is required, provided clarity is not sacrificed (see Fig. 7).

2.5.3 Thin Sections. When section lining is used, sections less than 4 mm thick, such as sheet metal items, packing, and gaskets, may be shown without section lining (see Fig. 8).

2.6 Center Lines

Center lines are used to represent axes or center planes of symmetrical parts and features, bolt circles, and paths of motion (see Figs. 2 and 3). The long line portion of the center line may vary in length depending on the size of the drawing.

Center lines shall start and end with long lines and shall intersect by crossing the long lines or short dashes, except when a CAD system has limitations that cannot comply with these requirements. Center lines should extend uniformly and distinctly a short distance beyond the object or feature of the drawing unless a longer extension is required for dimensioning or for some other purpose.

Center lines shall not terminate at other lines of the drawing nor shall they extend through the space between views. Short center lines may be unbroken if no confusion results with other lines.

2.7 Symmetry Line

Symmetry lines are used as an axis of symmetry for a partial view. The line of symmetry is identified by two short parallel lines drawn at right angles through a center line near each end (see Fig. 1).

Symmetry lines are used when representing partially drawn views and partial sections of symmetrical parts (see Fig. 3). Symmetrical view visible and hidden lines may extend past the center line if clarity would be improved.

2.8 Dimension, Extension, and Leader Lines

These are solid lines used to dimension drawings as described in the following paragraphs (see ANSI Y14.5M, Dimensioning and Tolerancing).

2.8.1 Dimension Lines. Dimension lines are used to indicate the extent and direction of dimensions, and are terminated with uniform arrowheads (see Figs. 1 and 2). Arrowheads shall be drawn within the limits of the dimension line if possible [see Fig. 9(a)]. Where inadequate space is available, the arrowheads may be shown outside the dimensional limit [see Fig. 9(b)].

2.8.2 Extension Lines. Extension lines are used to indicate the point or line on the drawing to which the dimension applies (see Figs. 1 and 2). They are also used to indicate the extension of a surface to a theoretical intersection (see Fig. 10).

2.8.3 Leader Lines. Leader lines are used to direct notes, dimensions, symbols, item numbers, or part numbers on the drawing (see Figs. 1 and 2). A leader line is a straight inclined line, not vertical or horizontal, except for a short horizontal portion extending to the center of the height of the first or last letter or digit of the note. The horizontal portion of the leader shall not underline the note, and may be omitted entirely.

A vertical line may be used at the end of the leader to group information. When the vertical line is used the leader line may terminate at any point on the vertical line.

Copyright ASME International
Provided by IHS under license with ASME
No reproduction or networking permitted without license from IHS
Not for Resale

Leader lines should not be bent in any way unless unavoidable.

2.8.3.1 Terminate leaders as follows:

(a) without an arrowhead or dot, if they end on a dimension line [see Fig. 11(a)];

(b) with a dot 1.5 mm minimum diameter, if they end within outlines of an object [see Fig. 11(b)];

(c) with an arrowhead, if they end on the outline of an object [see Fig. 11(c)].

2.8.3.2 Avoid the following when drawing leader lines:

(a) crossing of leaders;

(b) long leaders;

(c) leaders that are parallel to adjacent dimensions, extension or section lines;

(d) small angles between leaders and terminating surfaces.

2.9 Cutting Plane and Viewing Plane Lines

Cutting plane and viewing plane lines are used to indicate the location of cutting planes for sectional views and the viewing position for removed views (see Figs. 1 and 2). Cutting plane and viewing plane lines shall be drawn to stand out clearly on the drawing. The ends of the lines are at 90 deg., and terminated by arrowheads to indicate the direction of sight for viewing (see Fig. 2, and ANSI Y14.3). Three forms of cutting plane and viewing plane lines are as follows:

(a) evenly spaced dashes [see Fig. 1 (line 9)];

(b) alternating long dashes and pairs of short dashes. The long dashes may vary in length, depending on the size of the drawing [see Fig. 1 (line 10)].

(c) Figure 1 (line 11), same as lines 9 and 10 except the dashes between line ends are omitted.

2.10 Break Lines

Break lines are used when complete views are not required. The two forms of break lines are:

(a) freehand line [see Fig. 1 (line 12) and Fig. 2];

(b) long lines joined by zigzags [see Fig. 1 (line 13), and Fig. 12(a)].

2.11 Phantom Lines

Phantom lines are used to indicate:

(a) alternate positions of moving parts (see Fig. 2);

(b) adjacent positions of related parts [see Fig. 12(a)];

(c) repeated detail [see Fig. 12(b) and (c)]; and

(d) filleted and rounded corners [see Fig. 12(d)].

Phantom lines consist of long lines separated by pairs of short dashes. Phantom lines shall start and end with long lines which may vary in length depending on the size of the drawing [see Fig. 1 (line 14)].

2.12 Stitch Lines

Stitch lines are used for indicating a sewing or stitching process [see Fig. 1 (lines 15 and 16)]. The two forms of stitch lines are as follows:

(a) short dashes and spaces of equal lengths;

(b) dots approximately 0.3 mm diameter, and 3 mm apart.

2.13 Chain Lines

Chain lines are used to indicate a surface or surface zone receiving additional treatment or consideration within limits specified on the drawing (see Fig. 2). They may also be used to indicate the location of a projected tolerance zone as defined in ANSI Y14.5M. Chain lines consist of alternating lines and short dashes [see Fig. 1 (line 17)].

3 ARROWHEADS

Arrowheads are used to terminate dimension, leader, and cutting and viewing plane lines. See paras. 2.8.1, 2.8.3, and 2.9. Arrowhead length and width should be a ratio of approximately 3:1. The width of the arrowhead should be proportionate to the thickness of the lines used. A single style of arrowhead shall be used throughout the drawing (see Fig. 13).

4 LETTERING

For clarity within this Standard, lettering means both letters and numerals. The following identifies the type and style of lettering for use on engineering drawings.

Copyright ASME International
Provided by IHS under license with ASME
No reproduction or networking permitted without license from IHS

Not for Resale

4.1 Lettering Type — Single Stroke Gothic Lettering

Lettering on drawings shall be legible and suitable for easy and rapid execution. These requirements are met in the recommended single stroke gothic characters shown in Figs. 14 and 15 or adaptations thereof, which improve reproduction legibility. One such adaptation by the National Micrographics Association is the gothic style Microfont alphabet intended for general usage (see Fig. 16).

Opaque and well spaced lettering is required on the drawing for microfilm reproduction. When additions or revisions are made to a drawing, the original style of lettering shall be maintained.

TABLE 1 MINIMUM LETTER HEIGHTS

Use For	Letter Heights	Drawing Size
Drawing title, drawing size, CAGE Code, drawing number, and revision letter[1]	6 mm	A0, A1
	3 mm	A2, A3, A4
Section and view letters	6 mm	All
Zone letters and numerals in borders		
Drawing block headings	2.5 mm	All
All other characters	3 mm	All

NOTE:
(1) When used within the title block.

4.2 Letter Style

Either inclined or vertical lettering is permissible. Only one style of lettering shall be used throughout a drawing. The preferred slope for the inclined characters is 5 in 2 or approximately 68 deg. with the horizontal (see Fig. 14).

4.3 Letters — Upper and Lower Case

Upper case letters shall be used for all lettering on drawings unless lower case letters are required (see Figs. 14 and 15).

4.4 Letter Height

The minimum letter heights for various size drawings are given in Table 1 and Appendix I.

4.5 Letter Spacing

Letters in words should be spaced so the background areas between the letters are approximately equal, and words are clearly separated. The space between two numerals having a decimal point between them is to be a minimum of two-thirds the height of the lettering. The vertical space between lines of lettering shall be no more than the height of the lettering, or no less than half the height of the lettering.

4.6 Legibility

The lettering heights, spacing, and proportions in Figs. 14, 15, and 16, and also Table 1 normally provide acceptable reproduction. When applying lettering manually, or by typewriter, or CAD equipment which utilize heights, spacing, or proportions other than those recommended, the lettering is acceptable when the minimum legibility and reproduction requirements of the accepted industry or military reproduction specifications are met. Therefore, the basic requirement for lettering on a drawing is to produce fully legible copies.

Copyright ASME International
Provided by IHS under license with ASME
No reproduction or networking permitted without license from IHS
Not for Resale

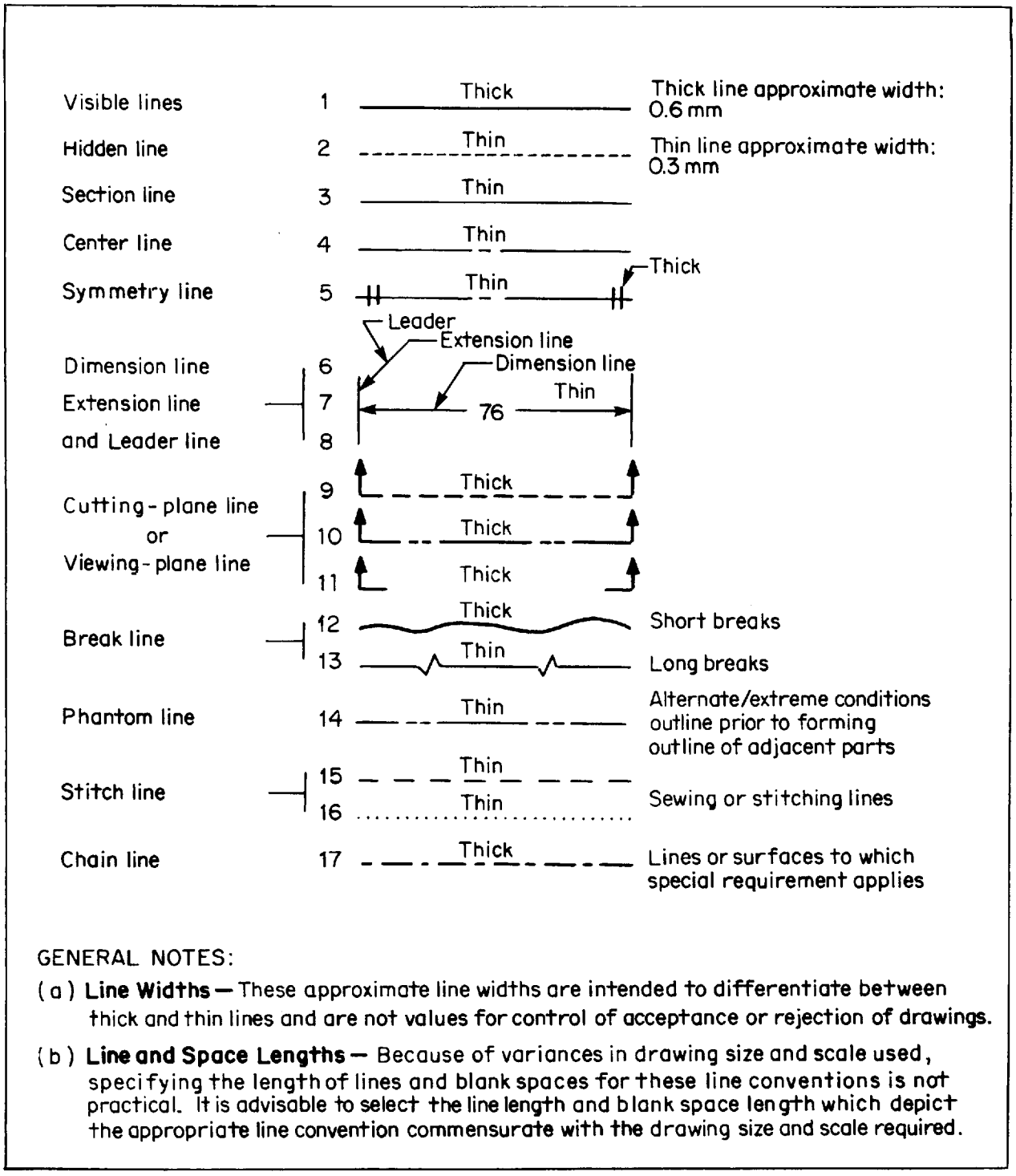

GENERAL NOTES:

(a) **Line Widths** — These approximate line widths are intended to differentiate between thick and thin lines and are not values for control of acceptance or rejection of drawings.

(b) **Line and Space Lengths** — Because of variances in drawing size and scale used, specifying the length of lines and blank spaces for these line conventions is not practical. It is advisable to select the line length and blank space length which depict the appropriate line convention commensurate with the drawing size and scale required.

FIG. 1 WIDTH AND TYPES OF LINES

Copyright ASME International
Provided by IHS under license with ASME
No reproduction or networking permitted without license from IHS
Not for Resale

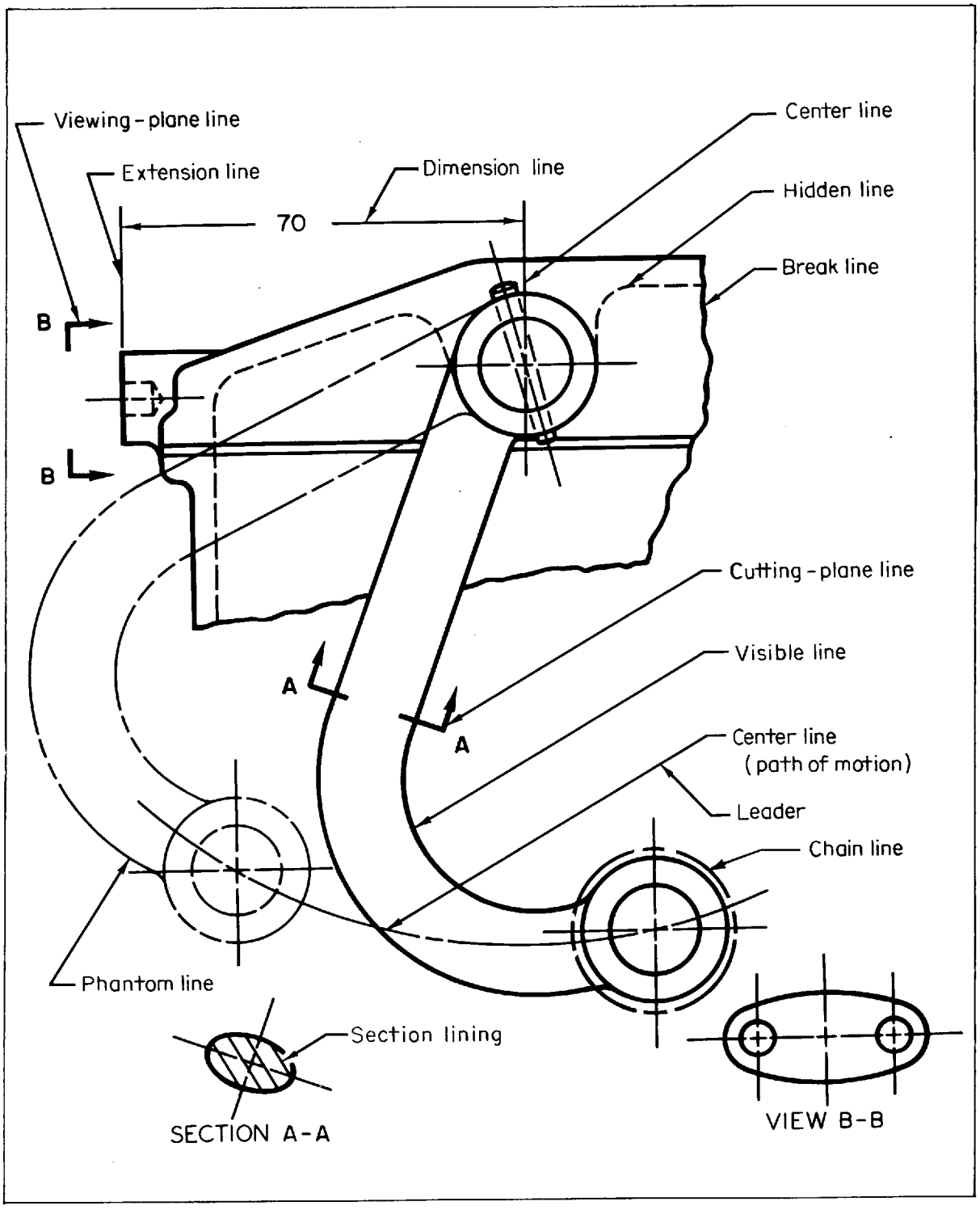

FIG. 2 APPLICATIONS OF LINES

Copyright ASME International
Provided by IHS under license with ASME
No reproduction or networking permitted without license from IHS
Not for Resale

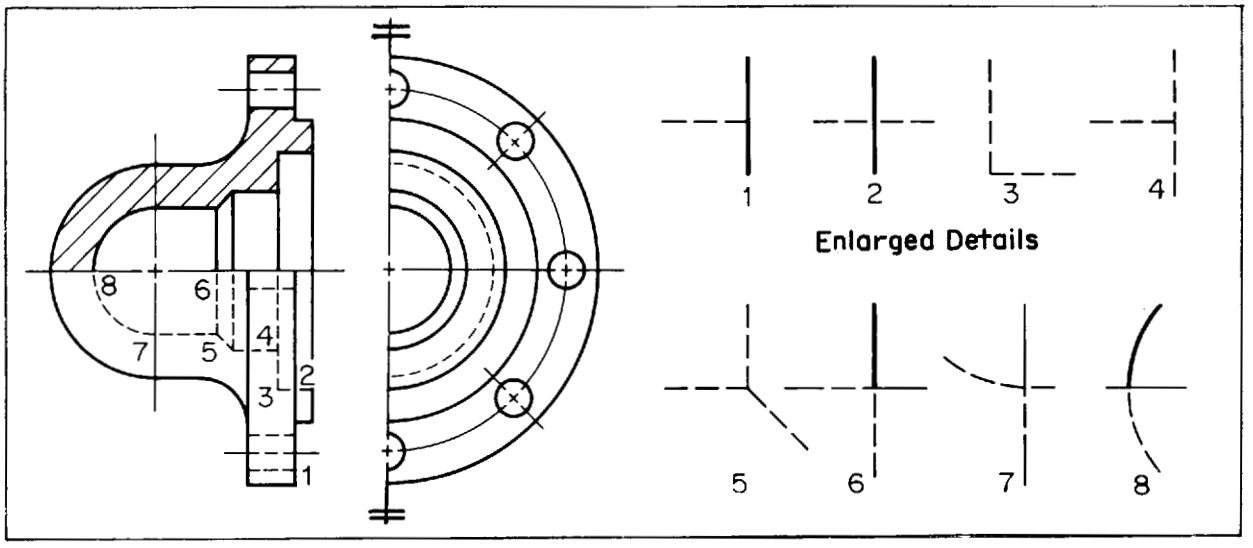

FIG. 3 HIDDEN LINE TECHNIQUES AND SYMMETRY LINE APPLICATION

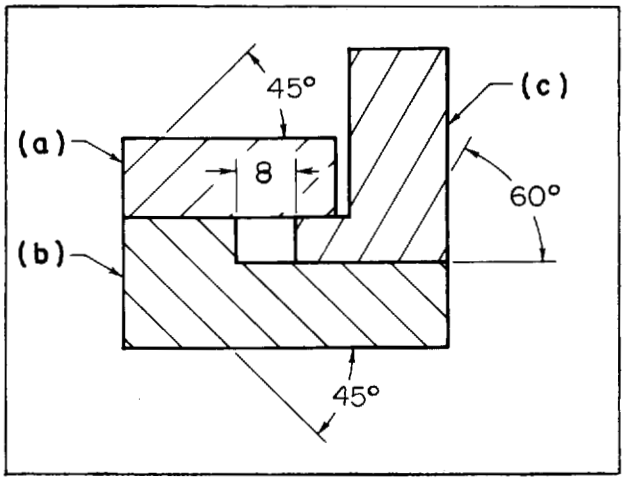

FIG. 4 SECTION LINING OF ADJACENT PARTS

Copyright ASME International
Provided by IHS under license with ASME
No reproduction or networking permitted without license from IHS
Not for Resale

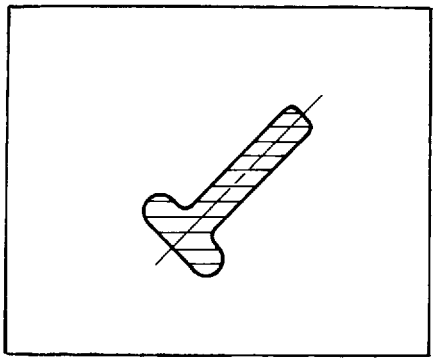

FIG. 5 DIRECTION OF SECTION LINES

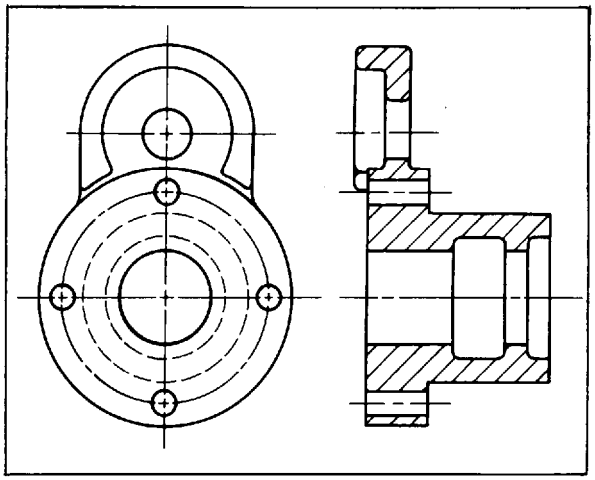

FIG. 6 FULL SECTION

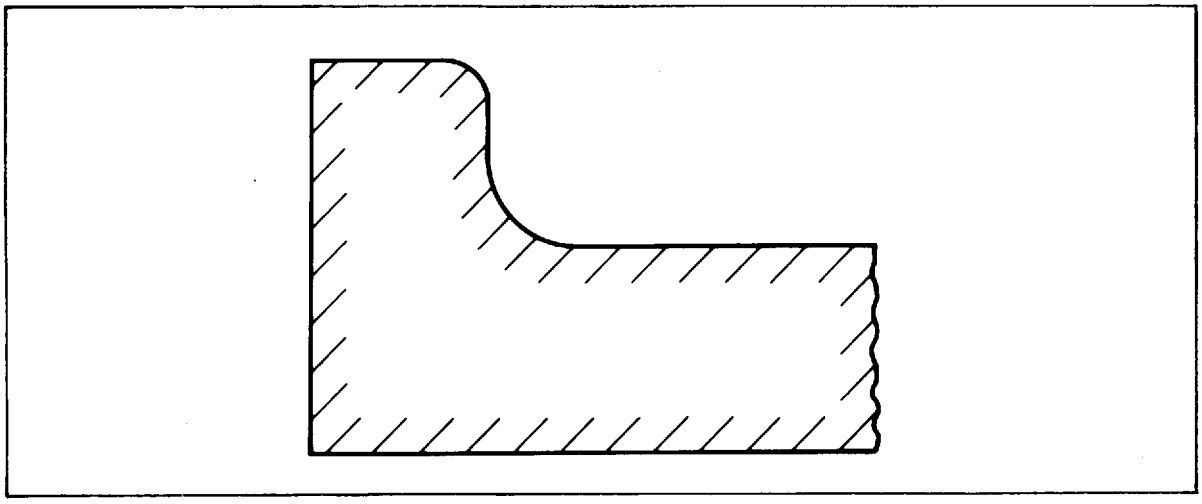

FIG. 7 OUTLINE SECTION LINING

Copyright ASME International
Provided by IHS under license with ASME
No reproduction or networking permitted without license from IHS
Not for Resale

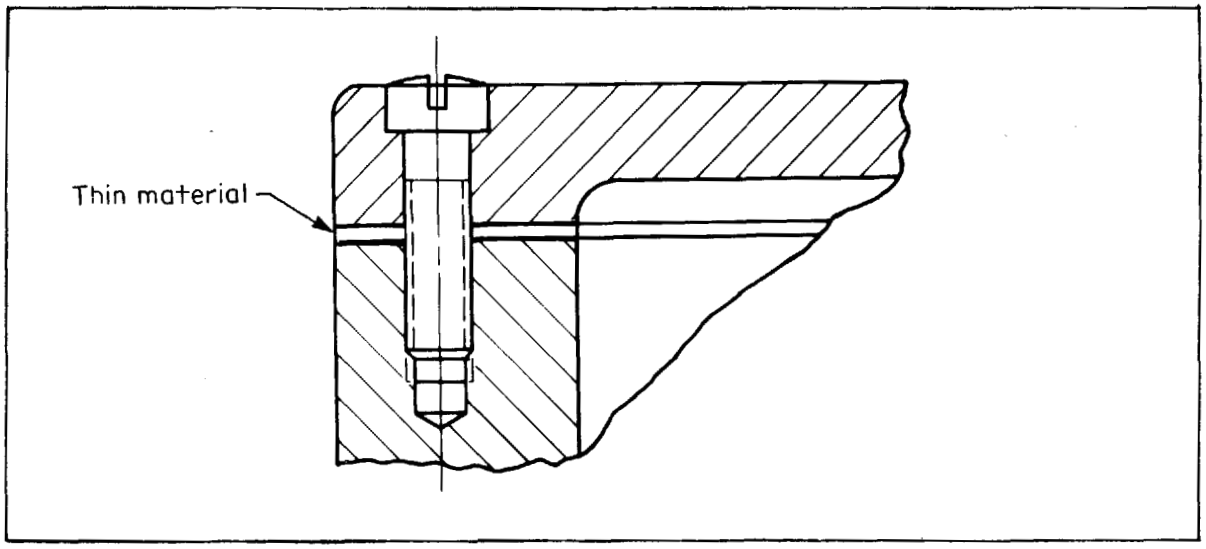

FIG. 8 THIN MATERIAL IN SECTION

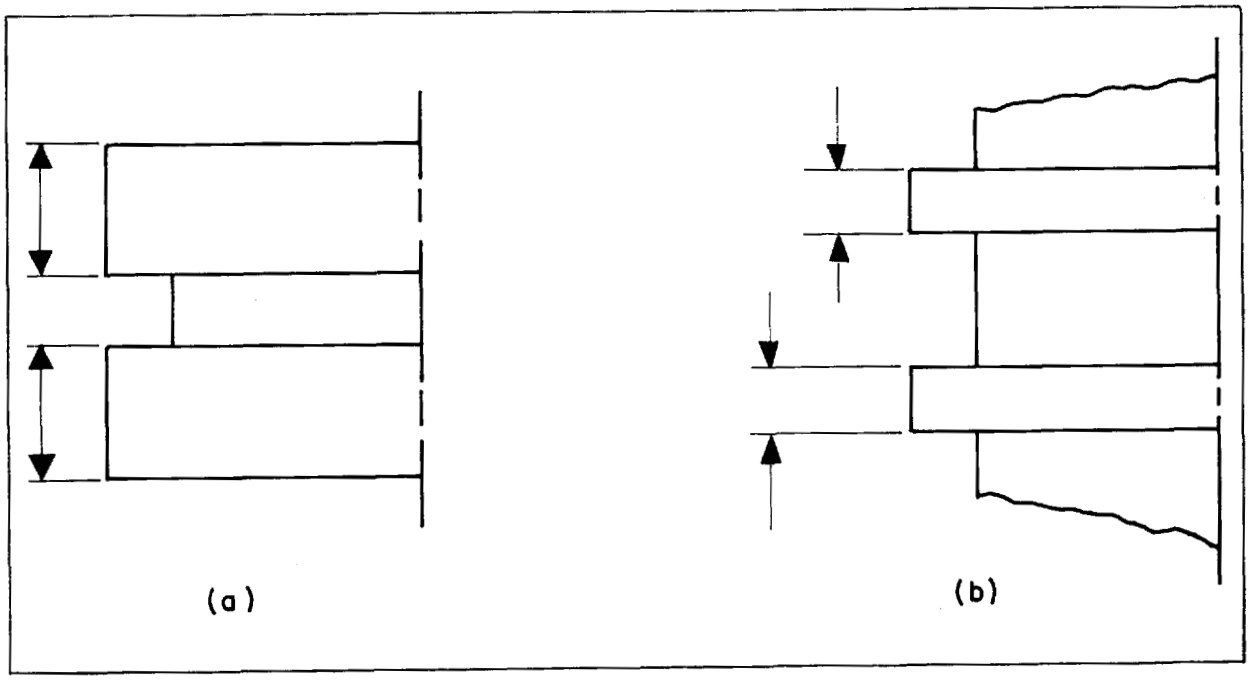

FIG. 9 ARROWHEAD PLACEMENT ON DIMENSION LINES

Copyright ASME International
Provided by IHS under license with ASME
No reproduction or networking permitted without license from IHS Not for Resale

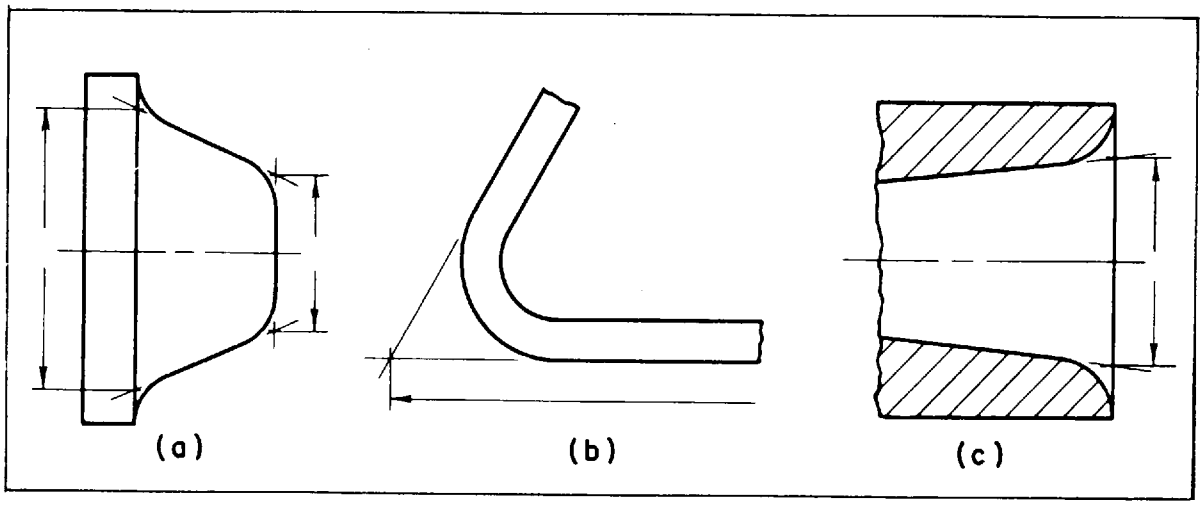

FIG. 10 SPECIAL APPLICATIONS OF EXTENSION LINES

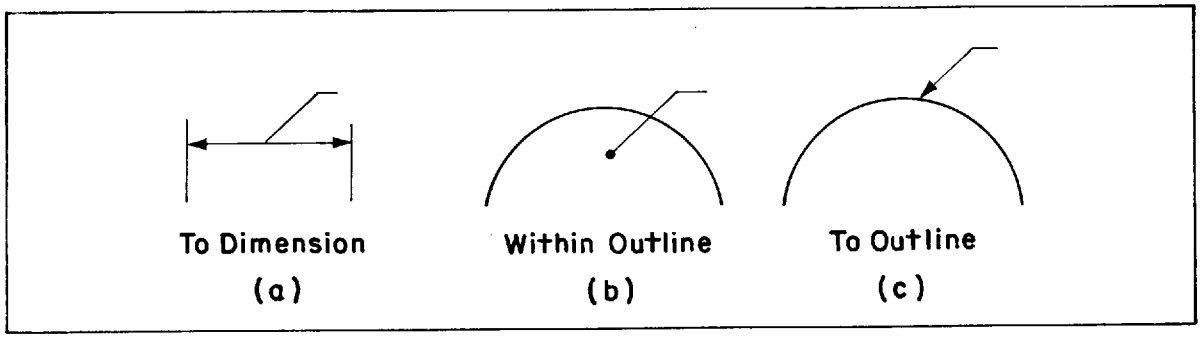

FIG. 11 TERMINATION OF LEADERS

Copyright ASME International
Provided by IHS under license with ASME
No reproduction or networking permitted without license from IHS
Not for Resale

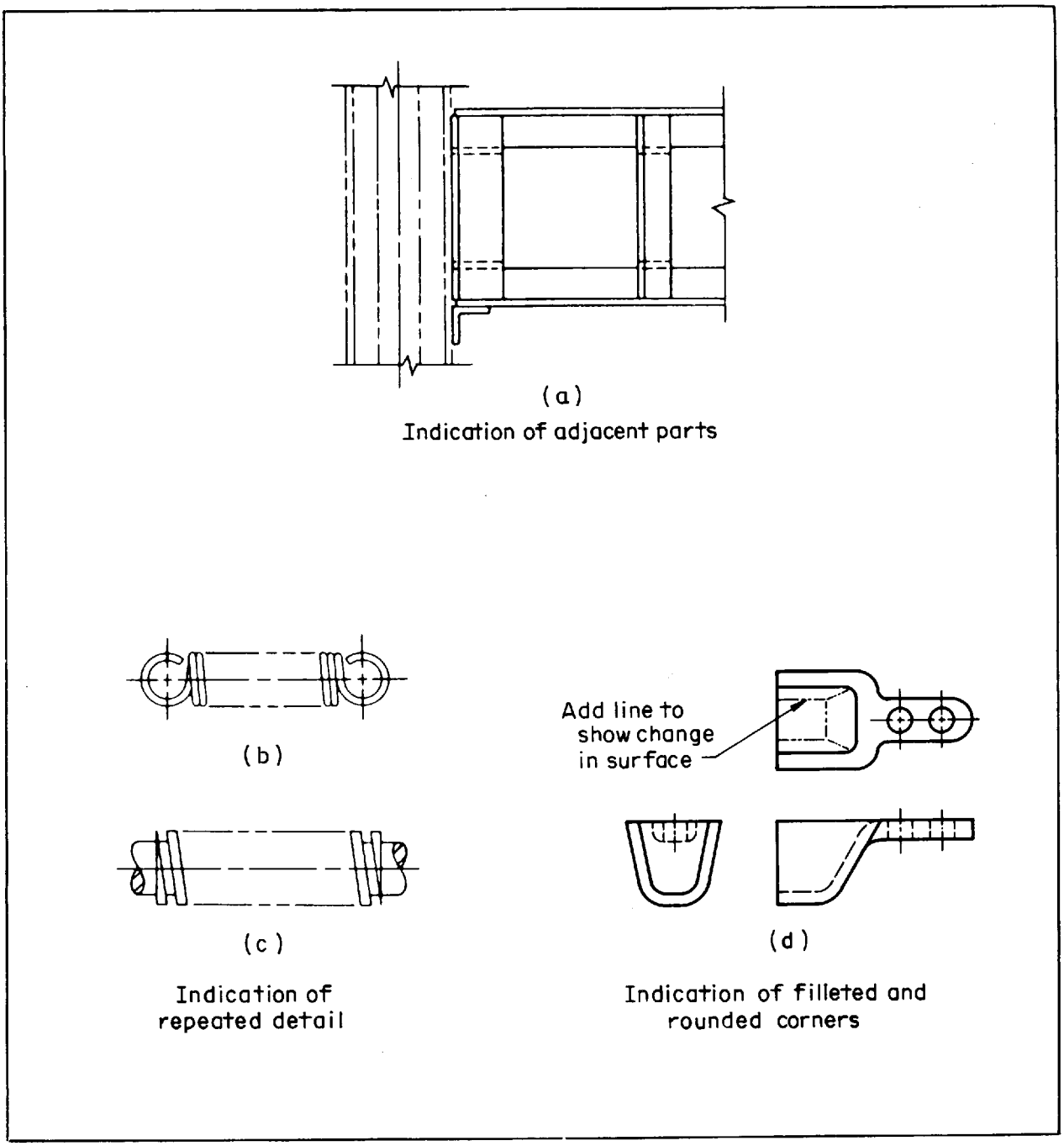

FIG. 12 PHANTOM LINE APPLICATIONS

Copyright ASME International
Provided by IHS under license with ASME
No reproduction or networking permitted without license from IHS
Not for Resale

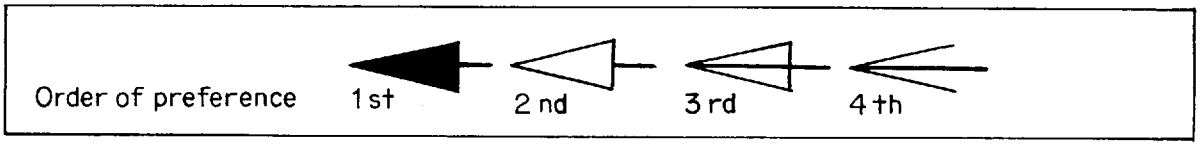

FIG. 13 ARROWHEAD STYLES



FIG. 14 INCLINED LETTERS

Copyright ASME International
Provided by IHS under license with ASME
No reproduction or networking permitted without license from IHS
Not for Resale

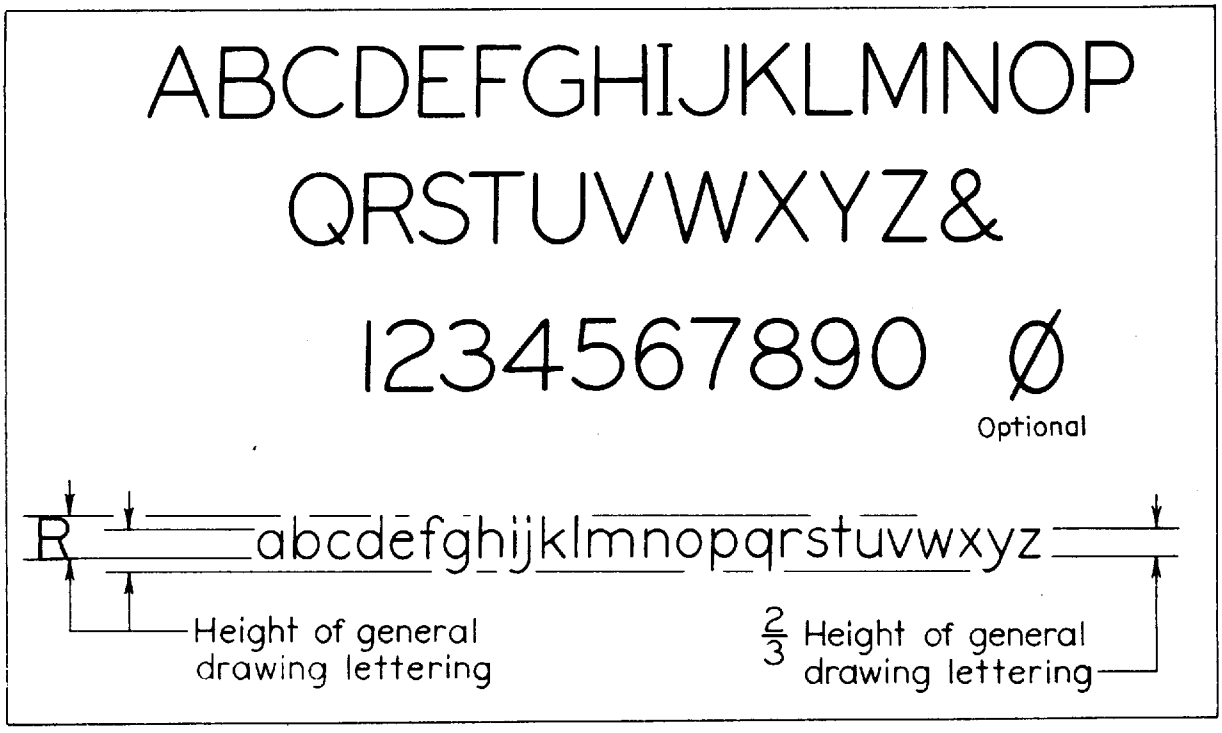

FIG. 15 VERTICAL LETTERS

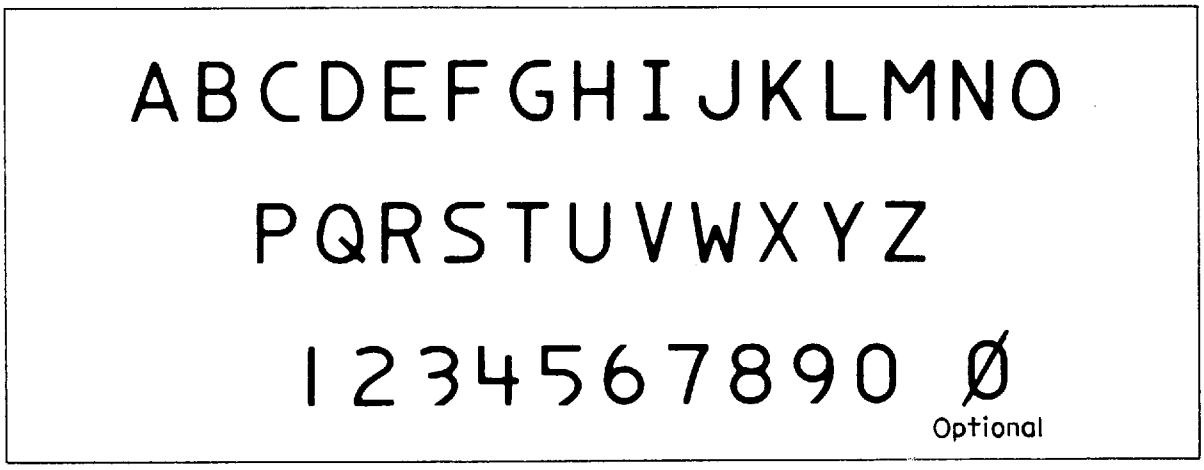

FIG. 16 MICROFONT LETTERS

Copyright ASME International
Provided by IHS under license with ASME
No reproduction or networking permitted without license from IHS
Not for Resale

APPENDIX I
MINIMUM LETTER HEIGHTS (INCH)

(This Appendix is an integral part of ASME Y14.2M-1992.)

Use For	Letter Heights In Inches	Drawing Size
Drawing title, drawing size, CAGE Code, drawing number, and revision letter[1]	.24 12	D, E, F, H, J, K A, B, C, G
Section and view letters	.24	All
Zone letters and numerals in borders		
Drawing block headings	.10	All
All other characters	.12	All

NOTE:
(1) When used within the title block.

Copyright ASME International
Provided by IHS under license with ASME
No reproduction or networking permitted without license from IHS
Not for Resale

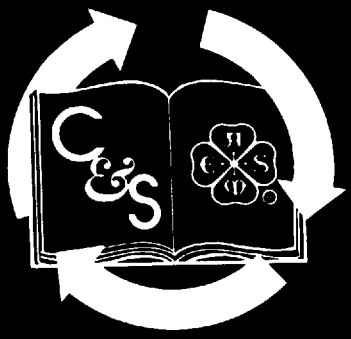

This document is printed
on 50% recycled paper.

Copyright ASME International
Provided by IHS under license with ASME
No reproduction or networking permitted without license from IHS

Not for Resale