ASME TDP-1-1998
(Revision of ANSI/ASME TDP-1-1985)

RECOMMENDED PRACTICES FOR THE PREVENTION OF WATER DAMAGE TO STEAM TURBINES USED FOR ELECTRIC POWER GENERATION

AN AMERICAN NATIONAL STANDARD



The American Society of
Mechanical Engineers

Copyright ASME International
Provided by IHS under license with ASME
No reproduction or networking permitted without license from IHS

Not for Resale



The American Society of Mechanical Engineers

AN AMERICAN NATIONAL STANDARD

RECOMMENDED PRACTICES FOR THE PREVENTION OF WATER DAMAGE TO STEAM TURBINES USED FOR ELECTRIC POWER GENERATION

ASME TDP-1-1998

(Revision of ANSI/ASME TDP-1-1985)

FOSSIL FUELED PLANTS

Copyright ASME International
Provided by IHS under license with ASME
No reproduction or networking permitted without license from IHS
Not for Resale

Date of Issuance: January 29, 1999

This Standard will be revised when the Society approves the issuance of a new edition. There will be no addenda or written interpretations of the requirements of this Standard issued to this edition.

ASME is the registered trademark of The American Society of Mechanical Engineers.

This code or standard was developed under procedures accredited as meeting the criteria for American National Standards. The Standards Committee that approved the code or standard was balanced to assure that individuals from competent and concerned interests have had an opportunity to participate. The proposed code or standard was made available for public review and comment that provides an opportunity for additional public input from industry, academia, regulatory agencies, and the public-at-large.

ASME does not "approve," "rate," or "endorse" any item, construction, proprietary device, or activity.

ASME does not take any position with respect to the validity of any patent rights asserted in connection with any items mentioned in this document, and does not undertake to insure anyone utilizing a standard against liability for infringement of any applicable Letters Patent, nor assumes any such liability. Users of a code or standard are expressly advised that determination of the validity of any such patent rights, and the risk of infringement of such rights, is entirely their own responsibility.

Participation by federal agency representative(s) or person(s) affiliated with industry is not to be interpreted as government or industry endorsement of this code or standard.

ASME accepts responsibility for only those interpretations issued in accordance with governing ASME procedures and policies which precludes the issuance of interpretations by individual volunteers.

No part of this document may be reproduced in any form,
in an electronic retrieval system or otherwise,
without the prior written permission of the publisher.

The American Society of Mechanical Engineers
Three Park Avenue, New York, NY 10016-5990

Copyright © 1999 by
THE AMERICAN SOCIETY OF MECHANICAL ENGINEERS
All Rights Reserved
Printed in U.S.A.

Copyright ASME International
Provided by IHS under license with ASME
No reproduction or networking permitted without license from IHS

Not for Resale

FOREWORD

(This Foreword is not a part of ASME TDP-1–1998)

A substantial increase in the number of reported occurrences of steam turbine damage by water induction precipitated design recommendations from the two major domestic turbine manufacturers as an attempt to reduce such incidents. Concurrently, utilities and designers began formulating their own design criteria because of the economic need to keep the generating units in service. Realizing the common need for a uniform set of design criteria to alleviate this problem, an ASME Standards Committee was formed, consisting of representatives of utilities, equipment manufacturers, and design consultants, to develop recommended practices for use in the electric generating industry.

This Standard, resulting from the work and deliberation of the Turbine Water Damage Prevention Committee, was approved as a standard of The American Society of Mechanical Engineers by the ASME Standardization Committee and the ASME Policy Board, Codes and Standards on July 26, 1972.

In 1979, the Committee proposed a revision to this ASME Standard to include information on condenser steam and water dumps, direct contact feedwater heaters, and steam generators. This proposed revision was approved by the ASME Standardization Committee on April 25, 1980.

The last revision was approved as an American National Standard on September 13, 1985. In 1994 the ASME Board on Standardization approved the disbandment of the Committee on Turbine Water Damage Prevention, and the withdrawal of the standard TDP-1. This was due to a perceived lack of interest/use by the industry.

Subsequent interest from users and potential users for TDP-1 convinced ASME to reconstitute the Committee under the Board on Pressure Technology Codes and Standards in June of 1997.

The current document was approved as an American National Standard on June 17, 1998.

Copyright ASME International
Provided by IHS under license with ASME
No reproduction or networking permitted without license from IHS
Not for Resale

ASME STANDARDS COMMITTEE TWDP
Turbine Water Damage Prevention

(The following is the roster of the Committee at the time of approval of this Standard.)

OFFICERS

R. G. Narula, *Chair*
L. A. Kielasa, *Vice Chair*
A. J. Roby, *Secretary*

COMMITTEE PERSONNEL

J. C. Boyle, Stone & Webster Engineering Corp.
R. D. Brown, ABB Combustion Engineering
V. Buquoi, Westinghouse Electric Co.
R. Cummins, Foster Wheeler Power Systems
A. M. Donaldson, Parsons Power
C. J. Haynes, New England Power Co.
T. McCloskey, Electric Power Research Inst.
B. McMullen, Hartford Steam Boiler Insp./Ins.
B. K. Mitra, The Kuljian Corp.
C. Moore, Ontario Hydro
D. W. Schottler, Block & Veatch
J. Steverman, New England Power Service Co.
M. Wiernicki, ABB Power Generation, Inc.

Copyright ASME International
Provided by IHS under license with ASME
No reproduction or networking permitted without license from IHS
Not for Resale

CONTENTS

Foreword iii
Committee Roster v

1 Scope 1

2 Criteria 1
2.1 Recommendations 1
2.2 Failure 1

3 Design Recommendations 1
3.1 Steam Generators 1
3.2 Superheat Attemperator 2
3.3 Main Steam Piping 3
3.4 Cold Reheat Piping 6
3.5 Reheat Attemperator 6
3.6 Hot Reheat Piping 9
3.7 Feedwater Heaters and Extraction Systems 9
3.8 Direct Contact (DC) Feedwater Heaters 12
3.9 Turbine Steam Seal Systems 13
3.10 Boiler Feed Pump Turbine Steam Supply 17
3.11 Drain Systems — Turbine and Cycle Piping 20
3.12 Condenser Steam and Water Dumps 22

4 Operating Recommendations 24
4.1 Main Steam System 24
4.2 Cold Reheat Piping 24
4.3 Reheat Attemperator 25
4.4 Hot Reheat Piping 25
4.5 Feedwater Heaters and Extraction System 25
4.6 Turbine Steam Seal System 25
4.7 Boiler Feed Pump Turbine Steam Supply 26
4.8 Main Turbine 26

5 Testing, Inspecting, and Maintenance 26
5.1 Test — Once per Month 26
5.2 Inspections — Every 3 Months 27
5.3 Inspection and Maintenance During Planned Unit Outages 27

6 Closure 27

7 Nomenclature 27

Copyright ASME International
Provided by IHS under license with ASME
No reproduction or networking permitted without license from IHS
Not for Resale

Figures

1 Typical Flash Tank / Separators Arrangement 3
2 Typical Flash Tank / Separators Arrangement 4
3 Typical Superheater Spray System 5
4 Typical Cold Reheat Drain System 7
5 Typical Reheater Spray System 8
6 Typical Heater Drain System 10
7 Typical Heater Steam Side Isolation System 10
8 Typical Tube Side Isolation System 11
9 Typical Schematic Only 14
10 Typical Schematic Only 15
11 Main Turbine — Typical Steam Seal Arrangement 16
12 Typical Arrangement for a Boiler Feed Pump Turbine Steam Supply With Dual Admission 18
13 Typical Arrangement for a Boiler Feed Pump Turbine Steam Supply With Single Admission 19
14 Typical Continuous Drain Orifice 20
15 Typical Condenser Drain Manifolds 21
16 Arrangement for Feed Pump Turbine Exhaust 23

Copyright ASME International
Provided by IHS under license with ASME
No reproduction or networking permitted without license from IHS
Not for Resale

RECOMMENDED PRACTICES FOR THE PREVENTION OF WATER DAMAGE TO STEAM TURBINES USED FOR ELECTRIC POWER GENERATION

1 SCOPE

These recommended practices are concerned primarily with the prevention of water damage to steam turbines used for fossil fuel fired electric power generation. The practices cover design, operation, inspection, testing, and maintenance of those aspects of the following power plant systems and equipment concerned with the prevention of the induction of water into steam turbines and associated systems and equipment:

(a) main steam system, piping, and drains;
(b) reheat steam systems, piping, and drains;
(c) reheat attemperating system;
(d) turbine extraction systems, piping, and drains;
(e) feedwater heaters, piping, and drains;
(f) turbine drain system;
(g) turbine steam seal system, piping, and drains;
(h) main steam attemperator sprays;
(i) start-up systems;
(j) condenser steam and water dumps.

Any connection to the turbine is a potential source of water either by induction from external equipment or by accumulation of condensed steam. The sources treated specifically are those that have been found to be most frequently involved.

2 CRITERIA

2.1 Recommendations

Design, control, and operation of all systems that have a potential for allowing water to enter the turbine should prevent any unusual accumulations. However, since malfunctions do occur, the recommendations for preventing turbine damage due to water induction include one or more of the following where appropriate:

(a) detection of the presence of water either in the turbine or, preferably, external to the turbine before the water has caused damage;

(b) isolation of the water by manual or, preferably, automatic means after it has been detected;

(c) disposal of the water by either manual or, preferably, automatic means after it has been detected.

2.2 Failure

Where experience has shown a source of water is particularly hazardous, no single failure of equipment should result in water entering the turbine. The failure mode of the various devices used to prevent water induction should be considered so that a single failure of the signals (loss of air or electrical signal) will not cause water to enter the turbine.

3 DESIGN RECOMMENDATIONS

This Section outlines specific recommendations for the design of the systems listed. These recommendations are intended to represent a conservative design for protection from water induction. There is no intention to supersede any existing codes or governmental regulations.

3.1 Steam Generators

3.1.1 It is the responsibility of the plant designers to review and understand the design features of the steam generator and of the user to adhere to the operating procedures of the steam generator manufacturer as a precaution against water induction. The majority of the incidents of turbine water damage caused by water entering the turbine from the steam system have occurred during start-up or shutdown of a unit. The steam generator manufacturer's design and operating recommendations should include the required protection to prevent the induction of water into the main steam piping. Such areas as superheater attemperators, boiler start-up systems, high drum levels, and undrained superheaters are some potential sources of water.

3.1.2 Experience has shown that once-through flow units, because of their start-up system, offer a greater potential for water induction through the main steam system during start-up and shutdown operating modes

Copyright ASME International
Provided by IHS under license with ASME
No reproduction or networking permitted without license from IHS
Not for Resale

than do drum type steam generators. It is recommended that the start-up system on once-through units be designed so that no single failure of equipment can result in water entering the main steam line. Therefore, two of the following independent means of automatically preventing water from entering the main steam lines from the start-up system should be provided:

(a) the automatic opening of the drain system to the condenser from the start-up system flash tank or separator on detection of high level;

(b) automatic closing of the shutoff valve in the line from the start-up system to the main steam system on detection of high-hi level in the flash tank or separator;

(c) automatic shutoff of all sources of water entering the start-up system by either tripping all feed pumps or closing a shutoff valve on detection of high-hi level in the flash tank or separator.

Typical systems are shown in Figs. 1 and 2.

3.1.2.1 Figure 1 shows a primary drain line from the flash tank or separator with its associated level sensor and an independent automatically operated shutoff valve between the flash tank and the main steam system. The shutoff valve will be actuated by a high-hi level from an independent level signal. The drain line valve and the shutoff valve should have indicators in the control room for the open and closed positions.

3.1.2.2 Figure 2 shows a primary drain line from the flash tank or separator with its associated level sensor and an independent trip signal to the feedwater supply source. The trip signal will be actuated by a high-hi level from an independent level signal. The drain line valve and feedwater shutoff valve (if used) should have indicators in the control room for the open and closed positions.

3.1.3 It is recommended that start-up systems on other than once-through units (such as drum type) be designed so that no single failure of equipment can result in water entering the main steam line. The method of accomplishing this should be as determined by the designer.

3.2 Superheat Attemperator

3.2.1 Spray water injected in the steam generator ahead of the final superheat section is a means to control steam temperature at the outlet of the superheater. These sprays are generally not effective in controlling final superheat steam temperature at low loads or during turbine rolling. The opportunity exists for water to accumulate in the pendant elements of the superheater during low load operation from either condensation or overspraying. Units which have to operate for extended periods of time with the spray header system charged to full pump discharge pressure (e.g., during start-up and shut-down conditions) are subject to possible leakage of the spray valves. Such leakage can result in water accumulating in the pendant superheater sections and may even flow over into the main steam system. When steam flow is increased, this accumulation of water can be injected into the turbine.

3.2.2 A power-operated block valve should be installed in series with the attemperator spray control valve. This valve provides tight shutoff to prevent water leakage past the spray control valve and provides a backup in the event that the spray control valve fails to close when required (see Fig. 3). The spray control and block valves constitute a double line of defense against the inadvertent introduction of spray water into the main steam system.

3.2.3 The control system should automatically close and override all manual and automatic setting of the superheat spray control and block valves when the master fuel trip actuates or the turbine trips.

3.2.4 The block valve should be automatically closed when the unit is operated below a predetermined load and, simultaneously, the control valve is closed. Superheat spray should not be released for automatic control at loads where it can be determined that it is relatively ineffective in reducing final superheater temperature. The loads used should be in accordance with the boiler manufacturer's recommendations. Manual control of spray below the predetermined load should only be used with close operator supervision. Manual control must not prevent the automatic protection features specified in para. 3.2.3 from operating in the event the master fuel trip actuates or the turbine trips.

3.2.5 The control system for opening the spray control valve should be designed to prevent the sudden injection of large quantities of water.

3.2.6 A bypass valve around the spray control valves should be power-operated and actuated to close when the block valve is closed. If a manual bypass is used, a second power-operated block valve should be provided to give a second line of defense.

Copyright ASME International
Provided by IHS under license with ASME
No reproduction or networking permitted without license from IHS

Not for Resale

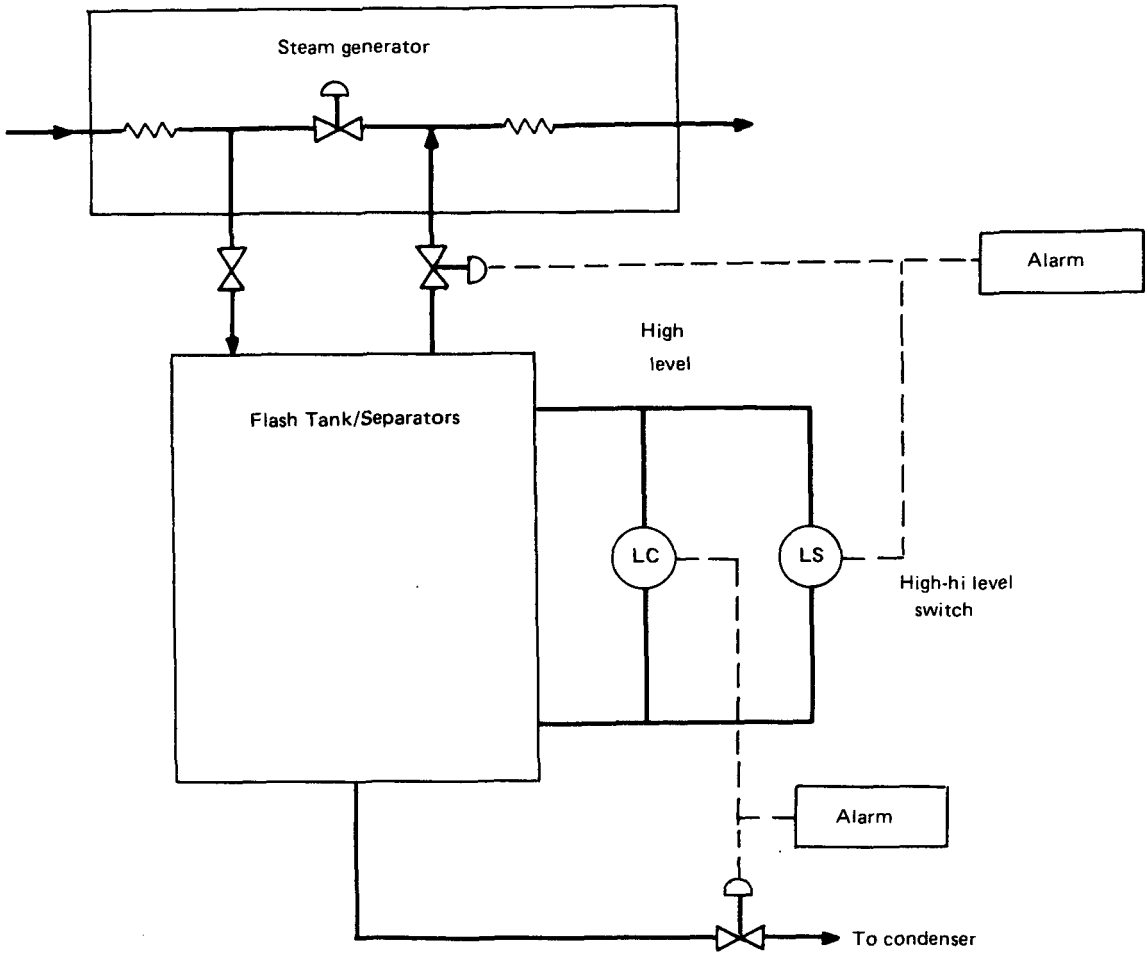

FIG. 1 TYPICAL FLASH TANK/SEPARATORS ARRANGEMENT

3.2.7 A bypass of a block valve should not be provided under any circumstances.

3.3 Main Steam Piping

The procedure recommended in this Section is to prevent the accumulation of water in the main steam piping.

3.3.1 Because of the lack of detection instrumentation that will close the turbine stop valves in time to prevent damage when the turbine is in operation, there are no recommendations included pertaining to the prevention of damage by water passing through the main steam piping and into the turbine. If such devices are developed and marketed, consideration should be given to include this instrumentation. Turbine valves should not be considered as devices which will prevent water induction into the turbine from the main steam line.

3.3.2 A drain should be installed at each low point in the main steam piping from the boiler outlet to the connection on the turbine stop valve. When reviewing the location of low points, consideration should be given to the position of the piping in both the cold and hot position. Where there is no specific low point (where there are long runs of horizontal piping), install a low point drain at the turbine end of this Section.

If the main steam line is split into more than one branch going into the turbine, each of these branches as well as the main header should be reviewed for low points. In addition, a connection should be located

Copyright ASME International
Provided by IHS under license with ASME
No reproduction or networking permitted without license from IHS Not for Resale

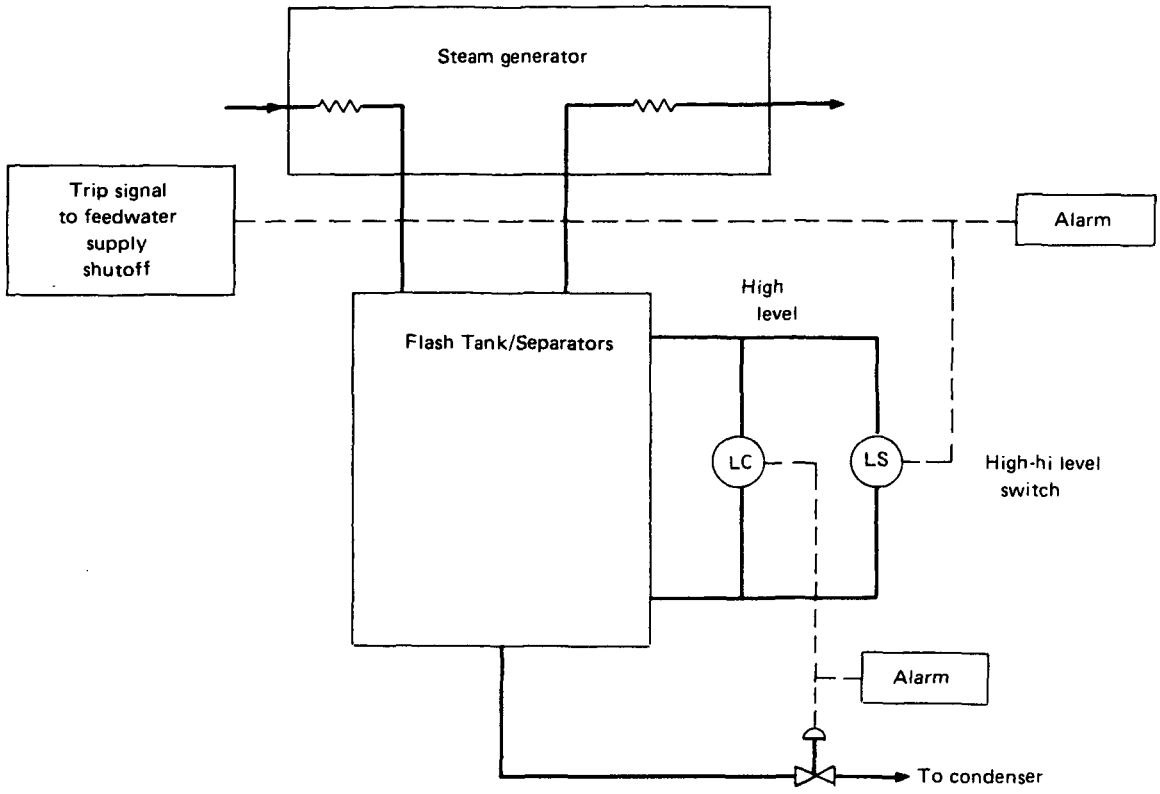

FIG. 2 TYPICAL FLASH TANK/SEPARATORS ARRANGEMENT

on each main steam branch at the turbine inlet just before the turbine stop valve. This connection can be used with the drains in the system as a bleedoff point for warning the main steam line during start-up. These are necessary because the main steam pipe normally has an extremely heavy wall and a substantial steam flow is required through the piping to permit complete heating of this piping to the superheat region before steam is admitted to the turbine. Main steam piping drains should not be manifolded together with any other drains from the boiler.

3.3.3 All of the drain lines and drain valve ports, including the connections on the main steam pipes just upstream of the turbine stop valves, should have an inside diameter of no less than 1 in. to minimize risk of plugging by foreign material. Care should be taken not to use nominal pipe sizes without clearly determining that the ID will meet this minimum dimension. Without sufficient line size in each of these areas, adequate drainage will not be obtained, particularly during the early stages of start-up when water is produced in these lines.

3.3.4 A power-operated valve should be located in each of the drains noted in this Section. Many users will require two valves in series in each of these drain lines. At least one of these two valves should be power-operated by controls located in the main control room. In addition, position indication should be provided in the main control room to permit the operator to determine the position of each of the power-operated drain valves. Where the second of these two drain valves is a manual valve, it should normally be kept open by locking or other acceptable means or procedures.

3.3.5 Before-seat drains or an equivalent connection should be provided on the turbine stop valve to permit clearing of any moisture and to permit a steam flow in the valve prior to start-up. This drain should be installed in the valve to permit complete draining of any water if this area is not self-draining. It should

Copyright ASME International
Provided by IHS under license with ASME
No reproduction or networking permitted without license from IHS
Not for Resale

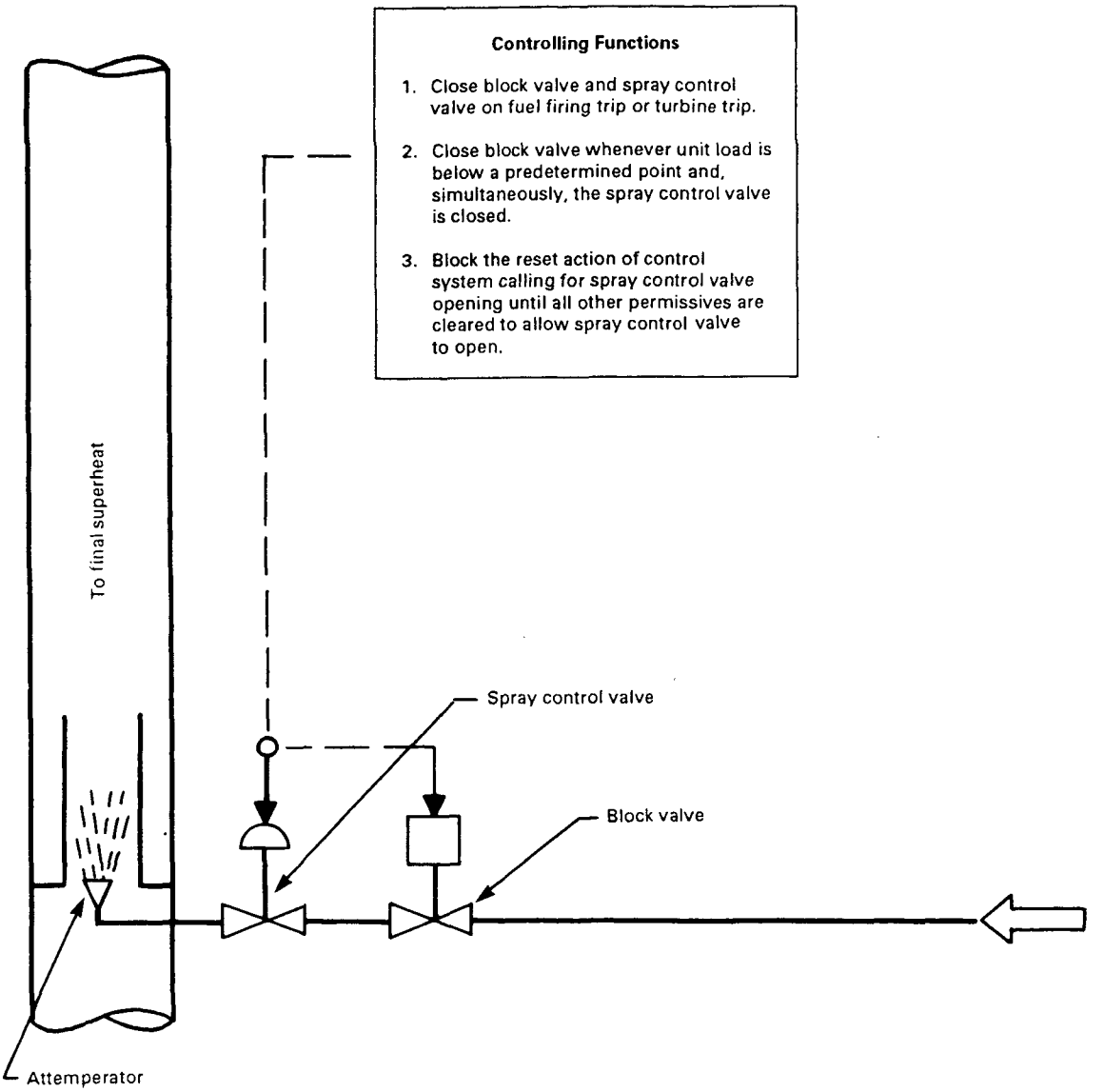

FIG. 3 TYPICAL SUPERHEATER SPRAY SYSTEM

be designed basically in accordance with the criteria set forth earlier in this Section for drain lines. This similarity should include the installation of power-operated valves, control room indication of valve position, and control room operation of the valves. The drain line, connection, and valve port should, however, be a minimum of $^{3}/_{4}$ in. I.D.

3.3.6 Drains should be provided between the main steam stop valve and first stage nozzles to ensure removal of water. These would consist of after-seat drains on the main steam stop valve, before and after-seat drains on the control or admission valves, and low point drains on any of the main steam piping downstream of the control valves. These drains should

Copyright ASME International
Provided by IHS under license with ASME
No reproduction or networking permitted without license from IHS
Not for Resale

be designed basically in accordance with criteria set forth earlier in this Section for drain lines. This similarity should include the installation of power-operated valves, control room indications of valve position, and control room operation of the valves. The drain lines, connections, and valve ports should, however, be a minimum of $\frac{3}{4}$ in. I.D.

3.4 Cold Reheat Piping

3.4.1 Numerous occurrences of turbine water induction damage have been attributed to the presence of water in the cold reheat line. This water is usually introduced into the system from either the reheat attemperator spray station or the feedwater heaters which extract steam from the cold reheat line. The design of a drainage system with sufficient capacity to remove all water that can be introduced into the cold reheat pipe from these sources is considered impractical because of the high rate of flow into the piping. For this reason the recommended system is designed to provide a signal to permit operator action to stop water inflow.

3.4.2 Provide a drain pot at the low point of each cold reheat line, preferably as close to the turbine as possible. This pot should be fabricated from 6 in. or larger diameter pipe and be no longer than is required to install level sensing equipment. If there is a low point in the cold reheat line other than that near the turbine (either in the cold or hot condition) which is upstream of the attemperator or the extraction supply to the feed-water heaters, an additional drain pot should be installed at this point for increased protection.

3.4.3 Each pot should be provided with a drain line of nominal 2 in. minimum size and a full size and full ported automatic power-operated drain valve. The valve should be arranged to fail open if such a choice is available.

3.4.4 To help ensure that the pot remains dry during normal unit operation, the pot and connecting piping should be fully insulated.

3.4.5 Each drain pot should be provided with a minimum of two level sensing devices (see Fig. 4). The first level (high level) shall actuate to fully open the drain valve and shall initiate an alarm in the main control room indicating that the valve has opened. The second level (high-hi level) shall initiate a high-hi level alarm in the control room.

3.4.6 The drain valve control should provide the following features:

(a) open automatically on high water level in the drain pot (see para. 3.4.5);

(b) ability to be opened or closed by remote manual controls in the main control room with a high level control capable of overriding the manual closed position;

(c) position indication in the control room.

3.4.7 When a cooling steam pipe is provided from the cold reheat pipe to the intermediate pressure turbine, this pipe should not be connected at or near the low point of the cold reheat pipe. If routing of the cooling steam pipe creates a low point, a continuous drain should be provided from the cooling steam pipe.

3.4.8 In addition to the drain pot and level switches to detect water in the system, thermocouples can be installed on the pipe or in wells. Two thermocouples, one on the cold reheat pipe close to the turbine connection and one on the bottom of the horizontal run below the turbine, can be used to detect water by differential temperature. This system, however, should not be considered as a substitute for the drain pot and level switches.

3.5 Reheat Attemperator

3.5.1 Spray water injection in the cold reheat line is used as a means to control steam temperature at the outlet of the reheater. These sprays are not effective or required for reducing final reheat steam temperature when used at low loads or during turbine rolling. Most incidents of turbine water damage caused by attemperators have occurred during these periods as a result of over-spraying. The water thus formed accumulates and, in most cases because of low steam velocity and the arrangement of the piping, flows back to the turbine. Another possibility, that occurs less frequently, results when water accumulates from condensation in pendant elements of the reheater during a low load operation. The water can then be injected into the turbine if flow is increased rapidly.

3.5.2 A power-operated block valve should be installed in series with the attemperator spray control valve. This valve provides tight shutoff to prevent water leaking past the spray control valve and provides a backup in the event that the spray control valve fails to close when required (see Fig. 5). The spray control and block valves constitute a double line of defense against the inadvertent introduction of spray water into the cold reheat lines. Since spray control valves are susceptible to leakage, additional protection can be obtained by use of a second block valve.

Copyright ASME International
Provided by IHS under license with ASME
No reproduction or networking permitted without license from IHS

Not for Resale

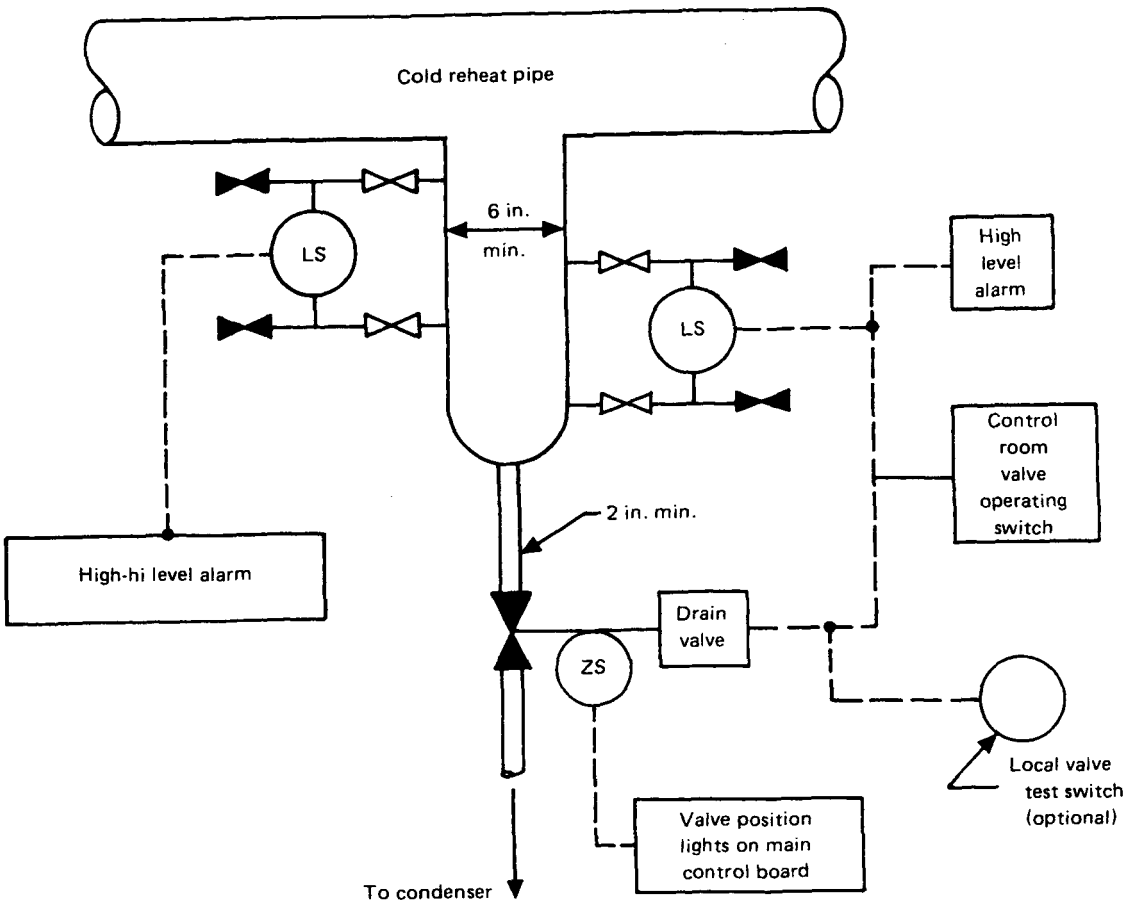

FIG. 4 TYPICAL COLD REHEAT DRAIN SYSTEM

3.5.3 The control system should automatically close and override all manual and automatic settings of the reheat spray control and block valves when the master fuel trip actuates or the turbine trips.

3.5.4 The block valve should be automatically closed below a predetermined minimum load and any time the demand signal to the control valves does not call for spray. Reheat spray should not be released for automatic control at loads where it can be determined that it is relatively ineffective in reducing final reheat steam temperature. The loads used should be in accordance with the boiler manufacturer's recommendations. Manual control must not prevent the automatic protection features specified in para. 3.5.3 from operating in the event the master fuel trip actuates or the turbine trips.

3.5.5 The control system for opening the spray control valve should be designed to prevent the sudden injection of large quantities of water.

3.5.6 A manually-operated drain valve should be installed between the power-operated block valve and the spray control valve. This connection can be equipped as a *tell-tale* for periodically testing for block valve leakage.

3.5.7 A manual bypass valve around the spray control valves is not recommended. If this recommendation is not followed, administrative control should be used to reduce the inherent possibilities of water induction.

Copyright ASME International
Provided by IHS under license with ASME
No reproduction or networking permitted without license from IHS

Not for Resale

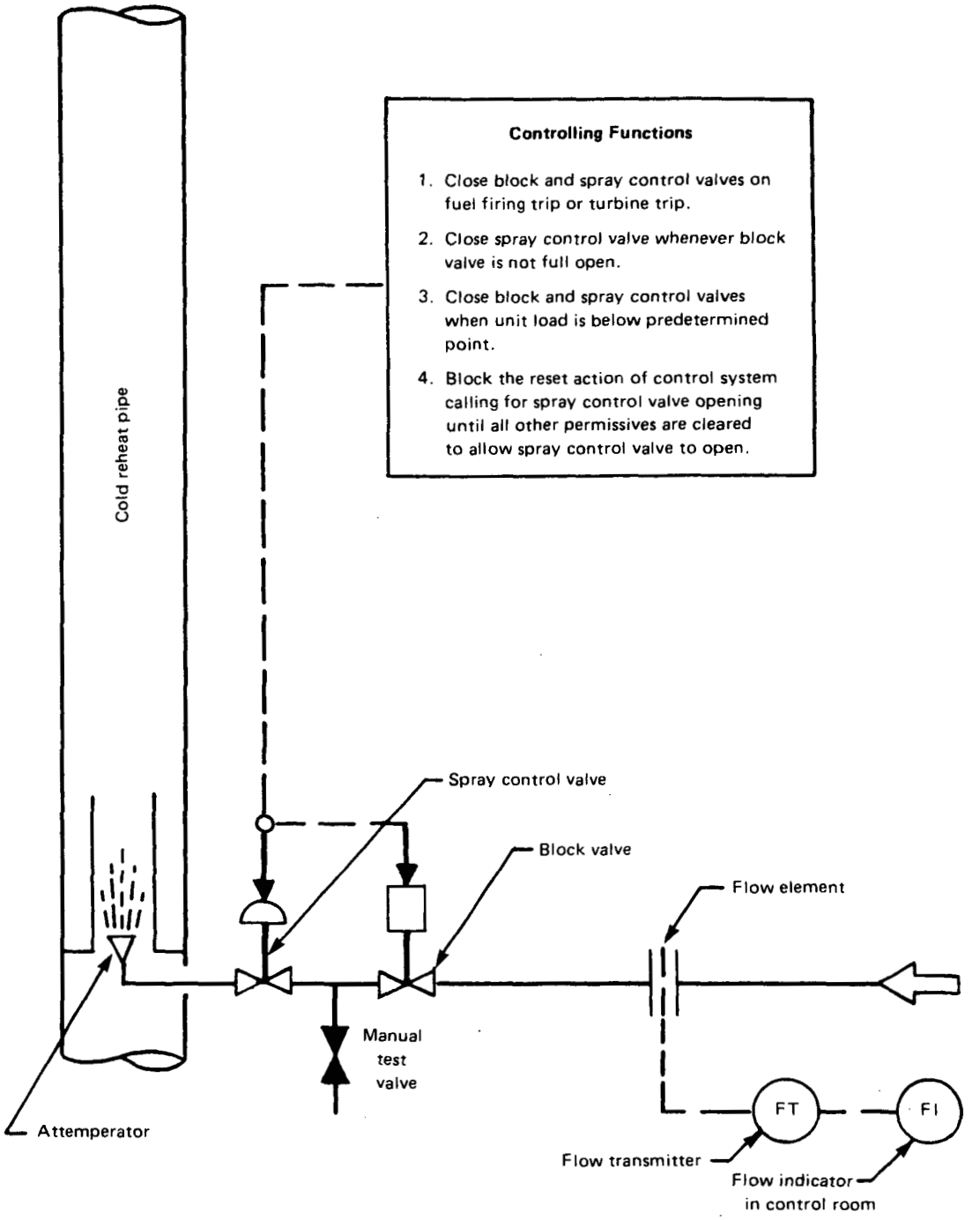

FIG. 5 TYPICAL REHEATER SPRAY SYSTEM

Copyright ASME International
Provided by IHS under license with ASME
No reproduction or networking permitted without license from IHS
Not for Resale

3.5.8 A bypass of the block valve should not be provided under any circumstances.

3.5.9 Instrumentation should be supplied, as indicated in Fig. 5, that will indicate the flow rate of spray water going to the spray attemperator.

3.6 Hot Reheat Piping

3.6.1 The design of the drainage system for hot reheat piping and associated equipment is similar to the drain system outlined previously for the main steam system.

3.6.2 The equipment required for the hot reheat steam piping system to preclude the induction of water into the turbine consists of drain systems to remove water prior to and during initial rolling of the machine.

3.6.3 All low points in the hot reheat piping system should be drained to remove water prior to initial start-up. Care should be taken with respect to the hot and cold positions to ensure that the actual low point is drained. Where horizontal runs of extended length exist, the low point should be considered as the downstream end of this section of piping.

3.6.4 Prior to starting the turbine the hot reheat piping will be at condenser pressure. Therefore, a minimum 4 in. connection approximately 9 in. long should be installed to provide for gravity drainage at low loads. This 4 in. pipe should be reduced to minimum of NPS $1\frac{1}{2}$ and piped to the condenser through the shutoff valve of para. 3.6.5.

3.6.5 A full ported power-operated drain valve, with full open and closed position indication in the control room, should be located in the $1\frac{1}{2}$ in. drain line and should be operable from the main control room. Where the user requires more than one valve in these drain lines, at least one of these should be power-operated. The second of these two valves should be kept open by locking or other acceptable means or procedures. Drain valves are often located for ease of maintenance: however, it is suggested that the power-operated drain valve be located in the drain close to the 4 in. pipe. This will reduce that amount of water entrapped upstream of the (closed) drain valve.

3.6.6 Because of various arrangements of the reheat stop and intercept valve used by the turbine manufacturers, their recommendation for drains in and adjacent to the reheat stop and intercept valves should be used. Design of these drains should be consistent with the recommendations of this Standard.

3.7 Feedwater Heaters and Extraction Systems

A major cause of turbine damage has been water induction from the extraction system, feedwater heaters, and associated drains. Therefore, it is important to pay considerable attention to the design of these areas. Following are recommendations for the design of the extraction system to minimize the possibility of water damage to the turbine.

3.7.1 Because of the severity of damage that can occur due to water entering the turbine from an extraction point, it is recommended that the system be designed so that NO SINGLE FAILURE OF EQUIPMENT SHOULD RESULT IN WATER ENTERING THE TURBINE. Two independent means of automatically preventing water from entering the turbine from the extraction system should be provided.

In general these independent means can be a combination of the following items (a) and (b) or (a) and (c):

(a) the automatic drain system from the heater shell (see para. 3.7.1 and Fig. 6);

(b) automatic shutoff valves between the feedwater heater and the turbine and in cascading drain lines (see para. 3.7.1.2 and Fig. 7);

(c) automatic shutoff valves on all sources of water entering the heater shell and tubes (see para. 3.7.1.3 and Fig. 8).

3.7.1.1 Figure 6 shows the normal primary drain line with its associated level sensor and an automatically operated alternate drain and its level sensor. The alternate drain is provided to discharge directly to the condenser. In the case of some low pressure heaters with internal drain coolers, it may be desirable to connect the alternate drain directly to the heater shell ahead of the drain cooler to assure positive drainage.

3.7.1.2 Automatic shutoff valves in the extraction line from the turbine to the feedwater heater and the associated equipment are shown in Fig. 7. These valves are actuated by a high-hi level in the feedwater heater with a control independent from that used in para. 3.7.1.1 above.

Actuation of these valves indicates that the heater drainage system shown in Fig. 6 is not capable of draining the heater. Therefore, cascaded drains to this feedwater heater should be designed to automatically close on this high-hi level. This cascaded drain flow

Copyright ASME International
Provided by IHS under license with ASME
No reproduction or networking permitted without license from IHS Not for Resale

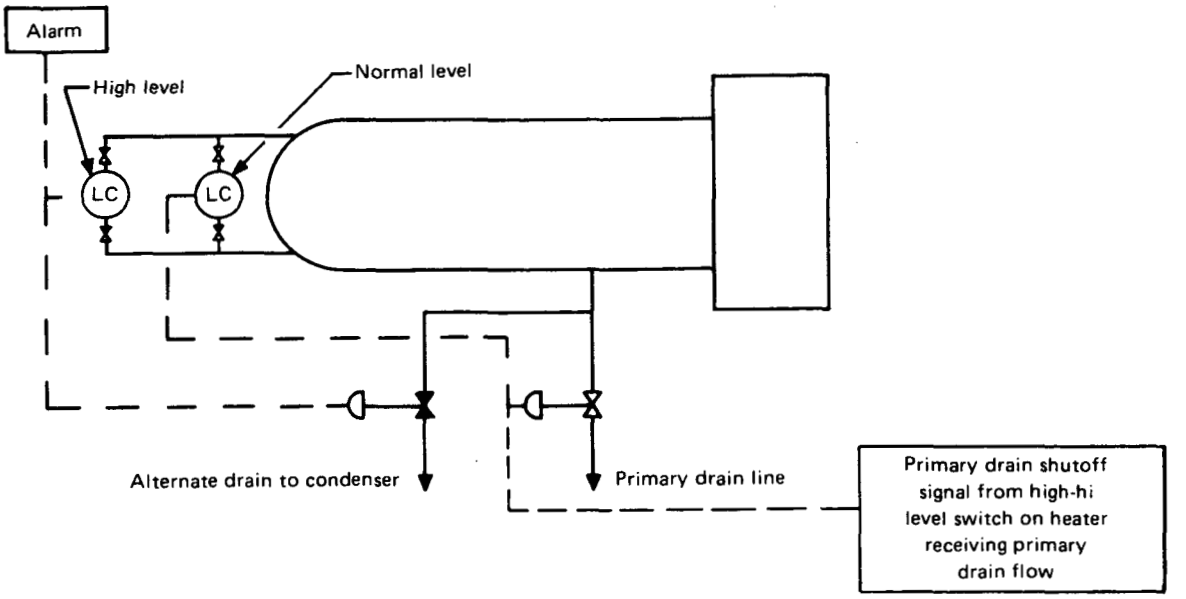

FIG. 6 TYPICAL HEATER DRAIN SYSTEM

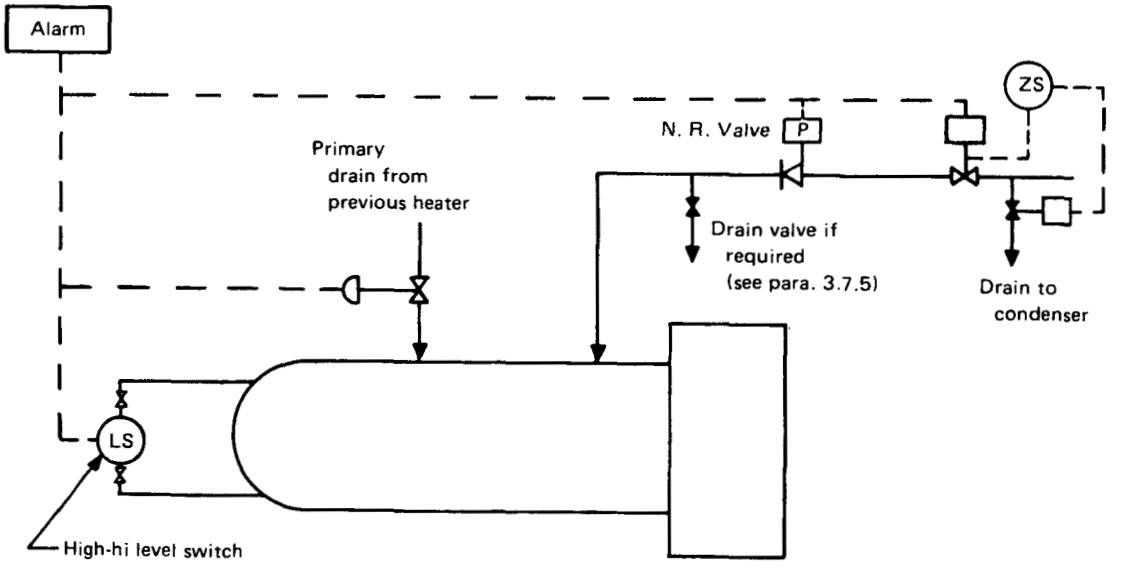

FIG. 7 TYPICAL HEATER STEAM SIDE ISOLATION SYSTEM

Copyright ASME International
Provided by IHS under license with ASME
No reproduction or networking permitted without license from IHS
Not for Resale

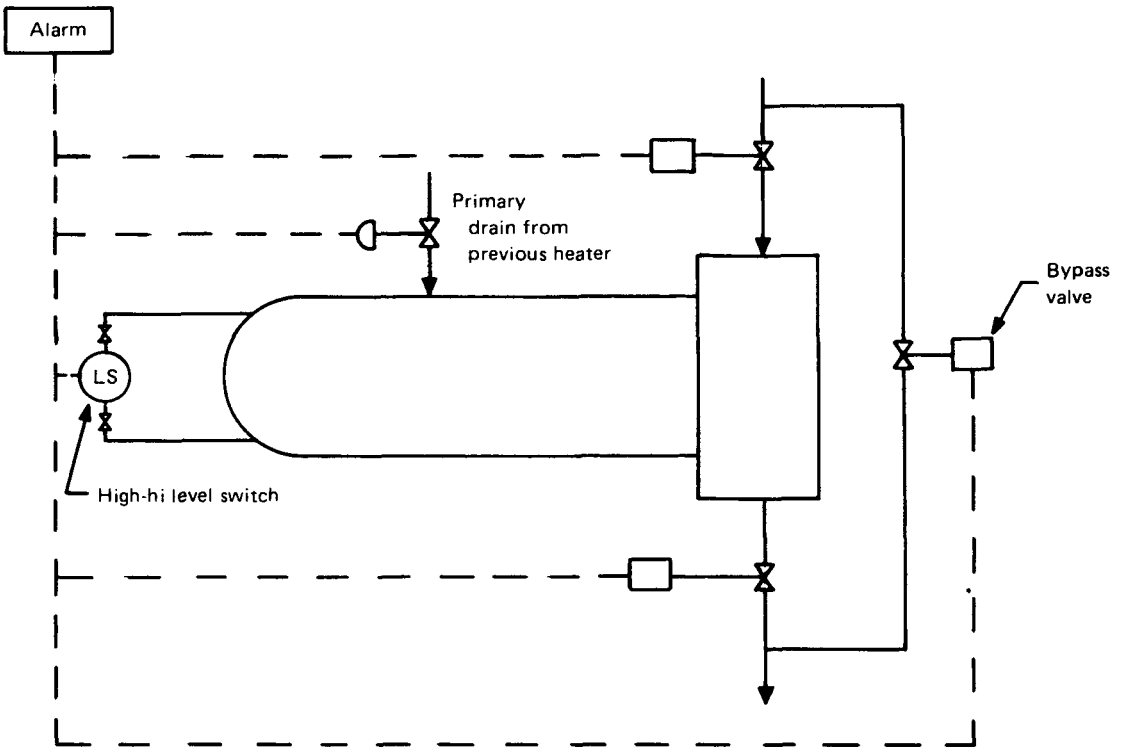

FIG. 8 TYPICAL TUBE SIDE ISOLATION SYSTEM

from the previous heater will then be bypassed to the condenser through its alternate drain.

The required speed of operation of the automatic shutoff valves depends on the total amount of excess water flowing to the heater and the volume between the high-hi level alarm and the shutoff valve. The total amount of excess water flowing to the heater for purposes of this calculation should be the larger of:

(a) water flowing from two ruptured tubes (four open ends);

(b) water equivalent to 10% of the tube side flow.

For these two conditions, it is assumed that the normal heater drain or its alternate to the condenser is capable of draining the water that is cascaded to the heater from previous heaters and from the normal stage extraction flow for this heater. The maximum flow of water from condition (a) or (b) above is then considered to be contributing to a rising level in the heater. The required time of operation of the shutoff valve is then calculated by using the larger flow rate of the above two conditions and the usable pipe and heater storage volume between the high-hi level alarm and the shutoff valve. With some heater arrangements such as vertical heaters or heaters at or above the turbine, care must be taken in determining usable storage volume.

Check valves, either of the free swing, power assisted, or positive closing design, are not considered a satisfactory shutoff valve for this application because of possible seat and disk distortions. These check valves are normally provided for fast action to limit overspeed due to entrained energy in the extraction system. They can afford some protection from a water induction standpoint, however, and they should be closed automatically by the same signal that closes the shutoff valve. They may be located on either side of the shutoff valve.

3.7.1.3 It may be impractical to install the shutoff valves as in Fig. 7 for feedwater heaters in the condenser neck. Therefore, an acceptable alternative to the second line of defense shown in Fig. 7 is to bypass the feedwater heaters as noted in Fig. 8. This will remove the heater from service and cut off the source of water that results from tube leaks. The required speed of operation of these automatic isolation and bypass valves

Copyright ASME International
Provided by IHS under license with ASME
No reproduction or networking permitted without license from IHS
Not for Resale

should be determined according to the method of para. 3.7.1.2 based on filling the heater to the top of the shell. Drains cascaded into the heater must also be automatically shut off from the high-hi level switch.

3.7.1.4 Occasionally, small bypass valves are installed around the tubeside isolation valves, shown in Fig. 8. These are generally used to equalize the pressure on each side of these large isolations valves in order to open them. Where such bypass valves are provided, they should be power-operated and close automatically on the same signal that closes the larger valves.

3.7.2 Baffles placed above the water level in feedwater heaters are frequently required to control the rate of steam flow back into the turbine to limit the resulting energy contribution to overspeed. These baffles can also be useful in minimizing the amount of water entrained with the steam flowing back into the turbine following a turbine trip.

3.7.3 Suitable alarms should be provided for the benefit of the operator to indicate when the first and second lines of defense have been called into operation. This should be accomplished through the use of separate high and high-hi alarm annunciations in the control room. The high alarm should be an indication that the heater level has risen to the point where the alternate drain system is required to function. The high-hi alarm should be an indication that the heater isolation system (second line of defense) has been called into operation. The high-hi alarm is a warning to investigate and shut off the source of water. When a heater(s) is taken out of service automatically, it may be necessary to reduce load and/or steam temperature either automatically or manually in accordance with the turbine and boiler manufacturer's recommendations.

3.7.4 The physical arrangement of level alarms and heater drain piping should be such as to preclude unnecessary actuation from level surges during start-up and normal operation. The design of sensing piping and valves for level controls and sensors should be such that failure or maloperation will not render all lines of water induction protection inoperative.

3.7.5 A drain should be located at the low point in the extraction pipe between the turbine and block valve and routed separately to the condenser. A power-operated drain valve should be installed in this line that opens automatically upon closure of the block valve in the extraction pipe. Any other low points in the extraction lines should be similarly drained. These drain valves should have control room indication of open and closed positions. They should also have a manual override in the operating direction in the control room for use during start-up. These drains are provided to dispose of steam condensing in the extraction line when the block valve is closed. They do not constitute a line of defense as covered in para. 3.7.1. When there is more than one heater from a single extraction point, operation of the extraction line drain valve(s) depends on the design of the connecting extraction piping and the possibility for collection of water ahead of the drain valve above the closed block valve.

3.7.6 There should be no bypasses around extraction line shutoff or nonreturn valves.

3.7.7 Thermocouples may be installed in the turbine at locations determined by the turbine manufacturer or in the connecting steam piping to assist in locating sources of water that may enter the turbine.

3.7.8 In designing these protective systems, provision should be made in the design for periodic testing. (See Section 5 for testing.)

3.7.9 Other arrangements of feedwater heaters and bypasses are satisfactory, provided they accomplish the same purpose as the arrangement of Fig. 8.

3.7.10 For heaters in the condenser neck, margins for preventing water induction can be increased if subcooling zones are avoided and drains are not cascaded into these heaters.

3.7.11 Where a separate drain tank is employed with a low pressure heater, adequately sized vents and drains are essential. To account for possible flow restriction in the interconnecting pipe, a separate level sensor should be mounted on the heater and should operate the heater's isolation system.

3.8 Direct Contact (DC) Feedwater Heaters

3.8.1 The DC heater is a source of cold steam or water which can flow back to the turbine. A power assisted check valve(s) is normally provided in the extraction line to the DC heater. For plant cycles in which the DC heater is supplied from the same extraction line as the feed pump turbine or other unit auxiliaries (air preheating, station heating, etc.), the power assisted check valve(s) may be located in the common extraction header.

Copyright ASME International
Provided by IHS under license with ASME
No reproduction or networking permitted without license from IHS
Not for Resale

3.8.2 Two independent means of automatically preventing water from entering the turbine from the DC heater should be provided. In general, the protection arrangement can be a combination of the following items (a) and (b) or (a) and (c):

(a) automatic shutoff valve in the extraction line to the DC heater (see para. 3.8.3 and Figs. 9 and 10);

(b) automatic drain system from the DC heater storage tank or feed pump suction line (see para. 3.8.4 and Fig. 9);

(c) automatic block valves on all sources of water entering the DC heater (see para. 3.8.5 and Fig. 10).

3.8.3 In either protection arrangement, an automatic shutoff valve should be provided in the extraction line to the DC heater so located that it can isolate the heater from the extraction line but still permit extraction flow to the feed pump turbine. The operating speed of this valve should be fast enough so that during its travel time, the water inflow to the DC heater cannot fill the usable volume between the emergency high-hi level and the bottom of the extraction connection on the heater. For this determination the net inflow shall be considered to be the sum of the condensate flow from the low pressure heaters plus the cascading drain flow from the high pressure heaters. Care must be taken not to include any volume of the extraction line in this determination.

3.8.4 If a drain line from the DC heater storage tank or the feed pump suction line is provided as the second means of protection, it should discharge to either the condenser, a flash tank, or an external storage tank and should be activated on high-hi level in the DC heater storage tank. Figure 9 shows a typical arrangement of a drain from the DC heater storage tank and its associated level sensor. The drain connection at the storage tank should be located such that the tank is not drained dry if the drain valve should fail open. For a drain connection from the feed pump suction line, low DC heater water level protection should be provided for the feed pump in addition to the sensors shown in Fig. 9.

3.8.5 If block valves are used as the second means of protection, they should be power-operated and installed in series with the primary control valves in all water lines entering the DC heater. Feed pump recirculation and leakoff lines are not considered to be sources of water entering the DC heater. The block valves should be automatically closed on high-hi level in the DC heater storage tank. Figure 10 shows a typical arrangement for these block valves.

3.8.6 Three level sensors should be provided on the DC heater storage tank at separate predetermined levels above the normal operating level. When the water in the storage tank reaches the first level, high level, an alarm should be actuated in the control room. The primary control valves in the water lines to the DC heater should have been or now should be closed. If the water level continues to rise to the second level, high-hi level, the means of protection discussed in para. 3.8.4 or 3.8.5 should be activated and another alarm actuated in the control room. The automatic shutoff valve in the extraction line to the DC heater should be closed and a third alarm actuated if the level continues to rise to the third level, emergency high-hi level. The third level sensor may also be used to provide a redundant signal to the means of protection activated by the second level sensor.

3.8.7 Location of drains, valving, and the alarms provided should be as previously mentioned (see paras. 3.7.3 and 3.7.5). The effects of net positive suction head decay on the feed pump during the transient period following the closure of the automatic shutoff valve in the extraction line to the DC heater should be considered. The designer should consider the introduction of pegging steam in the development of his detail design to assure against water induction with the failure of a single drain valve.

3.9 Turbine Steam Seal Systems

Water induction through the steam seal system can cause serious damage to turbines, especially in the high or intermediate pressure elements having metal temperatures much greater than the temperature of water or saturated steam entering accidentally through the steam glands. Precaution should be taken to prevent water or saturated steam from entering the steam seal system.

3.9.1 Pipes feeding steam to steam seal systems should be pitched ($\frac{3}{4}$ in./ft, min.) toward the source of steam (main, auxiliary, or cold reheat steam). Refer to Fig. 11. If these pipes are not pitched to their sources, there must be a drain on the inlet side of each valve to avoid accumulation of water that can be injected into the seal system when a regulating valve opens. This must be a continuous orificed drain.

Copyright ASME International
Provided by IHS under license with ASME
No reproduction or networking permitted without license from IHS Not for Resale

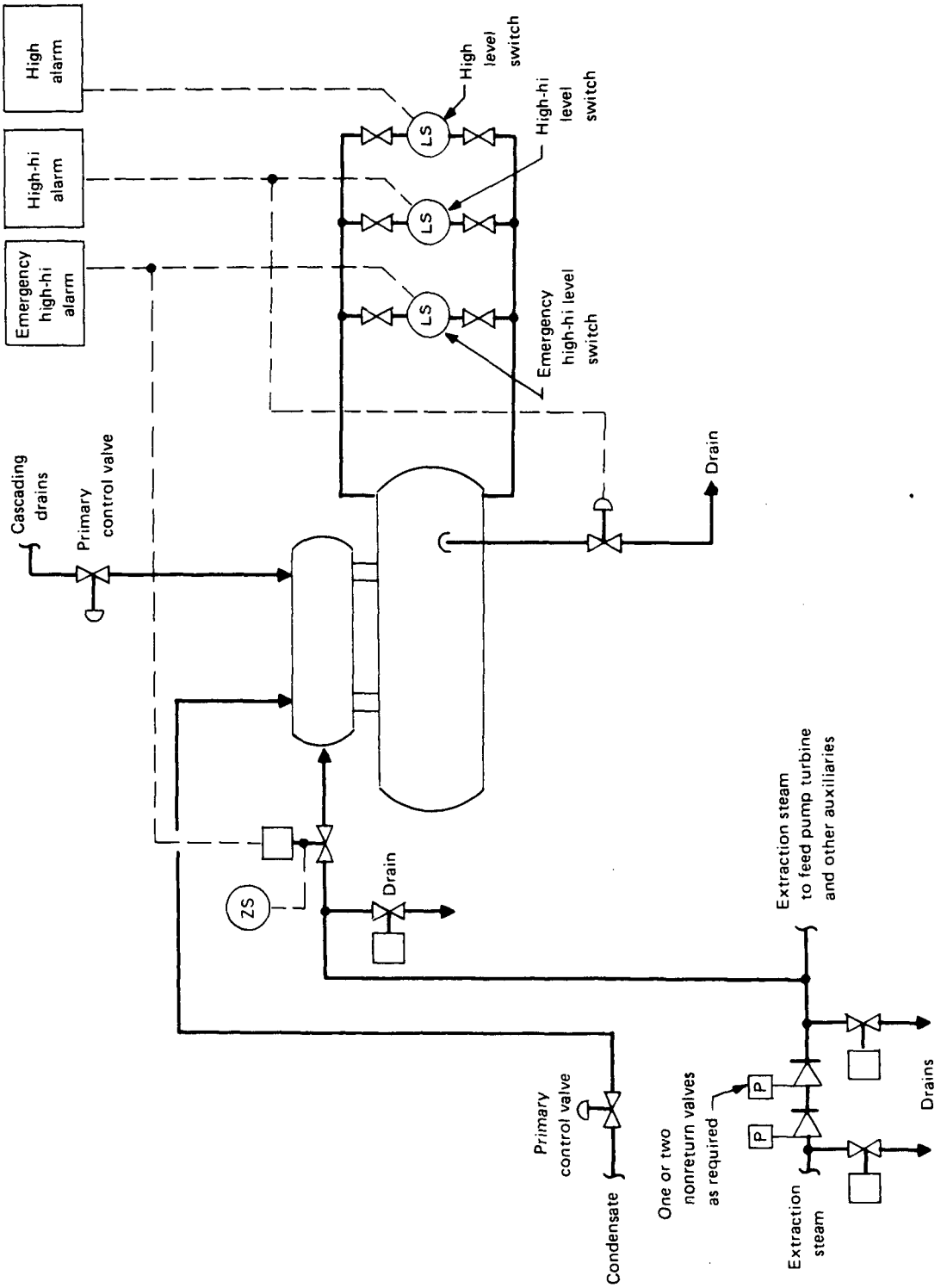

FIG. 9 TYPICAL SCHEMATIC ONLY (For detailed recommendations see paras. 3.8.1 through 3.8.7)

Copyright ASME International
Provided by IHS under license with ASME
No reproduction or networking permitted without license from IHS

Not for Resale

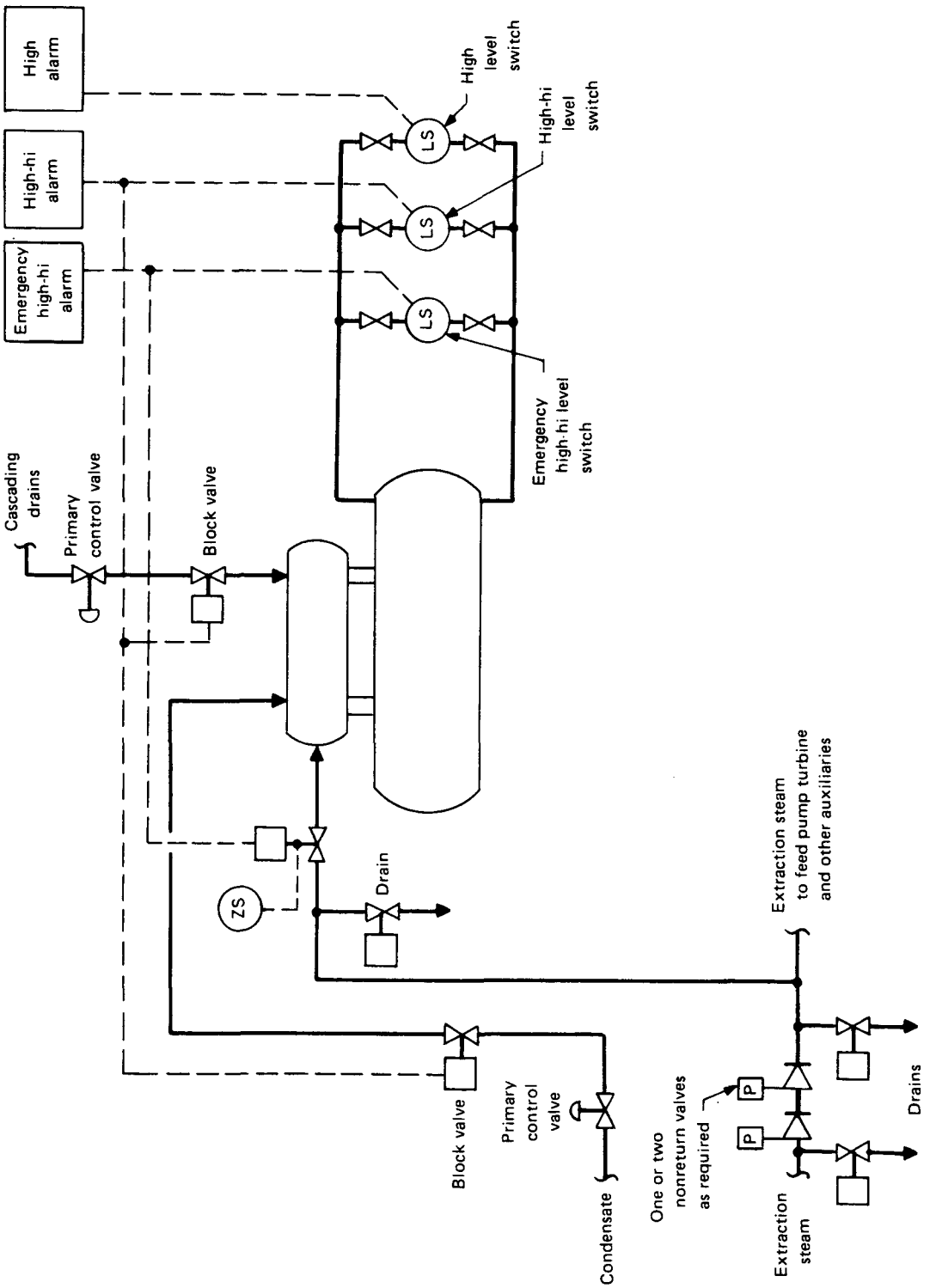

FIG. 10 TYPICAL SCHEMATIC ONLY (For detailed recommendations see paras. 3.8.1 through 3.8.7.)

Copyright ASME International
Provided by IHS under license with ASME
No reproduction or networking permitted without license from IHS

Not for Resale

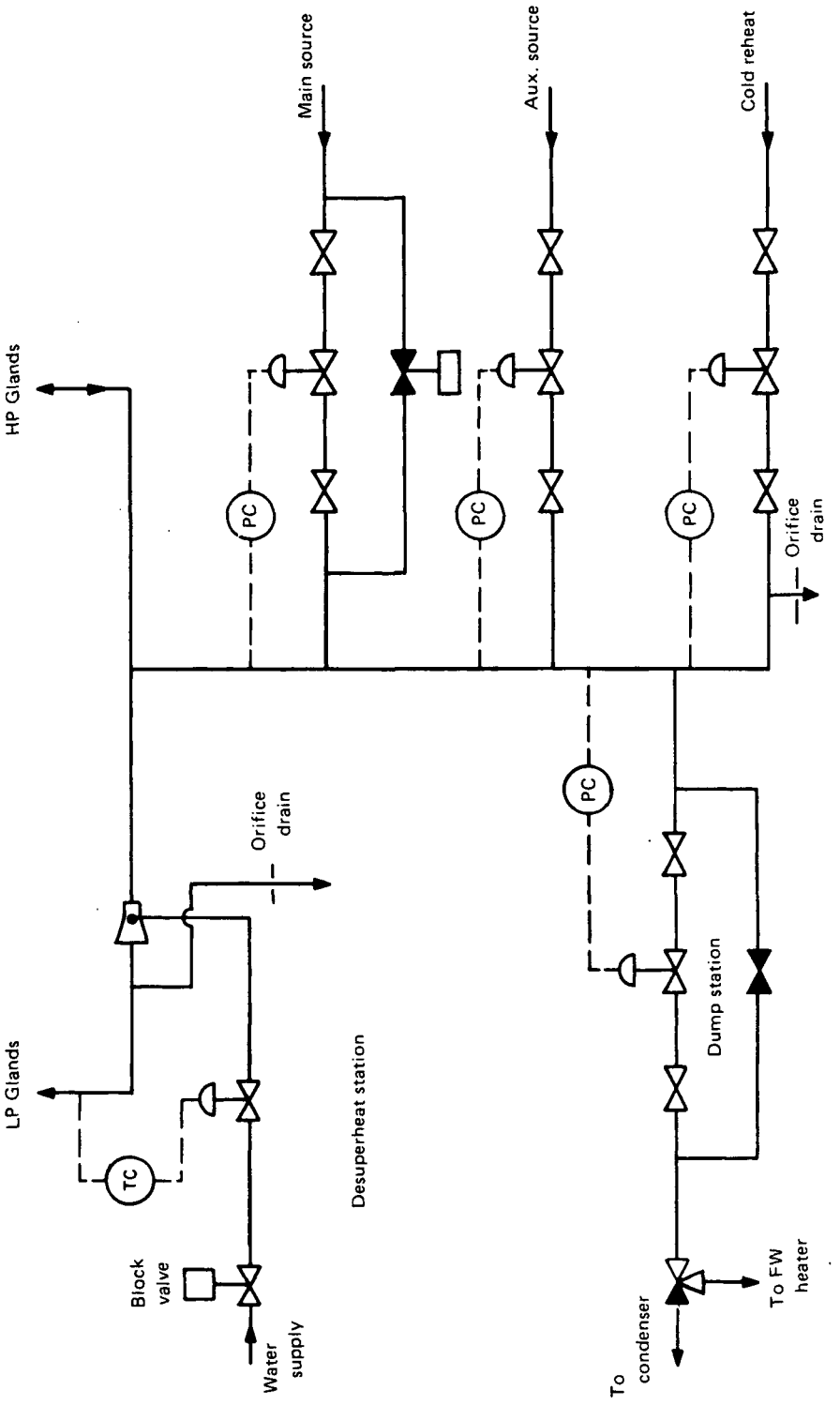

FIG. 11 MAIN TURBINE — TYPICAL STEAM SEAL ARRANGEMENT

Copyright ASME International
Provided by IHS under license with ASME
No reproduction or networking permitted without license from IHS

Not for Resale

3.9.2 Pitch the pipes of the steam seal system (1/4 in./ft, min.) between the turbine and the gland header so that they are self-draining to the header. If there are low points in this piping system, they should be drained to the gland condenser or main condenser using continuous orificed drains. Drain pipe bore and shutoff valve port should not be less than 3/4 in.

3.9.3 Pitch the pipes between the turbine and gland condenser (1/4 in./ft, min.) so that they are self-draining to the gland condenser. If there are low points in this piping system, they should be drained to the same pipe at a lower elevation or through a loop seal to a drip tank or atmosphere.

3.9.4 If a desuperheater spray station is used, a power-operated block valve for remote-manual operation should be used to prevent water flow into the steam seal header when the steam seal system is out of service.

3.9.5 There should be a drain downstream of the steam seal system desuperheater that is designed to handle all of the water that can be injected into the steam seal piping with the spray valve in the wide open position. This should be a continuous drain routed to the gland condenser or main condenser. The configuration of piping should be such that spray water cannot enter the high pressure steam seal piping.

3.9.6 A connection of a pipe serving as a source for seal steam (i.e., main steam, cold reheat, or auxiliary source) should be located on a vertical leg or from the top of a horizontal run of piping.

3.9.7 Excess steam from the gland steam header may be routed to a low pressure feedwater heater and/or the condenser. However, if this steam is routed to a low pressure heater, it should be diverted automatically to the condenser when the heater is out of service or at low loads when the steam temperature exceeds the allowable temperature of the heater.

3.9.8 If an auxiliary boiler or other source is used to supply seal steam, the power plant designer must consider the temperature-flow characteristics of auxiliary boilers or other sources to ensure that the temperature of the seal steam satisfies the turbine manufacturer's requirements.

3.10 Boiler Feed Pump Turbine Steam Supply

A boiler feed pump (BFP) turbine may receive throttle steam from different sources, and it is possible to have water in these piping systems. The following design guidelines are provided to assist designers in developing piping systems to prevent the induction of water into the main turbine through BFP turbine throttle steam supply lines.

3.10.1 Each BFP turbine throttle steam pipe connected to the main turbine piping (i.e., extraction and/or cold reheat) should contain not less than one nonreturn valve and shutoff valve. Refer to Figs. 12 and 13. The nonreturn valve(s) may be power assisted according to the requirements of the main turbine and actuated by a main turbine trip. The number of nonreturn valves is to be determined by the main turbine manufacturer. The nonreturn valves should be located so that they prevent steam bypassing from one main turbine extraction zone to another.

3.10.2 All throttle steam pipes to BFP turbines should be heated at all times so that they are available for immediate service. Remote power-operated drains and above-seat drains shown in Figs. 12 and 13 should be considered typical. The power plant designer should determine location of the warning orifices on the basis of the actual piping arrangement. Valve position indicators should be located in the control room.

3.10.3 Provide a drain with a power-operated valve on each side of the nonreturn valve station. (A second drain may not be required if the pipe configuration is self-draining.) Bypass each drain valve with a continuous orificed drain as shown in Fig. 14. The power-operated drains are used to heat the BFP turbine throttle steam pipes. Use the BFP turbine stop valve above seat drains if permitted by the manufacturer and if of adequate capacity. Otherwise, provide a separate drain system on the turbine side of the nonreturn valve station.

3.10.4 When a desuperheater is required (external to a package boiler) to control the temperature of the steam to the BFP turbine, provide an automatic drain downstream of this desuperheater station that is adequate to drain the maximum quantity of water that can be injected into the pipe.

Use a level sensing device mounted on a drain pot to control the automatic drain valve (Figs. 12 and 13) and alarm in control room. Provide a power-operated

Copyright ASME International
Provided by IHS under license with ASME
No reproduction or networking permitted without license from IHS Not for Resale

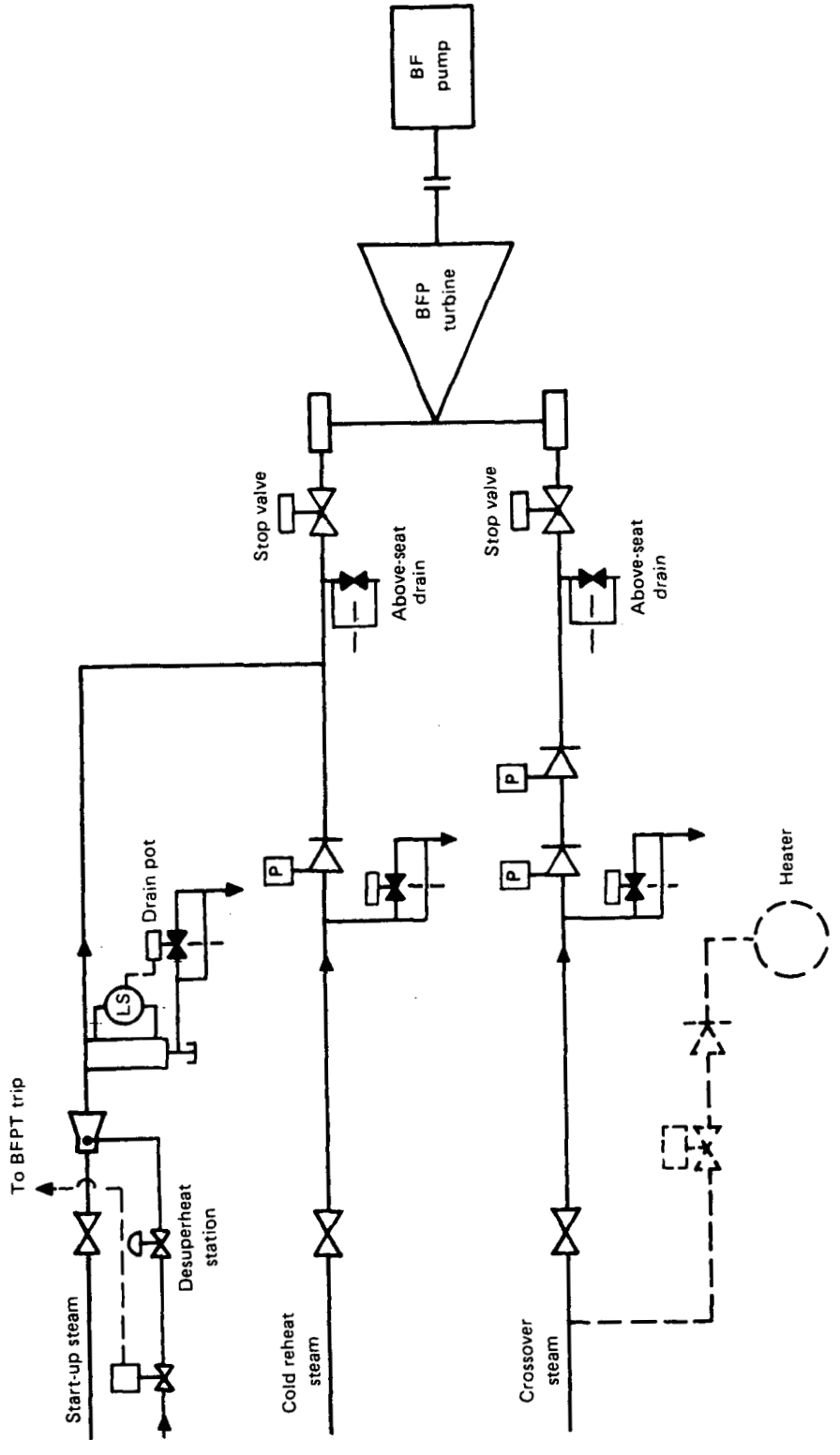

FIG. 12 TYPICAL ARRANGEMENT FOR A BOILER FEED PUMP TURBINE STEAM SUPPLY WITH DUAL ADMISSION

Copyright ASME International
Provided by IHS under license with ASME
No reproduction or networking permitted without license from IHS

Not for Resale

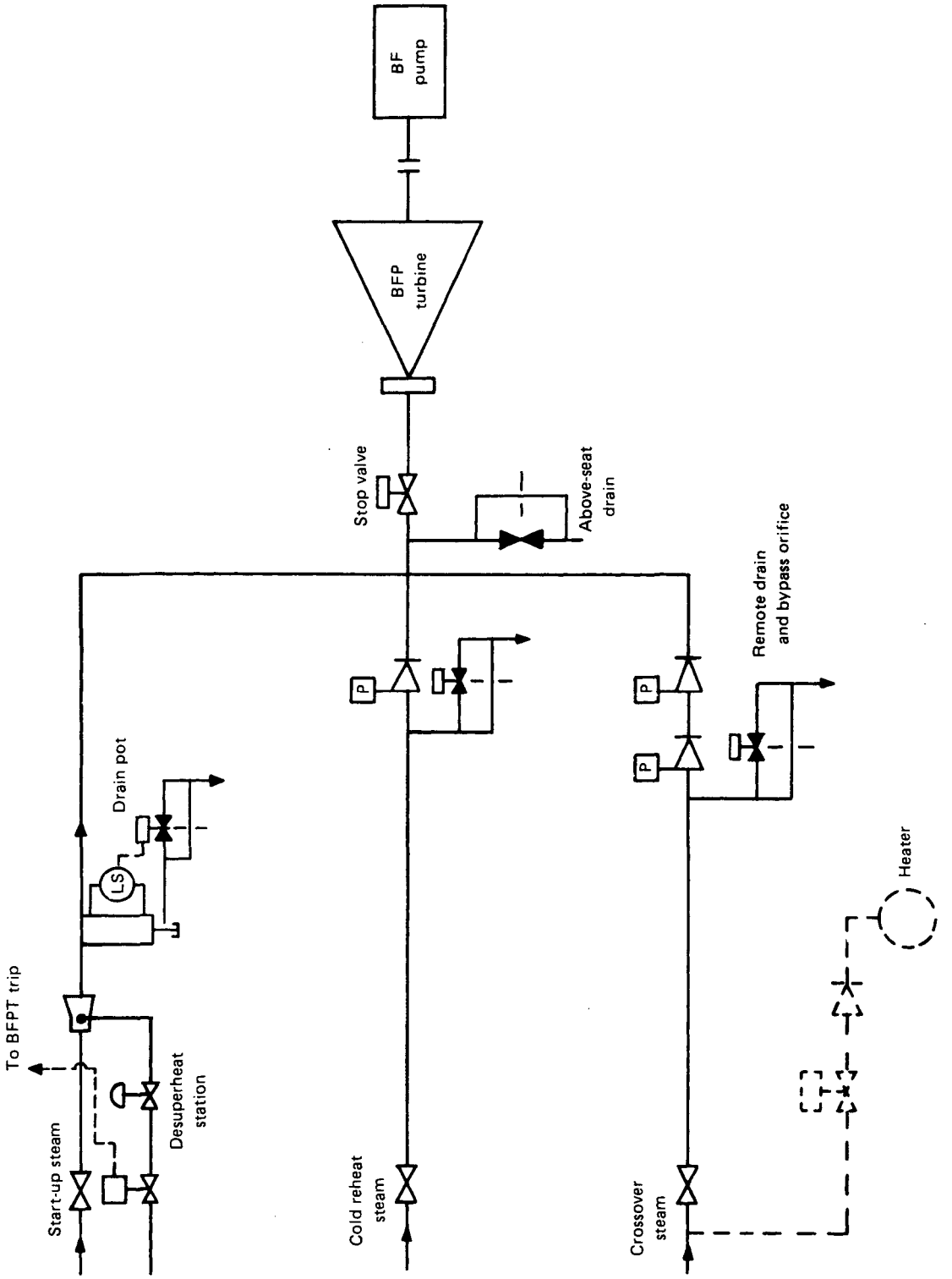

FIG. 13 TYPICAL ARRANGEMENT FOR A BOILER FEED PUMP TURBINE STEAM SUPPLY WITH SINGLE ADMISSION

Copyright ASME International
Provided by IHS under license with ASME
No reproduction or networking permitted without license from IHS

Not for Resale

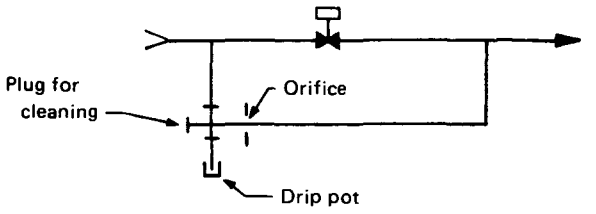

FIG. 14 TYPICAL CONTINUOUS DRAIN ORIFICE

valve in the spray water pipe ahead of the spray control valve to permit positive shutoff of spray water when the associated steam supply line is out of service and when the BFP turbine is tripped. (See Section 5 for testing.)

3.10.5 A connection on piping serving as a source of throttle steam for a BFP turbine (i.e., main steam, cold reheat, or auxiliary source) should be located on a vertical leg well above the low point in the source pipe or from the top of a horizontal run of piping.

3.11 Drain Systems — Turbine and Cycle Piping

The following are general design rules for drain systems. They are an accumulation of past successful design practices. These recommendations should be used in conjunction with the specific drain recommendations made by the manufacturer to the various pieces of equipment.

3.11.1 Drain lines should be designed for both hot and cold conditions and should have a continuous slope in the direction of flow to the terminal point. Any loops required for flexibility should be in the plane of the slope or in vertical runs.

3.11.2 All drain and manifold connections at the condenser shell must be above the maximum hot-well level.

3.11.3 Drain lines in exposed areas should be protected from freezing.

3.11.4 Drain line isolation valves that are not normally used during start-up and operation should be kept open by locking or other acceptable means or procedures.

3.11.5 Drain piping from the connections provided by the turbine manufacturer should be large enough to ensure adequate flow area for the volume increase following critical pressure drop through the drain valve.

3.11.6 Continuous drain orifices, when used, should be located and designed so that they may be cleaned frequently and will not be susceptible to plugging by debris. Shown in Fig. 14 is an arrangement that has given good service.

The drip pot or dirt catcher may be capped, flanged, or provided with a blowdown valve for occasionally cleaning out the pocket. Strainers may be used upstream of the orifice for additional protection.

3.11.7 Drains and valve ports should be sized for the maximum amount of water to be handled under any operating condition, but in no case should they be less than $\frac{3}{4}$ in. I.D. Consideration should be given to the pressure difference that exists during various operating modes so that the drain line will be designed to handle the maximum expected flows under the minimum pressure differential conditions.

3.11.8 Turbine and extraction line drain valves should be power-operated. These valves should be set to open automatically on a turbine trip and be remotely operable in the control room. Extraction line drain valves should also open automatically on high-hi level in the associated heater. If desired, a control switch may be used to operate more than one remotely operable drain valve; however, grouping valves together on a common control switch requires that it be acceptable for all of them to open or close at the same time under all operating conditions. (See para. 3.7.5 and the turbine manufacturer's drain operating recommendations for suggested groupings.)

3.11.9 Steam traps are not satisfactory as the only means of drainage of critical drain lines. They may be used in parallel with automatically operated drain valves.

3.11.10 Drain lines may be routed separately to connections or to manifolds mounted on the condenser shell. The following recommendations apply to these drain manifolds:

(a) The cross-sectional area of each manifold should be large enough to assure that the manifold internal pressure with all simultaneous drains open is lower than that of the lowest pressure drain into the manifold. Straight or L-shaped manifolds as shown in Fig. 15 are acceptable.

Copyright ASME International
Provided by IHS under license with ASME
No reproduction or networking permitted without license from IHS

Not for Resale

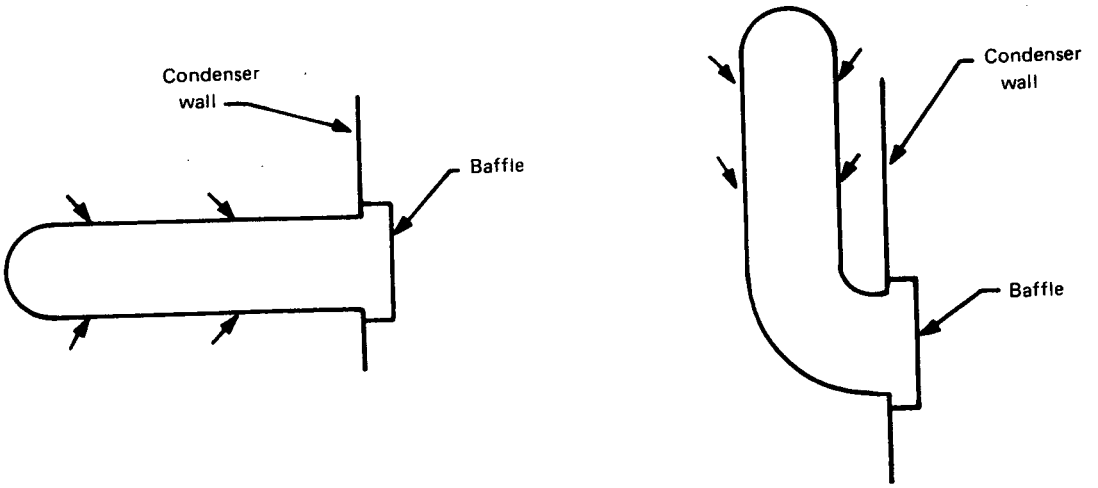

FIG. 15 TYPICAL CONDENSER DRAIN MANIFOLDS

(b) It a baffle is used, the free area at the discharge of the manifold should not be less than $1\frac{1}{2}$ times the internal cross-sectional area of the manifold. The baffle should be arranged so that it does not interfere with proper functioning of adjacent baffles.

(c) Drain lines to the manifolds should be mounted at 45 deg. to the manifold axial center line, with the drain line discharge pointing toward the condenser. The drain lines should be arranged in descending order of pressure, with the drain from the highest pressure source farthest from the manifold opening at the condenser wall. Drain manifolds at the condenser should be located in accordance with the condenser manufacturer's recommendation.

(d) The drains to manifolds should be grouped in approximately the same operating pressure ranges. Ideally, manifolds should contain drains from the same area of the cycle or turbine. Care should be taken in routing drains together from different sections of a pipe line that can experience extreme differences in pressure due to closing of isolation valves. The turbine manufacturer's recommendations should be considered for proper grouping of turbine drains.

(e) On side or top exhaust turbine-condenser arrangements, it may be impossible to drain to the condenser. In this case, other provisions, such as a separate drain tank, must be made.

When side exhaust condensers are used the hotwell level is closer to the turbine than with downward exhaust. Care should therefore be taken not to discharge steam directly into the hotwell to avoid spraying water into the last stage buckets.

3.11.11 Drainage from vessels such as feedwater heaters, steam jet ejectors, gland steam condensers, etc., that drain water continually, must not be routed to drain manifolds.

3.11.12 Pipes discharging steam to the condenser from turbine (steam dump) valves that are automatically operated by the turbine control system (ventilator valves, blowdown valves, equalizer valves, etc.) must not be connected to turbine drain manifolds, but must be routed separately to the condenser. These pipes should be pitched to the condenser, so there are no low points to collect water. Spray attemperators introducing water in these discharge lines to the condenser should be arranged to shut off whenever there is no flow from the valves. This is to prevent possible back flow of water into the turbine when vacuum is broken in the condenser. One way to accomplish this is to automatically shut off the flow of water from the attemperator sprays whenever the pressure ahead of the valve reaches a predetermined low value or when the steam dump valve is closed. Valve position alone is not adequate since many of these valves are open continuously while the turbine is shut down and attemperator spray flow is not required at this time.

Copyright ASME International
Provided by IHS under license with ASME
No reproduction or networking permitted without license from IHS
Not for Resale

3.11.13 Remote position indication of all power-operated drain valves should be provided in the control room.

3.11.14 Limit switches to indicate the full open and full closed positions of valves are adequate as remote position indication of drain valves.

3.11.15 Thermocouples in drain lines may be useful in assuring that drain lines are not plugged.

3.12 Condenser Steam and Water Dumps

Improperly designed steam and water dumps to the condenser can cause turbine casing distortions and damage to stationary and rotating turbine parts comparable to that caused by water from extraction, main steam, and reheat lines. The damage has consisted of low pressure inner casing distortion leading to severe packing rubs, permanent distortion of horizontal joints that can not be closed, bucket/blade damage, and damage to the condenser itself.

In the initial specifications for the condenser, consideration is given to many factors such as flow and heat load from the turbine exhaust, the economics of water temperature, fuel costs, turbine and plant cycle efficiencies, and condenser space requirements. The condenser manufacturer is required to meet these design parameters within the space limitations of the foundation opening. If the required steam and water dumps to the condenser are not known during the initial design stages but added later, they may encroach upon design margins and flow areas that were previously established. This may then be a contributing factor to the failure mechanisms discussed above. It is therefore important to include provisions for flows from the major steam and water dumps in the original specification for the condenser. Consideration should be given to abnormal as well as normal operations of steam and water dumps at various load conditions on the turbine. Examples would be boiler of turbine bypass systems, relief valve discharges, auxiliary steam turbine dumps, turbine auxiliary valve dumps, and feedwater heater alternate drains. In some cases, separate equipment such as flash tanks and/or separate condensing equipment should be considered for receiving these flows in order to safely dissipate the energy at a pressure somewhat higher than that in the condenser. Hot water drains from these flash tanks and/or separate condensing equipment would then be discharged by suitable valving to the main condenser. Atmospheric discharge of high volume, high energy flows that occur infrequently should also be considered, so as to reduce the duty on the condenser and to eliminate the need to handle these large flows at the low absolute pressures maintained in the condenser.

3.12.1 Recommended Location. More information regarding the location and design of condenser connections may be obtained from the Heat Exchange Institute (HEI). HEI Standards for Steam Surface Condensers, Eighth Edition (or later), Section 3.8 Connection Locations and Conditions.

(a) Flow Distribution — Turbine Exhaust. It is desirable to locate dumps where the steam and water jets will not impinge on turbine components or condenser tubes. Incoming piping should not interfere with the high flow regions of the turbine exhaust. In general, the regions of high flow from the turbine exhaust are the exhaust hood end walls, side walls, and corners. Regions of low flow are found in the central region of the exhaust hood below the turbine inner casing.

(b) Auxiliary Turbine Exhaust. The injection points of continuous steam flow to the condenser, such as auxiliary turbine exhausts, should be located where the incoming jet will not impinge at high velocity on turbine components or condenser tubes nor interfere with the high flow regions. A suggested location is in the region beneath heater shells or extraction piping, well below the turbine inner casing. The flow should be directed downward, as shown in Fig. 16. Care must be taken to orient the vanes of the grid to avoid an upward flow component. The connection should normally be located in the condenser dome. Alternately, this connection may be located on the condenser side wall if the steam lane is sufficiently wide to provide escape area. In this event, the tubes opposite the connections would be provided with appropriate deflection baffles to limit the impingement effect. A suggested method for sizing this connection would be to limit the exit velocity to:

$$V = (500 \times \nu)^{0.5}$$

where

ν = specific volume, ft^3/lb, at condenser pressure
V = velocity, ft/sec

For example, 2 in. HgA (6752 Pa) pressure would result in a velocity of 412 ft/sec (125 m/s).

Copyright ASME International
Provided by IHS under license with ASME
No reproduction or networking permitted without license from IHS

Not for Resale

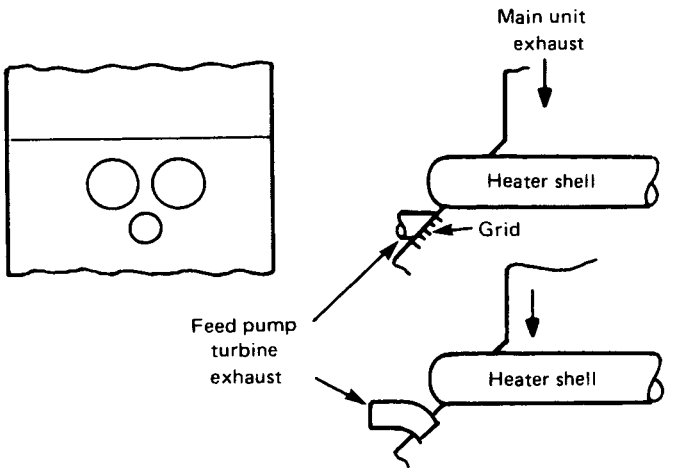

FIG. 16 ARRANGEMENT FOR FEED PUMP TURBINE EXHAUST

In SI Units:

$$V = 1.219\ (500 \times \nu)^{0.5}$$

where

V = m/s
ν = m^3/kg

(c) Continuous Heater Drains. These drains are normally associated with the low pressure extraction points of the turbine. They are often located above the top tubes of the condenser, due to the need for effective deaeration of low pressure heater drains or other low pressure water inlets which are potentially high in oxygen. However, available head frequently precludes this location. When this situation dictates, the drain discharge may be located in accordance with the condenser manufacturer's recommendation.

(d) Intermittent Steam Dumps. Intermittent dumps have the potential for introducing sudden temperature changes on components and, therefore, thermal distortions, creating large increases in exhaust pressure and interfering with normal exhaust flows. Their location and resulting steam jet should be considered carefully. The turbine manufacturer's preferred location for these dumps is between the lowest condenser tube and the hotwell level. Intermittent dumps include turbine and boiler bypass flows, relief valve discharges, flash task vents, and turbine auxiliary valve discharges. Because of the possible distortion of the turbine inner casing with its close clearances between rotating and stationary parts, care must be taken in the design of these discharges into the condenser. Excessive steam dumps for the given volume can cause the operational problems previously discussed. In general, when discharged into the dome, a minimum distance of 10 ft between the discharge and turbine exhaust connection is recommended. The discharges from these steam dumps should not impinge on the turbine or condenser tubes. The condenser manufacturer has limitations on the maximum amount of dumped steam he can accept in the dome and hotwell. If these limits are exceeded, then separate condenser equipment such as atmospheric discharges should be considered. Care must be taken to avoid localized overloading of the heat absorbing capacity of the condenser tubes, or the result may be convective flow up the sides of the condenser carrying water with it. Depending on enthalpy and quantity of steam, spray attemperation in the lines may be necessary. The attemperator design and location should be such as to achieve complete evaporation of the attemperating water before entering the condenser. The possibility of discharge flow being over-attemperated should be avoided to minimize erosion damage. It is better to under-attemperate and accept a higher temperature than to over-attemperate and introduce excessive water with the dump. The effects of temperature are slower acting and can be corrected by supplemental spray controls, while the effects of excessive water can cause immediate internal damage. Proper location of steam dumps in terms of physical elevation and direction of discharge will avoid direct or reflected impingement on the turbine

Copyright ASME International
Provided by IHS under license with ASME
No reproduction or networking permitted without license from IHS
Not for Resale

inner casing. In certain cases, it may be necessary to furnish deflection baffles and/or diffusers containing a large number of small holes to shorten the jet penetration length. In the case of multi-pressure condensers, large capacity dumps which could significantly increase condenser pressure should be arranged so the transient pressure in any zone is minimized (i.e., biased towards lower pressure zones).

(e) Intermittent Water Dumps. Lines that carry high pressure water (alternate heater drains, flash tank drains, condensate recirculation, etc.) should have their discharge restricted by perforated pipes and/or baffles to prevent fluid impingement on the turbine.

3.12.2 Recommended Energy Levels and Sizing Criteria. In addition to the proper location of steam and water dumps in the condenser, their design must also take into account the energy levels involved and the condenser internal structure in the vicinity of the dumps. Excessive energies and/or velocities in restrictive areas can cause internal damage and/or diversion of the dumps against the turbine inner casings, lightweight condenser tubes, etc.

In general, it is preferable to favor lower steam dump enthalpies at higher flows.

To minimize the likelihood of difficulty from steam dumps and flashing water dumps, the following parameters need careful consideration:

(a) steam dump and flashing water velocities inside the condenser shell, at a point sufficiently far enough away from the perforated pipe or baffle to ensure uniform velocity, if they are in excess of 500 ft/sec (152 m/s);

(b) enthalpies of entering steam dumps if they are in excess of 1190 Btu/lb (2.768×10^6 J/kg);

(c) steam dump pressures at the condenser connection if they are in excess of 250 psia (1.72×10^6 Pa).

4 OPERATING RECOMMENDATIONS

Because of the many variations in equipment, unit system designs, and different system grid requirements, operating recommendations provided here are based on generic requirements. Operating companies should develop and conduct a training program for each installation to guide their operators in handling normal start-up, shutdown, steady state, varying load conditions, and loss of steam generator fire, as well as trips and situations involving water induction. These instructions should cover the steps to take should there be any symptoms of water induction such as high level alarms, sharp drops in metal temperature, or shaking steam pipes. In addition, training should be tailored to each installation to the extent that special or unusual operating characteristics may make that unit or type of unit more susceptible to water induction (e.g., units that require extended condensate/feedwater system pressurization and operation for system cleanup or cooldown offer a greater potential for water induction). Damage can be minimized if prompt and decisive action is taken at the first warning of water induction into a turbine. An operator training review is recommended periodically to keep the specific instructions clear in the operator's minds.

4.1 Main Steam System

4.1.1 Prior to starting the unit, it is recommended that all drain lines on the main steam system, as well as before-seat drains on the turbine stop valves, be opened to permit a flow of steam from the boiler to warm the steam leads and stop valve bodies at the desired rate. The process of heating will aid in clearing the superheater of water. During warming, a close check should be maintained on all thermocouples sensing steam and metal temperatures in the main steam system. These drain valves should not be fully closed until the unit is initially loaded and temperatures indicate superheated steam conditions exist.

4.1.2 During start-up, all drains between the main steam stop valve and turbine casing should be open as recommended by the turbine manufacturer.

4.1.3 When a turbine is to be restarted shortly after a tripout from load, the operator must decide whether or not the main steam line drains need to be opened to eliminate water accumulations. Under certain conditions, opening of these drain valves will allow depressurization of the main steam system. This may produce quenching of the boiler superheater and main steam piping. Operating procedures should be finalized during the initial operation of the boiler and turbine that will balance the requirements of proper drainage against excessive depressurization.

4.2 Cold Reheat Piping

The cold reheat drain system is automatic as outlined in para. 3.4. Repeated high levels in the cold reheat drain pot is an indication of a problem, and an operator should investigate the causes of this condition and make the necessary corrections.

Copyright ASME International
Provided by IHS under license with ASME
No reproduction or networking permitted without license from IHS

Not for Resale

4.3 Reheat Attemperator

4.3.1 Reheat spray should not be used at any time when it is of minor or insignificant value in reducing final reheat temperatures (see para. 3.5.4).

4.3.2 Reheat spray should not be used, when the steam temperature entering the attemperator is at or below a minimum of 25°F (14°C) above saturation temperature. In many cases, higher temperature margins are possible. This will give greater protection without affecting final steam temperature control.

4.3.3 After a trip, operator initiation should be required to reset and reopen the reheat attemperator block valves. Both the turbine and the main fuel trip should be reset and the attemperator spray control valve must be closed before the block valve is permitted to be opened (see Fig. 5).

4.3.4 The control valve should be kept in the closed position until the block valve has reached the full open position. This is to prevent wire drawing of the block valve seat and subsequent leakage through the block valve.

4.4 Hot Reheat Piping

The power-operated drain valves provided in each of the hot reheat system drain lines (see para. 3.6) should be opened by the control room operator prior to admitting steam to the turbine. Control room indicating lights should be used to provide the verification of valve position. These valves should be left in the open position until the unit is synchronized and there is verification that a steady state condition exists of adequate superheat in the hot reheat. The drain valves should be opened again whenever the unit is to be taken off the line. The operator should open the drain valves if there is a condition existing where water could enter into the turbine.

4.5 Feedwater Heaters and Extraction System

4.5.1 Instruct the operators to investigate all high level alarms and isolate the source of water.

4.5.2 Do not operate a feedwater heater if some of the protective devices are known to be faulty, unless special provisions are made to assure equal protection.

4.5.3 If an alarm sounds and subsequent automatic controls are designed to isolate the source of water, the operator should follow up by actuating any required isolating and drain valves remotely, and then checking visually to be sure all valves are in the correct position.

4.5.4 If any heater is taken out of service, drain valves in the associated extraction lines must be opened, and the drain line from the drain valve checked, to be sure it is not plugged (see para. 3.7.5). When returning the heater to service, the operator should check that the heater shell pressure is lower than the corresponding turbine stage pressure before opening the extraction line shutoff valve.

4.5.5 Where the boiler start-up cycle pressurizes feedwater heaters, the shutoff valves between the turbine and the pressurized feedwater heaters should be interlocked closed during the start-up cycle to prevent any back flow from the heaters into the turbine. This is in addition to any possible check valve action. Once the pressure in the associated turbine stage is sufficient to prevent back flow from the feedwater heater, the feedwater heater shutoff valve may be opened and the heater placed into service. Proper care should be taken when placing these feedwater heaters in service to control the rate of temperature change on the feedwater heater tubes and in the feedwater line to the boiler.

4.5.6 If a feedwater heater has been removed from service automatically or by the operator, it may be necessary to reduce load and/or steam temperature in accordance with the turbine and boiler manufacturer's recommendations.

4.6 Turbine Steam Seal System

When the turbine is hot and it is necessary to transfer to any auxiliary source of gland seal steam, be sure that:

(a) temperature of the steam supplied to the gland is in accordance with the turbine manufacturer's recommendations;

(b) the supply piping from the auxiliary source to the turbine gland system is prewarmed so that steam is not condensed and injected into the gland system.

4.6.1 If water is detected in a steam pipe serving as a source of seal steam for the turbine gland system, turbine vibration and differential expansion are satisfactory, and there are no other signs of distress requiring that the unit be shut down, transfer either automatically or manually to another source of seal steam, then close the shutoff valve in the line routed to the source pipe containing water. Drain the water from the source pipe.

Copyright ASME International
Provided by IHS under license with ASME
No reproduction or networking permitted without license from IHS Not for Resale

4.6.2 Periodically check all continuous drains from the steam seal system to be sure that they are not plugged. A contact pyrometer, thermocouples, or other temperature sensors may be used for this check.

4.7 Boiler Feed Pump Turbine Steam Supply

4.7.1 Drains from pipes supplying steam to a BFP turbine should be operated in accordance with the BFP and main turbine manufacturer's recommendations. These drains should be opened automatically on a BFP turbine trip except that drains from main steam supply lines should follow the recommendations for drains from the main steam system (para. 4.1).

4.7.2 When a BFP turbine is out of service, check all block valves shown in Figs. 12 and 13 to be sure they are closed.

4.8 Main Turbine

4.8.1 If water enters the turbine while operating at rated speed or while carrying load, do not trip the unit if the vibration and differential expansion are satisfactory and there are no other signs of distress. Search out and isolate the source of water immediately. Operation in this manner minimizes local thermal distortion by (heating) action of the mass flow of steam through the turbine.

4.8.2 If water enters the turbine while operating below rated speed, shut down immediately and isolate the source of water since rotor bowing caused by water induction may be aggravated below rated speed.

4.8.3 Once the unit has been placed on turning gear because of possible water induction, never attempt to restart until the shaft eccentricity is within normal limits, the various turbine shell temperature differences are within the allowable limits stated by the manufacturer, and the source of water has been identified and corrected with the assurance that it will not repeat on a subsequent start.

4.8.4 If a unit has been shut down because of indications of water induction, a restart should not be attempted in a time period less than that recommended by the turbine manufacturer.

4.8.5 If the rotor is bowed, or the shell distorted so the turning gear is not capable of turning the rotor, periodic attempts (once per hour) should be made to get the unit on turning gear. Do not attempt to free a locked rotor by use of a crane or by the admission of steam to the turbine.

5 TESTING, INSPECTING, AND MAINTENANCE

All testing should include complete control loop tests of normal and redundant systems from the initiating signal to the action that the indicating signal is intended to perform.

5.1 Test — Once per Month

5.1.1 Test heater extreme high level controls, switches, alarms, and interlocks. This should be done in a manner that approximates as closely as possible the actual flooding of a heater without endangering the turbine or other station equipment and without tripping the unit. (The design of the feedwater heaters and extraction systems should embody features permitting such testing). Check all annunciators for alarm indications. Avoid bypassing of interlocking devices, but when this is necessary for testing critical water prevention equipment, make certain the equipment is restored to the original condition of operation.

5.1.2 Test the mechanical and electrical operation of all drain valves. Where applicable, operate the valves from the control room and determine that they open and close by observing control room indicating lights. At least once a year, this inspection should include verification that control room indication of valve position is working as intended by physically checking the actual valve movement.

5.1.3 Test mechanical operation of all power assisted check valves, including all solenoid valves, air filters, air supply, air sets, etc.

5.1.4 A visual check of the turbine supervisory instruments should be made at least once a month to ensure that instruments showing differential expansion, casing expansion, eccentricity, vibration, rotor position, and metal temperature are in working order.

Copyright ASME International
Provided by IHS under license with ASME
No reproduction or networking permitted without license from IHS

Not for Resale

5.2 Inspections — Every 3 Months

5.2.1 Inspect all drain lines by using contact pyrometers or thermocouples and determine by temperature difference whether or not the line is plugged.

5.2.2 Inspect all valve stem threads to make certain they are clean and lubricated and that there are no obstructions that would prevent their movement. Inspect to see that there has been no damage to the thread.

5.2.3 Inspect all traps and orifices in drain lines by using contact pyrometers or thermocouples to determine whether or not there is flow through the line.

5.3 Inspection and Maintenance During Planned Unit Outages

5.3.1 All valves essential to water induction prevention (such as attemperator spray valves, extraction shutoff and check valves, etc.) should be tested or inspected for tight shutoff, or an internal visual inspection made. This test should also include all interlocks and controls.

5.3.2 All level actuated drain valves should have their level actuated mechanisms tested to be sure they are functioning properly.

5.3.3 Clean drip pots, traps, and orifices for all drains.

5.3.4 Where the tests of para. 5.2.1 indicate inoperative drain lines, the drain valves should be disassembled and inspected internally to assure that they will operate properly.

6 CLOSURE

These recommendations by the Committee are not to be considered all inclusive as a means of eliminating water damage. Design, operating, and maintenance instructions must be tailored to suit specific conditions of each installation to provide reliable protection. The recommendations are not intended to relieve designers, operators, and manufacturers of the responsibility to continue their efforts to improve unit safety and reliability.

7 NOMENCLATURE

Check Valve 

Flow Indicator 

Flow Transmitter 

Level Switch 

Level Controller 

Modulating Control Valve 

Normally Closed Valve 

Normally Open Valve 

Open-Shut Power Driven Valve 

Orifice 

Position Switch 

Power Assisted Check Valve 

Power Operated Three Way Valve 

Pressure Controller 

Temperature Controller 

Copyright ASME International
Provided by IHS under license with ASME
No reproduction or networking permitted without license from IHS
Not for Resale

ASME STANDARDS OF INTEREST TO TDP-1 USERS

Power Piping B31.1-1995
Fuel Gas Piping B31.2-1968
Process Piping B31.3-1996
Pipeline Transportation Systems for Liquid Hydrocarbons and Other Liquids B31.4-1992
Refrigeration Piping B31.5-1992
Refrigeration Pipin B31.5-1992
Gas Transmission and Distribution Piping Systems B31.8-1995
Building Services Piping B31.9-1996
Welded and Seamless Wrought Steel Pipe B36.10-1996
Stainless Steel Pipe ..... B36.19-1985(R1994)
Gas Turbine Terminology ..... B133.1M-1983(R1997)
Basic Gas Turbine ..... B133.2-1977(R1997)
Procurement Standard for Gas Turbine Auxiliary Equipment ..... B133.3-1981(R1994)
Gas Turbine Control and Protection Systems ..... B133.4-1978(R1997)
Procurement Standard for Gas Turbine Electrical Equipment ..... B133.5-1978(R1997)
Procurement Standard for Gas Turbine Ratings and Performance ..... B133.6-1978(R1994)
Gas Turbine Fuels ..... B133.7M-1985(R1992)
Gas Turbine Installation Sound Emissions ..... B133.8-1977(R1989)
Measurement of Exhaust Emissions from Stationary Gas Turbine Engines B133.9-1994
Procurement Standard for Gas Turbine Information to be Supplied by User and Manufacturer ..... B133.10-1981(R1994)
Procurement Standard for Gas Turbine Preparation for Shipping and Installation ..... B133.11-1982(R1994)
Procurement Standard for Gas Turbine Maintenance and Safety ..... B133.12-1981(R1994)
Procurement Standard for Gas Turbine Marina Applications ..... B133.16-1978(R1997)

See also the following Performance Test Codes: PTC 4.1-1964(R1991); PTC 6-1996; PTC 20.2-1965(R1986); PTC 32.1-1969(R1992); and PTC 39.1-1980(R1991).

The ASME Publications Catalog shows a complete list of all the Standards published by the Society. For a complimentary catalog, or the latest information about our publications, call 1-800-THE-ASME (1-800-843-2763).

Copyright ASME International
Provided by IHS under license with ASME
No reproduction or networking permitted without license from IHS
Not for Resale

ASME Services

ASME is committed to developing and delivering technical information. At ASME's Information Central, we make every effort to answer your questions and expedite your orders. Our representatives are ready to assist you in the following areas:

ASME Press
Codes & Standards
Credit Card Orders
IMechE Publications
Meetings & Conferences
Member Dues Status
Member Services & Benefits
Other ASME Programs
Payment Inquiries
Professional Development
Short Courses
Publications
Public Information
Self-Study Courses
Shipping Information
Subscriptions/Journals/Magazines
Symposia Volumes
Technical Papers

How can you reach us? It's easier than ever!

There are four options for making inquiries* or placing orders. Simply mail, phone, fax, or E-mail us and an Information Central representative will handle your request.

Mail
ASME
22 Law Drive, Box 2900
Fairfield, New Jersey
07007-2900

Call Toll Free
US & Canada: 800-THE-ASME
(800-843-2763)
Mexico: 95-800-THE-ASME
(95-800-843-2763)
Universal: 973-882-1167

Fax-24 hours
973-882-1717
973-882-5155

E-Mail-24 hours
Infocentral
@asme.org

* Information Central staff are not permitted to answer inquiries about the technical content of this code or standard. Information as to whether or not technical inquiries are issued to this code or standard is shown on the copyright page. All technical inquiries must be submitted in writing to the staff secretary. Additional procedures for inquiries may be listed within.

Copyright ASME International
Provided by IHS under license with ASME
No reproduction or networking permitted without license from IHS
Not for Resale

ISBN 0-7918-2539-6

K06698

K0669

Copyright ASME International
Provided by IHS under license with ASME
No reproduction or networking permitted without license from IHS

Not for Resale